## 3. VCO SHEET ASSEMBLY (VCO-1)

### 3-1. PARTS LAYOUT

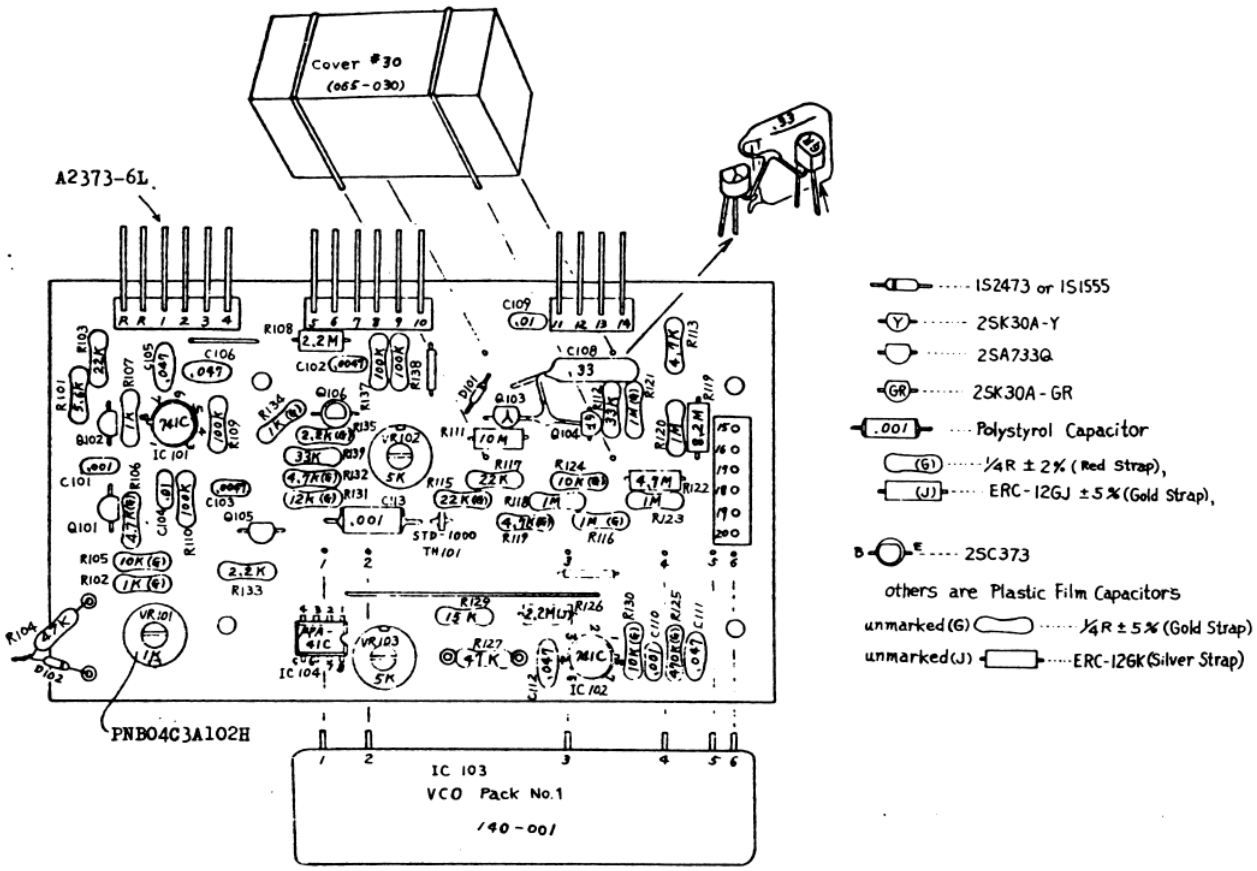


### 3-2. CIRCUIT DIAGRAM (VCO-1)

CONDITION : ALL tablets are in OFF position.
RESONANCE is in minimum position.
Others are in maximum position.
Pitch Control is at "0" position.

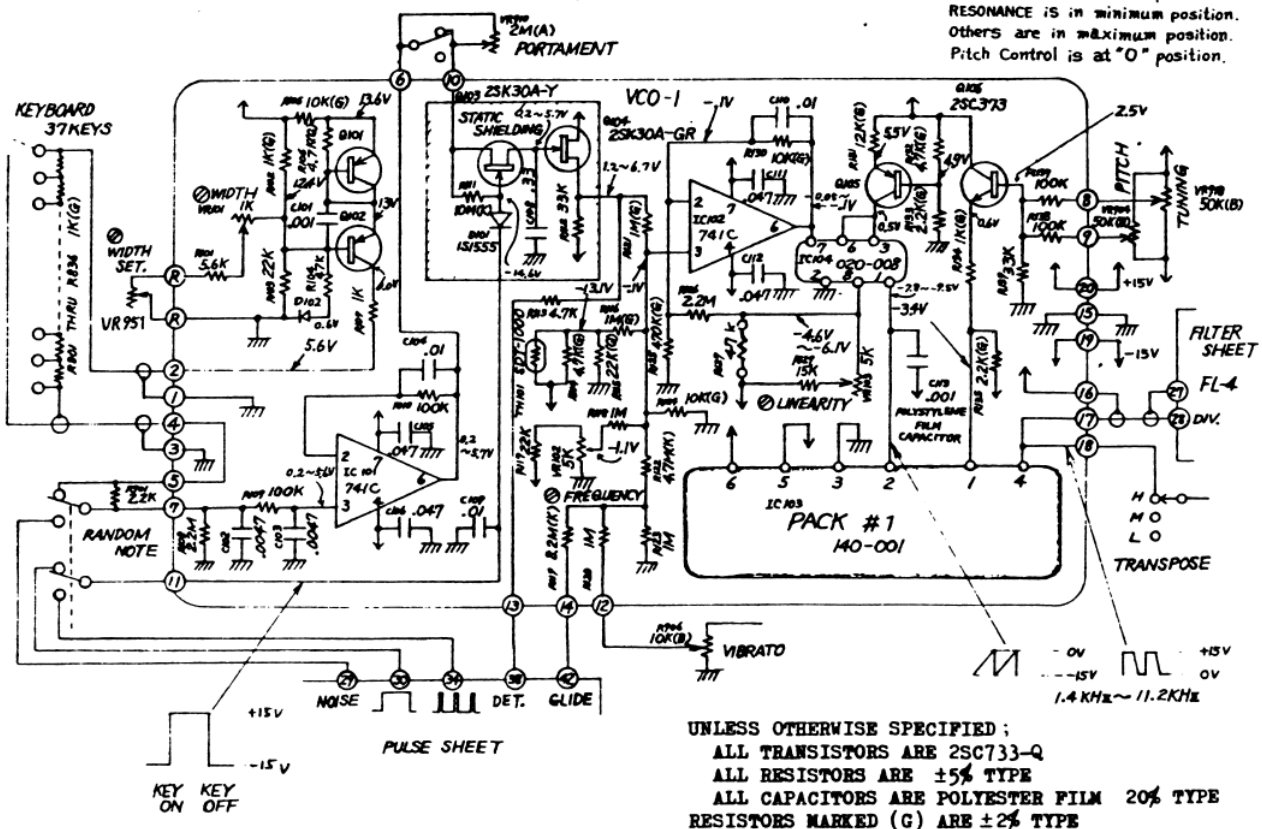


UNLESS OTHERWISE SPECIFIED;
ALL TRANSISTORS ARE 2SC733-Q
ALL RESISTORS ARE ±5% TYPE
ALL CAPACITORS ARE POLYESTER FILM 20% TYPE
RESISTORS MARKED (G) ARE ±2% TYPE
RESISTORS MARKED (K) ARE ±10% TYPE

## 4. VCF SHEET ASSEMBLY (VCF-1)

### 4-1. PARTS LAYOUT

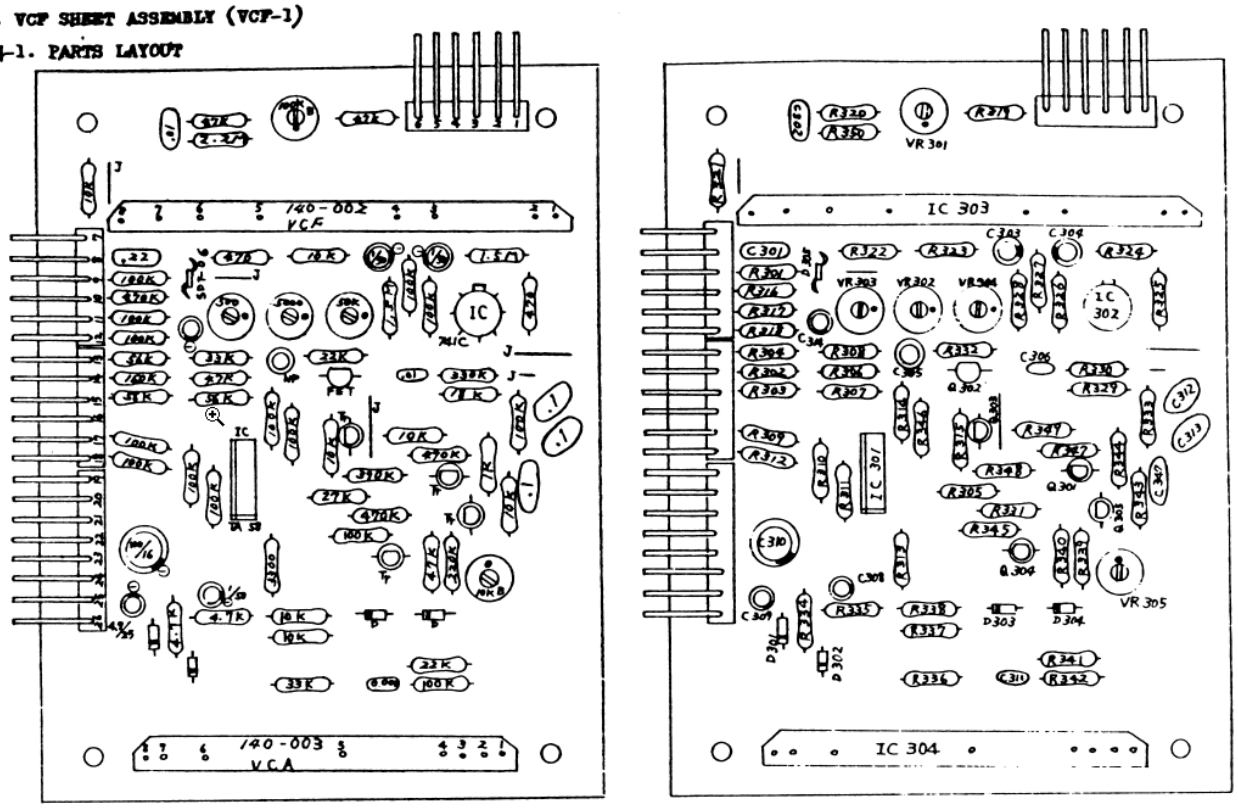


FET : 2SK-30AD  D : 1S-1555 or 1S-2473
Tr : 2SC-828R or 2SC-373

NP : NON polar Electrolytic Capacitor

### 4-2. CIRCUIT DIAGRAM (VCF-1)

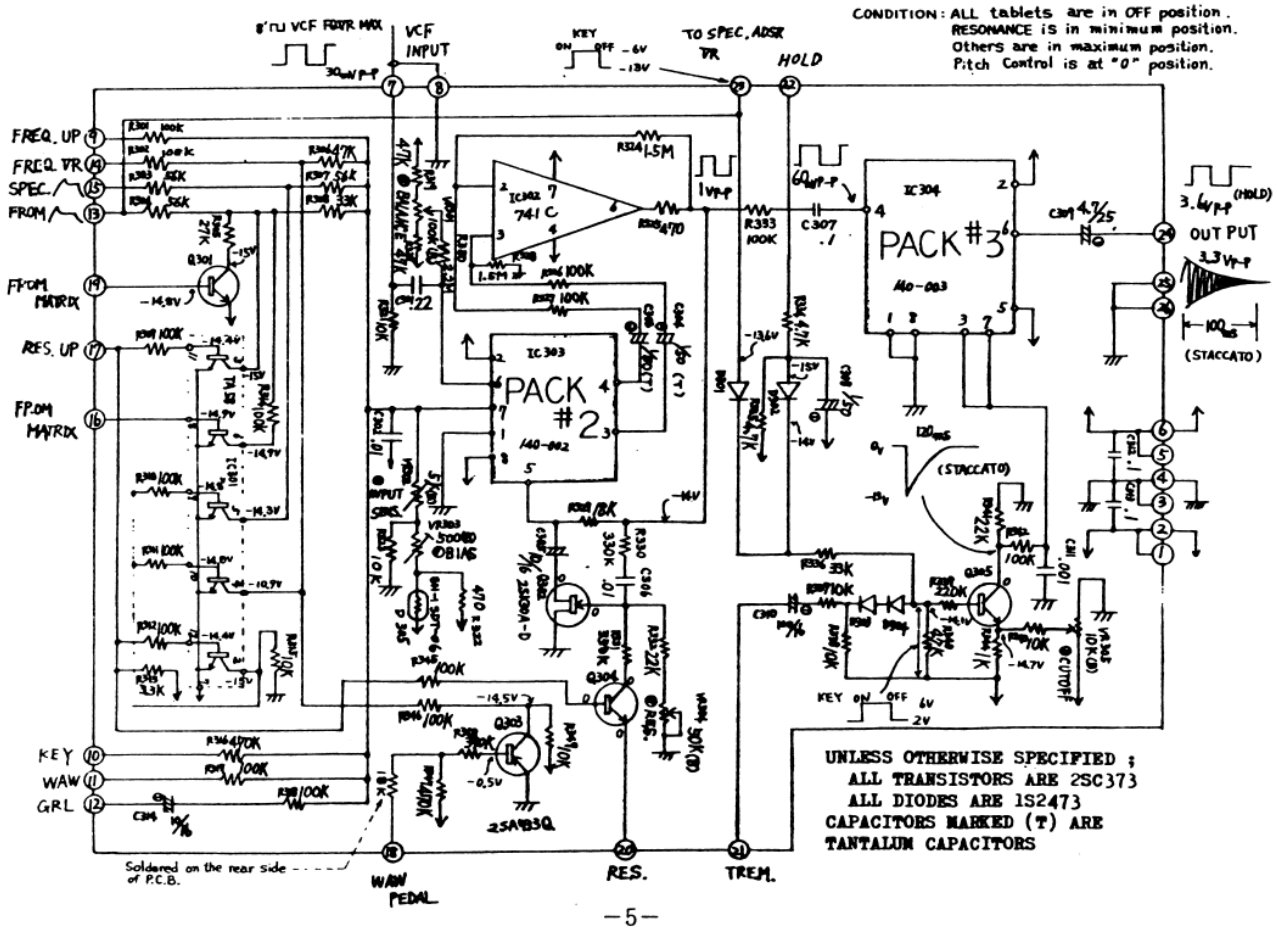

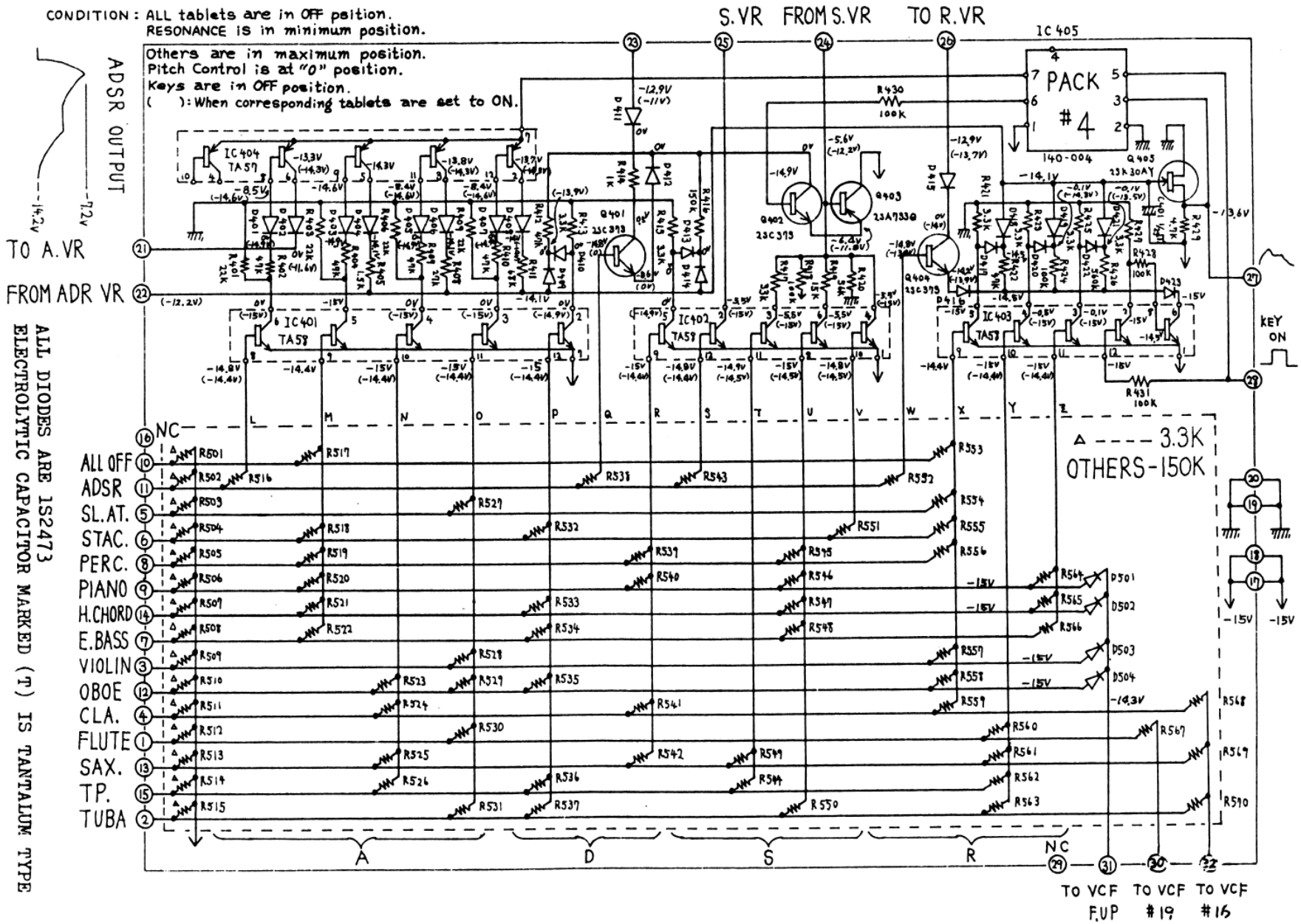


ALL DIODES ARE 1S2473
ELECTROLYTIC CAPACITOR MARKED (T) IS TANTALUM TYPE

6. FILTER SHEET ASSEMBLY (FL-4)

6-1. PARTS LAYOUT

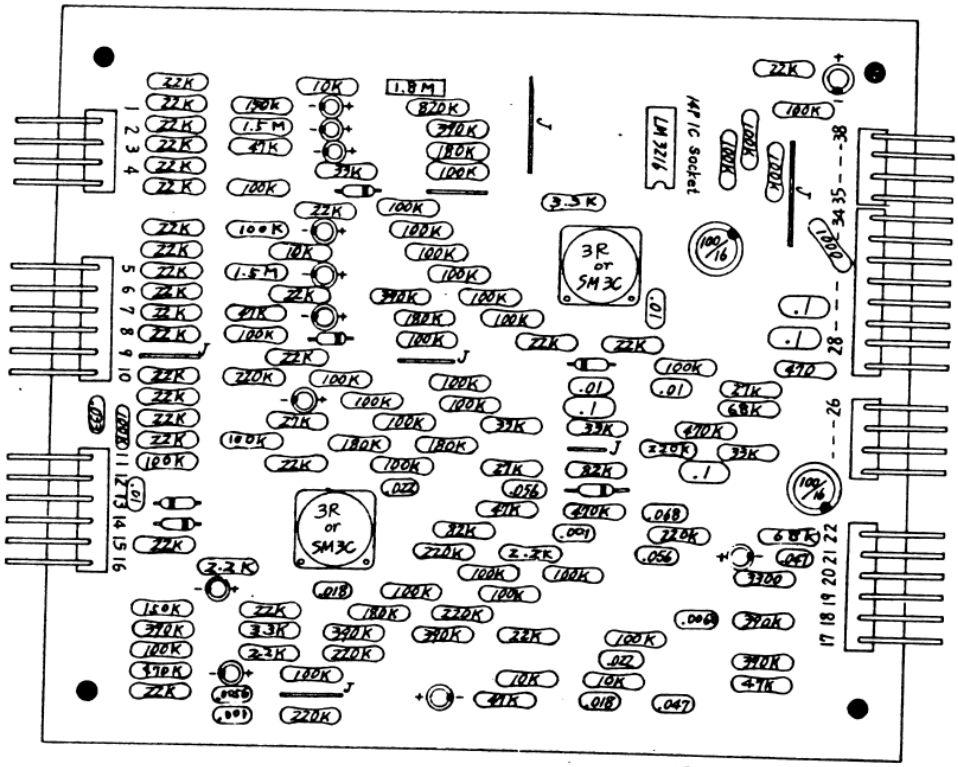


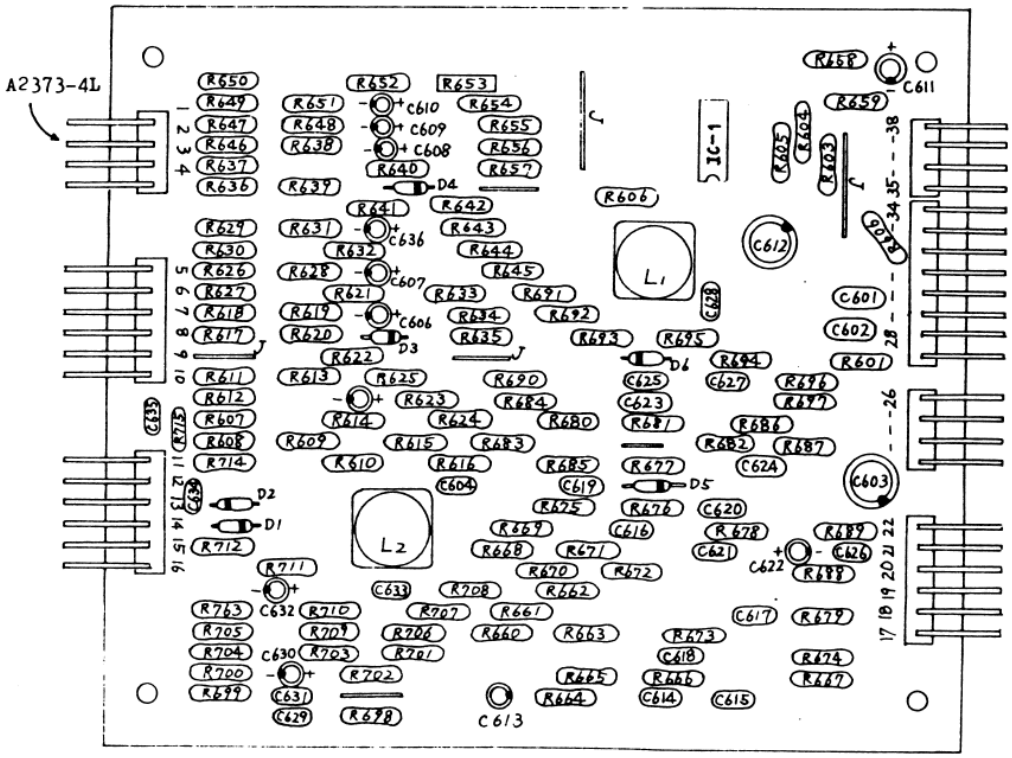

6-2. CIRCUIT DIAGRAM (FL-4)

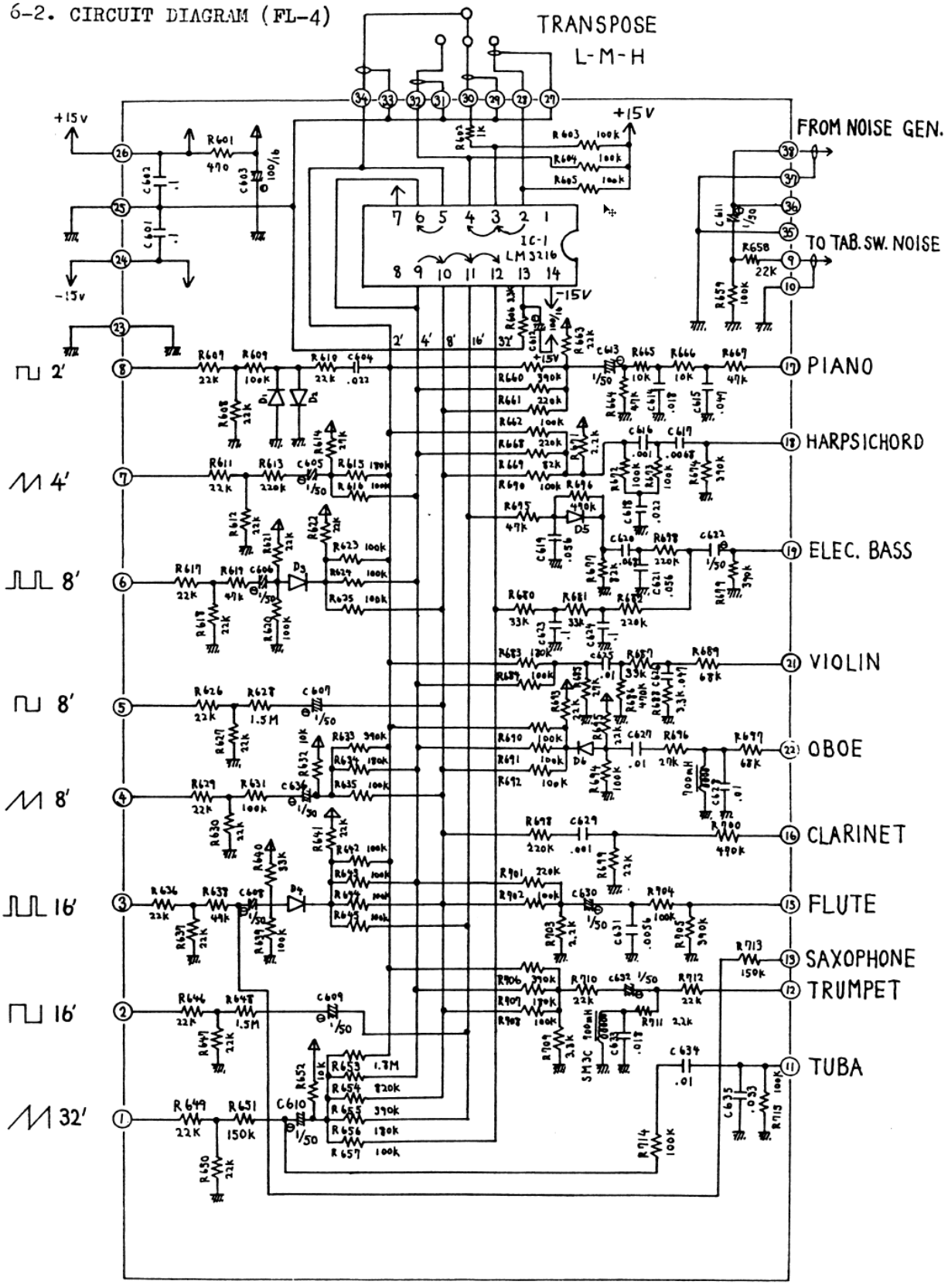


UNLESS OTHERWISE SPECIFIED :

ALL RESISTORS ARE ±10% TYPE, ALL DIODES ARE 1S2473
ALL CAPACITORS ARE POLYESTER FILM ±20% TYPE

7. PULSE SHEET ASSEMBLY (PL-1)

7-1. PARTS LAYOUT

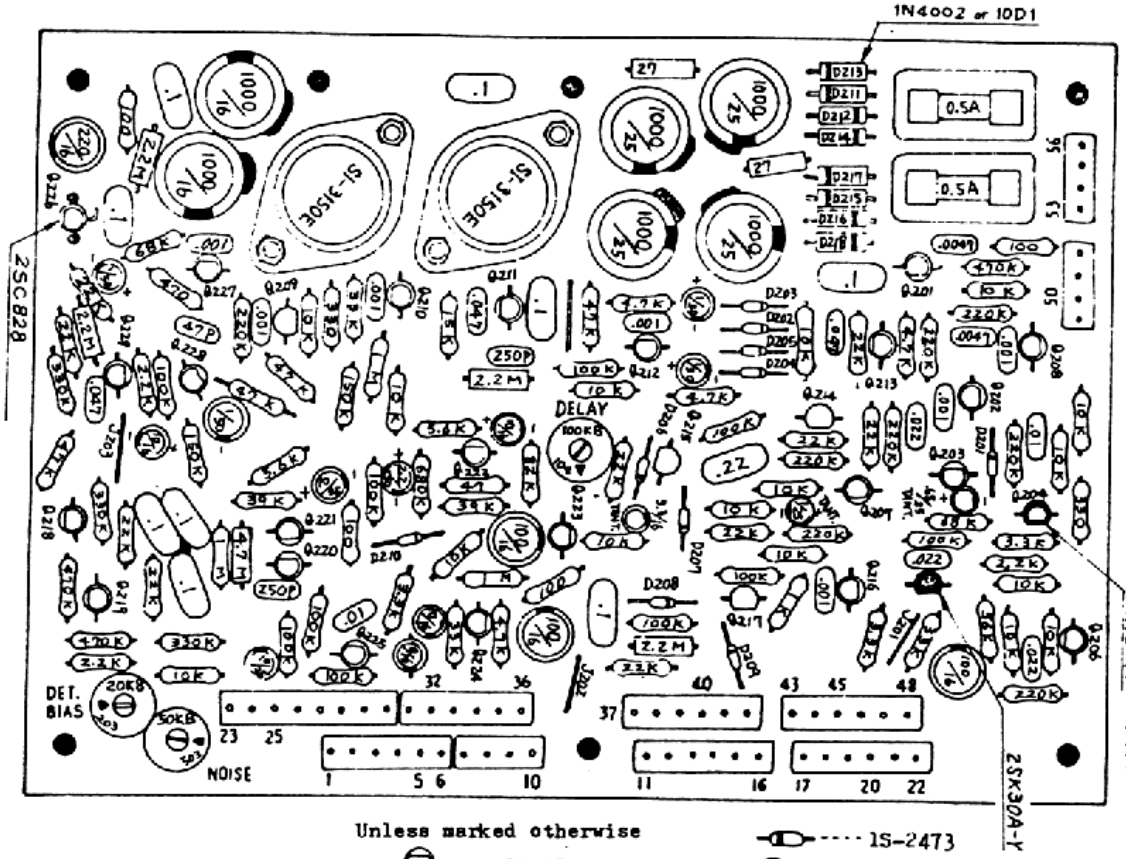


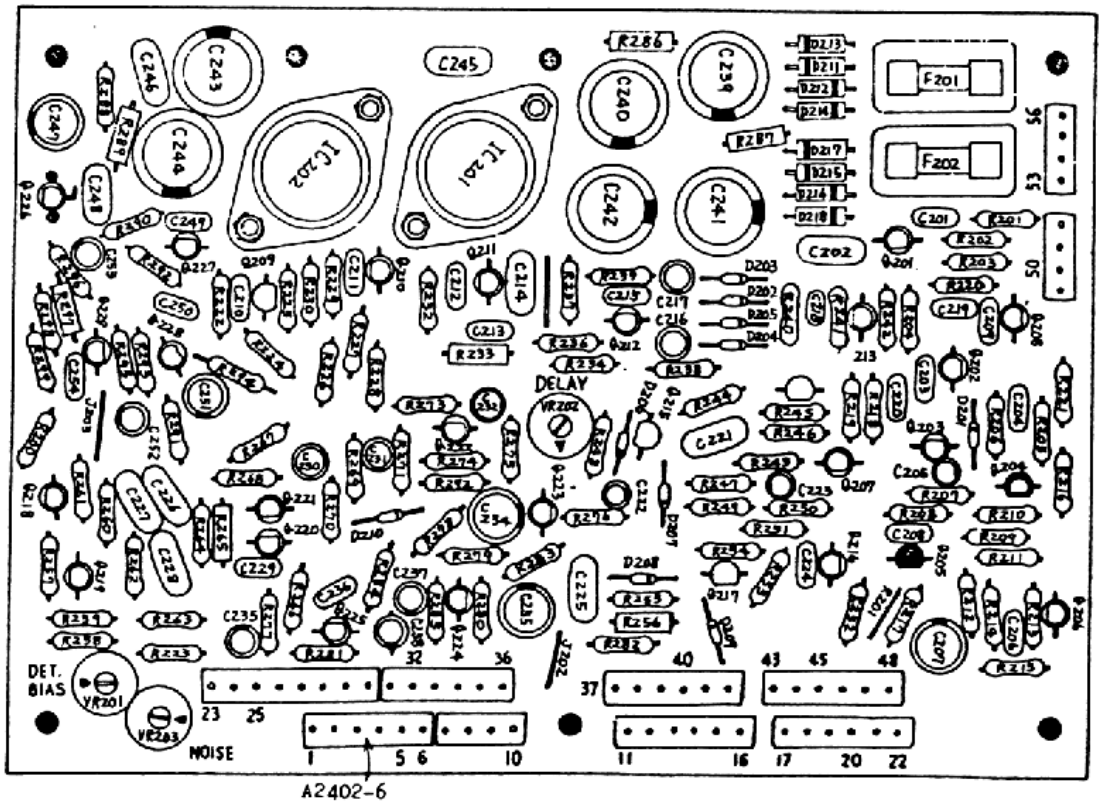

## 7-2. CIRCUIT DIAGRAM (PL-1)

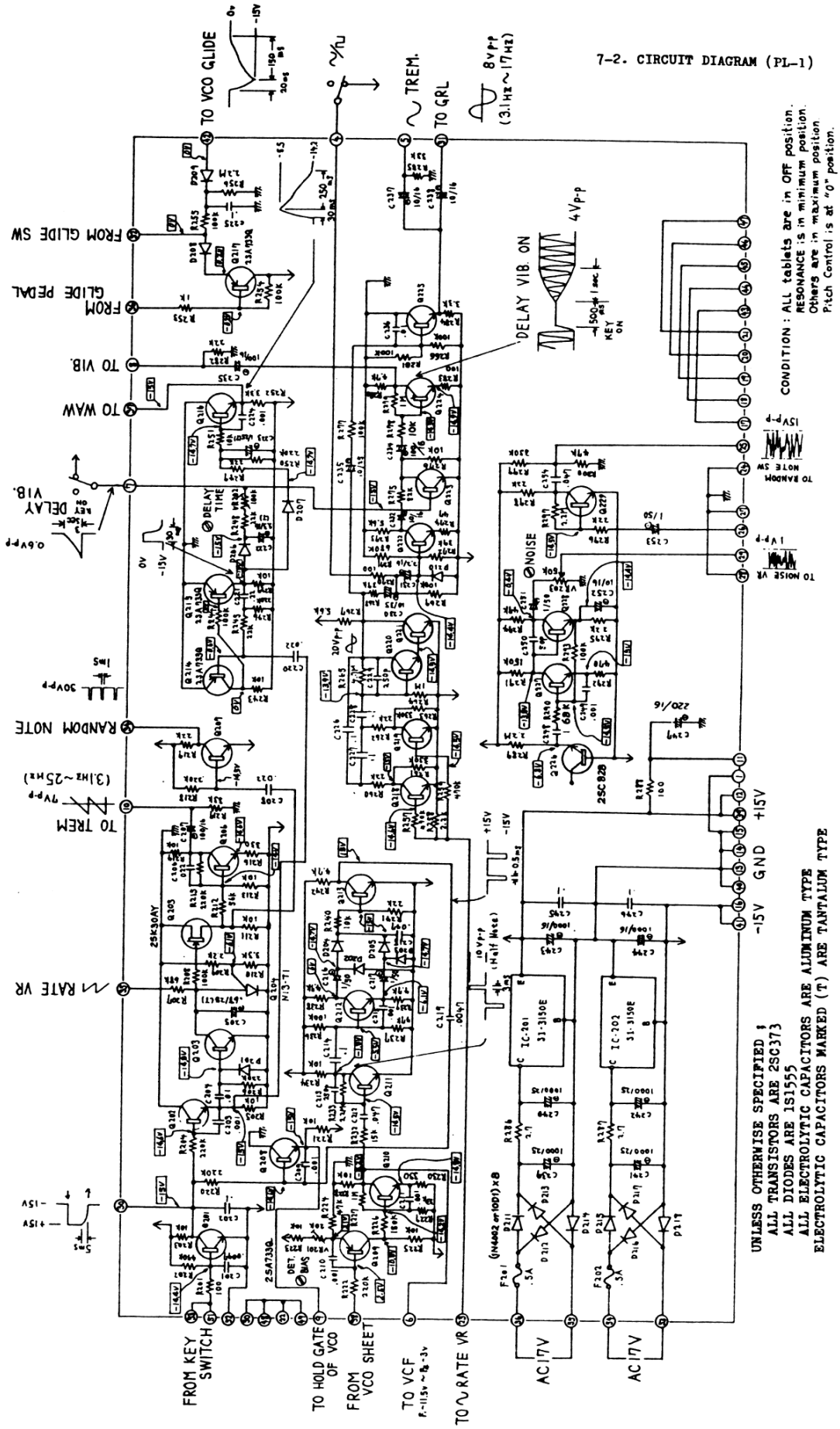

## 8-1. PACK No.1

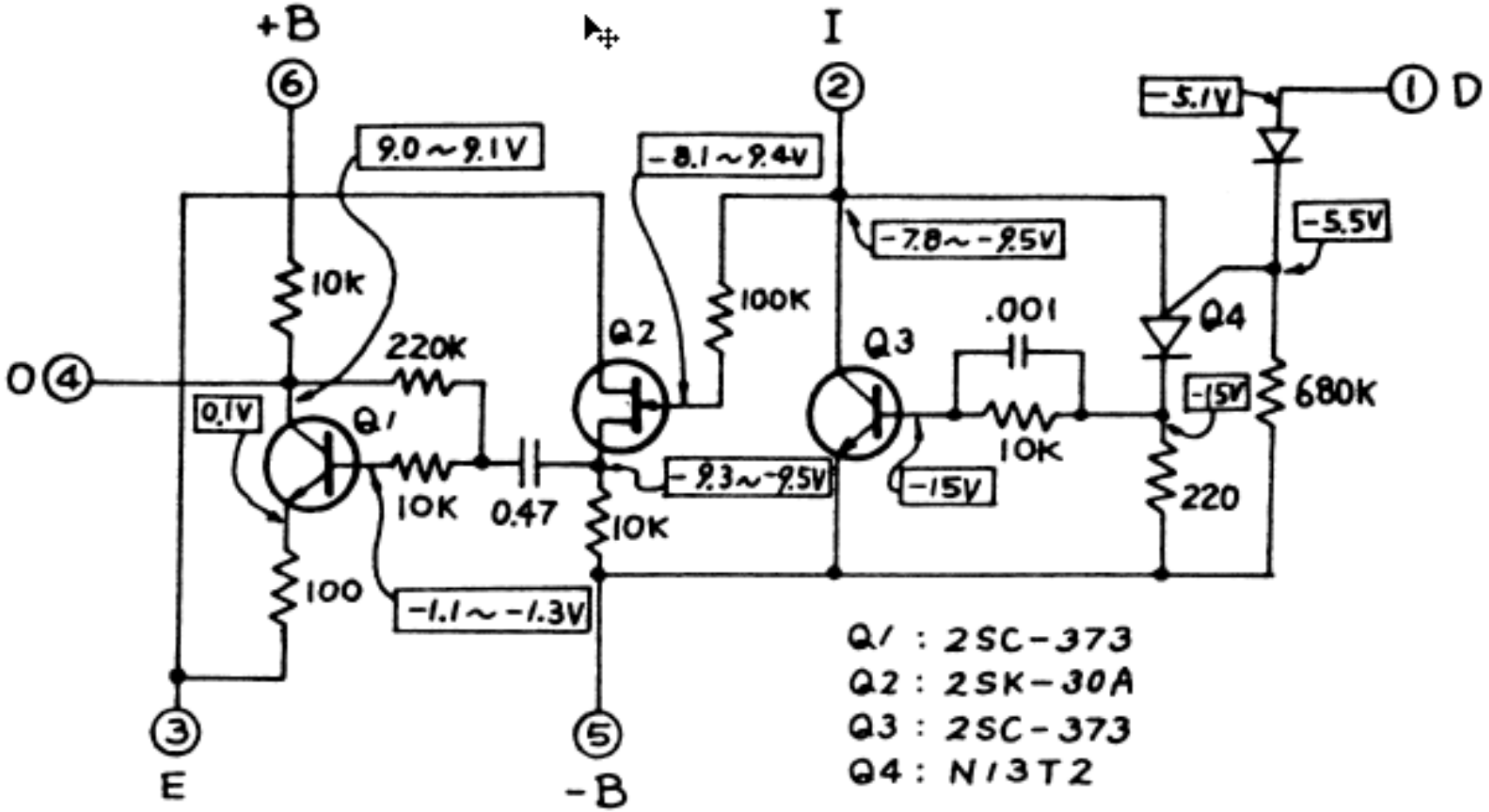
+B
6
I
2
1 D
-5.1V
9.0~9.1V
-8.1~9.4V
-7.8~-9.5V
-5.5V
10K
100K
.001
Q4
220K
Q2
Q3
O 4
0.1V
Q1
-15V
680K
10K
10K
0.47
-9.3~-9.5V
-15V
220
10K
100
-1.1~-1.3V
3
E
5
-B
Q1 : 2SC-373
Q2 : 2SK-30A
Q3 : 2SC-373
Q4 : N13T2

## 8-2. PACK No.2

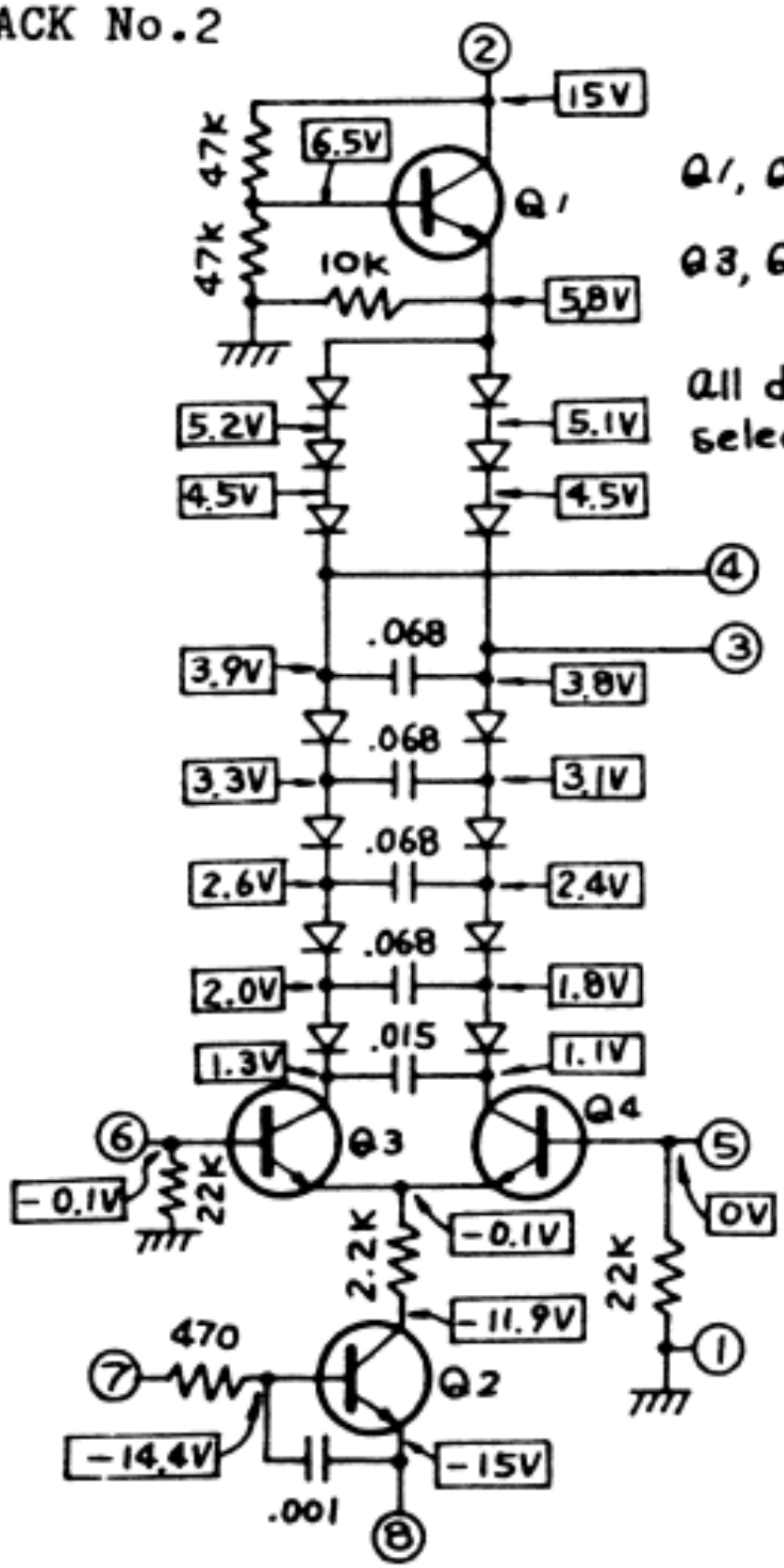


Q1, Q2 : 2SC-373

Q3, Q4 : 2SC-1000GY (Selected)

All diodes are selected.

## 8-3. PACK No.3

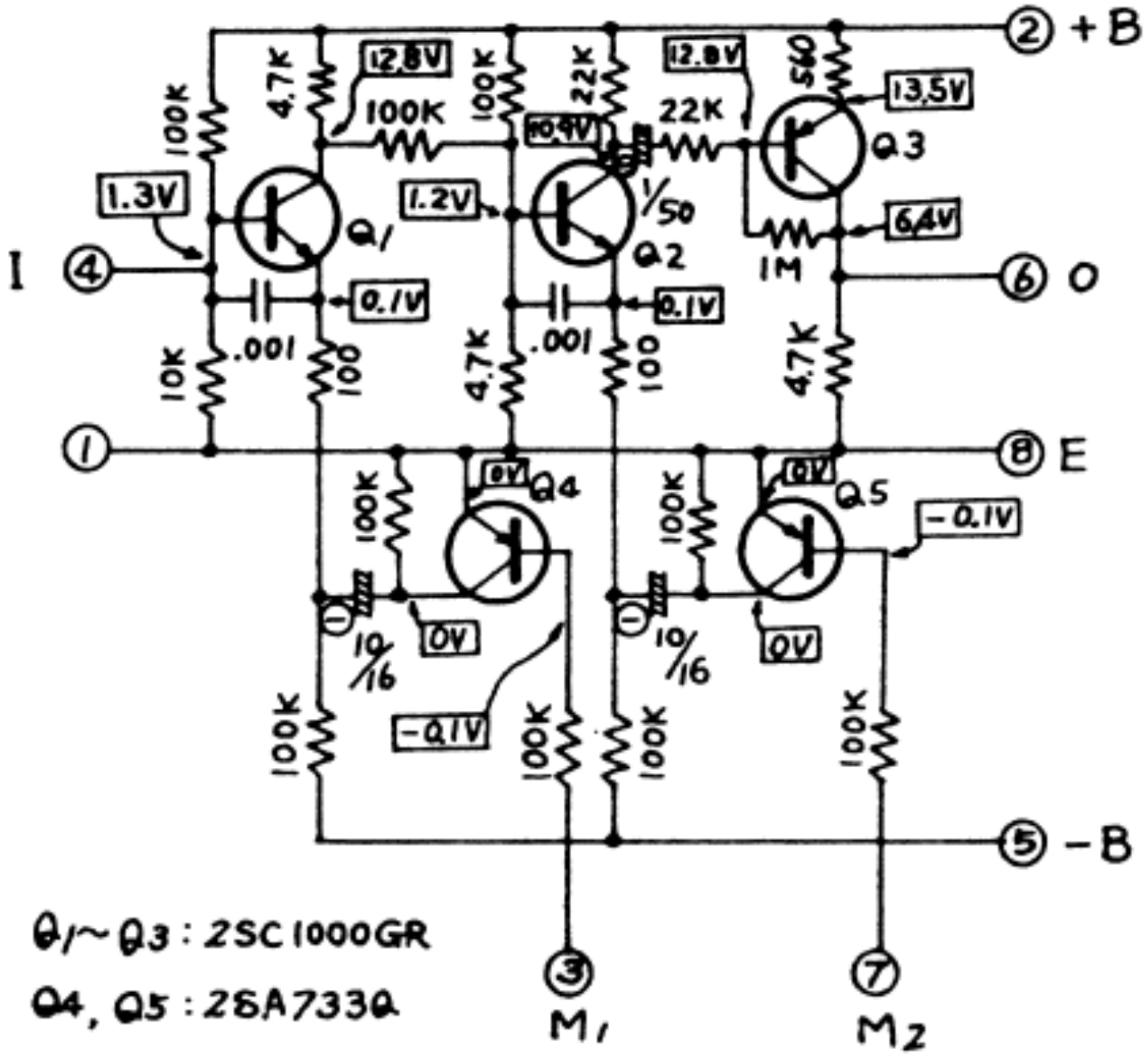


Q1~Q3 : 2SC1000GR

Q4, Q5 : 2SA733Q

## 3-4. PACK No.4

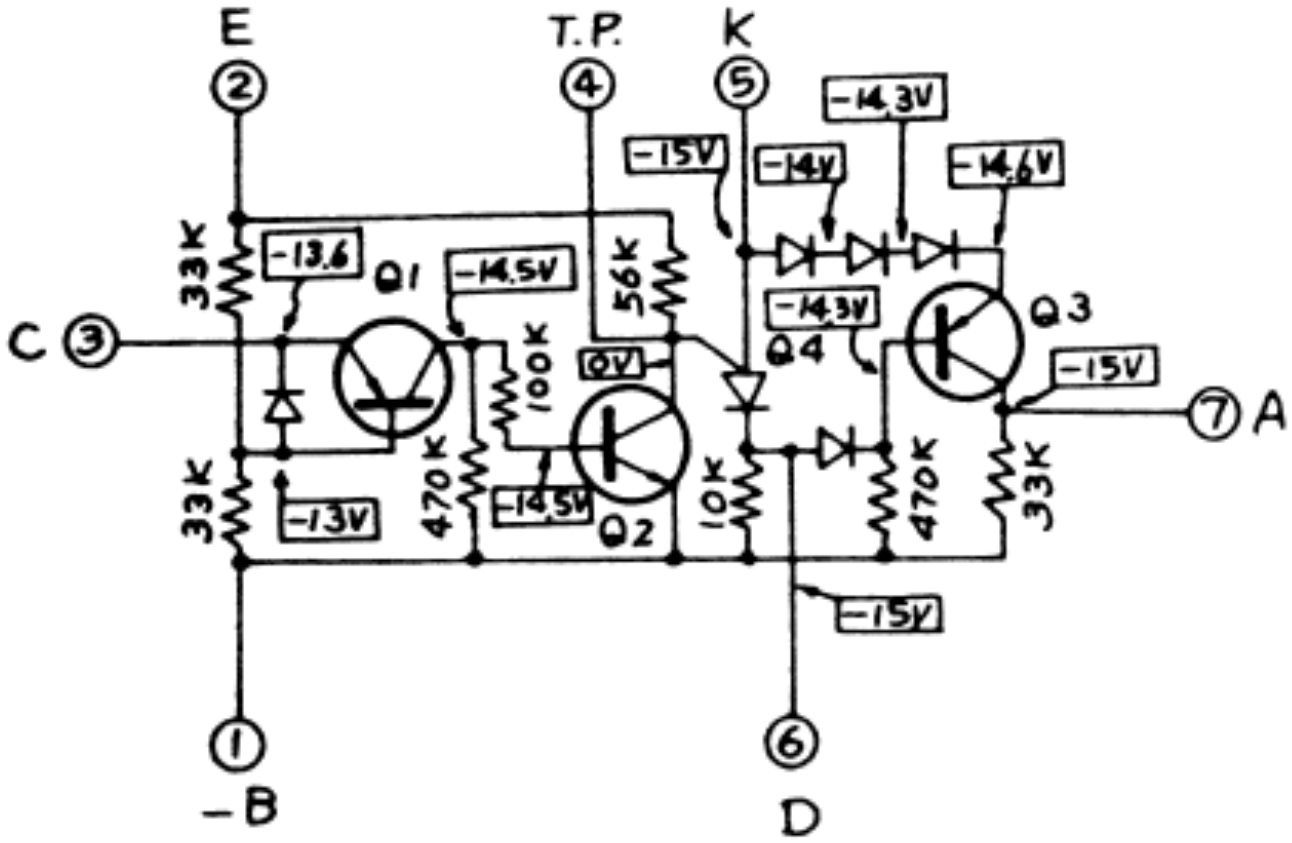


Q1, Q3 : 2SA733Q
Q2 : 2SC373
Q4 : N13T1

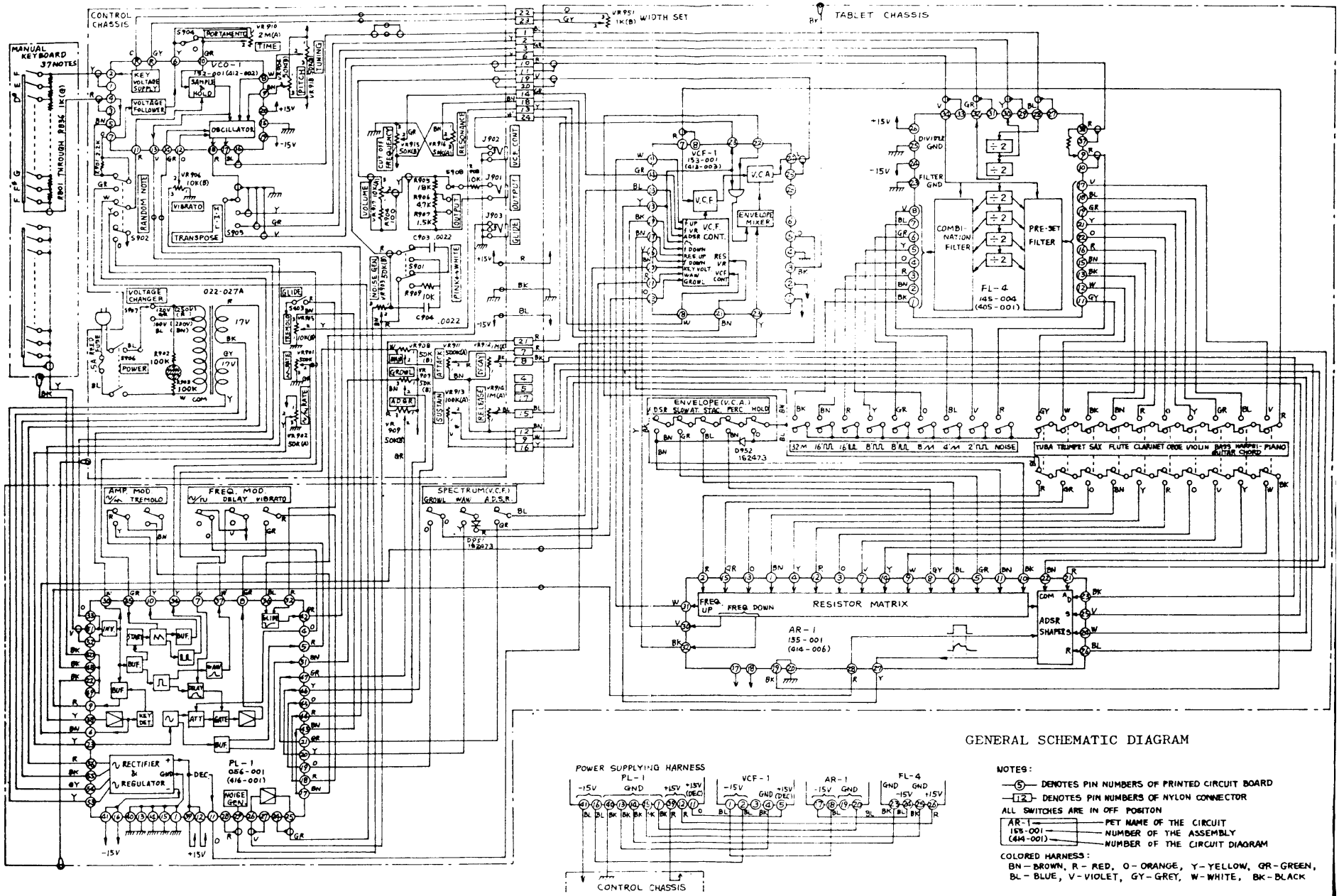


GENERAL SCHEMATIC DIAGRAM

NOTES:

—(5)— DENOTES PIN NUMBERS OF PRINTED CIRCUIT BOARD

—[12]— DENOTES PIN NUMBERS OF NYLON CONNECTOR

ALL SWITCHES ARE IN OFF POSITON

AR-1 — PET NAME OF THE CIRCUIT
155-001 — NUMBER OF THE ASSEMBLY
(414-001) — NUMBER OF THE CIRCUIT DIAGRAM

COLORED HARNESS:
BN – BROWN, R – RED, O – ORANGE, Y – YELLOW, GR – GREEN, BL – BLUE, V – VIOLET, GY – GREY, W – WHITE, BK – BLACK