G-707 SERVICE NOTES *First Edition*

Model G-707SV S/No 4736467

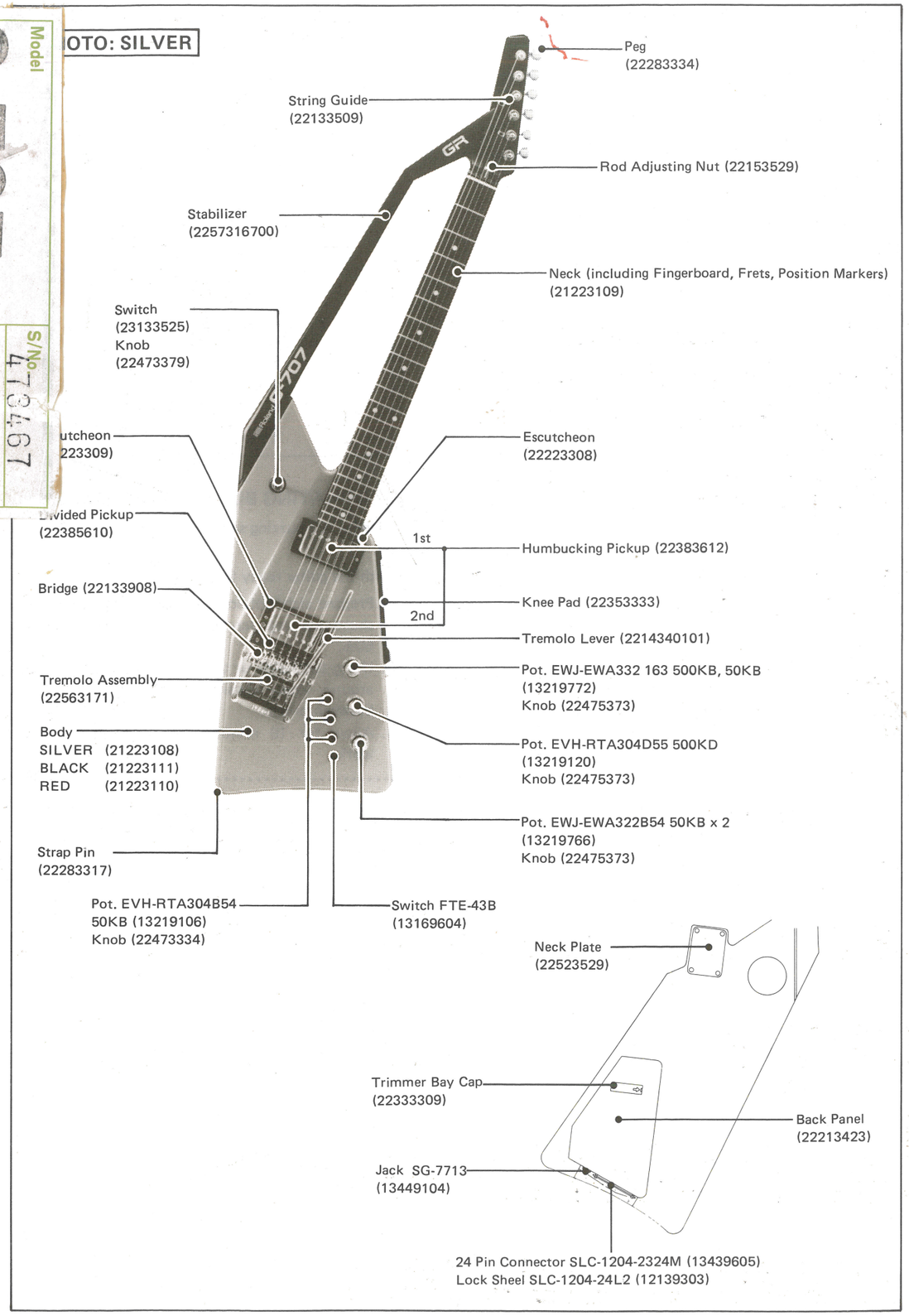

PARTS LIST

PICKUP

22385610	Divided
22383612	Humbucking

TREMOLO UNIT

22563171	Tremolo Ass'y (including the following two subassemblies)
22133323	Rolling Tailpiece
2235333202	Base
2214340100	Tremolo Lever
22133908	Bridge Ass'y

PCB ASSEMBLY

7921702002	Preamp Board (pcb 2291385303)

POTENTIOMETER

13219120	EVH-RTA304D55 500KD GUITAR TONE
13219106	EVH-RTA304B54 50KB COF, EDIT (RESONANCE), LFO (VIBRATO DEPTH)
13219772	EWJ-EWA322 163 500KB,50KB MASTER VOLUME
13299190	H0615C119-47KB trimmer
13219766	EWJ-EWA322B54 50KBx2 BALANCE

IC

15189136	M5218L
15159104T1	TC4011BP

DIODE

15019103	1S-2473

SWITCH

13169604	FTE-43B MODE
23133525	toggle GUITAR PICKUP SELECTOR

JACK, CONNECTOR

13439605	SLC-1204-2324M connector
12139303	SLC-1204-24L2 Lock Shell
13449104	SG-7713 jack

KNOB

22475373	clear
22473334	
22473379	toggle Switch

HEAD

22283334	Peg
22133509	String Guide
22153101	String Guide Post
22153529	Rod Adjusting Nut

BODY

21223108	SILVER
21223111	BLACK
21223110	RED

NECK (including Fingerboard, Frets, Position Markers)

21223109	

STABILIZER

2257316700	

LEFT HANDER GUITAR PARTS

21223112	Body
21223113	Neck (including Fingerboard, Frets and Position Markers)
22573190	Stabilizer
22213443	Back Panel
22563178	Tremolo Block Ass'y (including the following parts)
22353335	Base
22133326	Rolling Tailpiece
22173158	Leaf Spring
22283316	Peg
7922000000	Preamp Board (pcb 22923152)
22143403	Tremolo Lever

OTHERS

22910167	Flexible pcb
22223308	Escutcheon
22223309	Escutcheon
22663107	Sheet VOLUME (SILVER, RED version)
22663109	Sheet VOLUME (BLACK version)
22353333	Knee Pad
2216352800	Spacer
22523529	Neck Plate
22213423	Back Panel
22243528	Switch Cover
22333309	Trimmer Cap
22283317	Strap Pin

CHECKING AND ADJUSTING

Before checking and adjusting a given guitar controller, first always tune the guitar to playing pitch with a full set of strings will be used on the guitar.
Check the guitar in the order described below and adjust as necessary.

STRING HEIGHT

1. NECK

1-1. With a string pressed at the 1st and the 18th frets check the distance between the 8th fret top and bottom of the string: it must be 0.1–0.3mm (0.004 – 0.012 in).

1-2. Adjust the truss rod as necessary.

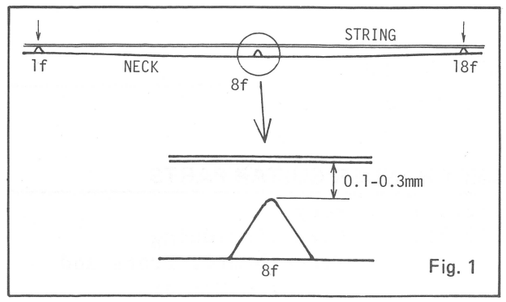

Fig. 1

2. BRIDGE

2-1. With all strings open measure the distance between bottom of the 1st string and the top of the 14th fret. It must be 1.5mm (1/16 in).

2-2. Also check for the 6th string in the same manner: it must be 2.0mm (0.08 in).

2-3. If not, adjust the height of the bridge as below.

2-4. Loosen screws B (not found on early products). Then turn screws A with a hex wrench for the specified clearances.

2-5. If the string comes in touch with a pickup(s), lower the pickup.

2-6. Tighten screws B.

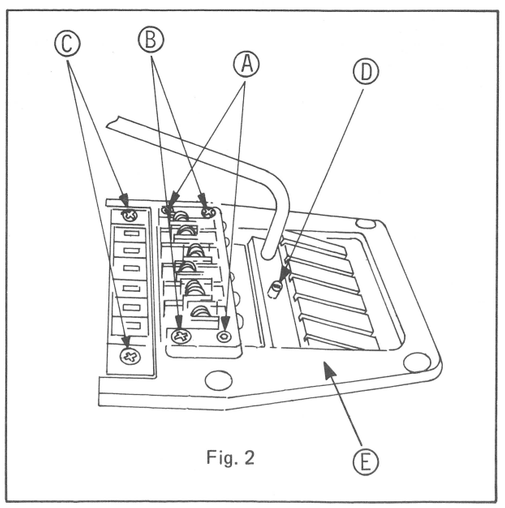

Fig. 2

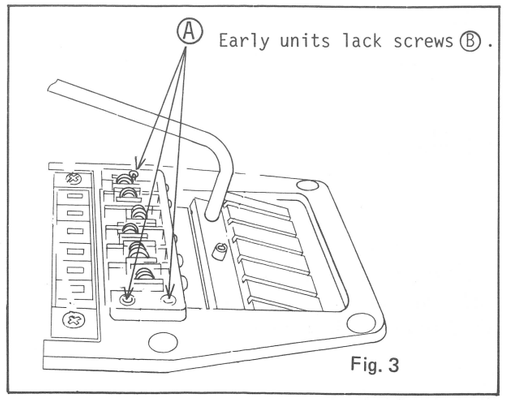

Fig. 3

3. DIVIDED PICKUP

At least three points should have the specified clearance above the pickup head.
However, if all the points cannot meet the values, priority is given to the closest one to allow for 0.5mm minimum with sacrification of the others which will have the chance of being comensated for in the later adjustment (PICKUP SENSITIVITY).

3-1. With the all strings pressed at the 22nd fret, first adjust the pickup height to obtain the distances shown in Fig. 4 by turning screws C.

3-2. Check the other strings for height from the corresponding head. If there is a gap which is less than 0.5 mm, lower the pickup at either side.

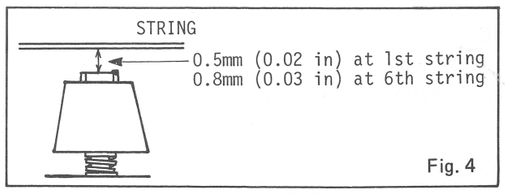

Fig. 4

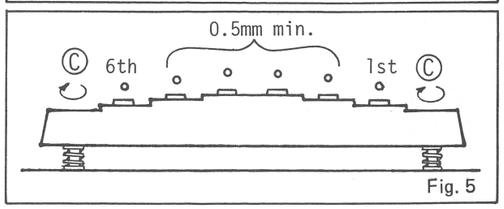

Fig. 5

4. HUM-BUCKING PICKUP

4-1. With the 1st string pressed at the 22nd fret, check the distance between the pickup top and the bottom of 1st string. It must be 2.5mm (0.1 in).

4-2. In the same manner check the 6th string for the clearance. It must be 3.0mm (0.12 in).

4-3. Adjust the height of the pickup for the above clearances.

No checks are required for the 3rd to 5th strings.

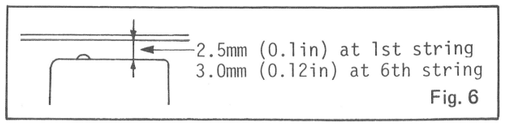

Fig. 6

DIVIDED PICKUP SENSITIVITY

Sensitivity of the divided pickup should be adjusted whenever it is a replacement or seems to have been affected by:

* Changing or adjusting of Neck, Fingerboard, Bridge or Truss rod, etc.
* Missetting of sensitivity itself.

CAUTION This adjustment must be done only after completion of previously mentioned adjustments and tuning of both G-707 and GR-700..

1. Expose the trimmer bay by removing trimmer cap from the rear panel of G-707.
2. Set the trimmers to the center position.
3. Set G-707 MODE to Ⅲ.
4. Connect G-707 to the GR-700 and select a preset which reproduces a fast attack with a steady pitch. Press DYNAMICS VCA.
5. Give the hardest pluck which may be given in normal playing and adjust each trimmer for the maximum volume yet having firm pitch.
6. Listen individual strings for detecting the softest one and adjust the remaining with the corresponding trimmiers for even outputs.

TREMOLO ARM

CAUTION Tremolo arm must be adjusted with a full set of strings to be used installed on the guitar and tuned to playing pitch.

1. Adjust worm screw D so that the edge F of rolling tailpiece is flush with top surface E of the base. (Also see Fig. 2.)

* Setting the edge above the base will result in string breakage during tremolo play, if excessively stroked.

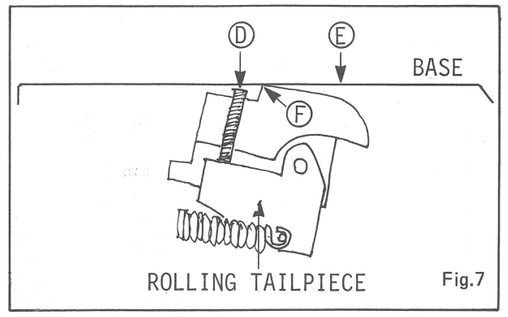

Fig.7

ELIMINATING BUZZ AT BRIDGE SADDLE

If there is a buzzing saddle at the bridge, it can be silenced.

With the guitar ready for playing;

1. Prepare alchohol soluble adhesive of a kind used for shake-proofing screws, nut, etc. Thin adhesive to 50%.
2. Using toothpick or the like, apply a drop of adhesive around lower outside of the saddle to fill void between bridge.
3. Allow for 10 minutes for curing prior to further work.

Location	Part Number	Description
1	21223108	Guitar Body
2	21223109	Neck, Fingerboard, Frets and Position Markers
3	22573167	Stabilizer
4		
5		
6		
7		
8		
9		
10		
11	22283334	Peg
12		Peg Nut
13		Peg Washer
14	22133509	String Guide
15	22153101	String Guide Post
16	22153529	Rod Adjusting Nut
17	22163528	Spacer
18	22353333	Knee Pad
19	22475373	Knob
20	22473334	Knob
21	22473379	Knob
22	22663107	Volume Sheet (SILV, RED)
	22663109	Volume Sheet (BLK)
23	22523529	Neck Plate
24	12139303	Lock Shell SLC-1240-24L2

Location	Part Number	Description
25	22243528	Switch Cover
26	22213423	Rear Cover Plate
27	22333309	Trimmer Bay Cap
28		Felt Washer
29	22283317	Strap Pin
30		
31	22383612	Humbucking Pickup
32	22223308	Escutcheon (upper)
33	22223309	Escutcheon (lower)
34	22113801	Touch Plate
35	22385610	Divided Pickup
36	23133525	Toggle Switch
37	7921702002	Preamp Board
38	13449104	Jack SG-7713
39		Jack Nut
40	13439605	Connector 2324M
41	22910167	Flexible PCB N-167
42	22263309	Cushion
43		Soldering lug B4
44		
45		
46		
47		
48		
49		
50		
51	2214340101	Tremolo Lever
52	2235333202	Base
53	22133323	Rolling Tailpiece
54	22133324	Tension Adjuster
55	22173150	Tension Spring
56	2217315101	Leaf Spring
57	22143821	Tailpiece Shaft
58	22143822	Tension Adjuster Shaft
59	22143823	Base Shaft
60	2213390901	Bridge
61	22563169	Saddle
62	2217315201	Saddle Spring
63		Hex Socket Screw

SCREW, NUT, WASHER, etc.

Location	Description	
64	3 x 6 mm Black	Hex Socket Set
65	5 x 12 mm Black	Hex Socket Set
66	5 x 15 mm Black	Hex Socket Set
67	3 x 20 mm Chrome	Screw Pan
68	3 mm Black	Split Lock Washer
69		
70		
71	2.4 x 10 mm Nickel	Wood
72	2.4 x 15 mm Black	Wood
73	4 x 45mm Nickel	Wood Oval
74	2.3 x 12 mm Black	Tapping Flat
75	2.6 x 10 mm Black	Tapping Flat
76	3 x 15 mm Black	Tapping Flat
77	3.5 x 25 mm Nickel	Tapping Oval
78	3 x 10 mm Black	Tapping Binding
79	3.5 x 30 mm Black	Tapping Pan
80	3 x 16 mm Nickel	Screw Pan
81	3 x 30 mm Nickel	Screw Pan
82	3 x 20 mm Nickel	Screw Oval
83	3 x 6 mm	Screw Binding
84	22283502	Toggle Switch Nut
85	22133803	Toggle Switch Washer
86		Jack Washer
87	9 mm	Internal Tooth Washer
88		Volume Nut
89		Volume Washer
90		Switch Nut
91		Switch Washer
92		Flat Washer
93	3 mm	External Tooth Washer
94	3 mm	Split Lock Washer
95	3 mm	Nut
96	1.6 x 3.2 x 16 mm	Coil Spring
97	1.6 x 3.2 x 30 mm	Coil Spring

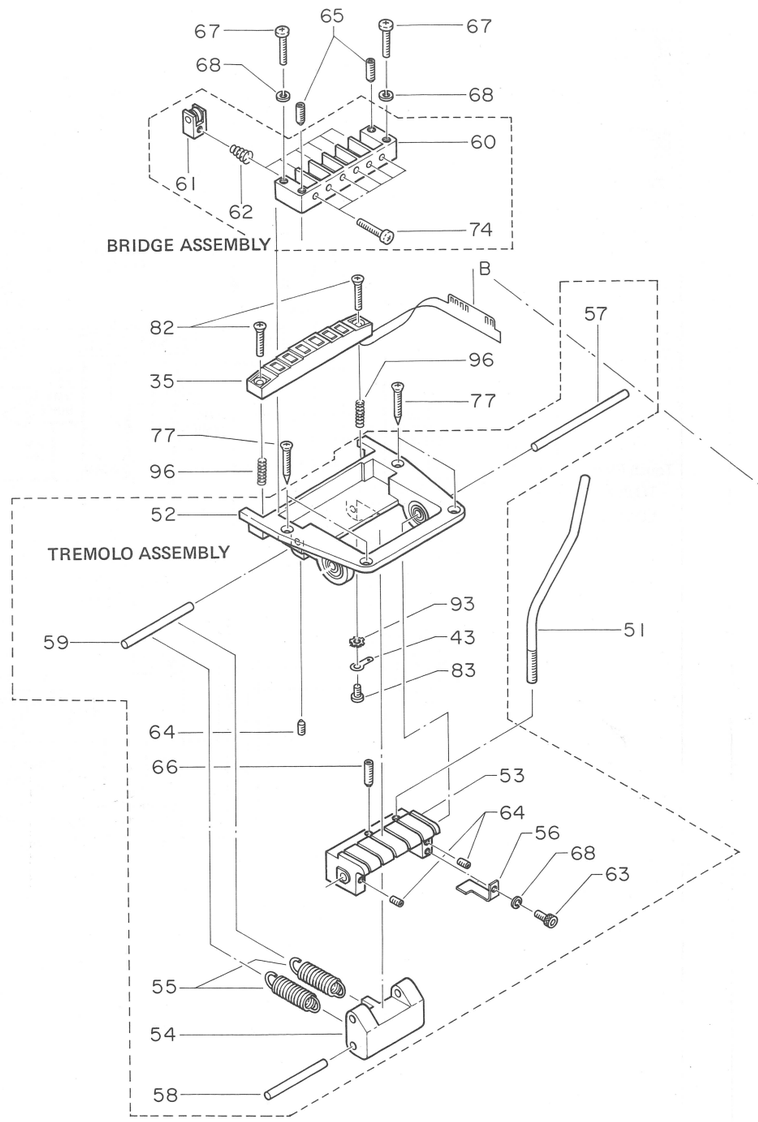

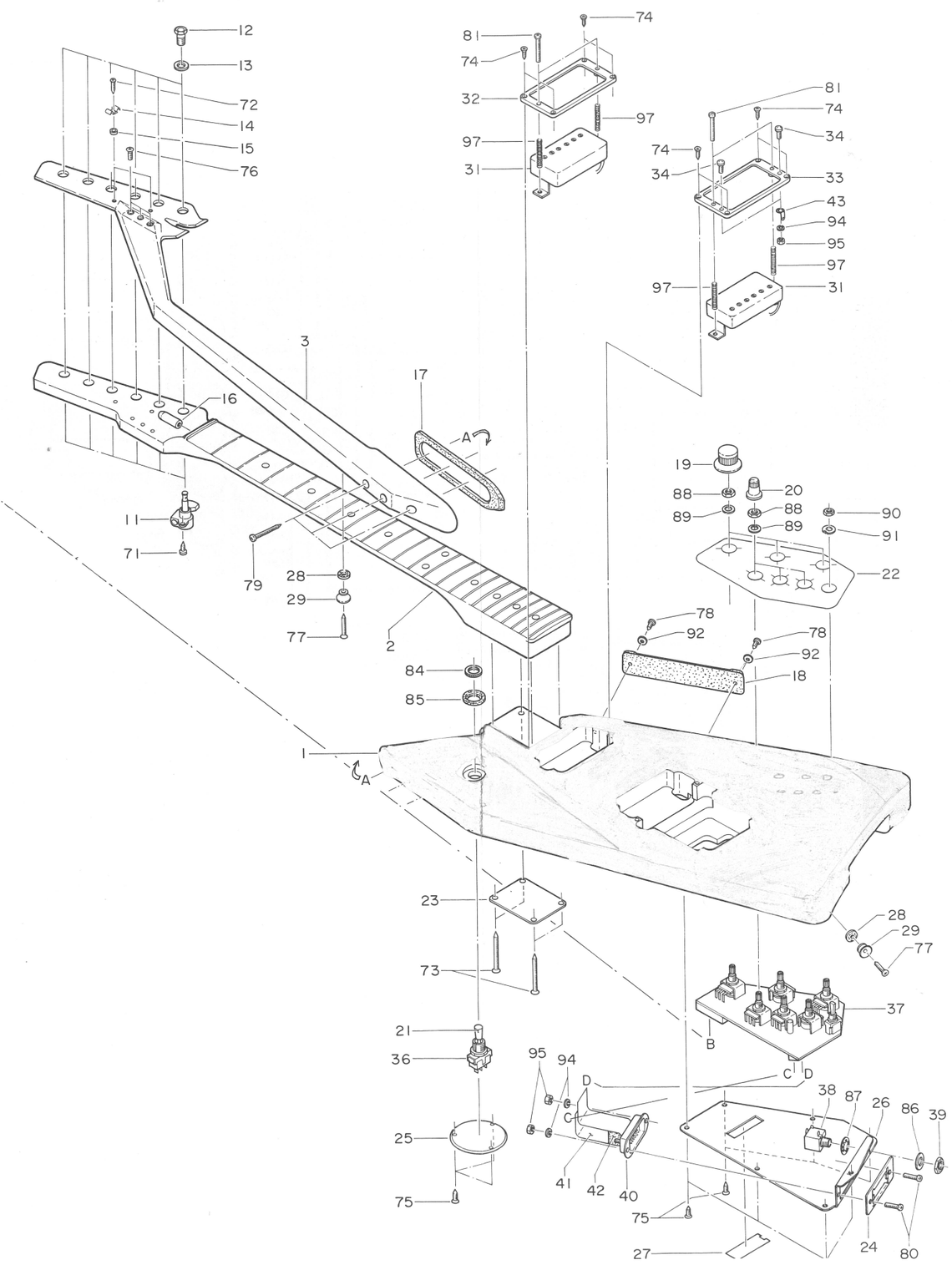

Some detailed parts will be supplied together with associated components in a set or in a subassembly.
Expl. Rolling Tailpiece (53) may come with 54, 56, 58, 63, 64, 66 and 68.

PREAMP BOARD

7921702002

(pcb 2291385303)

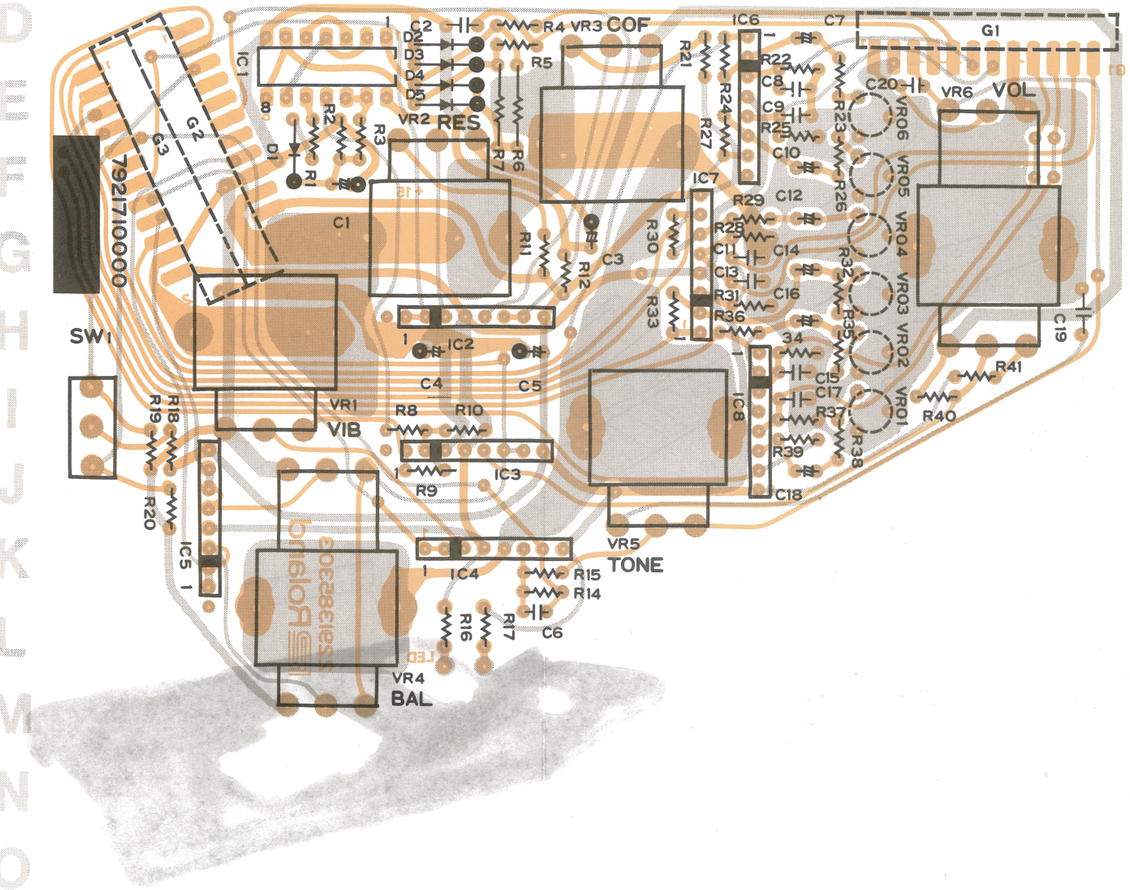

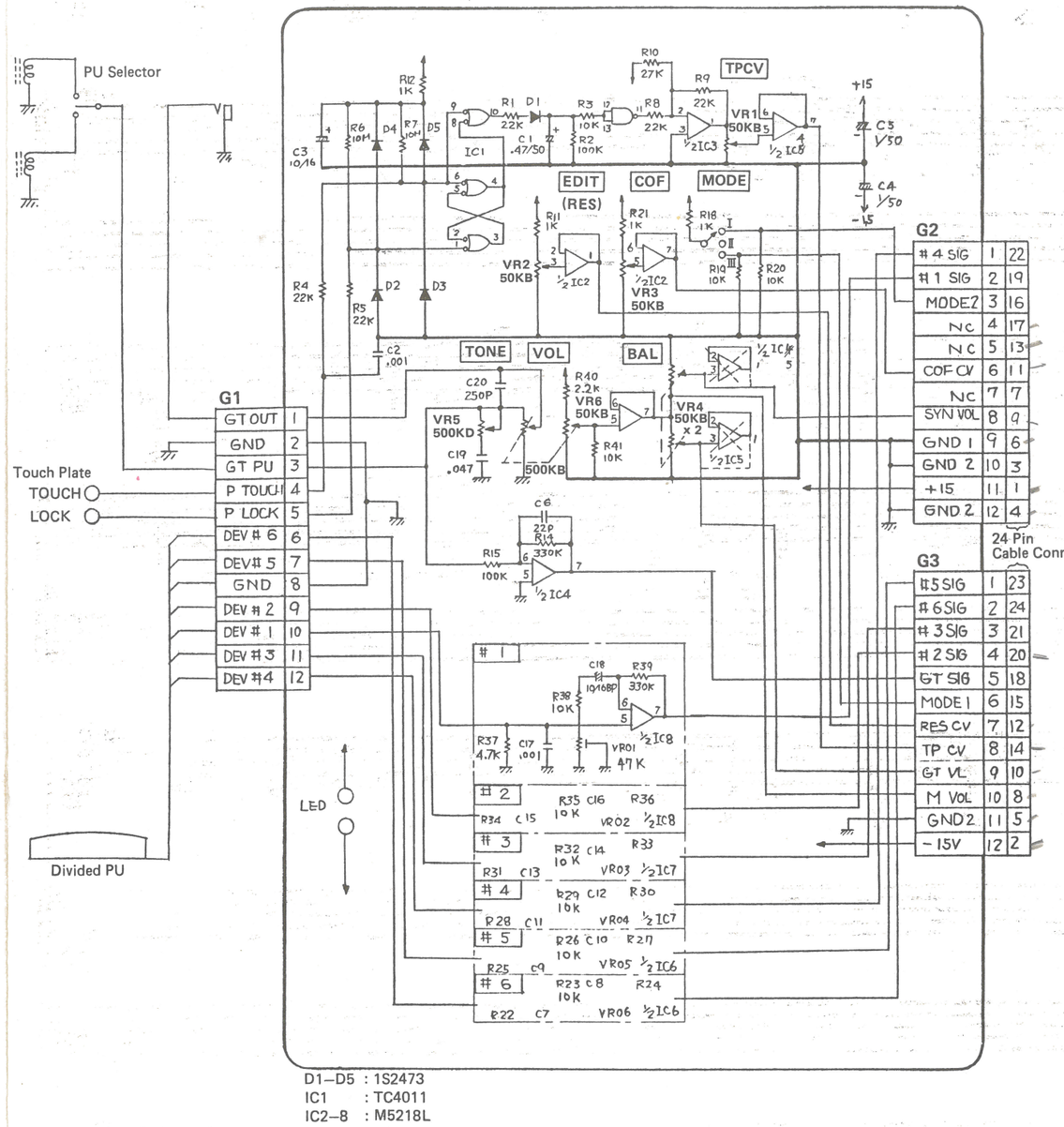

D1–D5 : 1S2473
IC1 : TC4011
IC2–8 : M5218L