Roland

GR

Guitar Controller G-707 INSTRUCTIONS

G-707

The unique appearance of the Guitar Controller G-707 makes its tone remarkably good. The unusual body shape emphasizes the effect of stabilizer. The neck is made of maple, the body of alder, and the stabilizer of newly developed, special plastics. The originally designed Tremolo unit of the G-707 adapts a large ball-bearing of 16 mm diameters and a roller bridge, therefore producing smooth, yet dynamic action, and such a high stability that does require no tuning lock system. Also removing or placing strings is extremely easy.

- If you use the G-707 just as an electric guitar, the following controls are irrelevant to your performance.
  - Balance
  - Cutoff Frequency
  - Edit(Resonance)
  - LFO Modulation
  - Mode Switch

The function of above controls are explained in the GR-707's owner's manual.

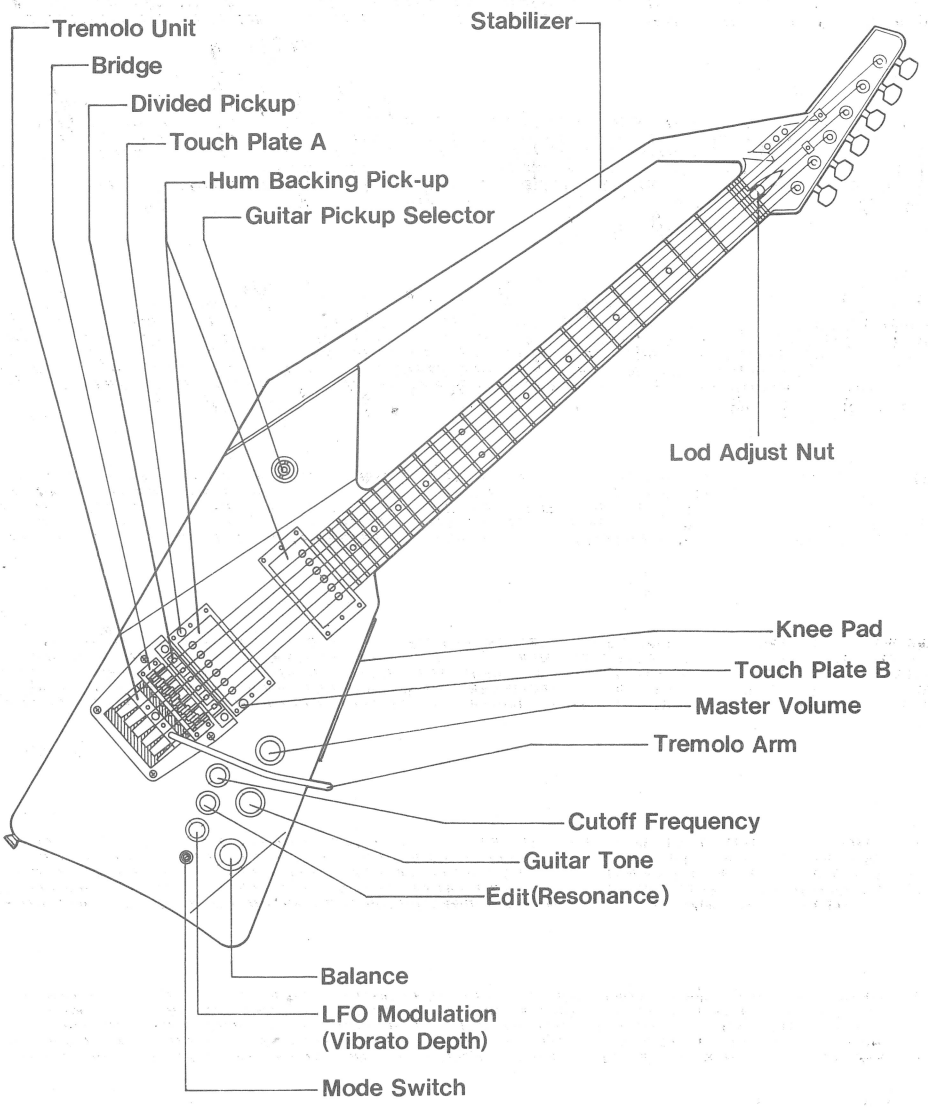

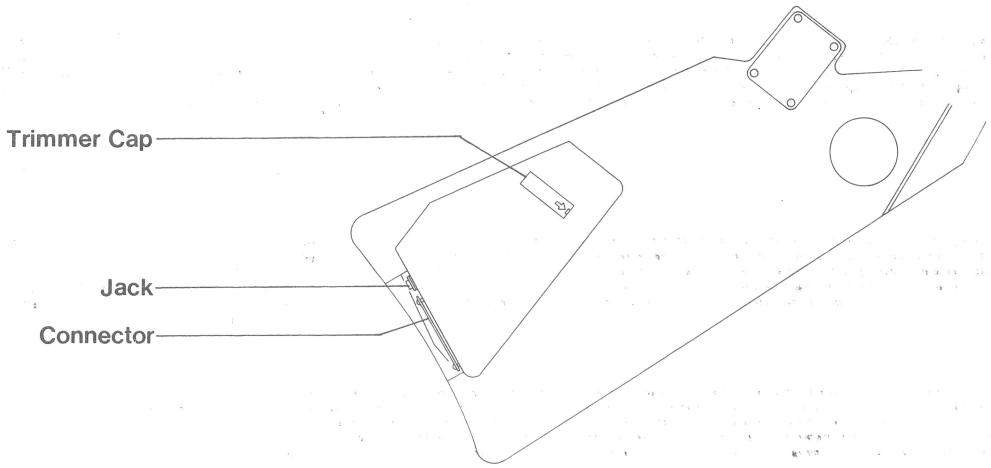

• Bridge Adjustment

1 String Height Adjustment

The height of the bridge can be easily altered. Loosen the cross headed screws(Ⓕ) on the both end of the bridge with a driver. Then loosen the screws(Ⓐ), also situated on the bridge, by using the supplied hexagonal wrench. Now, lower or raise the bridge as you like, then tighten the screws(Ⓕ) to fix the bridge. The manufacturer has set the height of the 1st string to 1.5 mm and the 6th string to 2.0 mm at the 14th fret. The height slightly changes depending on the warp of the neck, so carefully watch it before adjusting the bridge.

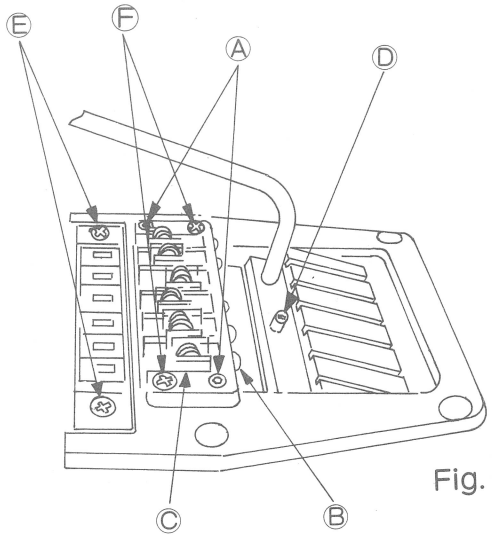

Fig. 1

2 Octave Adjustment

Turn each screw (Ⓑ) on the bridge by using a driver, and the saddle (Ⓒ) will move towards the neck or the bottom of the guitar along the string, which therefore changes the length of the string. A tuner is to be used for accurate tuning.

• Tremolo Unit Adjustment

The angle of the Tremolo arm may change after string replacement. In such a case, adjust it by rotating the screw (Ⓓ) with the supplied hexagonal wrench (small).

* For smooth action of the Tremolo arm, you may apply slight silicone grease to the grooves on the nut.
  Every time you have placed a new string, please take the following procedure.

(1) Initially stretch the string so that it will properly fit each part of the peg, nut, bridge and tailpiece.

(2) After tuning each one of the strings, move the Tremolo arm as far as possible in both directions several times.

(3) Again tune each string (if you have time, repeat (1) and (2) several times).

* The tremolo arm will be loosen if rotated counterclockwise, and tighten if rotated clockwise just like a screw, therefore easily removed and attached. Also, the tremolo arm can be perfectly fit in the carrying case by rotating the arm in the opposite direction of the neck. (= in the direction of the end-pin)

• Divided Pick-up

After adjusting the string height (by changing the bridge height), adjust the distance between the divided pick-up and the string in order to obtain even more accurate guitar synthesizer performance. By rotating the screws on both end of the divided pick-up, adjust the height so that the distance between the 1st string and the polepiece of the pick-up will be 0.5 mm and that of the 6th string 0.8 mm at the 22nd fret.

• Removing the Trimmer Cap

When using the GR-700 with the G-707, you can control the sensitivity (output level) of the synthesizer sound by using the trimmer. To do this, however, you need to remove its cap as follows. By using a small driver, pull out the trimmer cap. Here, try not to push the driver too deeply, otherwise, the tip of the driver may damage the PCB. Also, if the tip of the cap is brought out, you can easily take it off with your fingers. (Fig.2)

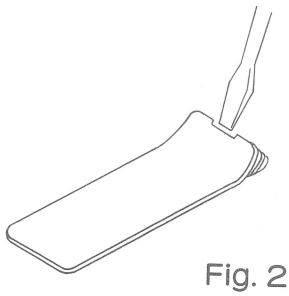
Fig. 2

* How to adjust the sensitivity (output level) with the trimmer is shown in the GR-700's owner's manual.

* If using the GR-100 or GR-300, sensitivity (output level) adjustment is not necessary.

* Be sure to replace the cap after trimmer adjustment, as shown in Fig.3.

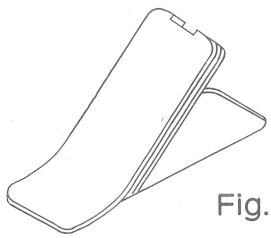
Fig. 3

Accessories
Hexagonal Wrench (large) 4 m/m diagonal
Hexagonal Wrench (small) 2.5 m/m diagonal
Shielded Cord