E-28

INTELLIGENT KEYBOARD

SERVICE NOTES

First Edition

Issued by RES

TABLE OF CONTENTS

	Page
SPECIFICATIONS	1
DISASSEMBLY	1
LOCATION OF CONTROLS	2
EXPLODED VIEW & REAR VIEW	3
KEYBOARD PARTS LIST	4
BLOCK DIAGRAM	4
CONTROL PCB ASSY & CIRCUIT DIAGRAM	5
MAIN PCB ASSY	6
CIRCUIT DIAGRAM (MAIN PCB ASSY)	7
CPU MODULE PCB ASSY & CIRCUIT DIAGRAM	8
RIGHT CONTACT PCB ASSY w/RUBBER CONTACT & CIRCUIT DIAGRAM	9
LEFT CONTACT PCB ASSY w/RUBBER CONTACT & CIRCUIT DIAGRAM	9
PARTS LIST	10
IDENTIFYING VERSION NUMBER	10
TRANSLATION FROM ENGLISH INTO JAPANESE	10

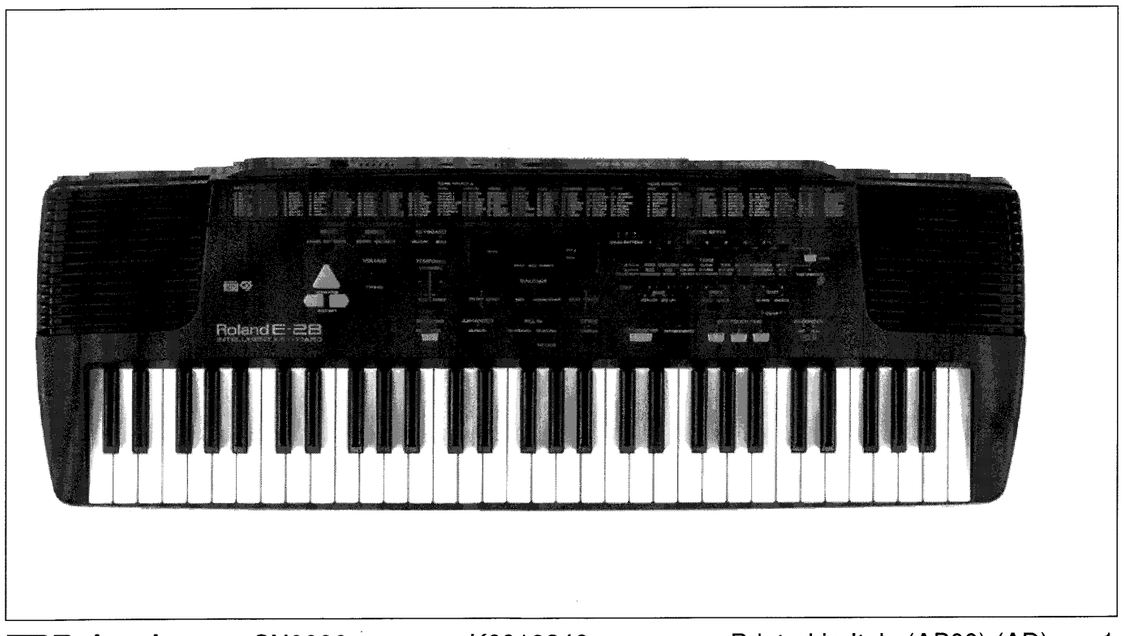

SPECIFICATIONS

•Keyboard	:61 keys,velocity sensitive		
•Sound Source	:Newly developed with TVF(GM/GS Format)		
•Maximum Polyphony	:24 Voices		
•Number of Tones	:223+8 Drum Sets+1 SFX set		
•Multitimbral Parts	**:16**		
•Music Styles	:64+64		
•Recorder	:1 Song		
•Demo Songs	:8		
•Built-in Digital Effects	:Reverb,Chorus		
•Display	:7-Segment LED x 3		
•Wave Memory	:1 Mbytes		
•Jack and Connections	:Phones		
	:Output (R,L/Mono)		
	:MIDI (In,Out)		
	:Sustain		
	:DC In		
•Controls	:Master Volume	(Button)	
	:Tempo/Data	(Button)	
	:Pitch Shift	(Button)	
	:Modulation	(Button)	
•Stereo Output Level	:-13 dBm	Master Vol	:Max
		Tone	:Sine Wave
		Play	:C4 Key
•Stereo Output Impedence	:1,6K Ohm		
•Speakers	:Full Range 12cm(5") x 2		
•Amplifier	:4W + 4W		
•Power Supply	:12V,1A(ACO AC/DC Adapter)		
•External Dimension	:955(W)x340(D)x116(H) mm		
•Weight	:5.6kg		
•Accessory	:Owner's Manual (I/E/D/F)	E-28	(K6018256)
	:Owner's Manual (J/E/D/F)	E-28	(K6018254)
	:MIDI Guide		(K6018109)
	:MIDI Implementation	E-28	(K6018252)
	:Music Rest		(K2198102)
	:Music Score Holder		(22208320)
	:Power Adaptor ACO 100V 1A	(100V)	(K2448110)
	:Power Adaptor ACO 120V 1A	(117V)	(K2448109)
	:Power Adaptor ACO 230V 1A	(230V)	(K2448106)
	:Power Adaptor ACO 230VE 1A	(230VE)	(K2448107)
	:Power Adaptor ACO 240VA 1A	(240VA)	(K2448108)
	:Outer Packing	E-28	(K2618168)

DISASSEMBLY

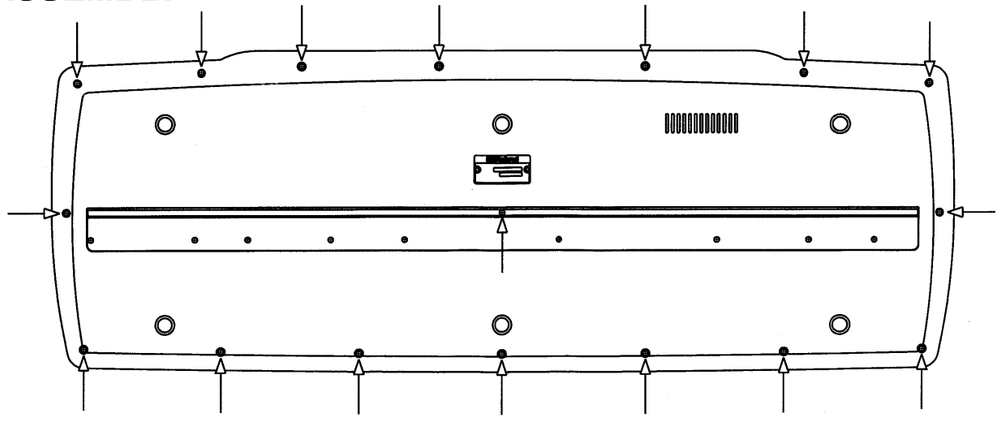

SILKSCREENED BOTTOM CABINET ASSY REMOVING SCREWS
17 PCS OF SCREW 2.9x13 TC TC PR TROP (J2289130)

Copyright © 1996 by ROLAND CORPORATION

LOCATION OF CONTROLS

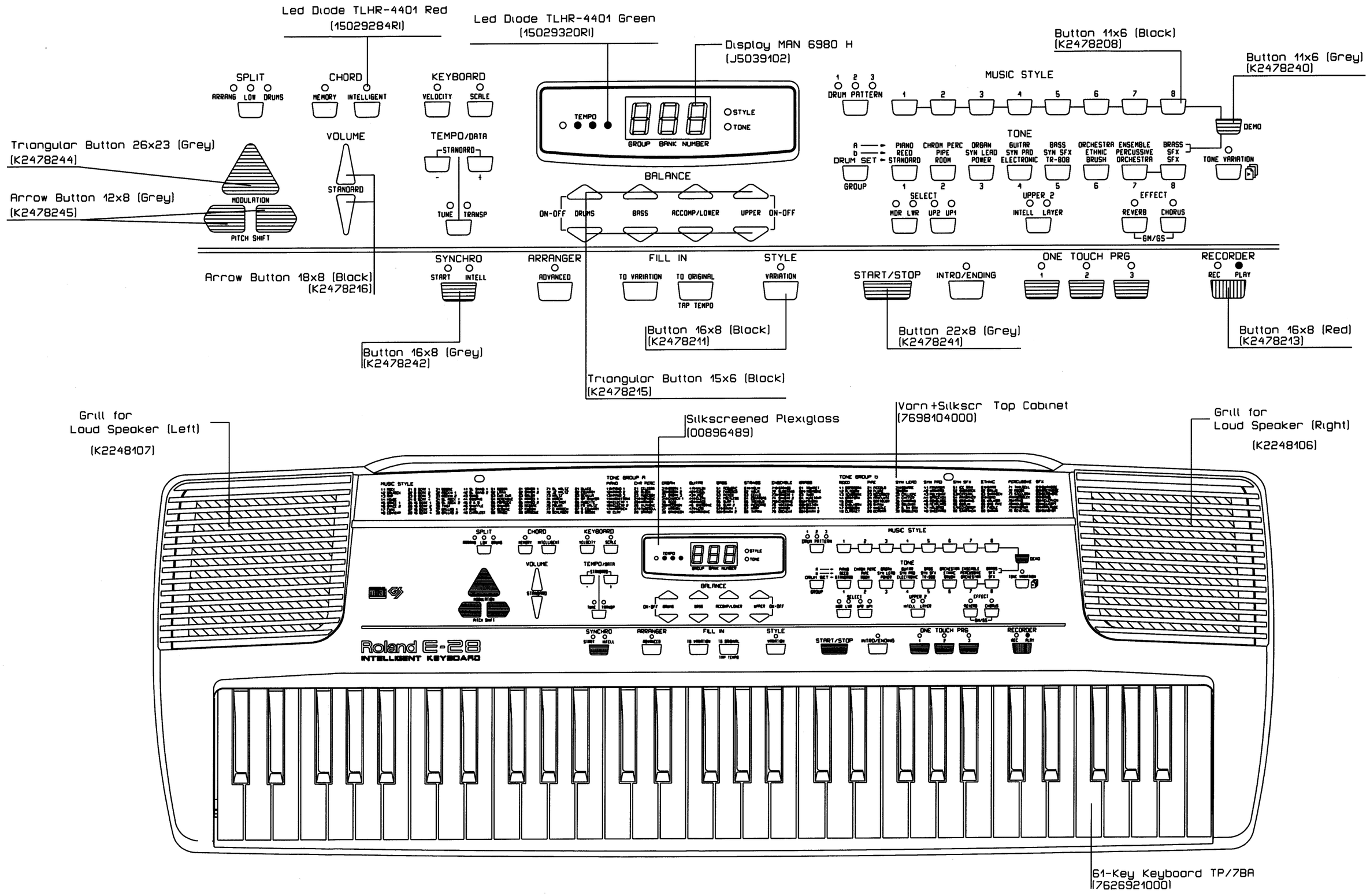

EXPLODED VIEW

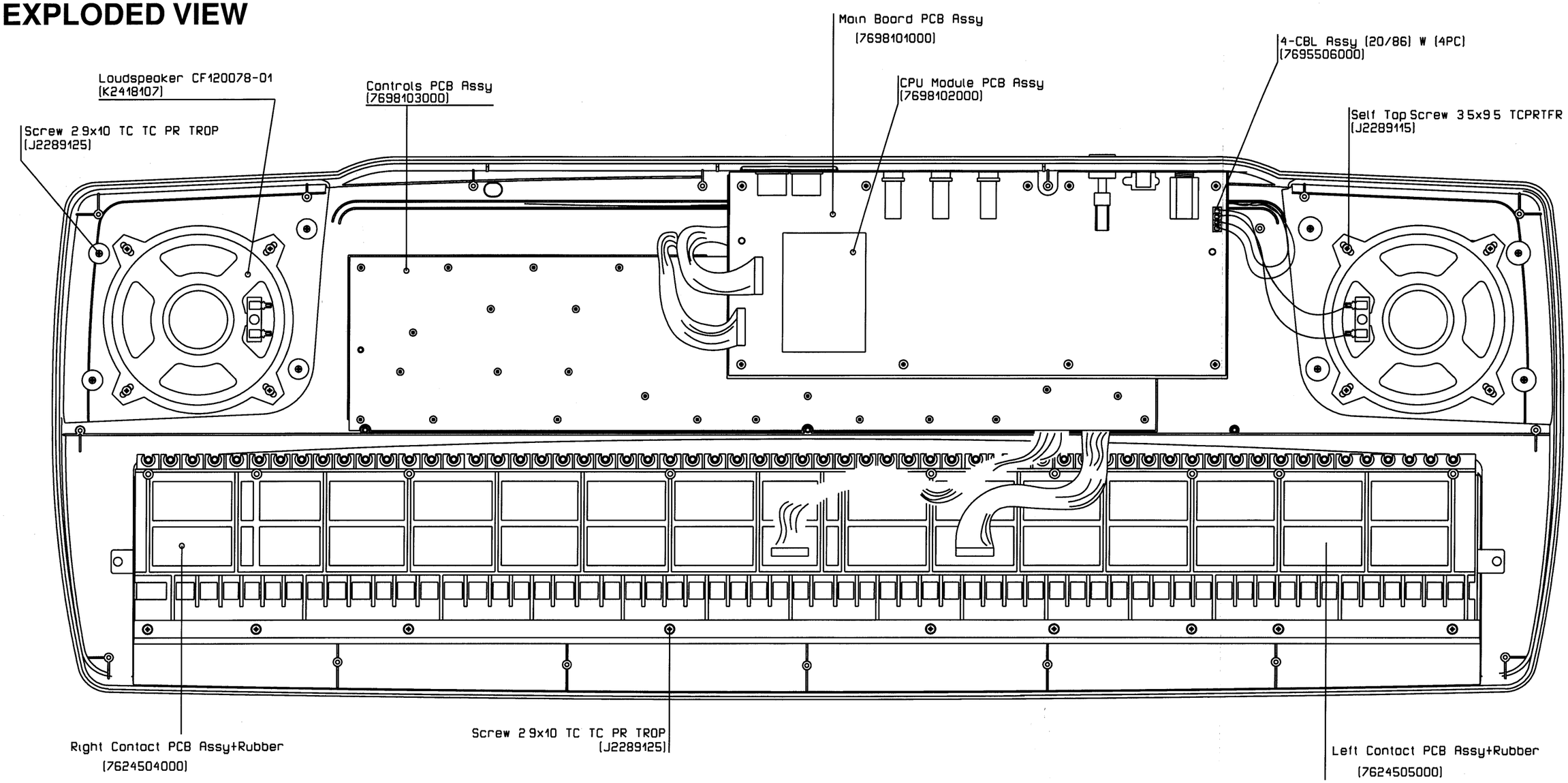

REAR VIEW

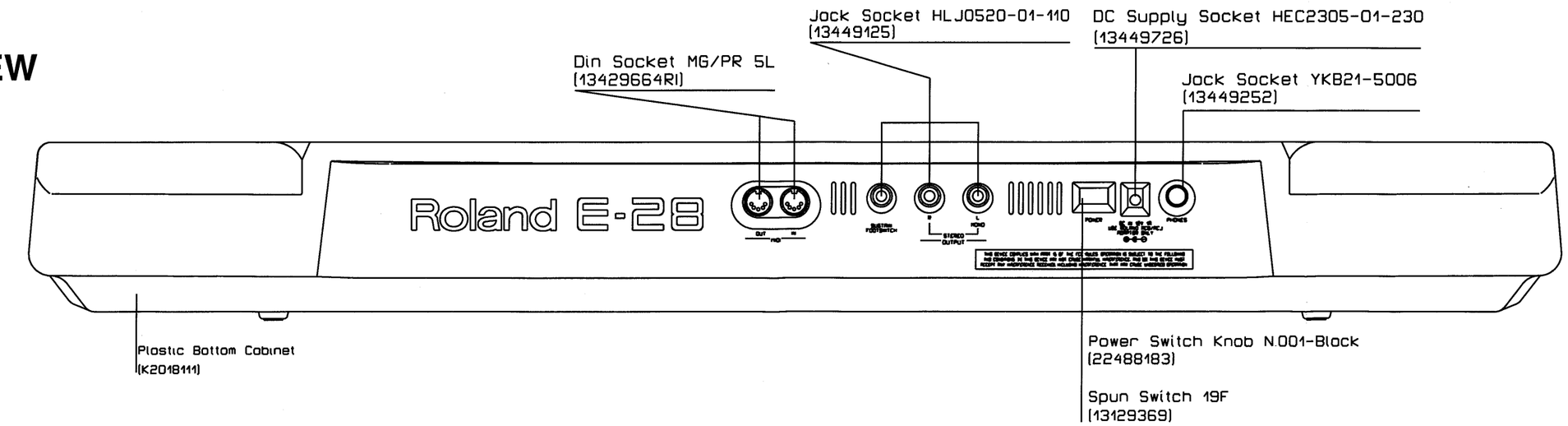

KEYBOARD PARTS LIST

Ref	Description		Code	Quantity
1	DOUBLE HEADED SPRING		22178226	61
2	WHITE KEY	DO	J2579123	5
	"	RE	J2579124	5
	"	MI	J2579125	5
	"	FA	J2579126	5
	"	SOL	J2579127	5
	"	LA	J2579128	5
	"	SI	J2579129	5
	"	DOfin	J2579130	1
3	BLACK KEY		22578318	25
4	SCREW 2.9x10 TC TC PR TROP		J2289125	34
5	RUBBER CONTACT 12 POSITIONS		22185238	4
6	RUBBER CONTACT 13 POSITIONS		22185239	1
7	LEFT CONTACT PCB ASSY (WITH RUBBER CONTACT)		7624505000	1
8	RIGHT CONTACT PCB ASSY (WITH RUBBER CONTACT)		7624504000	1
9	KEYBOARD SUPPORT 61 KEYS		22818746	1
10	ADHESIVE RUBBER 8 X 2.5 X 848		22358151	1
11	RUBBER END STROKE		22158789	61

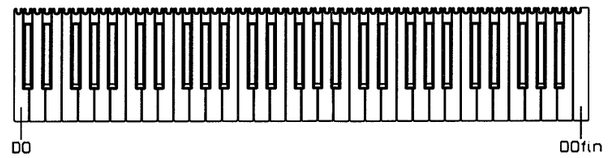

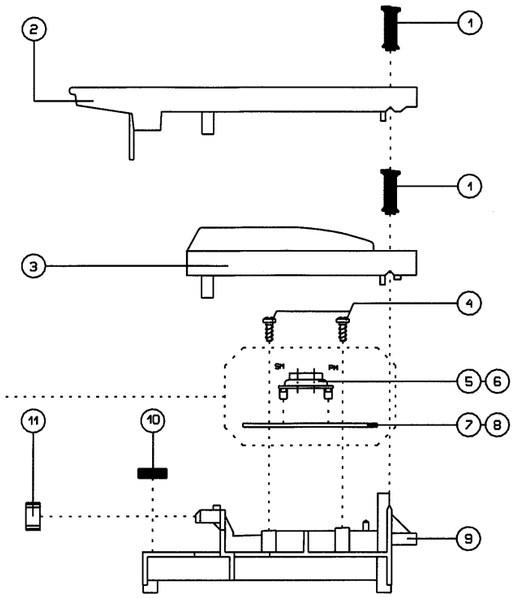

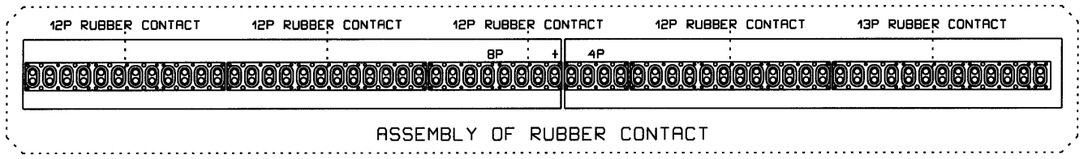

ASSEMBLY OF RUBBER CONTACT

BLOCK DIAGRAM

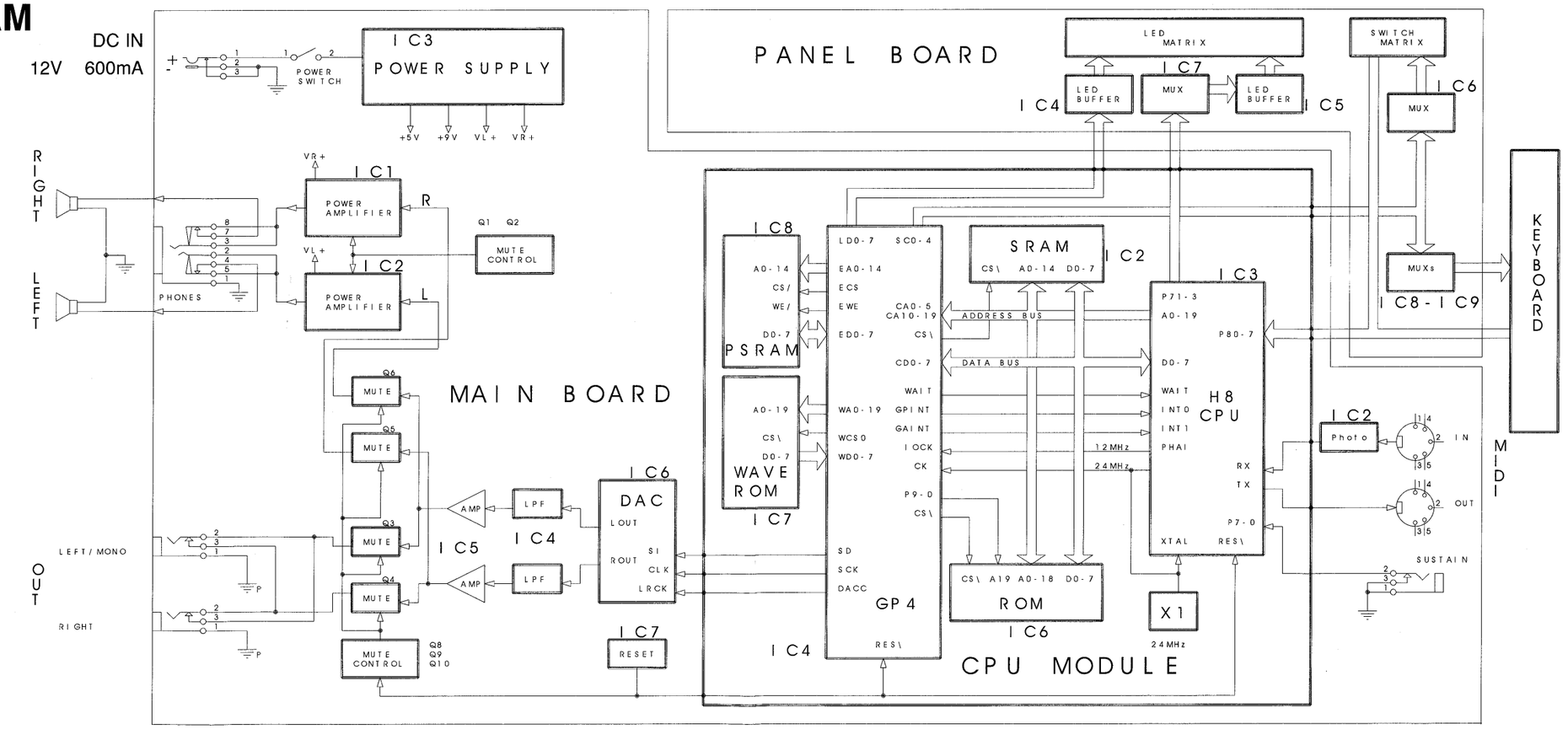

CONTROL PCB ASSY ASSY 7698103000

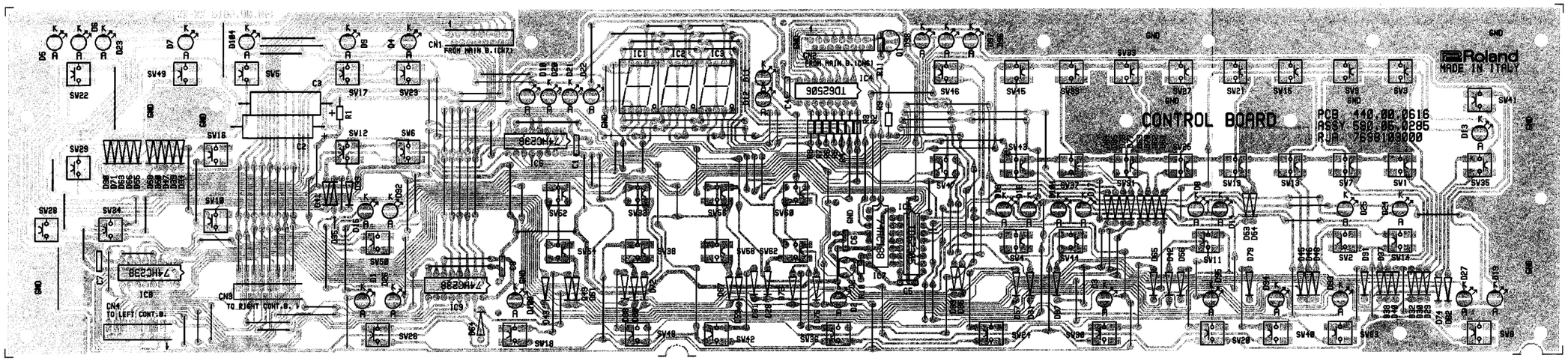

View from component side

CIRCUIT DIAGRAM

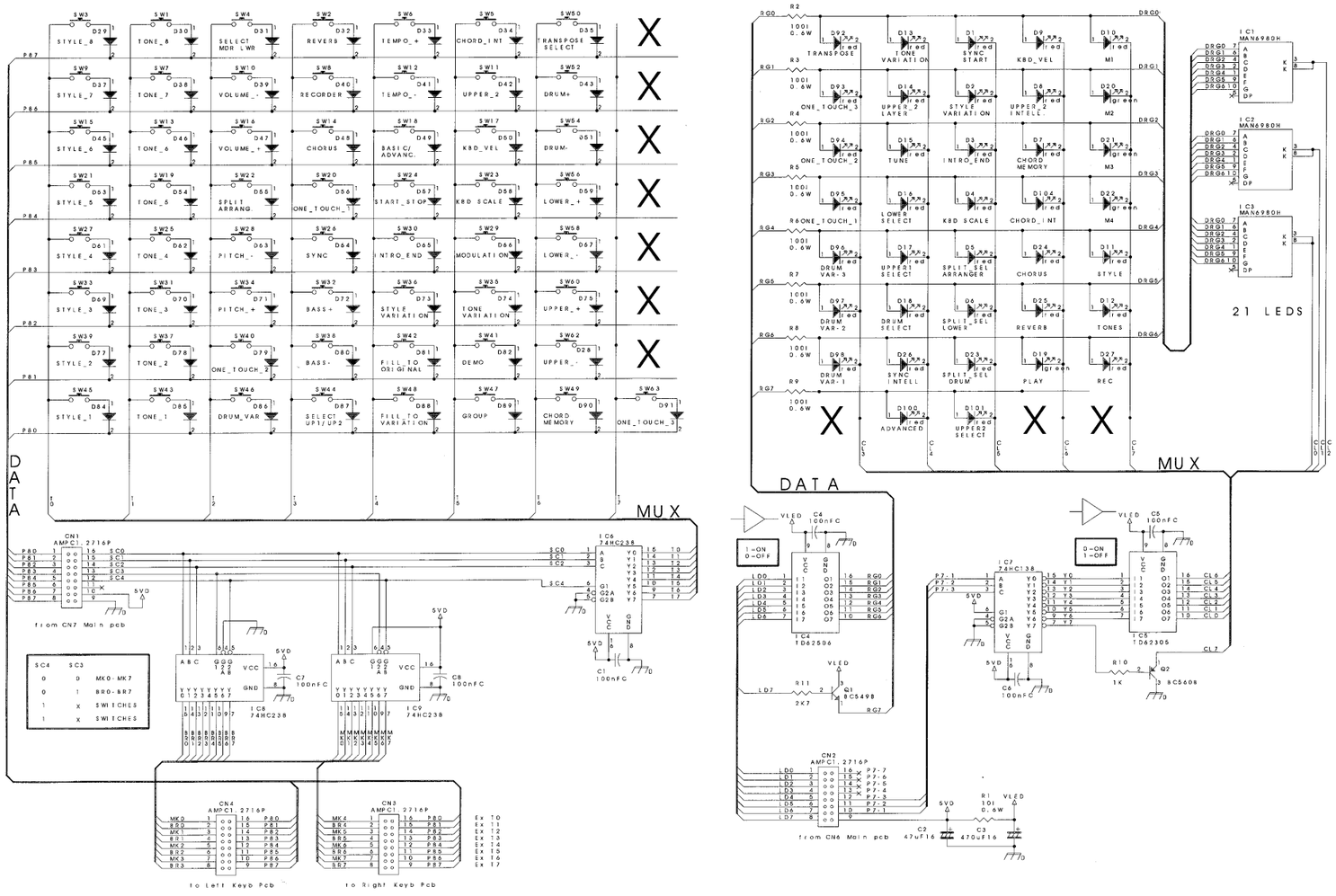

MAIN PCB ASSY

ASSY 7698101000

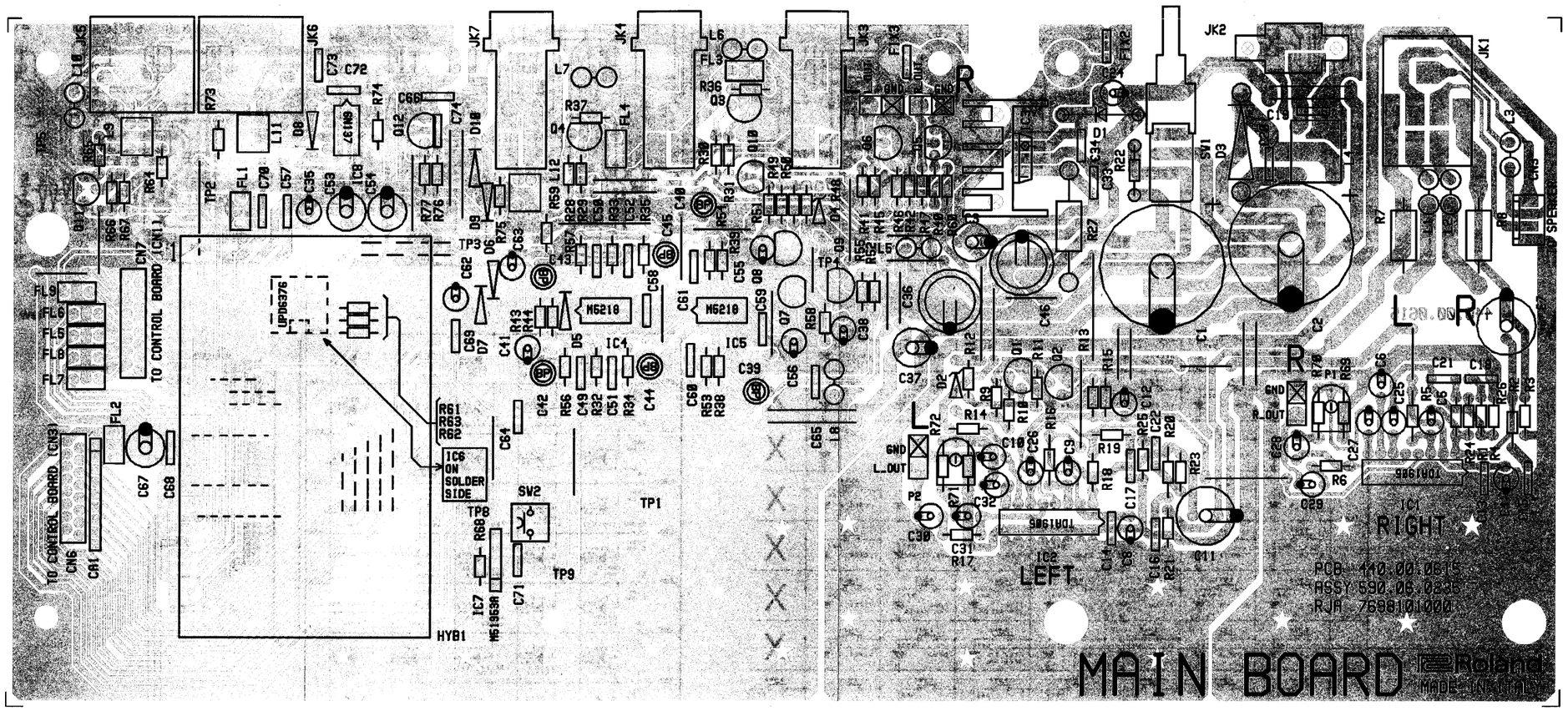

View from component side

CIRCUIT DIAGRAM (MAIN PCB ASSY)

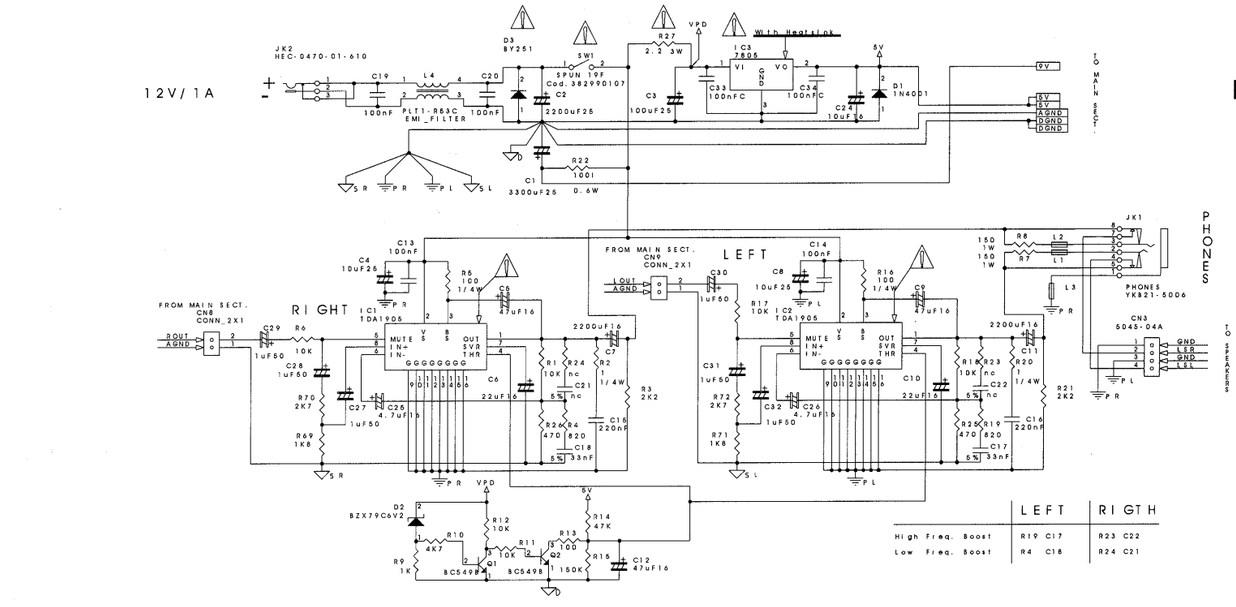

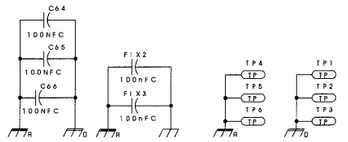

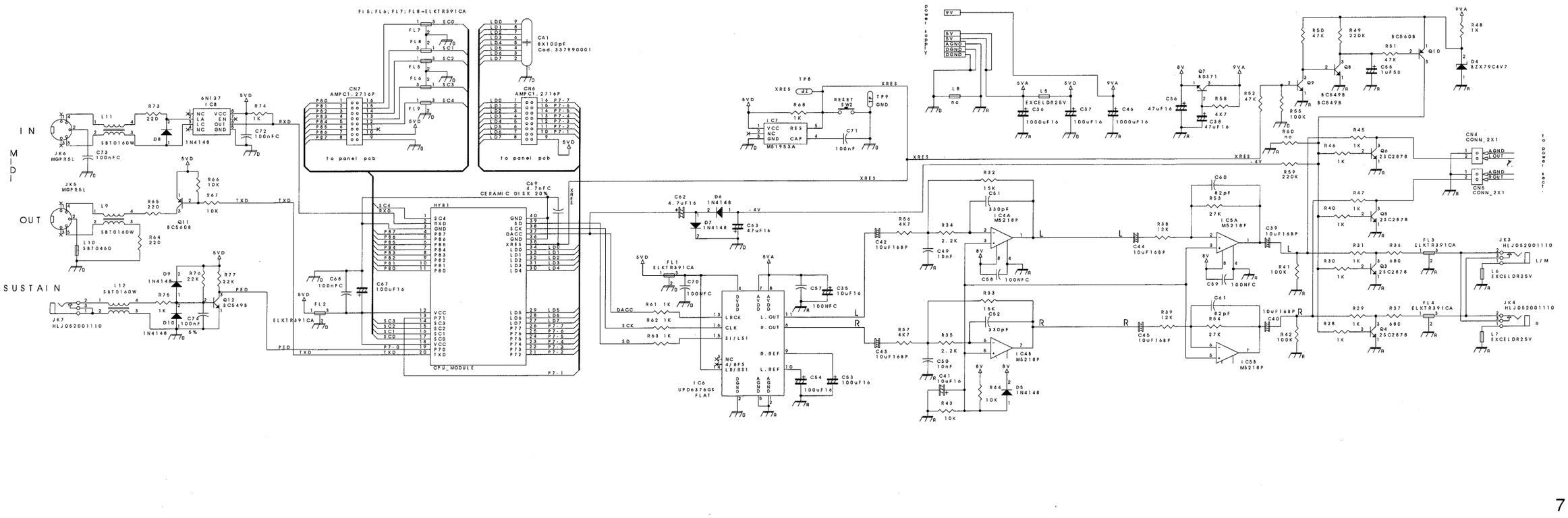

CPU MODULE PCB ASSY ASSY 7698102000

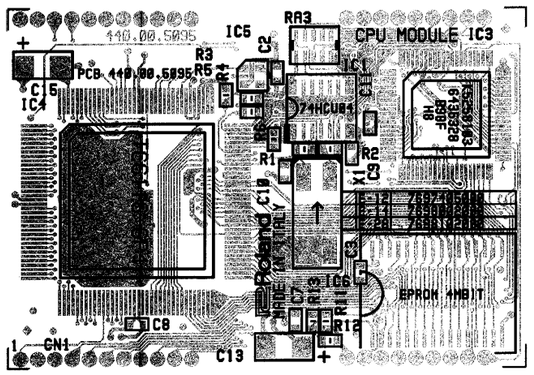

View from component side

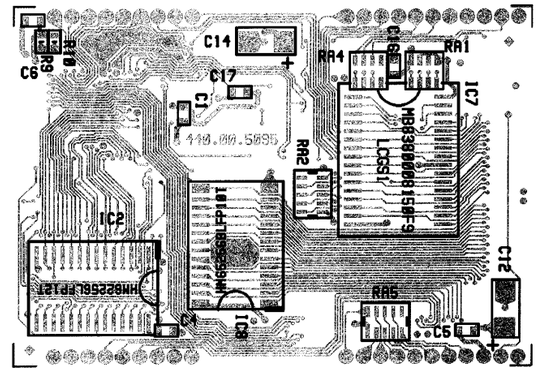

View from solder side

CIRCUIT DIAGRAM

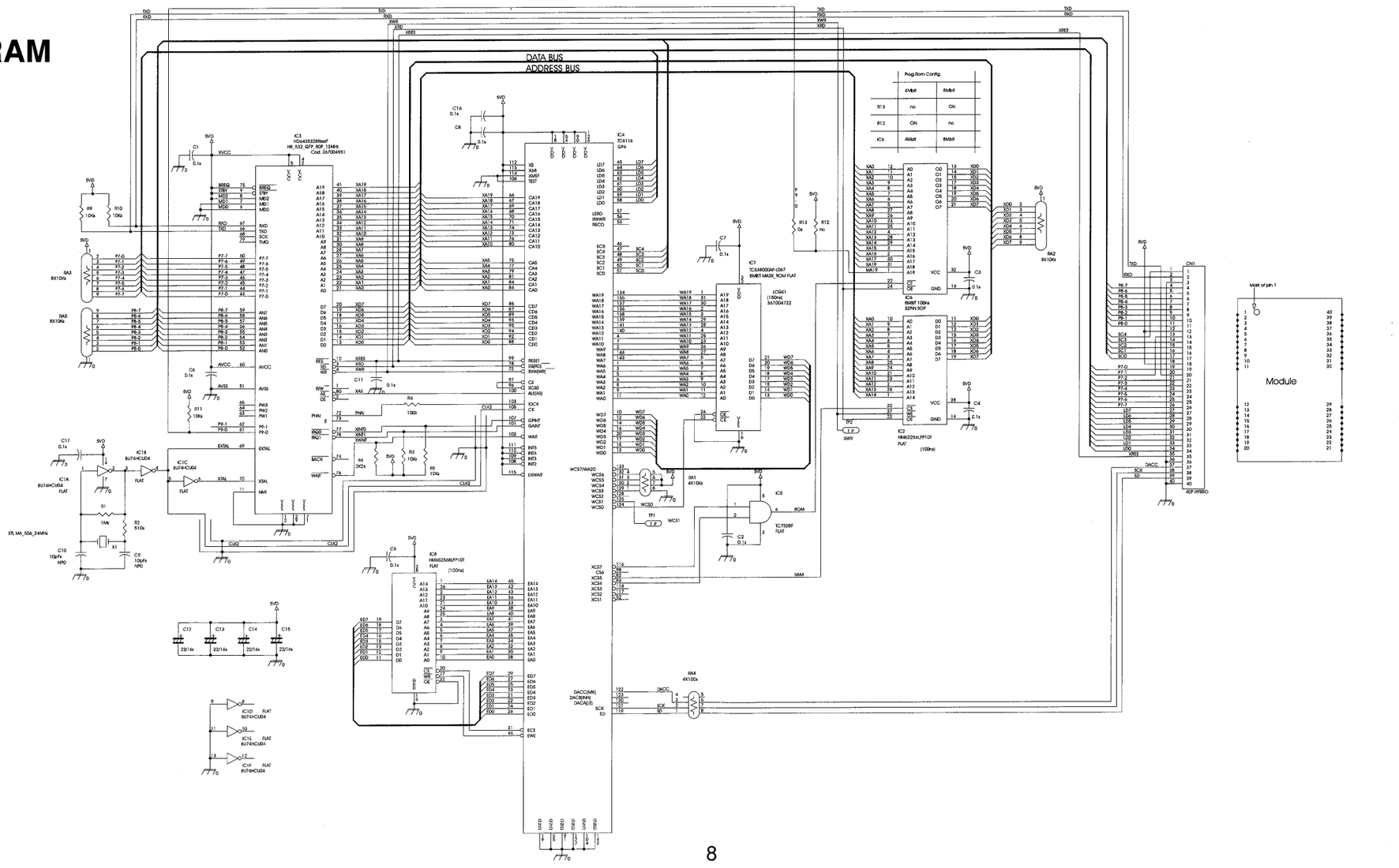

1 2 3 4 5 6 7 8 9 10 11 12 13 14 15 16 17 18 19 20 21 22 23 24 25 26 27 28 29 30

A B C D E F G H I J K L M N O P Q R S T U

RIGHT CONTACT PCB ASSY w/RUBBER ASSY 7624504000

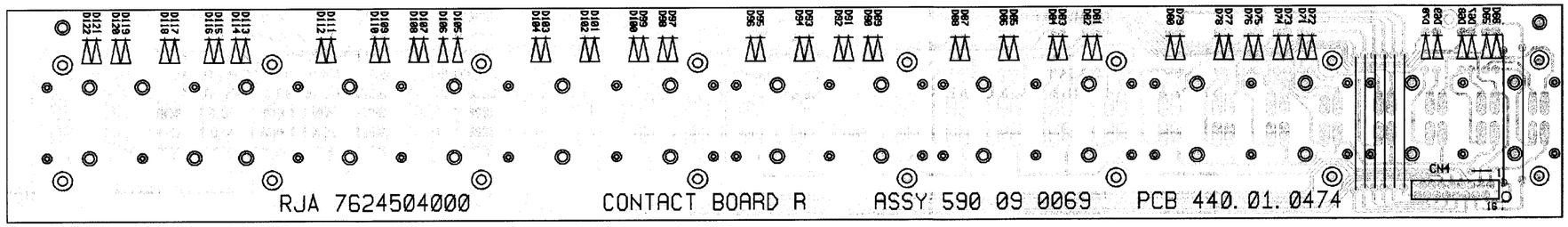

View from component side

LEFT CONTACT PCB ASSY w/RUBBER ASSY 7624505000

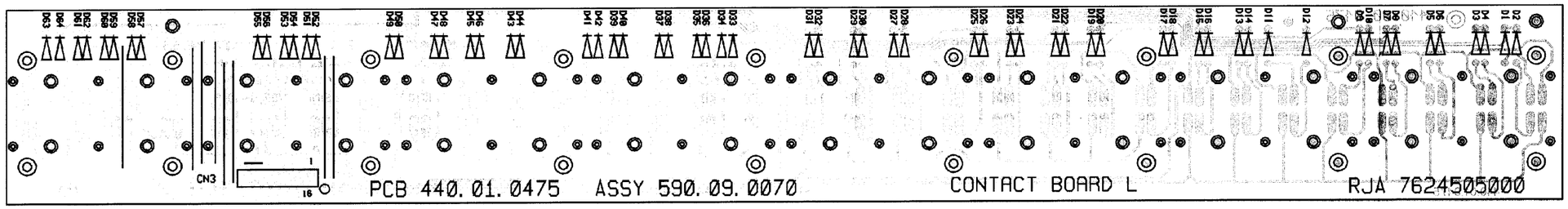

View from component side

CIRCUIT DIAGRAM (RIGHT CONT.PCB ASSY)

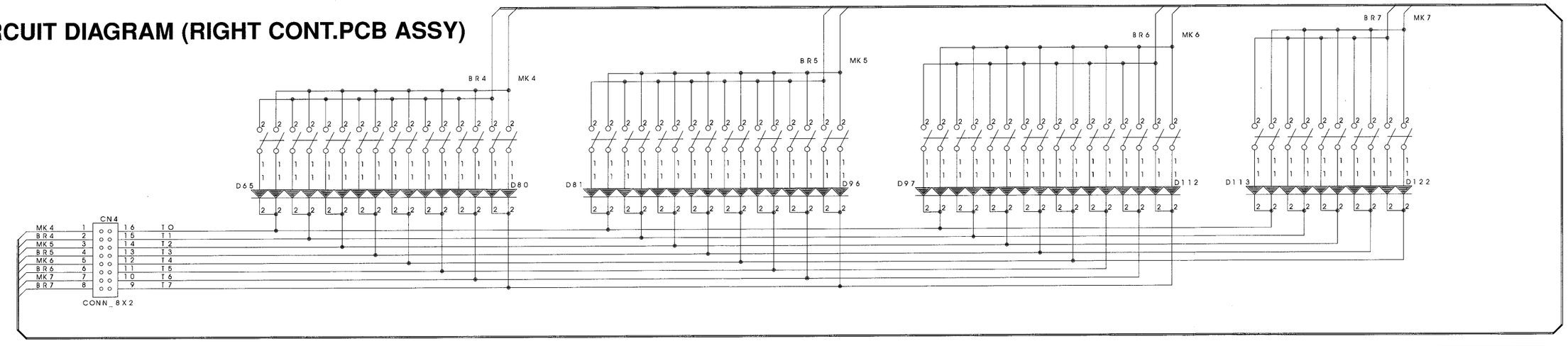

CIRCUIT DIAGRAM (LEFT CONT.PCB ASSY)

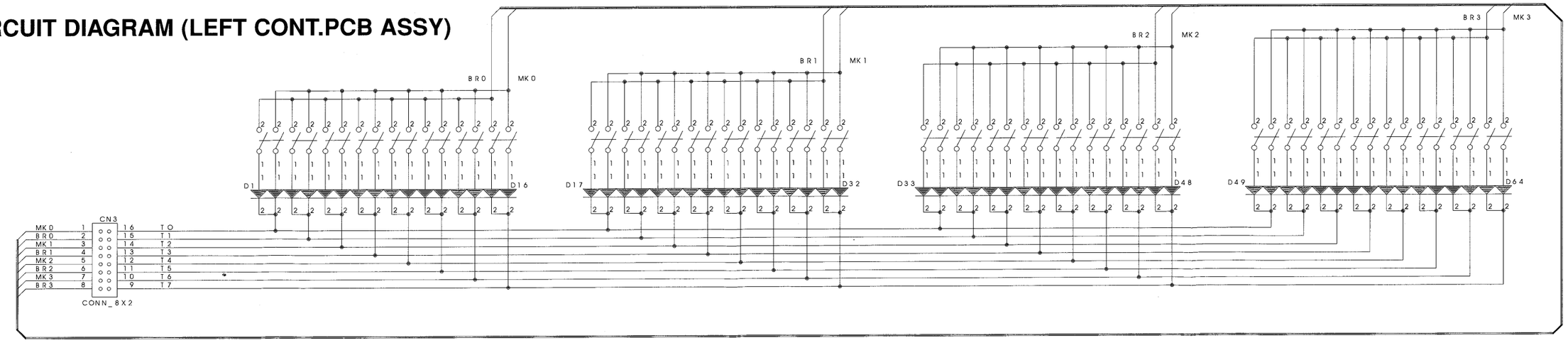

PARTS LIST E-28 (100V/117V/230V/230VE/240VA)

SAFETY PRECAUTIONS :

The parts marked ⚠ have safety-related characteristics. Use only listed parts for replacement.

CONSIDERATION ON PARTS ORDERING

When ordering any parts listed in the parts list,please specify the following items in the order sheet.

	QTY	PART NUMBER	DESCRIPTION	MODEL NUMBER
Ex.	10	225752410	Sharp Key	C-20/50
	15	2247017300	Knob (orange)	DAC-15D

Failure to completely fill the above items with correct number and description will result in delayed or even undelivered replacement.

NOTE : *The parts marked "#" are new (Initial Parts).*
The parts marked ⚠ have Safety - Related characteristics.
Use only listed parts for replacement.

<< EMI >> *: Component for EMC.*

CB	=	Control Board
LB	=	Left Contact Board
RB	=	Right Contact Board
CPU	=	CPU Module
MB	=	Main Board

CASING

	K2248106	GRILL FOR LOUDSPEAKER - RIGHT	
	K2248107	GRILL FOR LOUDSPEAKER - LEFT	
	00896489	PLEXIGLASS	E12/E14/E28
	K2018111	PLASTIC BOTTOM CABINET	E-16
#	7698104000	VARN+SILKSCR. TOP CABINET	E-28

KNOB BUTTON

	K2478208	BUTTON	MM 11X6	(BLACK)
	K2478211	BUTTON	MM 16X8	(BLACK)
	K2478213	BUTTON	MM 16X8	(RED)
	K2478215	TRIANG.BUTTON	MM15X6	(BLACK)
	K2478216	ARROW BUTTON	MM18X8	(BLACK)
	K2478240	BUTTON	MM 11X6	(GREY)
	K2478241	BUTTON	MM 22X8	(GREY)
	K2478242	BUTTON	MM 16X8	(GREY)
	K2478244	TRIANG.BUTTON	MM 26X23	(GREY)
	K2478245	ARROW BUTTON	MM12X18	(GREY)
	22488183	POWER SWITCH KNOB N.001		(BLACK)

SWITCH

⚠	13129369	SPUN SWITCH 19F	SW1 on MB
	J3169105	SWITCH TP-1101A	All Switches on CB

JACK, SOCKET

	13449726	DC SUPPLY SOCKET	HEC 2305-01-230	JK2 on MB
	13449252	JACK SOCKET	YKB 21-5006	JK1 on MB
	13449125	JACK SOCKET	HLJ0520-01-110	JK3, JK4 JK7 on MB
	13429664RI	DIN SOCKET	MG/PR 5L	JK5 JK6 on MB

DISPLAY UNIT

	J5039102	DISPLAY	MAN 6980 H	IC1, IC2, IC3 on CB

SPEAKER

	K2418107	LOUDSPEAKER CF120078-01

KEYBOARD ASSY

	7626921000	61-KEY KEYBOARD TP/7BA

NOTE : For details, refer to KEYBOARD PARTS LIST (Pag.4)

PCB ASSY

#	7698103000	CONTROLS PCB ASSY	E-28
#	7698101000	MAIN BOARD ASSY	E-28
# E	7698102000	CPU MODULE ASSY	E-28
	7624504000	RIGHT CONTACT PCB ASSY W/RUBBER	
	7624505000	LEFT CONTACT PCB ASSY W/RUBBER	

Note : Replacement CPU MODULE PCB ASSY should be made on a unit basis. No replacements available for individual parts. Replacement only be a unit.

IC

	15279823	I.C. TC538000AF-L067	FLAT	IC7 on CPU
#	K525812010	I.C.8MBIT ROM		IC6 on CPU
#	K525812110	I.C. HD6435328RW20F	FLAT	IC3 on CPU
	15169550RI	I.C. 74 HC138		IC7 on CB
	J5159106	I.C. 74 HC238		IC6, IC8, IC9 on CB
	15259886	I.C. 74 HCU 04	FLAT	IC1 on CPU
	15279510	I.C. HM65256 BLFP-10T	FLAT	IC8 on CPU
	J5259004	I.C. HM62256LFP-10T	FLAT	IC2 on CPU
	15239229	I.C. TC6116-GP4		IC4 on CPU
	15259884	I.C. TC7S08F MOS		IC5 on CPU
	15219183	I.C. M51953 A	STANDING	IC7 on MB
	15199559RI	I.C. TD 62506P		IC4 on CB
	15199560RI	I.C. TD 62305AP		IC5 on CB
	15189251	I.C. M5218 P		IC4, IC5 MB
	15289702	I.C. UPD6376	DAC	IC6 on MB
⚠	15199197RI	I.C. UA 7805	SCNC	IC3 on MB
⚠	15199550RI	I.C. TDA 1905		IC1, IC2 on MB
	15229718RI	I.C. 6N137 PHOTOCOUPLER		IC8 on MB

TRANSISTOR

	15119155RI	TRANSISTOR	BC/560-B	Q10, Q11 on MB
	J5119101	TRANSISTOR	BD 371 C	Q7 on MB
	15119154RI	TRANSISTOR	BC/549-B	Q1, Q2, Q8 Q9 on MB
	15129136	TRANSISTOR	2SC-2878-A/B	Q3, Q4, Q5 Q6 on MB

DIODE

	15019159RI	DIODE	1N-4148	D5, D6, D7, D8, D9, D10 on MB/CB/LB/RB
	15029320RI	LED DIODE TLHG4401	GREEN	CB
	15029284RI	LED DIODE TLHR4401	RED	CB
	J5019101	ZENER DIODE	BZX79C 4V7	D4 on MB
	15019332RI	ZENER DIODE	BZX55C 6.2V	D2 on MB
	15019158RI	DIODE	IN-4001	D1 on MB
⚠	15091172RI	DIODE	BY 251	D3 on MB

RESISTOR

	15399917	CHIP RES. ARRAY	4X 10K E/U	RA1 on CPU
	15399932	CHIP RES. ARRAY	4X100 E/U	RA4 on CPU
	J3919104	CHIP RES.ARRAY	2512 8X10 K +2C	RA2, RA3, RA5, on CPU
	13819132RI	UNINFL.RES.	100 OHM 0.6W 5%	RA1, < RA7 on CB / R22 on MB
	13819131RI	UNINFL.RES.	10 OHM 0.6W 5%	R8 on CB
⚠	13819302RI	RESISTOR	150 OHM 1W 10%	R7, R8 on MB
⚠	J3809139	WIRE RES.	2.2 OHM 3W 10%	R27 on MB

CAPACITOR

	J3519117	CERAM.COND.	4.7N 25V 20%	C69 on MB
	13529147RI	CAPAC.ARRAY	8X100 PF	CA1 on MB
	13649668RI	ELECTRL.COND.-H	47UF 25V	C3 on CB
	13639154	ELECTRL.COND.-V	1000UF 16V	C36, C46 on MB
	J3629134	ELECTRL.COND.-V	2200UF 16V	C7, C11 on MB
	13639661RI	ELECTRL.COND.-V	2200UF 25V	C2 on MB
	13649662RI	ELECTRL.COND.-V	3300UF 25V	C1 on MB
	J3629103	ELECTRL.COND.	100U 25V P5	C37, C53, C54, C67, C3 on MB
	J3629133	ELECTROL.COND.	22U 25V P5	C6, C10 on MB
	J3629104	ELECTRL.COND.	10U 50V P5	C8, C4, C24, C35, C41 on MB
	J3629105	ELECTRL.COND.	47U 50V P5	C5, C9, C12, C38, C56, C63, on MB
	J3629106	ELECTRL.COND.	4.7U 63V P5	C25, C26, C62 on MB
	J3629107	ELECTRL.COND.	1UF 100V P5	C27 < C32, C55 on MB
	J5369101	CHIP COND.	22U 16V ELECTR.	C12, C13, C14, C15 on CPU
	13649103J0	UNPOL.COND.	10U 16 P5	C39, C40, C42, C43, C44, C45, on MB

INDUCTOR, COIL, FILTER

<<EMI>>	12449382RI	NOISE SUP.	PLT1-R53C	L4 on MB
<<EMI>>	12449370	NOISE SUP.	SBT-0160W	L9, L11, L12 on MB
<<EMI>>	12449326	NOISE SUP.	SBT-0460	L10 on MB
<<EMI>>	13529187	NOISE SUP.	ELKTR391CA	FL1, FL2, FL3, FL4, FL5, FL6, FL7, FL8, FL9, on MB
<<EMI>>	12449380	NOISE SUP.	EXC-ELDR25V	L1, L2, L3, L5, L6, L7, on MB

CRYSTAL, RESONATOR

	15299180	QUARTZ 24 MHZ

CONNECTOR

	13419677RI	16P FEM. CONN. AMP 1.27
	13369688RI	4P MALE CONN. P 2.5 M
	J3459102	FEM. TERMINAL 4089C CON. P.2.5

WIRING, CABLE

	7695506000	4-CBL ASSY (20/86) W(4PC)	CN3 on MB to speakers

SCREW

	J2289122	SELF TAP.SCREW 2.2X 6 TC TC
	J2289121	SELF TAP. SCR. 2.2X10 C.C
	J2289126	SELF TAP.SCREW 2.9X 8 TCTCPRBZ
	J2289125	SCREW 2.9X10 TC TC PR TROP
	J2289130	SCREW 2.9X13 TC TC PR TROP
	J2289197	SCREW MM 2.9X19 TC TC PR TROP
	J2289108	SELF LOCK.SCREW M3X10 TCTC H.6
	J2289115	SELF TAP.SCREW 3.5X9.5 TCPRTFR H.8

PACKING

	K2638128	RIGHT POLYSTERENE END-SIDE	
	K263815401	RIGHT POLYST. END-SIDE	
	K267810702	CARTENE ENVELOPE HD CM.44X120	
#	K2618168	OUTER PACKING	E-28

MISCELLANEOUS

	K2168102	SPACER FOR LED H.2.8 D.E. 5.5	
	K2168107	SPACER F/LED H.8.8 HEX.	
	J2359101	SPACER 3M ART. SJ5012	
	J2159102	PLASTIC RIVET SR3055	
	1342982301	POWER SUPPLY SOCKET HOLDER Nø 2	
#	K2268144	VIBRATION DAMPER PL30N (BLACK)	
	K2258113	MYLAR SHIELD MM 160X59.5	

ACCESSORIES

#	K6018256	OWNER'S MANUAL (I/E/D/F)	E-28
#	K6018254	OWNER'S MANUAL (J/E/D/F)	E-28
#	K6018252	MIDI IMPLEMENTATION MANUAL	E-28
	K6018109	MIDI GUIDE	
	K2198102	MUSIC REST	
	22208320	MUSIC SCORE HOLDER	
	K2448110	POWER ADAPTOR ACO 100V 1 A	(100V)
	K2448109	POWER ADAPTOR ACO 120V 1 A	(117V)
	K2448106	POWER ADAPTOR ACO 230V 1 A	(230V)
	K2448107	POWER ADAPTOR ACO 230VE 1 A	(230VE)
	K2448108	POWER ADAPTOR ACO 240VA 1 A	(240VA)

IDENTIFYING VERSION NUMBER

Hold "**TONE2**" button while powering on the instrument, the display will show the current Software ROM Version Number.

es.: **1 0 0**

Power OFF the instrument to Exit from this display.

TRANSLATION FROM ENGLISH INTO JAPANESE

バージョンの確認方法

"ＴＯＮＥ２"ボタンを押しながら電源を入れます。
ディスプレイに現在のＲＯＭバージョンが表示されます。

es.: 1.00

電源を切ると、このモードから抜けることができます。