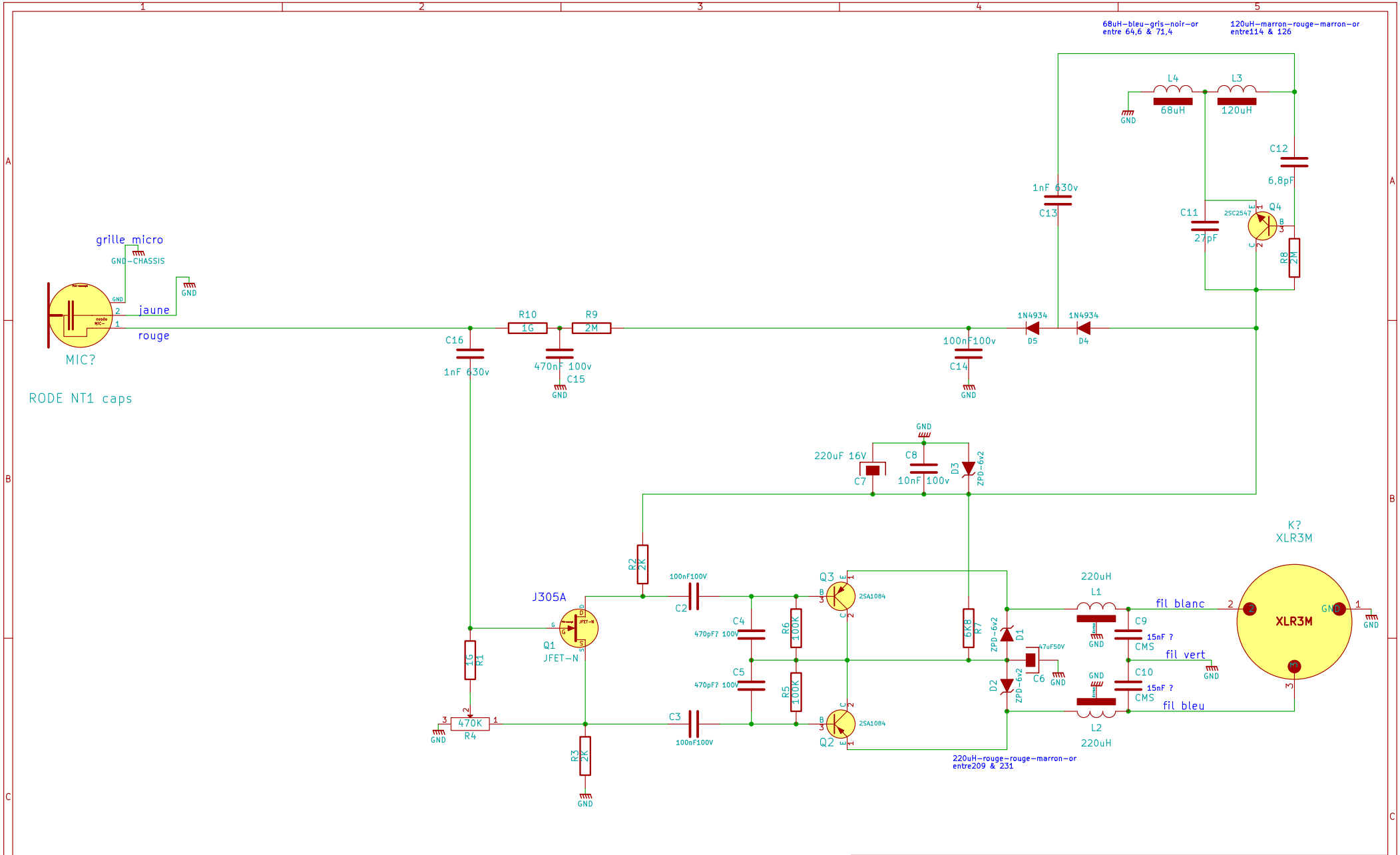

PLG-concept		
File: rode nt1 miroir révision 1.sch		
Sheet: /		
Title: relevé schéma sur microphone rode nt1		
Size: A4	Date: 23 mar 2013	**Rev:**
KiCad E.D.A. eeschema (2012-01-19 BZR 3256)-stable		Id: 1/1