# RACK INTERFACE™

## OWNER'S MANUAL

May be covered by one or more of the following:
U.S. Patents #4538297, 4647876, 4696044,
4745309, 4881047, 4893099 and 5124657.
Other patents pending.
Foreign patents pending.

ROCKTRON
GUITAR RACK TECHNOLOGY

# Contents


1. INTRODUCTION ..... Pg. 1

2. FUNCTIONS OF THE RACK INTERFACE™ ..... Pg. 3
   1. MONO THRUS ..... Pg. 3
   2. WAH-WAH ..... Pg. 10
   3. DUAL STEREO LINE MIXER ..... Pg. 12
   4. DIRECT/BALANCED CIRCUIT ..... Pg. 13
   5. HEADPHONE OUT/MONITOR IN ..... Pg. 14
   6. STEREO THRUS ..... Pg. 14
   7. MIDI THRU/PHANTOM POWER ..... Pg. 15
   8. STEREO VCA ..... Pg. 15

3. BASIC RACK INTERFACE LAYOUT ..... Pg. 16

4. SAMPLE CONFIGURATIONS ..... Pg. 17
   1. CONFIGURATION "A" BLOCK DIAGRAM ..... Pg. 17
   2. CONFIGURATION "A" SIMPLIFIED SCHEMATIC ..... Pg. 18
   2. CONFIGURATION "B" SIMPLIFIED SCHEMATIC ..... Pg. 19
   2. CONFIGURATION "C" SIMPLIFIED SCHEMATIC ..... Pg. 20
   2. CONFIGURATION "D" SIMPLIFIED SCHEMATIC ..... Pg. 21
   2. CONFIGURATION "E" SIMPLIFIED SCHEMATIC ..... Pg. 22

5. SPECIFICATIONS ..... Pg. 23

# 1. Introduction

The Rocktron Rack Interface™ is a unique tool designed to equip guitarists and custom rack builders with many of the specialized features found in custom-designed professional guitar racks - all in a single rack-space package for both convenience and efficiency. The Rack Interface™ includes such features as:

*Six (6) Mono Splitter/Thrus*

*Four (4) Stereo Thrus*

*Dual Stereo Line Mixer*

*Remote Wah-Wah*

*Stereo VCA*

*Headphone Amplifier w/Monitor Input*

*Stereo Speaker Simulator*

*Stereo Balanced XLR Direct Outputs*

The Rack Interface™ can be configured many different ways for a wide variety of purposes. This operating manual will introduce you to the basic functions of each of its features. After reading this manual carefully, please keep it for future reference.

After removing the Rack Interface™ from the box, save all the packing materials in case it becomes necessary to ship the unit.

## *PRECAUTIONS*

NOTE: IT IS VERY IMPORTANT THAT YOU READ THIS SECTION TO PROVIDE YEARS OF TROUBLE FREE USE. THIS UNIT REQUIRES CAREFUL HANDLING.

All warnings on this equipment and in the operating instructions should be adhered to and all operating instructions should be followed.

Do not use this equipment near water. Care should be taken so that objects do not fall and liquids are not spilled into the unit through any openings.

The power cord should be unplugged from the outlet when left unused for a long period of time.

DO NOT ATTEMPT TO SERVICE THIS EQUIPMENT. THIS EQUIPMENT SHOULD BE SERVICED BY QUALIFIED SERVICE PERSONNEL ONLY. DO NOT MAKE ANY INTERNAL ADJUSTMENTS OR ADDITIONS TO THIS EQUIPMENT AT ANY TIME. DO NOT TAMPER WITH INTERNAL ELECTRONIC COMPONENTS AT ANY TIME. FAILURE TO FOLLOW THESE INSTRUCTIONS MAY VOID THE WARRANTY OF THIS EQUIPMENT, AS WELL AS CAUSING SHOCK HAZARD.

## *POWER REQUIREMENTS*

This unit accepts power from the 9VAC/1500mA adaptor supplied with the unit. This 9V RMS AC voltage is internally processed by a voltage doubler, thus generating a bi-polar ±15V to maintain the headroom and sound quality of professional, studio quality equipment. Using an external power source such as this minimizes excessive noise and hum problems often associated with internal transformers, providing optimal performance for the user.

Note: Problems may occur if there is a low line voltage while using headphones providing less than 150Ω impedance. Headphones providing an impedance as low as 8Ω may be used, but 600Ω headphones are recommended for best performance.

## *OPERATING TEMPERATURE*

Do not expose this unit to excessive heat. This unit is designed to operate between 32° F and 104° F (0° C and 40° C). This unit may not function properly under extreme temperatures.

# 2. Functions of the Rack Interface™

The Rack Interface™ can be divided into eight individual functions, these are:

- (6) 1/4" Mono THRUs
- Wah-Wah
- Dual Stereo Line Mixer
- Direct/Balanced circuit
- Headphone Out/Monitor In
- (4) 1/4" Stereo THRUs
- MIDI Thru/Phantom Power
- Stereo VCA

The remainder of this section will detail each function individually and provide block diagrams, configuration diagrams, etc. where necessary.

## 1. (6) 1/4" MONO THRUs:

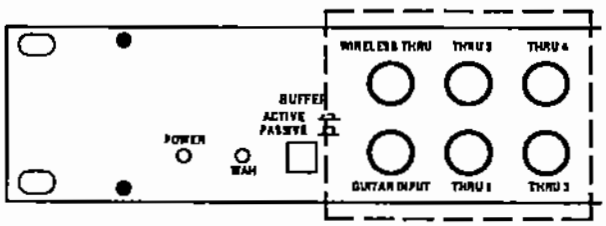


*Rack Interface front panel Mono THRU Jacks.*

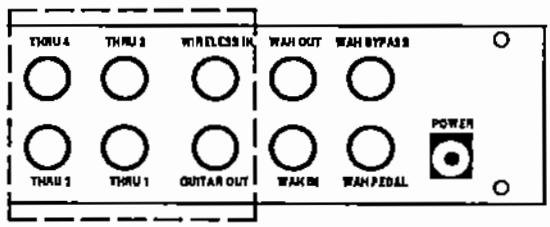


*Corresponding rear panel Mono THRU jacks.*

These mono THRUs incorporate a unique interconnecting system, as each mono jack on the front panel is connected to a corresponding jack on the rear panel. When a signal is input to a front panel mono THRU jack, that same signal and ground connection can now be accessed from the corresponding rear panel mono THRU jack.

In addition, these mono jacks incorporate "normaling" connections. These normaling connections will pass a signal from one set of THRUs to the next when a plug is not inserted into the next set of THRUs. Both signal and ground normaling is provided to help eliminate the possibility of ground loop problems. When devices are connected to the mono THRUs, the normaling connections for each of the mono THRUs used are broken - therefore the ground of each device is not connected to the Rack Interface™.

Because normaling occurs at both the front and rear mono THRU jacks, a plug must be inserted into both the front and rear mono THRUs to break the connection to the previous set of THRUs.

*Wireless Defeat*

The first two of the six mono THRUs can be used in a unique operation called a **Wireless Defeat System**. This system allows for a wireless unit to be plugged into the WIRELESS IN on the back of the unit. The input from the wireless will then be normaled to the GUITAR OUT jack, which is then normaled to THRU 1.

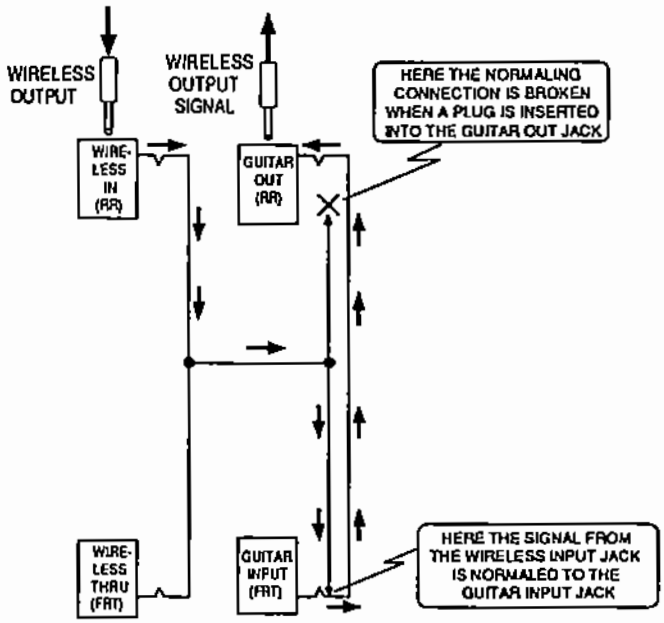


Plugging a guitar directly into the front panel GUITAR INPUT will then disconnect the signal at the WIRELESS IN, and the signal at the rear panel GUITAR OUT will now be the direct guitar instead of the wireless.

Note: A plug must be inserted in the GUITAR OUT jack for the Wireless Defeat System to operate properly.

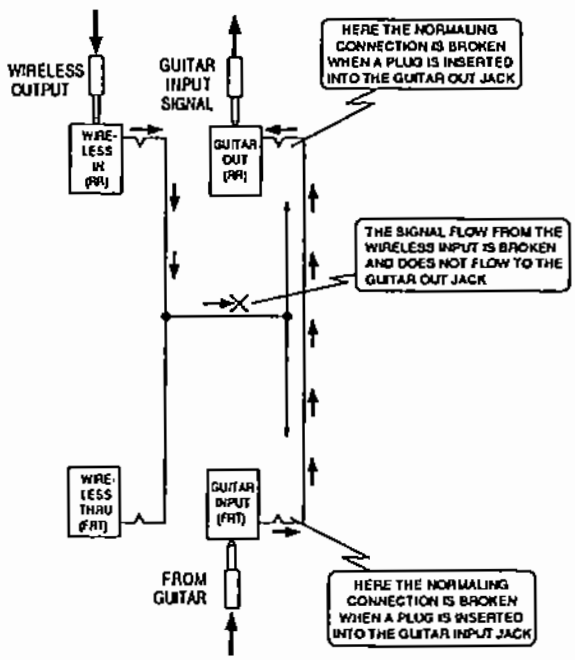

The mono THRUs may be used to route a mono signal from the front of the rack to the back, or vice versa. By inserting a plug into the front and rear jacks of the same THRU, all normaling is broken from the previous set of THRUs.

If a mono THRU is needed, start at THRU 4 by inserting a plug into the front and rear of THRU 4 (this disconnects the normaling from THRU 3). If another mono THRU is needed, insert a plug into the front and rear of THRU 3. By working back from THRU 4, all of the mono THRUS can be used as separate THRUs with no normaling connections made.

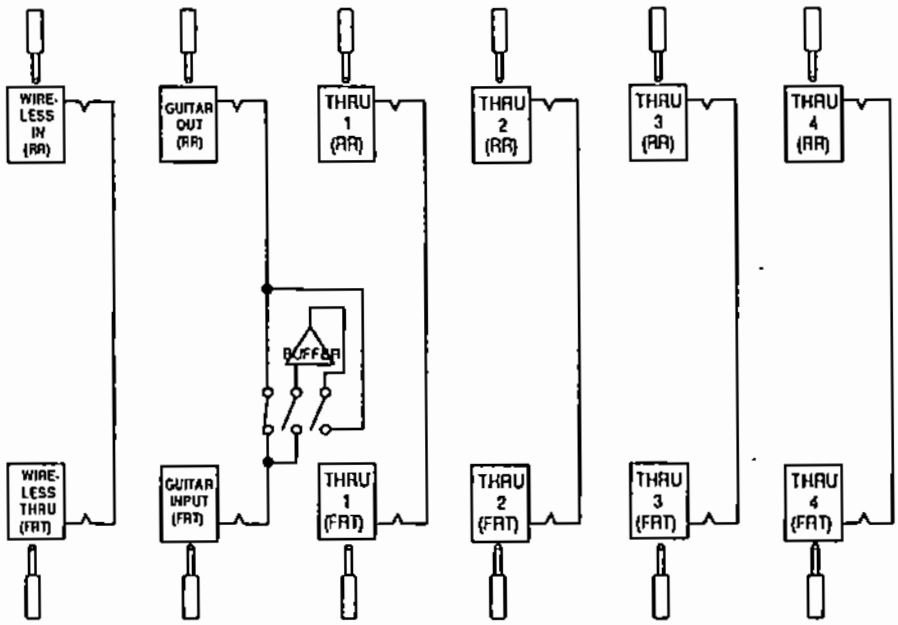


The WIRELESS IN and WIRELESS THRU jacks can also be used as a passive THRU, where the signal may be passed from the front to the back, or the back to the front.

A buffer is available at the GUITAR INPUT to provide enough drive if the guitar itself cannot drive multiple devices. This buffer may be switched in or out by the ACTIVE/PASSIVE switch on the front panel. If high frequencies or overall siganal level is lost, it may be a sign that more signal level is needed. By switching in the front panel Buffer, the high frequencies can be brought back along with any signal loss.

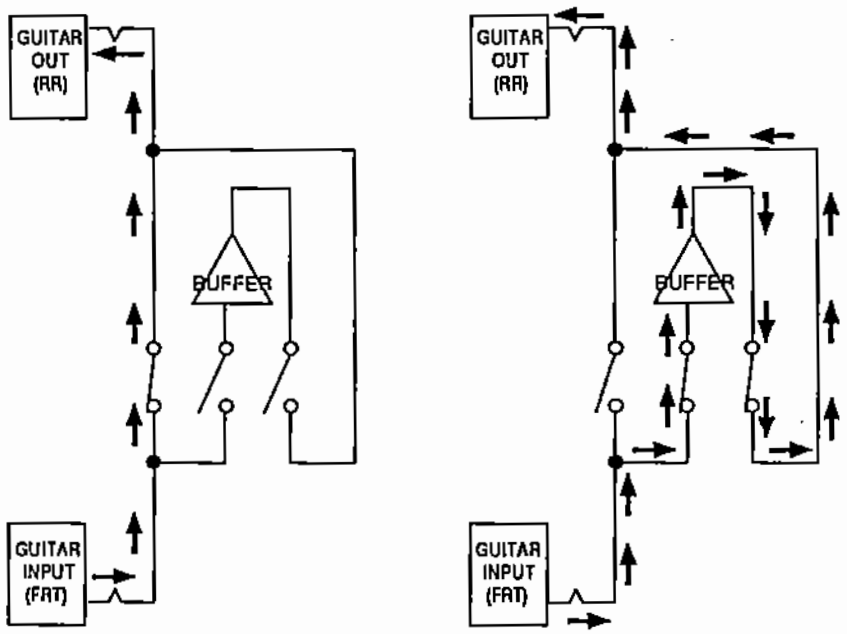


**BUFFER OUT (PASSIVE)** **BUFFER IN (ACTIVE)**

The GUITAR INPUT and GUITAR OUT jacks may be used as a passive THRU only when the ACTIVE/PASSIVE switch is set to "PASSIVE". When set to "PASSIVE", the input may be inserted at either the GUITAR INPUT or the GUITAR OUTPUT. If the ACTIVE/PASSIVE switch is set to "ACTIVE", the input must be inserted into the GUITAR INPUT. Do not insert a signal into the GUITAR OUTPUT jack if the ACTIVE/PASSIVE switch is set to ACTIVE, as this may damage the Rack Interface™ or the unit being plugged into the Rack Interface™.

The unique normaling configuration also allows the mono THRUs to be used as a passive splitter. A passive splitter configuration allows a single input signal, such as the output from a wireless receiver, to be routed to the inputs of multiple preamps and a tuner - all having front-mounted input jacks. The following diagrams illustrate a number of different mono THRU splitter configurations.

**"1 in/6 out" Passive Splitter**
(Buffer must be set to "PASSIVE")

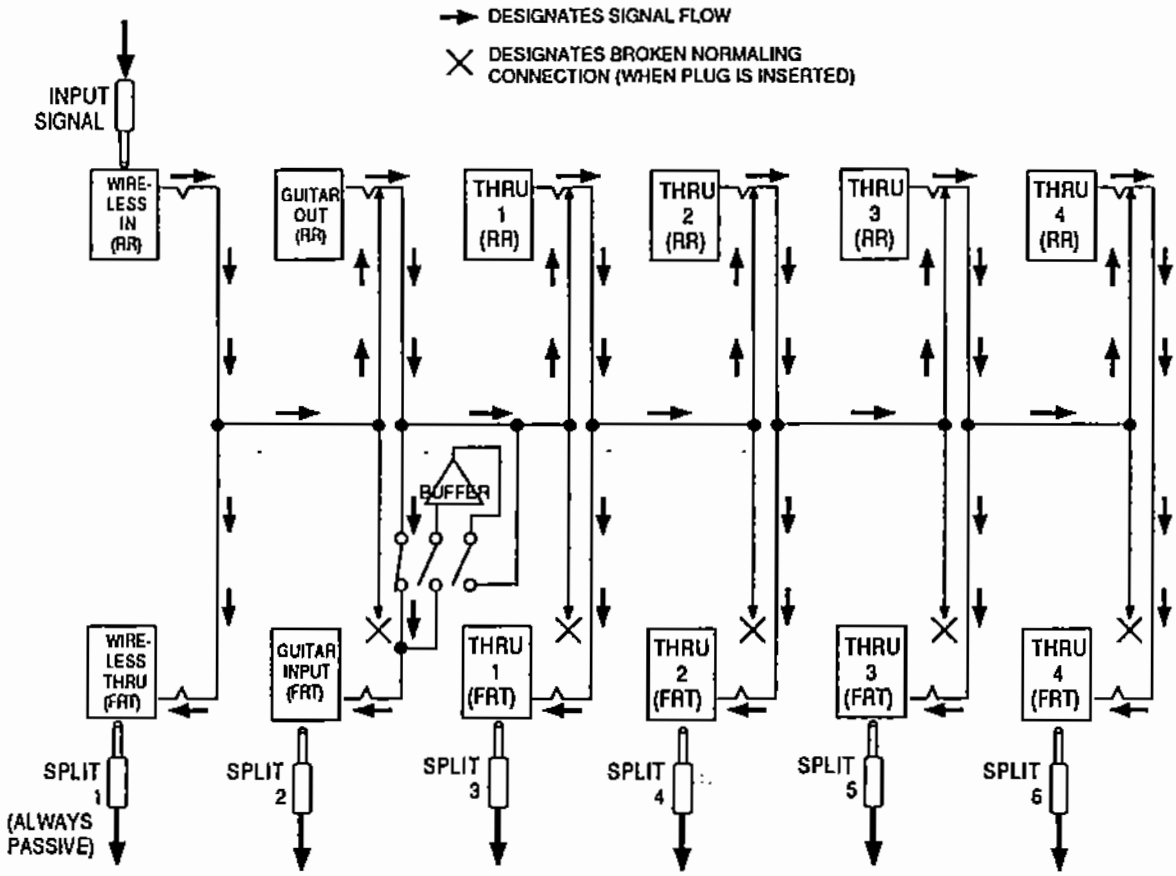


This arrangement could be used as a 1 in/2 out, 1 in/3 out, 1 in/4 out, 1 in/5 out or 1 in/6 out passive splitter.

## "1 in/ 6 out" Passive or Active Splitter (switchable buffer)

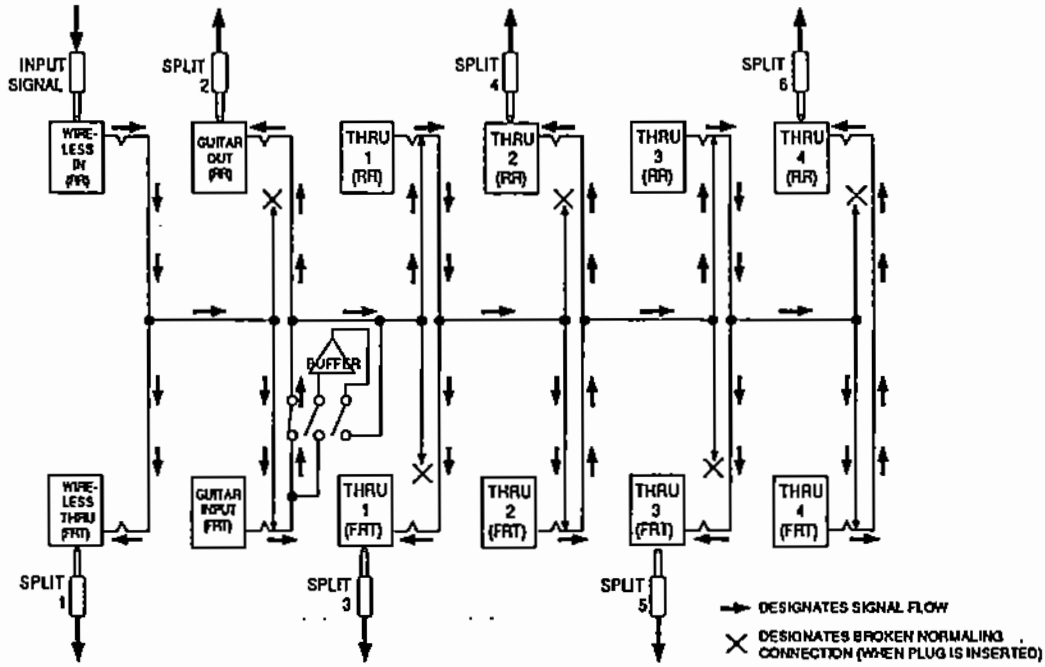


If a plug is not inserted in the front and rear jacks of the same THRU, the signal from the previous THRU will be passed on to the next THRU. (The WIRELESS IN to WIRELESS THRU is the exception, as there is no THRU previous to it).

## 3 "1 in/ 2 out" Passive Splitters

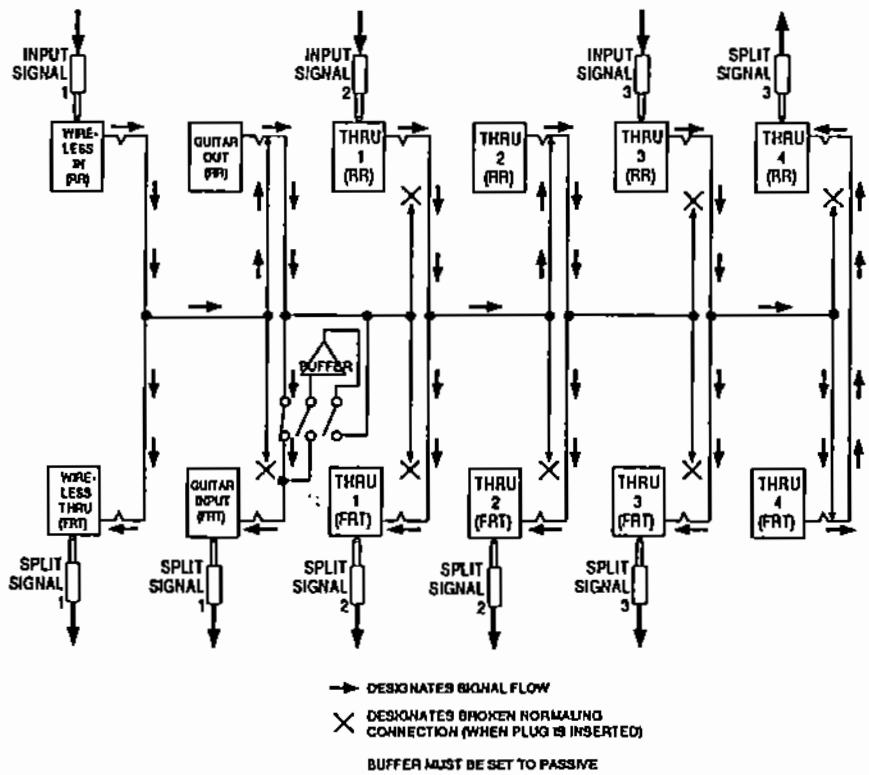


Notice that plugs inserted into the front and rear THRU 1 jacks break the connection from the previous GUITAR IN /GUITAR OUT thru. Also notice that plugs inserted into the front and rear THRU 3 jacks break the connection from the previous THRU 2.

## 2 "1 in/ 3 out" Passive Splitters

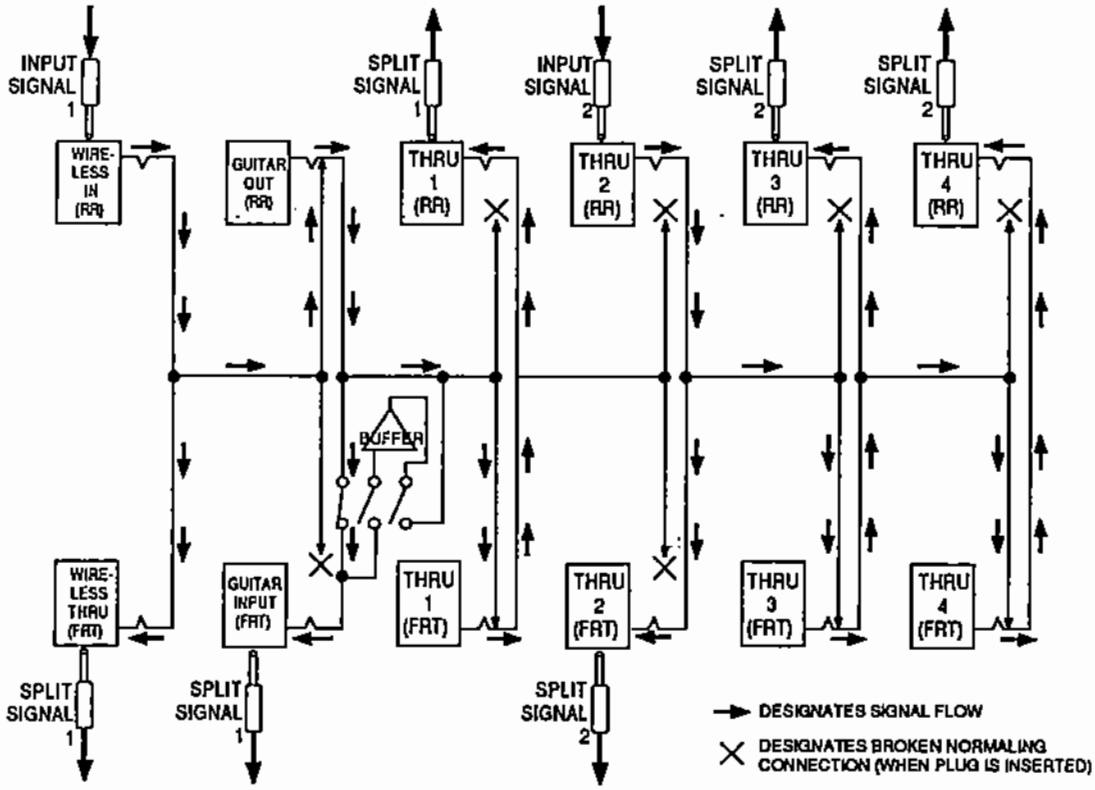


## 1 "1 in/ 5 out" Active Splitter

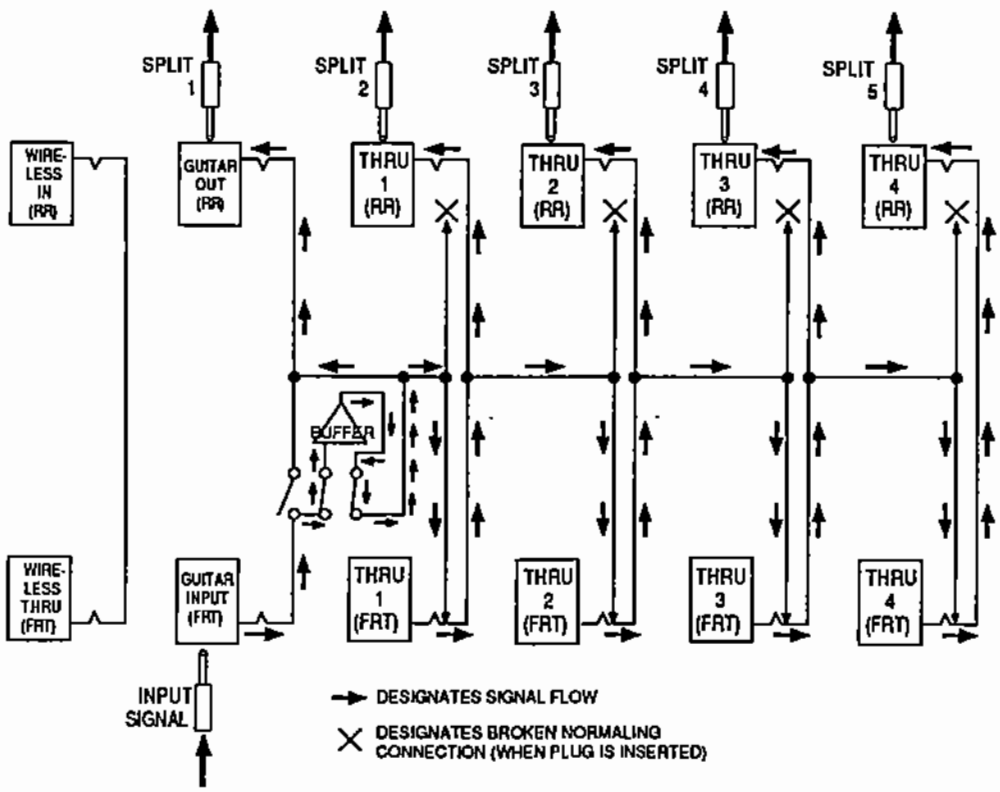

## 2. Wah-Wah:

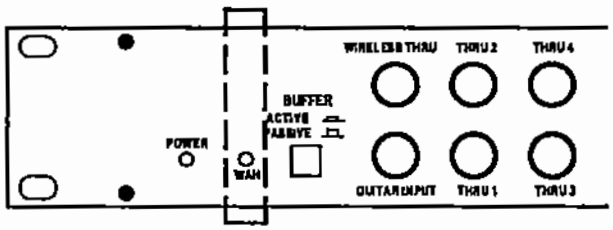


*Front panel Wah LED indicator.*

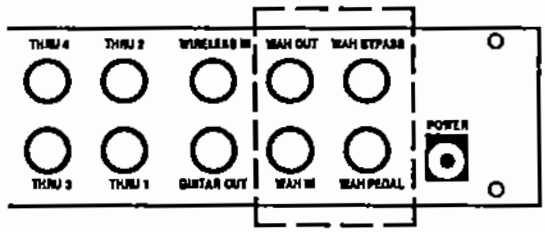


*Rear panel Wah Input, Output, Bypass, and Pedal jacks.*

The Rack Interface™ has a built in Wah-Wah circuit which allows the Wah-Wah circuitry to remain mounted in the rack while only a control pedal need be out on the stage. This means that long cords run out to the stage and back will not induce noise or cause signal degradation.

The WAH IN and WAH OUT allow the Wah-Wah to be placed anywhere in the signal chain. The RTS WAH PEDAL jack connects to the pedal to control the sweeping of the wah.

To bypass the Wah-Wah, plug a latching footswitch into the WAH BYPASS jack. The front panel WAH LED will be lit any time the Wah-Wah is on.

**Simplified Wah Schematic**

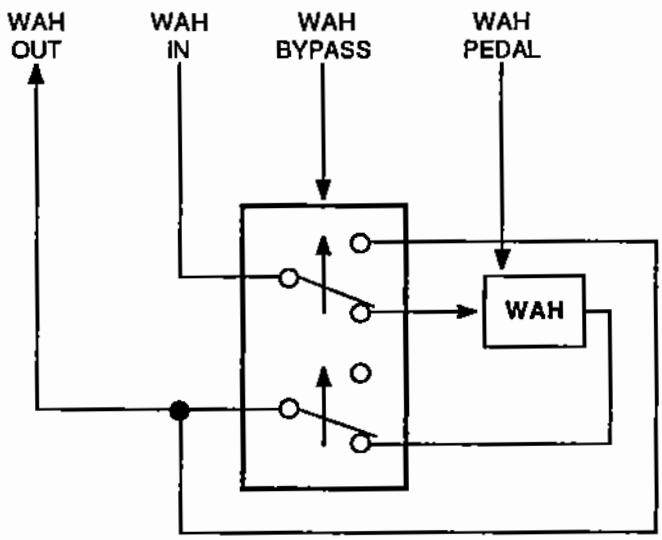

The cord used to connect your expression pedal will depend on the particular model you are using. The WAH PEDAL jack of the Rack Interface™ requires a stereo RTS plug connected to the input and output of the expression pedal, as shown below.

**STANDARD STEREO CORD**

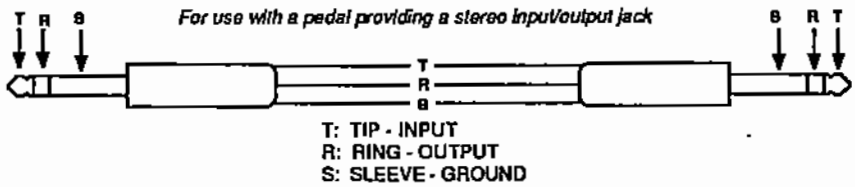


T: TIP - INPUT
R: RING - OUTPUT
S: SLEEVE - GROUND

**TWO MONO TO ONE STEREO CORD**

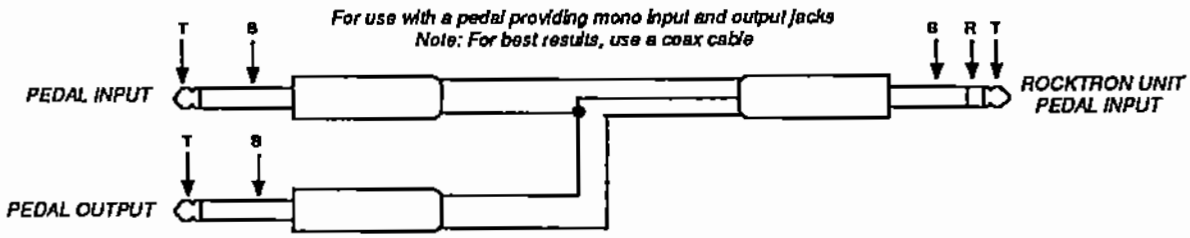


A STEREO "Y" CORD CAN BE MADE USING RCA PATCH CORDS AND 1/4" ADAPTERS, WITH NO SOLDERING INVOLVED

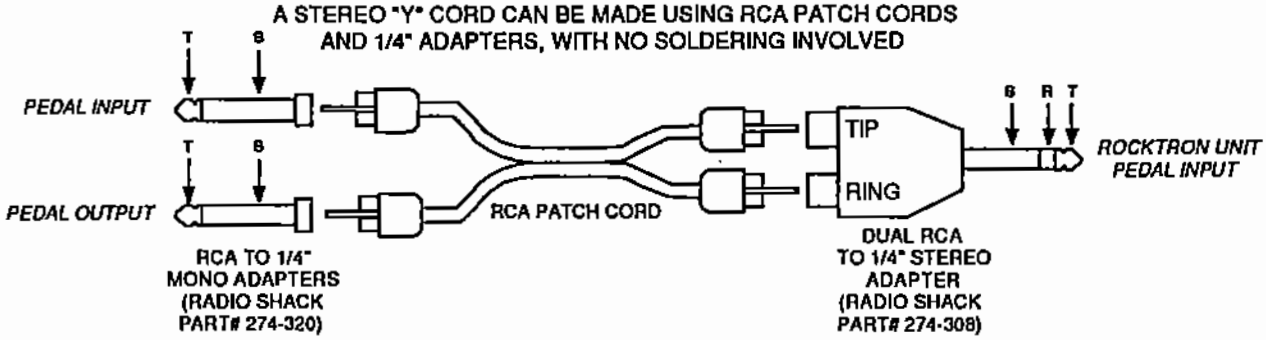


RCA TO 1/4" MONO ADAPTERS (RADIO SHACK PART# 274-320)

DUAL RCA TO 1/4" STEREO ADAPTER (RADIO SHACK PART# 274-308)

## 3. Dual Stereo Line Mixer:

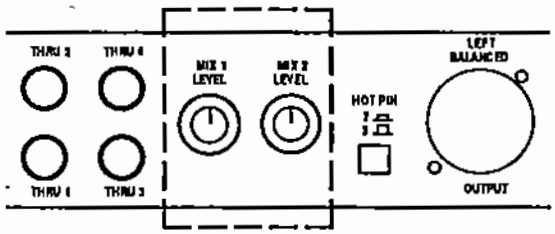


*Front panel Mix Level controls.*

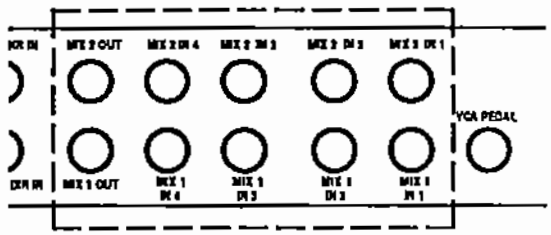


*Rear panel Mixer Inputs and Outputs.*

The Dual Stereo Line Mixer consists of eight (8) stereo inputs and can be used as a single 8-channel stereo mixer or two 4-channel stereo mixers.

The Line Mixer provides two mix level controls which can produce up to +20dB of boost or infinite attenuation.

The rear panel MIX 1 OUT jack is normaled to the MIX 2 input, so if no plug is connected to the MIX 1 OUT jack the summed signals from all the MIX 1 inputs (1-4) will be summed with the MIX 2 inputs. In this condition, the summed MIX 1 signals are still controlled by the MIX 1 LEVEL control.

The mixer utilizes differential inputs to help eliminate potential ground loop problems (this means that no mixer input grounds are tied together).

Each jack for the mixer is stereo Ring, Tip, Sleeve (RTS). The right channel is on the Ring connection, the left channel is on the Tip connection and the ground is on the Sleeve connection. Each input can be used in mono also, with a signal only on the tip.

**Simplified Dual Line Mixer Schematic**

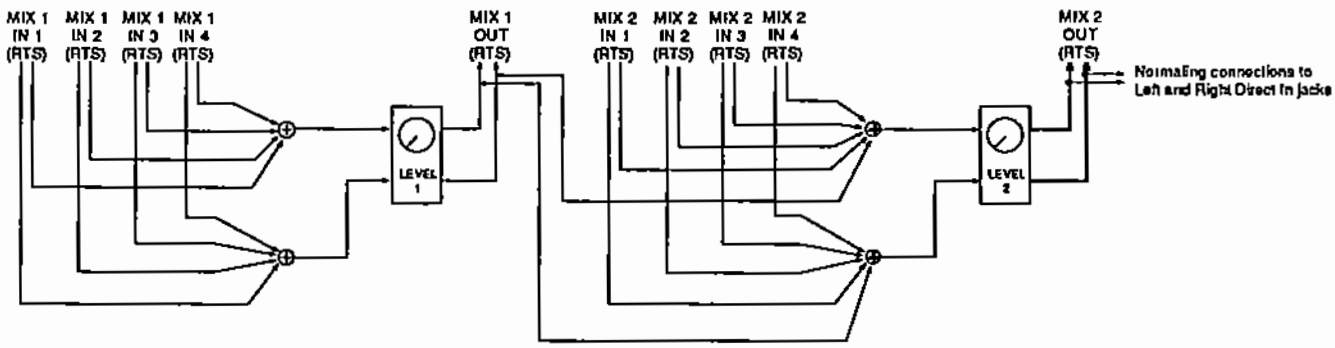


Note: If only Mixer 2 is being used and there is no plug in the MIX 1 OUT jack, turn the MIX 1 LEVEL to "-∞" to prevent the addition of noise to the MIX 2 signal.

## 4. Direct/Balanced circuit:

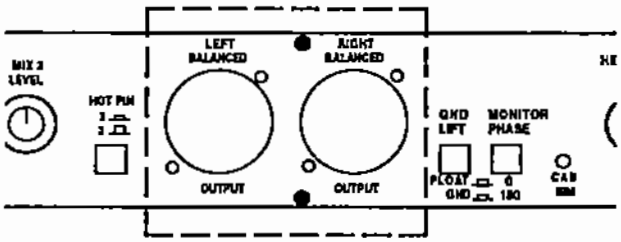


*Front panel Balanced XLR Outputs.*

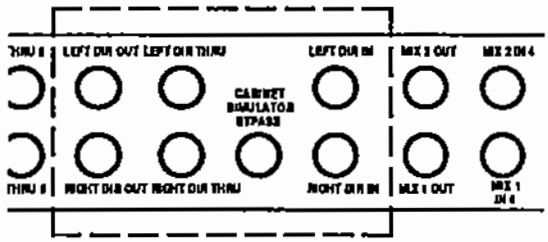


*Rear panel Direct Inputs, Thrus and Outputs.*

This section consists of a left and right input and left and right THRUs as well as left and right XLR balanced and 1/4" outputs. The MIXER 2 outputs are normaled to the direct inputs, so if no plugs are inserted into the DIRECT LEFT and DIRECT RIGHT inputs the MIXER 2 OUT signal will be at the DIRECT INPUTs.

The Direct/Balance circuit contains a latching footswitchable guitar cabinet simulator following the DIRECT INs. An LED on the front panel shows the status of the Cabinet Simulator. When the LED is lit, the Cabinet Simulator is active.

To bypass the Cabinet Simulator, plug a latching footswitch into the CABINET SIMULATOR BYPASS jack.

This section of the Rack Interface™ also has balanced left and right outputs, located on the front panel, to run directly into a mixing console. A HOT PIN selector switch is provided to accommodate balanced inputs with a hot pin on either pin 2 or pin 3. A GROUND LIFT selector is also provided which disconnects pin 1 of both the balanced XLR jacks from the chassis ground of the Rack Interface™ to help avoid ground loop problems.

**Direct/Balanced circuit simplified schematic**

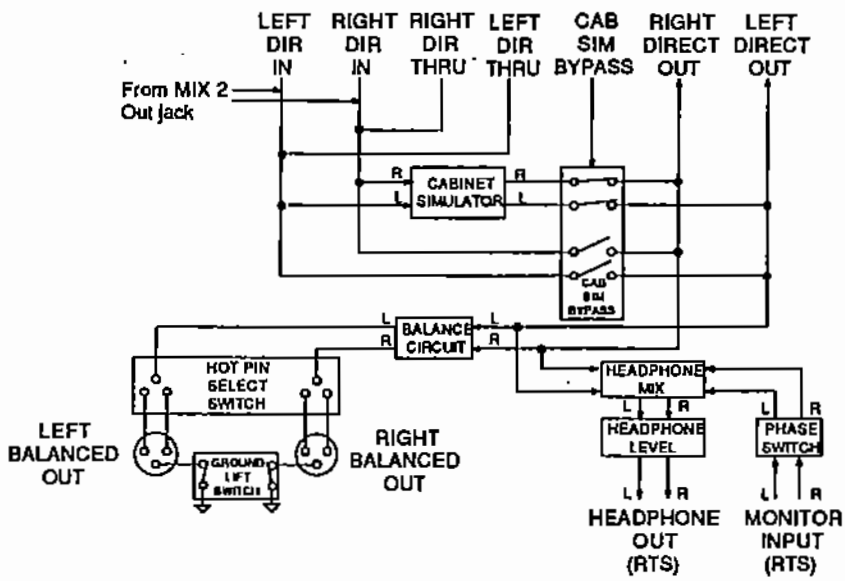

## 5. Headphone Out/Monitor In:

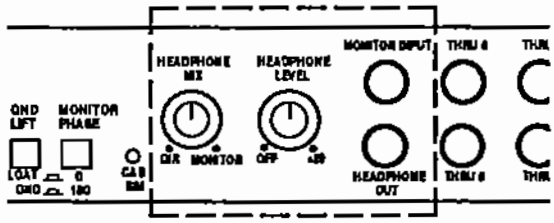


*Front panel Headphone Mix and Headphone Level controls.*
*Front panel Headphone Output and Monitor Input jacks.*

The HEADPHONE OUT allows you to listen to the direct outputs (with or without the Guitar Cabinet Simulator) through a pair of headphones.

Inserting a composite mix (or other signal) into the MONITOR INPUT allows you to mix the direct signal from the Rack Interface™ with the composite signal to create your own individual mix. This feature allows you to adjust the volume of your instrument relative to the composite signal and better monitor your performance.

If no Monitor Input is used, the HEADPHONE MIX control should be turned to full "DIR".




The HEADPHONE MIX control determines the mix between the direct signal and the signal connected to the MONITOR INPUT jack. The HEADPHONE LEVEL control provides a signal level up to +20dB to a pair of 600Ω headphones. In addition, a MONITOR PHASE switch is included to shift the phase of the MONITOR INPUT signal by 180° if phase cancellations should occur. See "CONFIGURATION A" for an example of how to connect this feature to a mixing board.

## 6. Stereo Thrus:

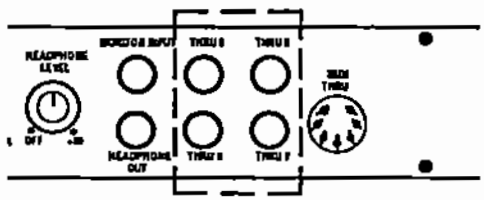

*Front panel Stereo Thru jacks.*

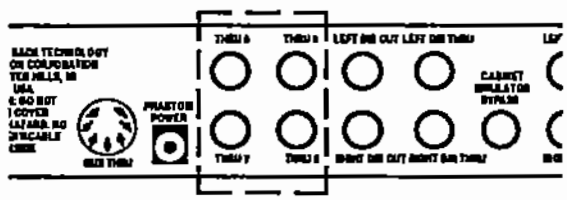

*Rear panel Stereo Thru jacks.*

Thrus 5 - 8 are stereo thrus which may be used to feed a mono or stereo signal from the front to the rear or vice versa. Unlike the mono thrus, these jacks are strictly straight feed-throughs and do not incorporate any normaling.

<u>These jacks are not to be used as power amplifier speaker thrus! Power amp outputs should NEVER be connected to any jack on the Rack Interface™ at any time!</u>

## 7. MIDI Thru/Phantom Power:

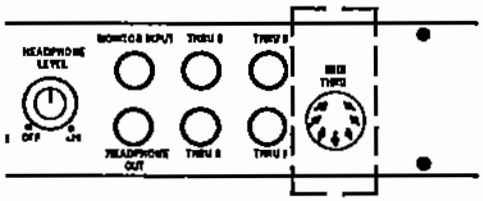

*Front panel MIDI Thru jack.*

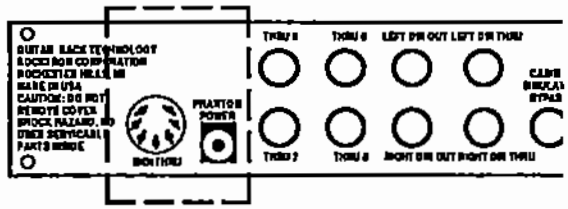

*Rear panel MIDI Thru and Phantom Power jacks.*

The MIDI THRU is a straight THRU that allows for a MIDI signal to be transferred from the front to the rear or vice versa.

The PHANTOM POWER jack applies power to pins 6 and 7 of a 7-pin MIDI cord to power another device, such as a Rocktron MIDI Mate™ foot controller, from your rack instead of running an extention cord. A standard 5-pin MIDI connector may be used with these 7-pin jacks, although pins 6 and 7 will not be connected.

## 8. Stereo VCA:

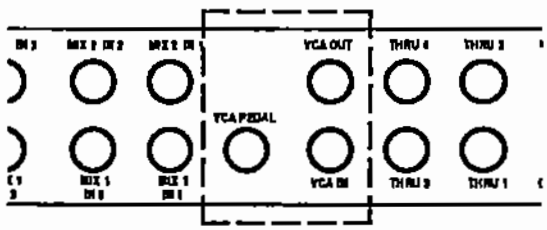


*Rear panel VCA Input, Output and Pedal jacks.*

A VCA is similar to a rack-mounted volume pedal. Conventional volume pedals require that the audio signal be run through a long cord out to the pedal onstage and run back to the rack. This is not desirable because of the increased sensitivity to noise and signal degradation. The VCA provided on the Rack Interface™ keeps the audio in the rack, while the pedal is used to adjust a control voltage which will determine how much the audio signal is attenuated.

The VCA can be patched in at any point in the signal chain via the VCA IN and VCA OUT jacks. These jacks are stereo RTS, and each require a stereo cord such as is shown on page 11. A pedal of any resistive value may be used in the VCA PEDAL INPUT.

# 3. Basic Rack Interface™ Layout

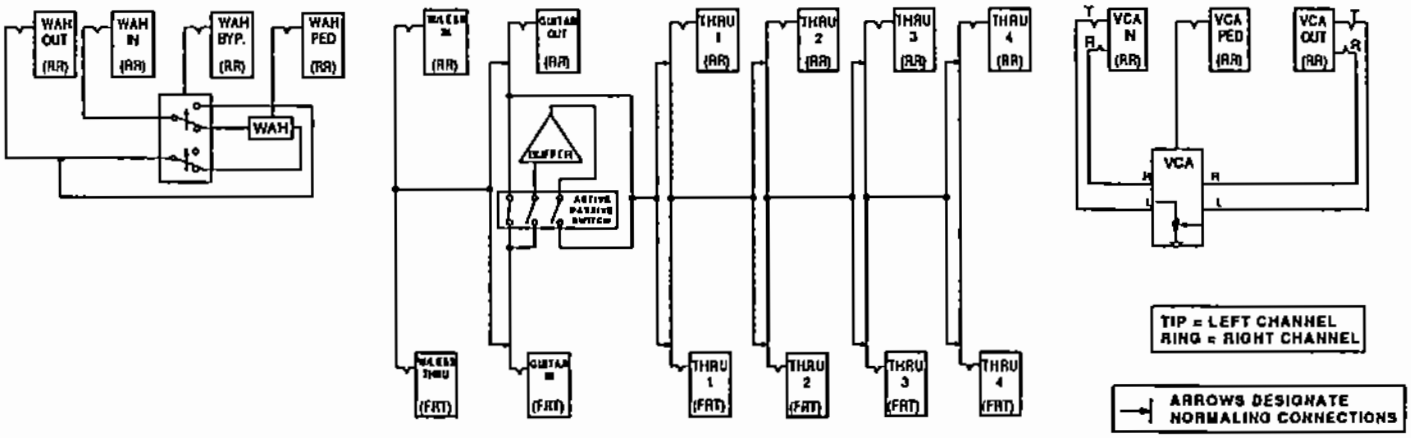


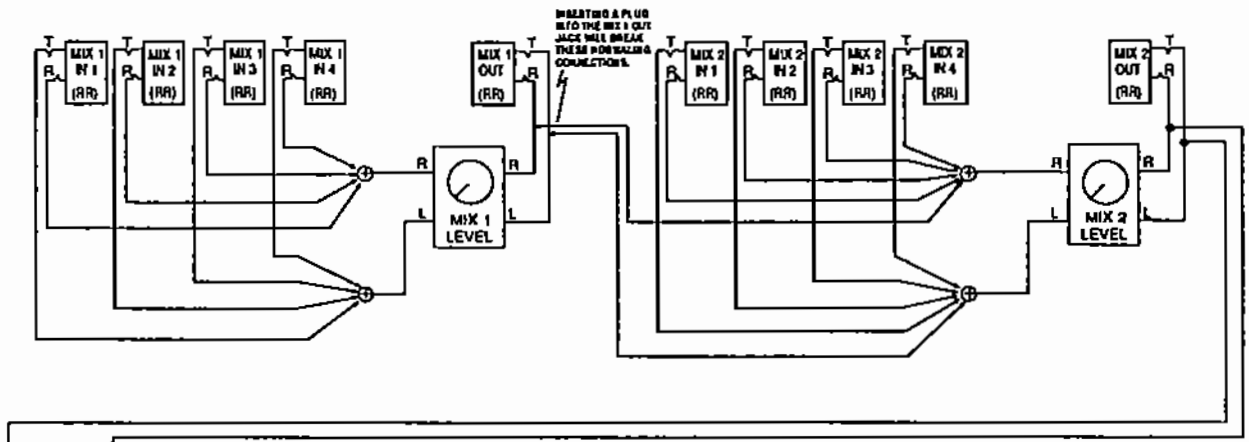


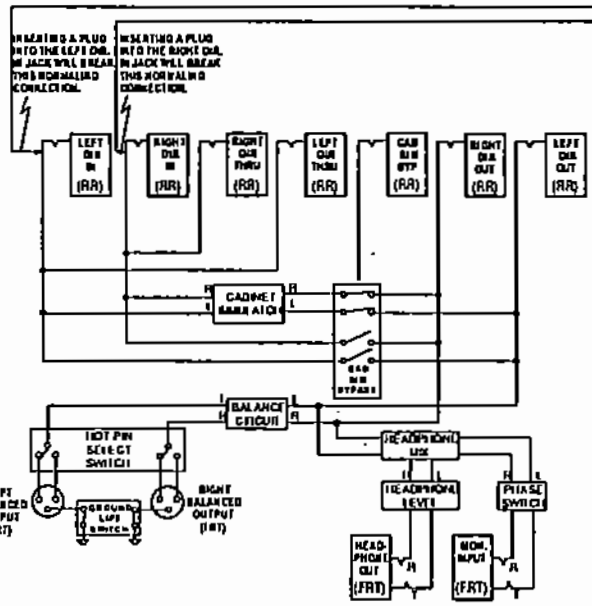


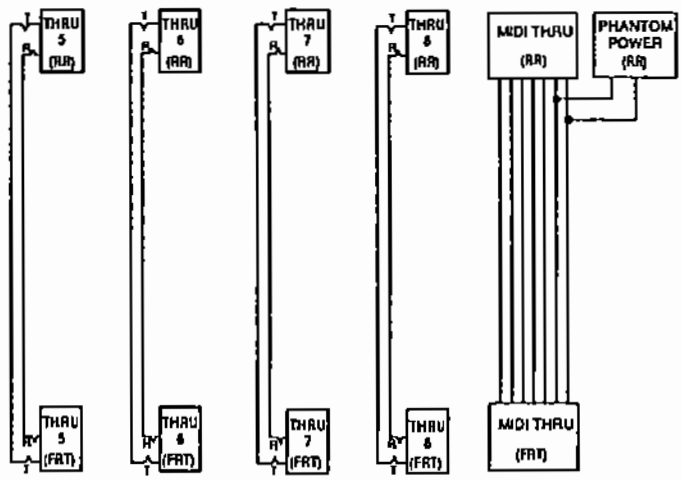

# 4. Sample Configurations

*CONFIGURATION "A" Block Diagram*

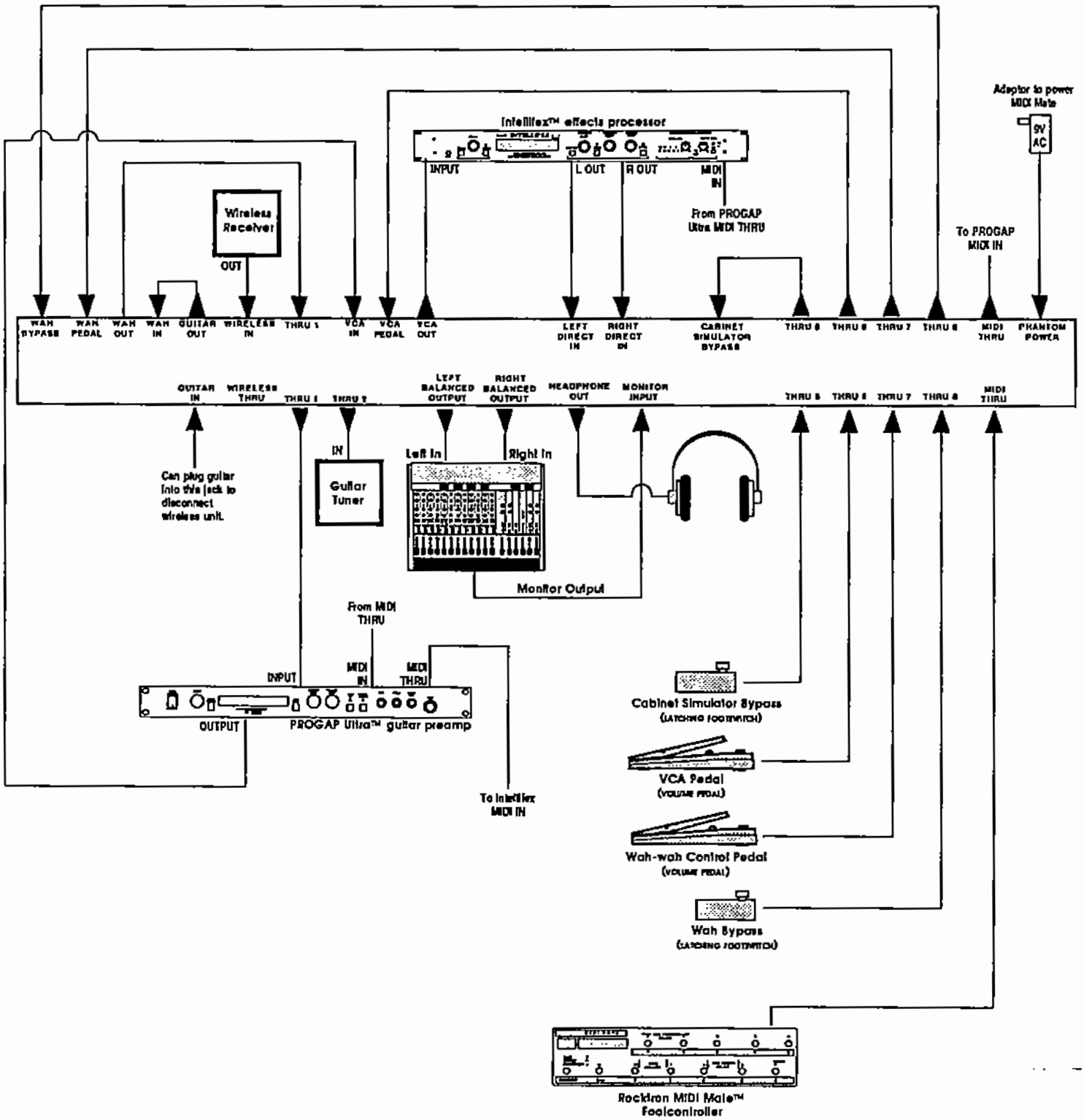

## *CONFIGURATION "A" Simplified Schematic*

This configuration shows how the Rack Interface™ can benefit even a small rack setup by making use of the THRUs, VCA, Cabinet Simulator, Balanced Outputs and Headphone Output.

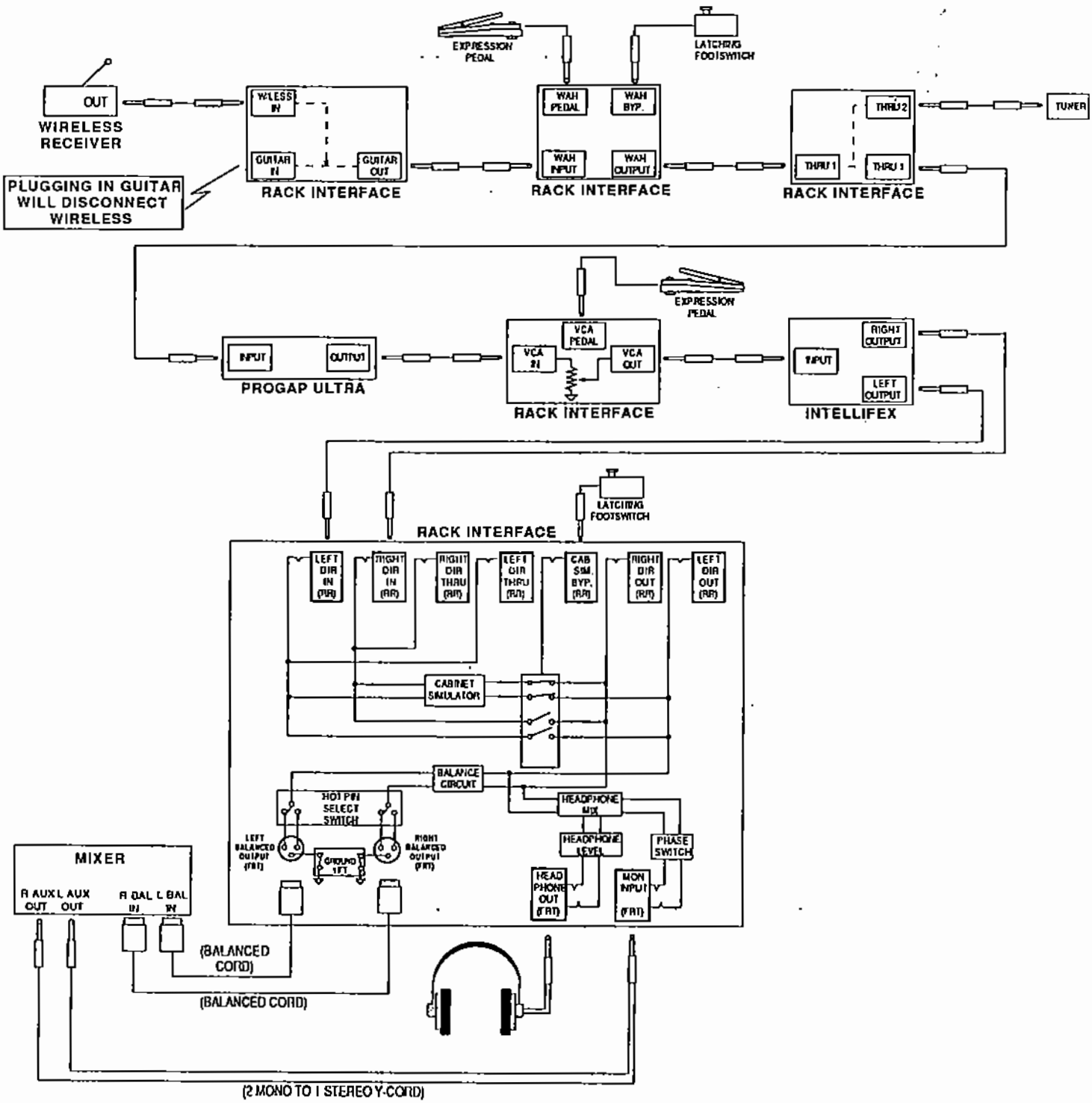

## *CONFIGURATION "B" Simplified Schematic*

This configuration shows how a Rack Interface™ and a Patch Mate™ may be used to switch preamps and effects in and out. This configuration also shows where the VCA would typically be used, as well as how parallel effects can be summed together by the mixers.

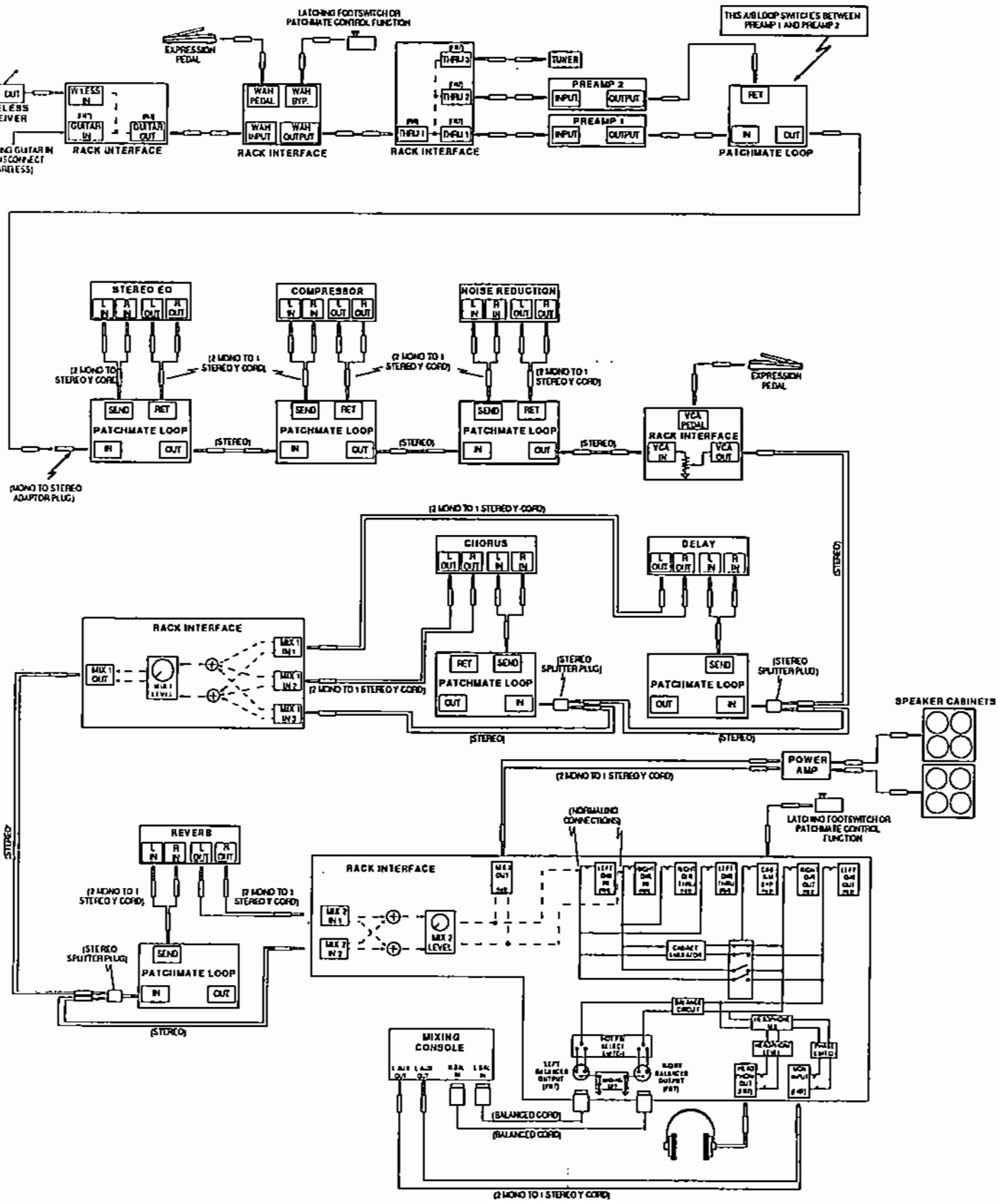

## *CONFIGURATION "C" Simplified Schematic*

This configuration shows another example of how multiple preamps and effects can be switched in and out using the Rack Interface™ and a Patch Mate™.

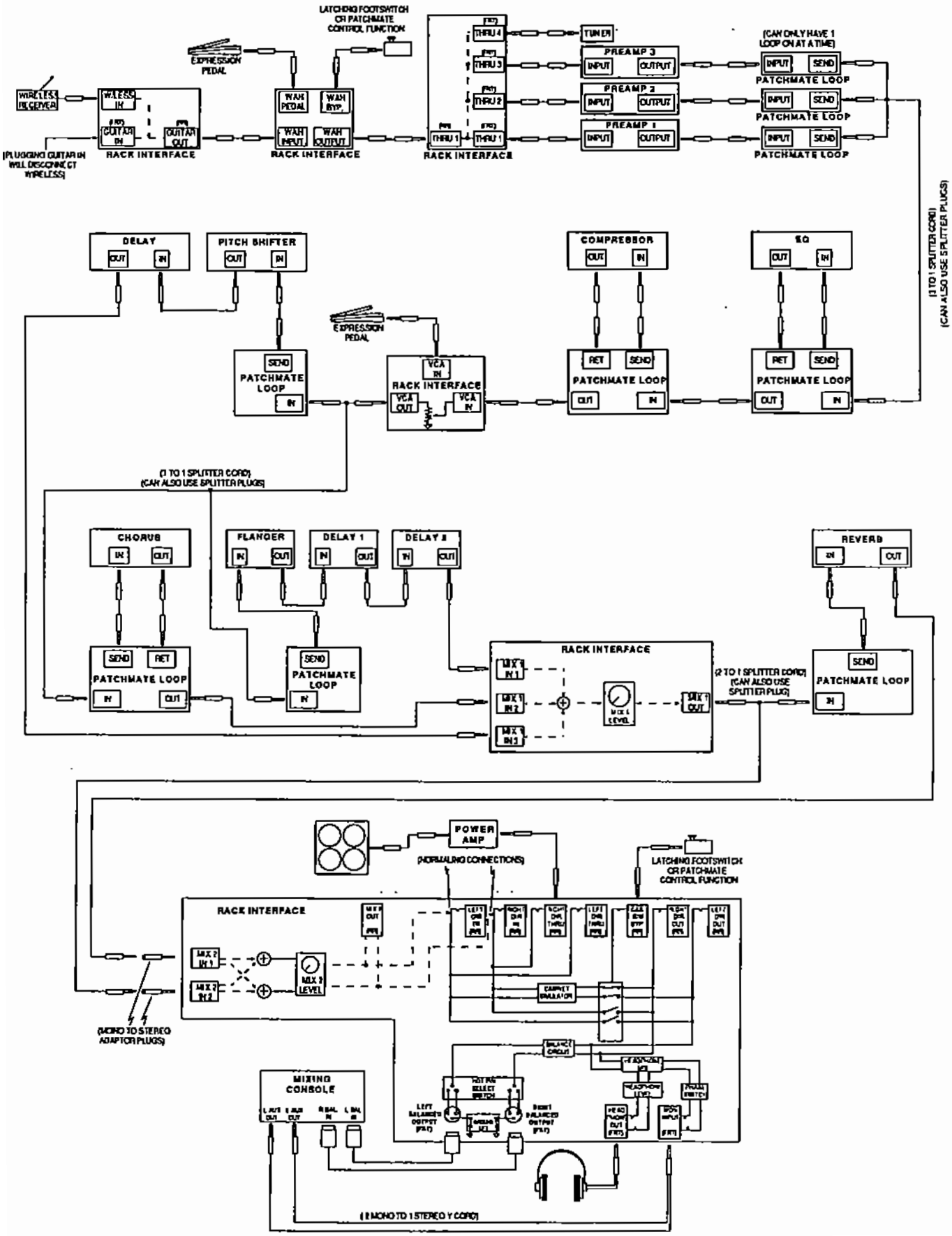

## *CONFIGURATION "D" Simplified Schematic*

This configuration illustrates the added feature of being able to switch the signal path for the left side of the signal. Switching in a second preamp on the left which provides a tonality different from that on the right will provide a greater stereo image than a single-preamp configuration.

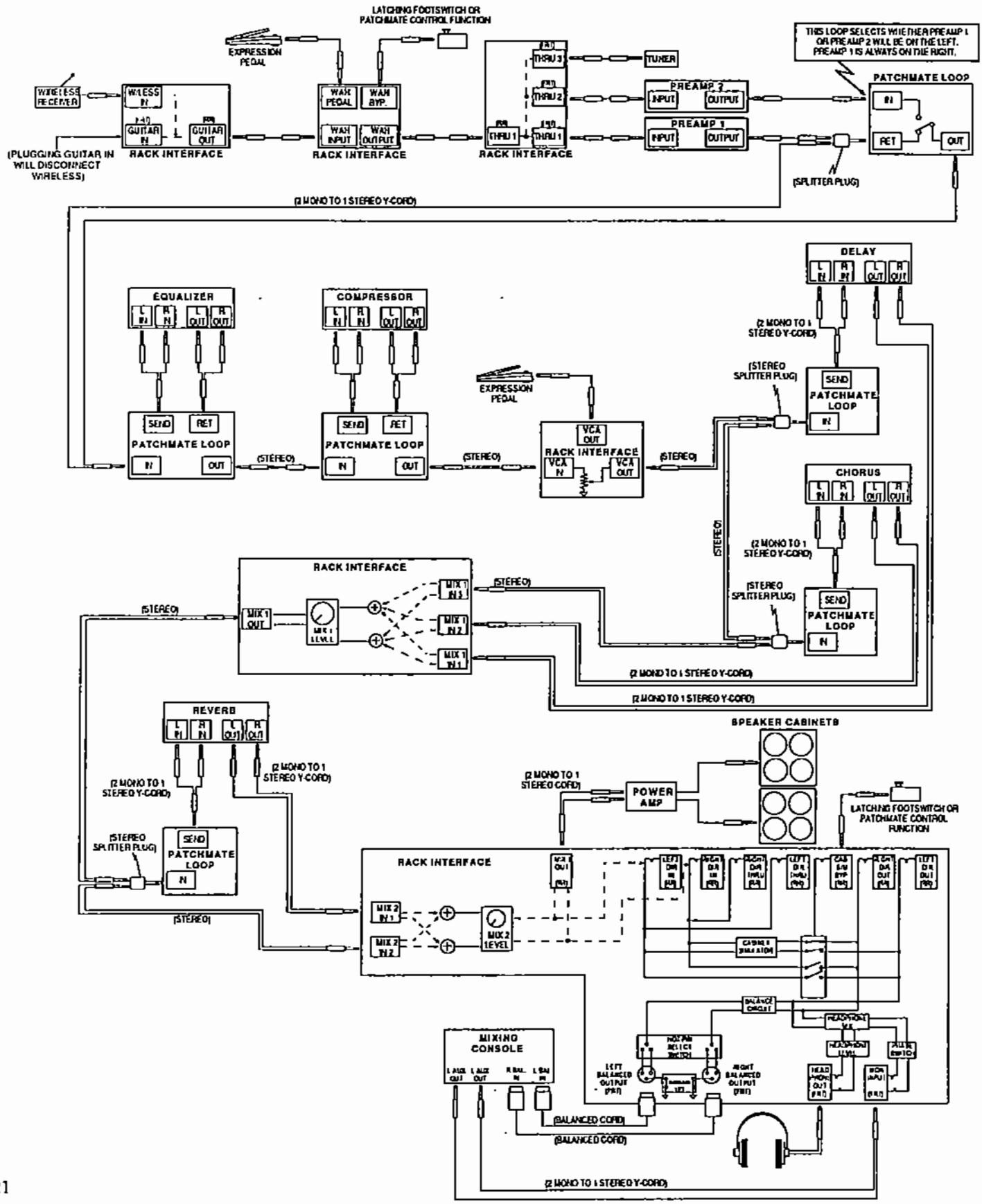

## *CONFIGURATION "E" Simplified Schematic*

This configuration allows for multiple preamps to be switched in at the same time, thereby combining the tones of each of the preamps.

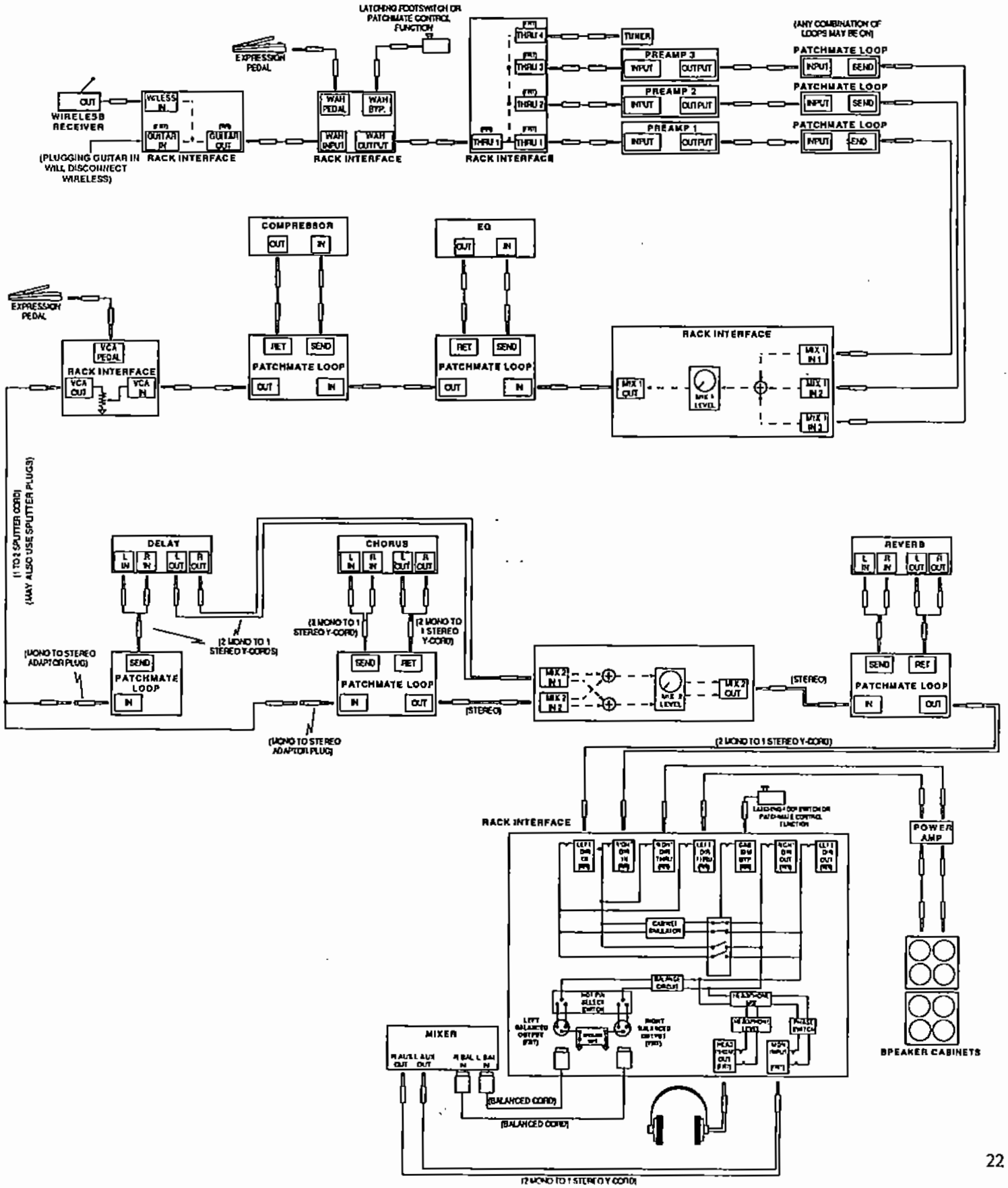

# 5. Specifications

| | |
|---|---|
| **Power Requirements** | 9VAC/1500mA Adapter |
| **Maximum Input Level** | +20dBu (all inputs) |
| **Maximum Output Level** | +20dBu (all outputs) |
| **Maximum Headphone Output Level** | +20dBu @ 600Ω, 100mW |
| | +20dBu @ 150Ω, 400mW |
| | +14.3dBu @ 32Ω, 505mW |
| | +7.25dBu @ 16Ω, 200mW |
| | +1.7dBu @ 8Ω, 111mW |
| **Minimum Headphone Load Impedance** | 8Ω |
| **Input Impedance** | |
| VCA | 300kΩ |
| Wah | 470KΩ |
| Mixers | 20KΩ |
| Direct Inputs | 300KΩ |
| Guitar Input | 470KΩ |
| Monitor Input | 300KΩ |
| **Noise Floor (A-weighted)** | |
| VCA | -93dBu |
| Wah | -92dBu, -120dBu BYPASSED |
| Mixers | -104dBu |
| Headphone Out | -93dBu (CAB. BYPASSED), -92dBu (CAB. IN) |
| Guitar Buffer | -117dBu, -120dBu BYPASSED |
| Direct Outputs | -95dBu (CAB. BYPASSED), -92dBu (CAB. IN) |
| Balanced Outputs | -95dBu (CAB. BYPASSED), -92dBu (CAB. IN) |
| **Total Harmonic Distortion + Noise (@ 1KHz)** | |
| VCA | less than .1% |
| Wah Bypassed | less than .0004% |
| Mixers | less than .001% at unity gain |
| Headphone Out | less than .003% at unity gain |
| Guitar Buffer | less than .0004% |
| Direct Outputs | less than .003% (CAB. BYPASSED) |
| Balanced Outputs | less than .003% (CAB BYPASSED) |
| **Frequency Response (20Hz - 20KHz)** | |
| VCA | ±1dBu |
| Wah Bypassed | ±.1dBu |
| Mixers | ±.1dBu |
| Headphone Out | ±.2dBu |
| Guitar Buffer | ±.1dBu |
| Direct Outputs | ±.1dBu |
| Balanced Outputs | ±.1dBu |
| **Maximum Gain** | |
| Mixer Outputs | +20dBu |
| Headphone Out | +17dBu with 600Ω headphones |
| | (less gain with lower impedance headphones) |

**0dBu = .775V RMS**