RFX Chorus
&
RFX Ultra Chorus

This document describes the following Plug-ins that have been developed for the RFX Card.

- **RFX Chorus** *(thin effect)*
- **RFX Ultra Chorus** *(FAT effect)*

☞ To Install New RFX Plug-ins:

1. Download the new RFX Plug-ins from the E-MU web site.
2. Copy the RFX Plug-ins from your computer to a DOS formatted floppy disk.
3. Insert the floppy disk into your E4 Ultra.
4. Press **Load** from the main E4 screen and select the **floppy** drive.
5. Locate the first Plug-in on the floppy and **Merge** it with the current bank. Repeat for any other Plug-ins on the floppy.
6. Press **Master**, **FX**, **RPlugin**.
7. Select one of the new Plug-ins using the data entry control. (PIXXX)
8. Press the **Copy** function key.
9. Select an empty **Flash** location for the Plug-in (pi100-pi199).
10. Press **OK**. Repeat steps 6-9 for the other new Plug-ins.
11. **Erase** the Plug-ins stored in RAM locations (PI000-PI099).

RFX Chorus & RFX Ultra Chorus

The RFX Chorus and RFX Ultra Chorus are sophisticated variations on the standard chorus effect. The two plug-ins are thin and fat versions of essentially the same algorithm, with the standard Chorus program offering up to 6-voice chorusing and the Ultra Chorus offering up to 16-voice chorusing. Parameters are available for tuning the delay and pitch shift characteristics of the chorus effect as well as to control the number of voices, output panorama width, and I/O mode. The algorithms in both plug-ins are true stereo, processing the left and right input signals independently (except when Series input mode is selected).

The block diagram of the Ultra Chorus Plug-in is shown below.

Ultra Chorus Block Diagram

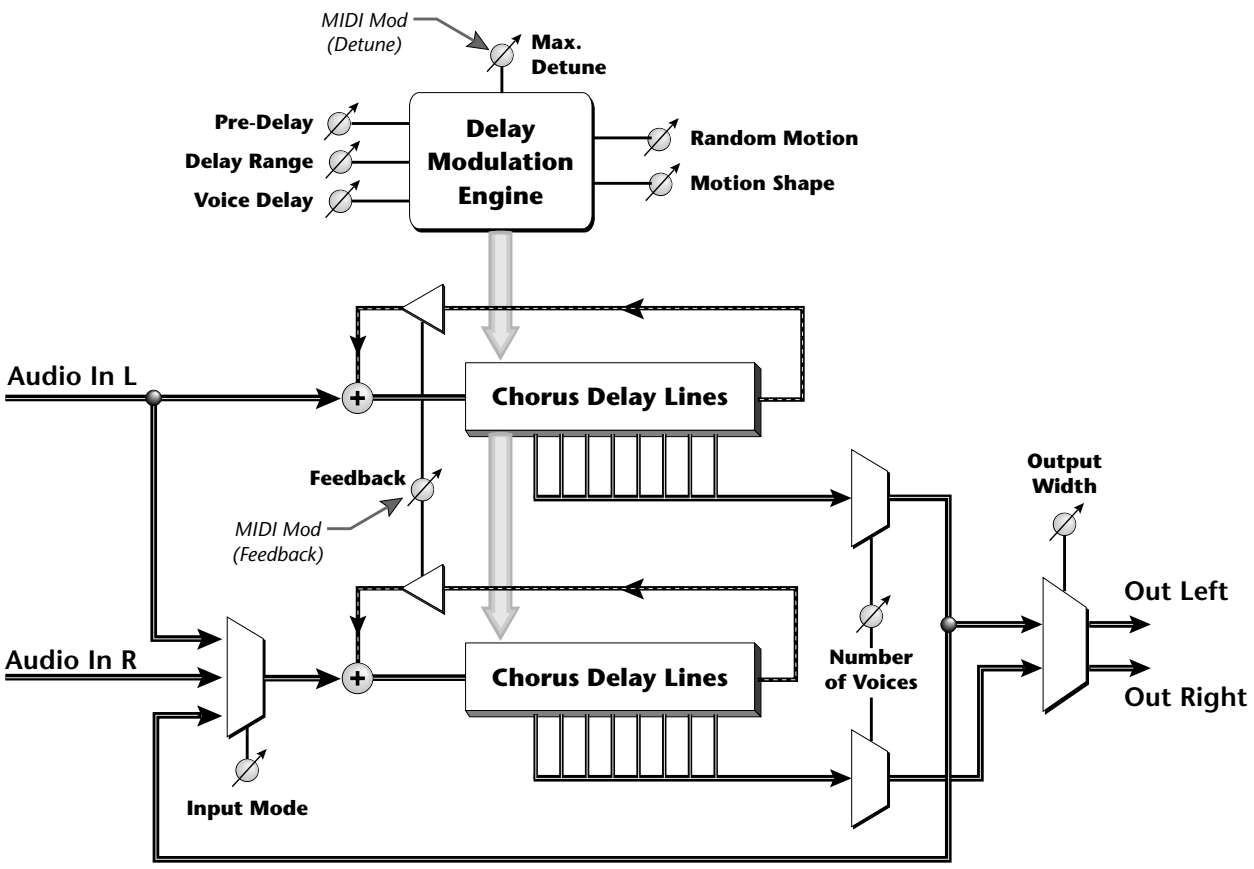

Note that while the plug-ins can be run with 100% effect mix, the algorithms themselves do not contain a “dry” pass-through signal path, and so adjusting the wet/dry effect balance to less than 100% can have a

significant and useful effect on the sound produced by the plug-ins, effectively producing 8 or 18-voice chorusing.

The chorus effect is created by adding time delay and pitch detuning to the signal in order to suggest an ensemble of outputs generated from the single input. The pitch detuning is achieved by slowly modulating the delay time of the processed signal, thus employing the phenomenon of Doppler-shift to achieve both increases and decreases in pitch. Most chorus programs feature a parameter such as “Initial Delay” and then provide parameters such as “Depth” and “Speed” to affect changes in delay and pitch. The RFX Chorus programs focus instead on independent control of the primary sonic qualities of time delay and pitch detuning, while utilizing the same DSP techniques of modulated delay lines that are used in conventional chorus effects. In this approach, the controls over the range of delay times, which contribute to the chorus effect's sense of “spatiousness”, are independent of the control over the amount of pitch detune, which is primarily responsible for effect's timbral qualities.

The RFX Chorus plug-ins use the concept of a chorused voice, which is simply one delayed and detuned copy of the input signal. At any one time, each voice's particular delay time and detune amount are independent of all the other voices' delay and detune. The voice will “wander” more or less regularly (depending on the setting of the Random Motion parameter) along a trajectory between the delay times set by the Pre-Delay and Delay Range parameters. This trajectory is controlled so that changes in delay never cause the amount of pitch-shift to exceed the Max Detune parameter.

The diagram below shows how a single voice with approximately 50% Random Motion and a Motion Shape of Sine might move between the delay limits of 2msec and 12msec; with less randomness the trajectory will look more like a triangle wave, and with more randomness the trajectory will look more “wiggly” and might not reach the delay limits as regularly or as often. The slope of the trajectory will never become so steep that the pitch-shift of the voice exceeds the value of the Max Detune parameter.

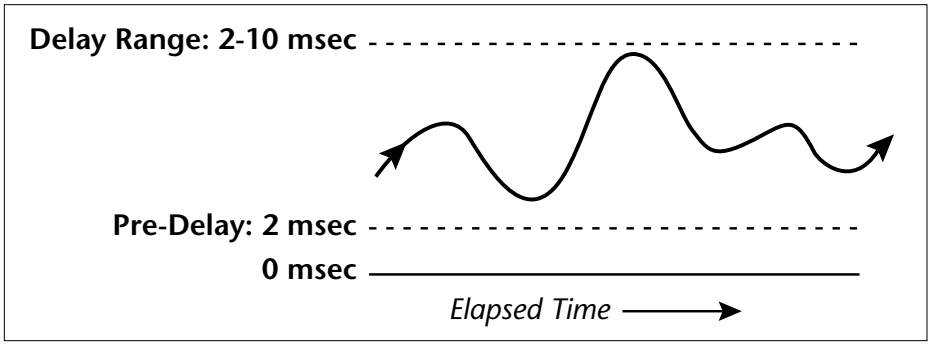

The next diagram shows the same situation with the number of voices increased from 1 to 4. As the four voices criss-cross each other, the rich timbral that changes result from cancellation of the different signals at overlapping delay times are audible.

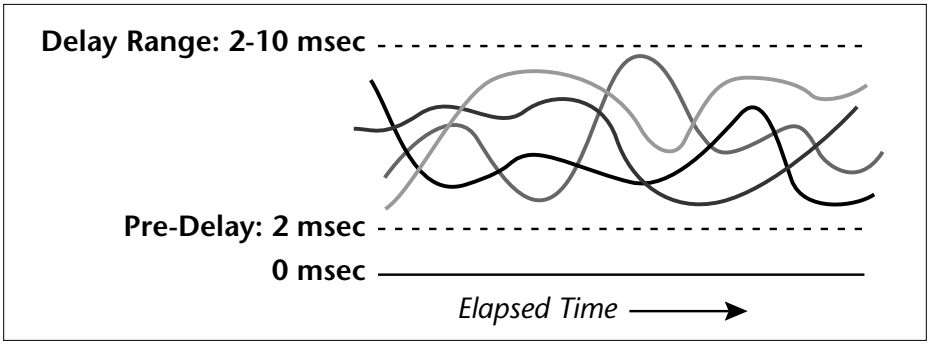

To increase the sense of spatiousness and decrease the timbral changes due to cancellation - to simulate a number of voices spread about a room, for instance - the Ultra Chorus plug-in offers a Voice Delay parameter. The Voice Delay parameter causes an adjustable delay offset to be added between each successive voice; the diagram below shows the result of using a Voice Delay of 10 milliseconds between each voice.

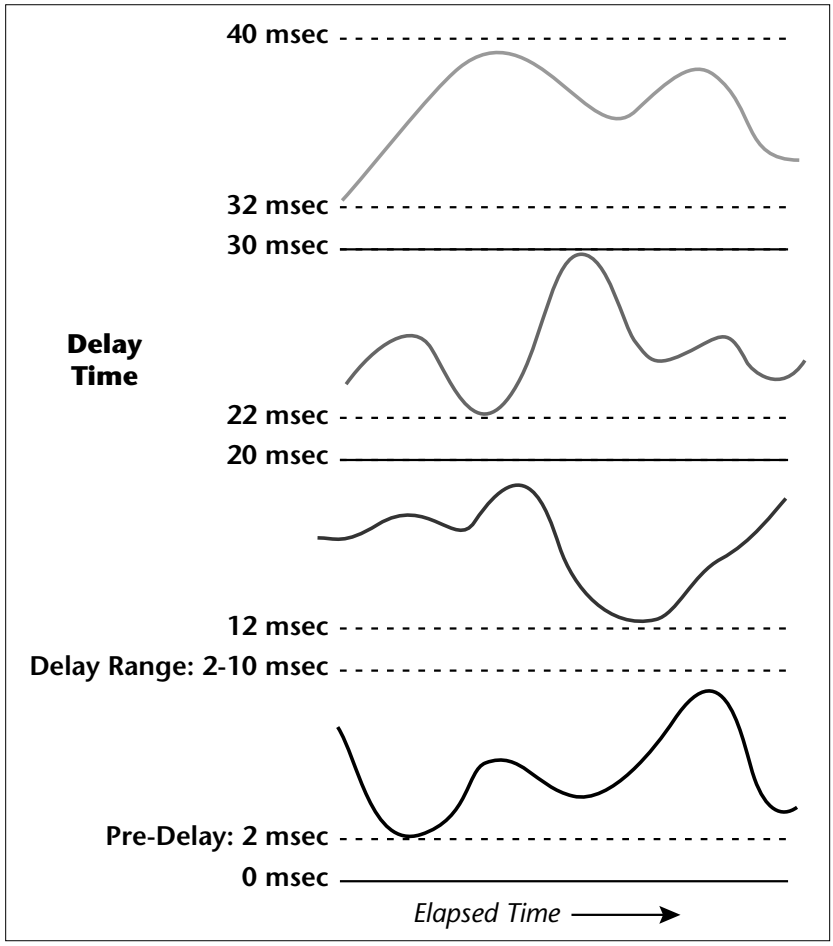

Thus the Voice Delay parameter causes the voices to become spread out in time by the amount of the parameter, even as they stay within the now *relative* delay times specified by the Delay Range parameter.

MIDI continuous controllers can be used to control various parameters such as Maximum Detune and Feedback.

RFX Chorus Parameters:

Please refer to the RFX Chorus block diagram on page 2 to better understand the effect and modulation routings.

Pre-Delay

The Pre Delay parameter, ranging from 0 to 100msec, sets a lower limit to the delay applied to any chorused voice.

Delay Range

The Delay Range parameter, from 0 to 100msec sets the range of delay times, above and beyond the Pre Delay parameter, over which the chorused voices will modulate. The display of Delay Range shows the actual delay range in milliseconds, tracking changes in both the Pre Delay and Delay Range value itself.

Voice Delay
(Ultra Chorus only)

An additional delay, from 0 to 20msec in .5msec increments, which is added between adjacent voices in order to spread them out in time. When used in conjunction with the Pre Delay and Delay Range parameters, the Voice Delay parameter can be used to control the amount of separation (when Voice Delay is greater than Delay Range) or overlap (when Voice Delay is less than Delay Range) in the delay ranges of adjacently numbered voices.

Note that when Voice Delay is non-zero, the displayed Delay Range is strictly accurate only for the first pair of voices; subsequent pairs are additionally delayed by multiples of Voice Delay.

Max. Detune

Sets the maximum amount of detuning, calibrated in cents and semitones, that any one voice will experience during the process of being modulated across its delay range. Note that when being modulated randomly, most voices will only occasionally reach this target maximum. With large Delay Ranges, the effect of changes to Max Detune may not be immediately apparent since, to avoid discontinuities, these changes are applied only at certain points in the delay modulation cycle.

The detune amount set by Max. Detune is a **maximum** that can be further scaled down using the MIDI Modulation Detune parameter.

Random Motion The modulation used to generate each voice's delay is a variable mix of random-rate and constant-rate modulation, combined in the proportion shown by the Random Motion parameter. When the percentage is non-zero, the Motion Shape parameter becomes active to allow the selection of a particular shaping to the random modulation.

Motion Shape This parameter sets the shape of the random portion of the modulation signal. This parameter is active only when the proportion of the Random Motion parameter is non-zero.

Linear motion causes pitch shifts which are constant until the modulator changes direction.

The **Curved** shape allows some changes in pitch across the trajectory of the modulator.

The **Sine** shape provides a sine-weighted warping of the modulation signal that produces a very “warbly” effect.



MIDI Controls
Wet/Dry Mix
FX Input Level
FX Output Level
Feedback
Detune

Feedback This controls the amount of signal recirculated from selected delay taps back into the input of the choruser. At short delay ranges this produces a variable resonance which imparts a somewhat “liquid” character to the sound. At longer delay ranges the choruser acts like a multi-tap delay with feedback, producing a sense of ambience that at higher numbers of taps and longer delays approaches the effects of a reverberator.

The feedback amount set here is a maximum setting which can be scaled down using the MIDI Modulation Feedback parameter.

Number of Voices This controls how many of the independent voices produced by the choruser are sent to the output. In the RFX Chorus plug-in this varies from 1 to 6 and in the Ultra Chorus plug-in varies from 2 to 16. Odd numbered voices are generated by the left chorus channel and even numbered voices by the right, so setting this parameter to odd values may result in some audible asymmetry in the stereo output panorama.

Output Width When scaled down from 100%, this parameter progressively “folds” the left and right choruser outputs together to produce a mono signal at both output channels. This can be useful for reducing the extremely wide stereo image produced by some settings of the choruser parameters or for reducing the asymmetry produced in the output by odd numbers of voices or the by the Series setting of the Input Mode parameter.

Input Mode This parameter has 3 possible values:

Stereo The left and right chorus elements are fed directly from the left and right input signals.

Mono(L) The left input signal is fed to both left and right chorus elements.

Series(L>R) The left input signal feeds the left chorus element which then feeds the right chorus element in series. The left output is fed the singly-processed result of the left chorus element, and the right output is fed the doubly-processed result of the series connection of the left and right chorus elements.



E-MU / ENSONIQ U.S.A.

1600 Green Hills Road

Scotts Valley, CA USA

95066

Telephone 831-438-1921

FAX 831-438-8612

EUROPE, AFRICA, MIDDLE EAST

E-MU / ENSONIQ

Suite 6, Adam Ferguson House

Eskmills Industrial park

Musselburgh, East Lothian

Scotland, EH21 7PQ

Telephone +44 (0) 131-653-6556