STATUS 18R REAR PANEL PINOUT
(PATCHBAY VERSION)

FROM MULTI & DEVICE (MONO)
(TYP: 1-4, 5-8, 9-12.....)

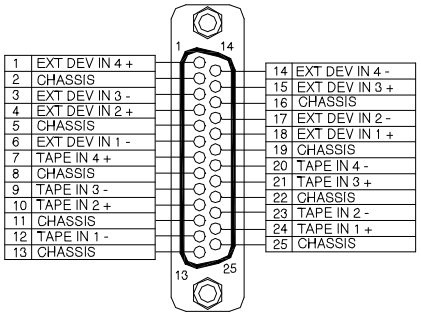

FROM MULTI & DEVICE
(STEREO OPTION - TYP)

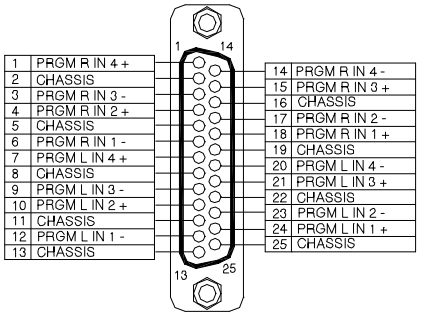

TO STEREO MACHINES

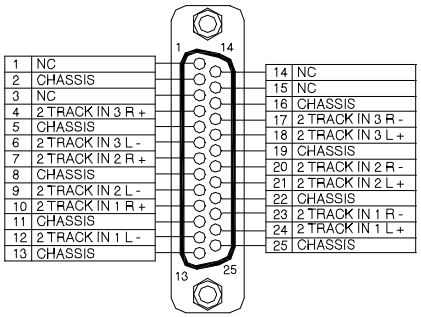

FROM STEREO MACHINES

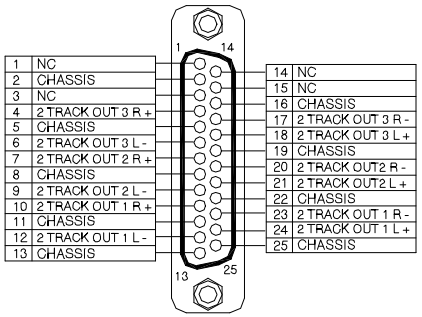

TO STEREO AMPS

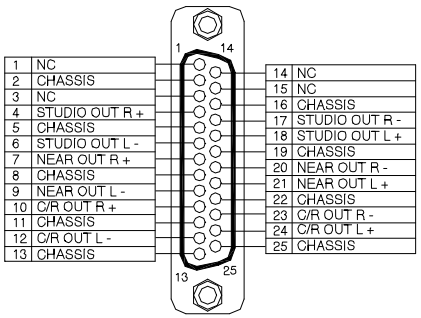

TO MULTI TRACK 1-8

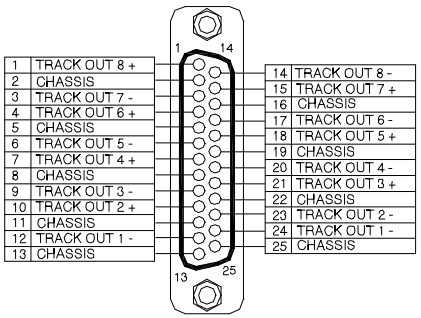

TO MULTI TRACK 9-16

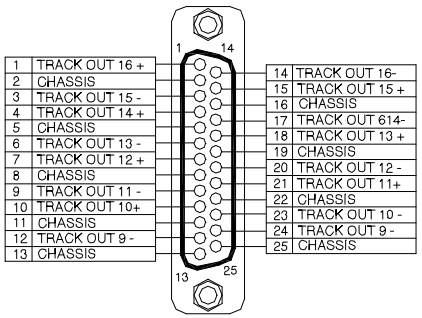

TO MULTI TRACK 17-24

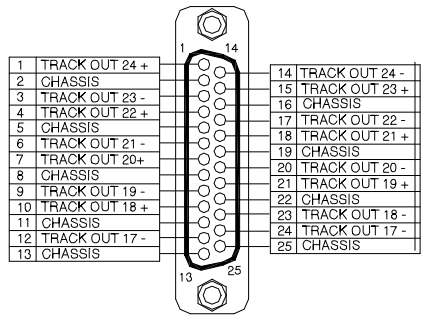

TO AUX 1-8

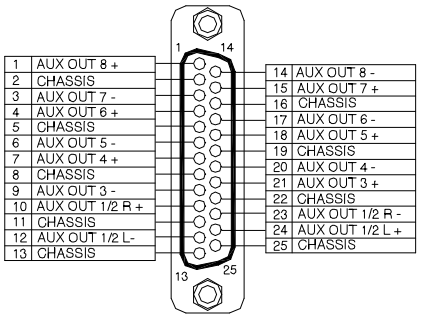

TIE LINES
(A, B, C, & D 1-8)

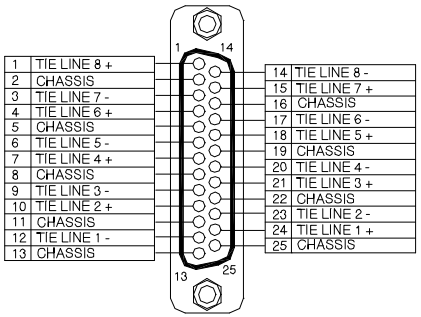

TIE LINES
(A, B, C, & D 9-16)

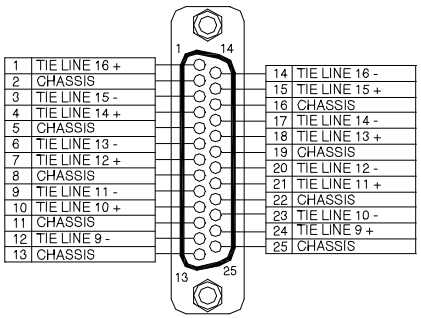

OPTIONAL TIE LINE CARDS

