

QUICK START

Shredded, this document makes excellent packing material. In its present form, it makes interesting and useful reading. If you run out of patience quickly, at least read this part to make sure you don't exterminate everything in a two mile radius by doing something wrong.

In a nutshell, to use the DC 24 as a conventional dual channel compressor/limiter, ensure that the **CROSSOVER ENGAGE** switch on the rear is in its *out* position. Attach one or two channels of inputs and outputs to the respective connectors on the rear. With all **RATIOS** *down*, **LIMITER THRESHOLD** all the way *up* and the **LEVEL** controls in *center-detent* you have an expensive patch cord. Make sure the **BYPASS** switches are *out* and set the **GATE** and **COMPRESSOR** for the desired ratios and thresholds. Turning the **LIMITER THRESHOLD** down decreases the level at which limiting occurs. The **GATES** and **COMPRESSORS** may both be activated by the source material applied to Channel 1 if the **DUAL/SLAVE** switch is pressed *in*. This is a normal condition for true stereo program material.

To use the DC 24 's crossover bandsplit mode, be sure the rear panel **CROSSOVER ENGAGE** switch is *in*. Connect the input to **CH 1/CROSSOVER IN**. With the rear panel **OUTPUTS** switch set to **SEPARATE**, split outputs are available at the **CH 1/LOW OUT** and **CH 2/HIGH/COMBINE OUT** jacks. With the **OUTPUTS** switch at **COMBINE**, use only the **CH 2/HIGH/COMBINE OUT** jack for a mono sum of high and low channels.

NEVER CONNECT ANYTHING EXCEPT AN RS 1 OR OTHER APPROVED RANE AC POWER SUPPLY TO THE THING THAT LOOKS LIKE A TELEPHONE JACK ON THE REAR OF THE DC 24. This is an AC input and requires some special attention if you do not have an operational power supply **EXACTLY** like the one that was originally packed with your unit.

DC 24 CONNECTION

Placing the DC 24 within the chain of events in your system varies slightly depending on application. If you are assembling a sound reinforcement system, the DC 24 would typically be placed between the equalizer (you do use one, don't you?) and the active crossover, or the power amplifier if passive crossovers (or the DC 24 crossover) are used.

In recording applications, the DC 24 may be used in conjunction with insert loops on the mixing console or in series with the outputs en route to the recorder. Most consoles allow headphone monitoring of the processed signal if the device is connected to the inserts. A most useful feature. If the DC 24 is used on mixdown, it may be connected to the output of the multichannel recorder or again on inserts of the mixdown console.

Many recording situations require that the DC 24 be connected to the patch bay in the system so it may be easily moved from one signal location to another. This call should be made based upon the requirements of the application.

Wiring of this and all components should follow the Sound System Interconnection RaneNote included in this manual. This note details standard wiring conventions which should be used to prevent noise and distortion. Also see the Chassis ground point on page Manual-3.

WEAR PARTS: This product contains no wear parts.

FRONT PANEL DESCRIPTION

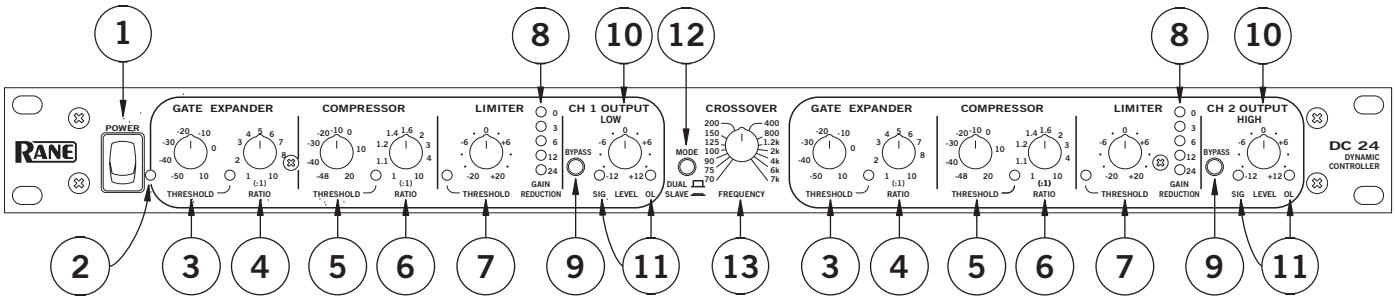

① **POWER switch:** It has been a tradition at Rane Corporation to say something clever about the POWER switch on all its products. Certain government restrictions now eliminate our option of continuing this tradition. Pity.

② **POWER indicator LED:** This solid-state yellow illumination device lights up to let the operator know Item 1 (above) is working and the thing is plugged in.

③ **GATE / EXPANDER THRESHOLD control:** allows the operator to set the input level below which the Gate/Expander operates. The LED illuminates yellow any time the input signal falls below the threshold level set by this control.

④ **GATE / EXPANDER RATIO control:** determines the Ratio to be applied to the Gate/Expander function. Increased clockwise rotation increases the circuit slope. The full counter-clockwise position disables the Gate/Expander.

⑤ **COMPRESSOR THRESHOLD control:** determines above what input level the Compressor functions. Full clockwise rotation disables the Compressor entirely. The LED illuminates yellow any time the input signal exceeds the threshold level set by this control.

⑥ **COMPRESSIOR RATIO control:** determines the slope of the Compressor once it has exceeded the indicated threshold. Full counter-clockwise rotation of the RATIO control disables all Compressor activity.

⑦ **LIMITER THRESHOLD control:** determines above what level the Servo Locked Limiter™ functions. Full clockwise rotation of this knob disables all Limiter activity. The LED illuminates red any time the input exceeds the LIMITER THRESHOLD setting.

⑧ **GAIN REDUCTION meter:** indicates the amount of reduction, below unity, being applied to the audio signal by the VCA.

⑨ **BYPASS switch:** When pressed *in*, this channel in the DC 24 is is hard-wire Bypassed. Each channel may be individually Bypassed for comparison and alignment purposes. See OPERATING INSTRUCTIONS on page Manual-4.

⑩ **OUTPUT LEVEL control:** increases or decreases the output gain of each channel by 12 dB. In the center detent, gain will be unity. *(NOTE: Channel 2 OUTPUT LEVEL controls overall output in COMBINE mode.)*

⑪ **SIGnal present LED:** illuminates any time the input signal exceeds approximately -40 dBu.
The **OverLoad LED:** illuminates any time the output exceeds a level equal to -4 dB below the clipping level.

⑫ **DUAL / SLAVE mode switch:** In the *in* (SLAVE) position, this switch causes both channels' Gate, Compressor and Limiters to act together, i.e., they are "slaved." All controls for both channels remain active, so independent settings are still possible; however, whenever a signal in one channel exceeds its settings, then *both* channels change by the same amount. In the *out* (DUAL) position, both channels operate independently.

⑬ **CROSSOVER FREQUENCY control:** This rotary control selects the crossover frequency. What did you think?

REAR PANEL DESCRIPTION

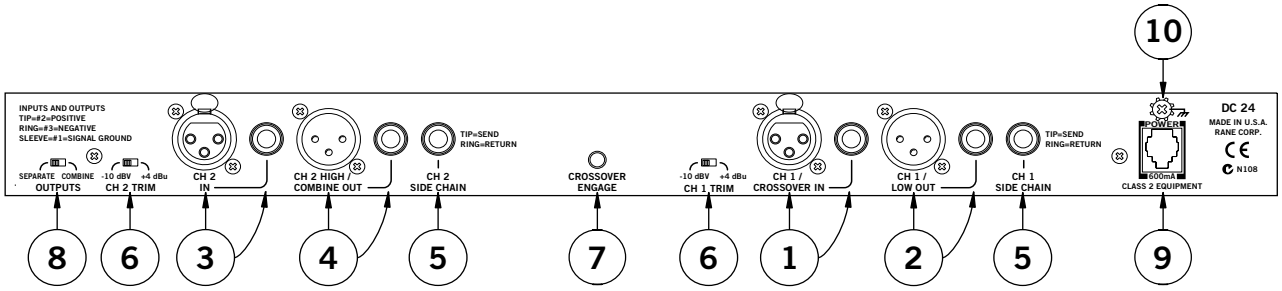

① **CHANNEL 1 INPUT connectors:** deliver signal to both channel 1 of the processor and to the crossover circuit. Choose either the XLR or the ¼" TRS jack, do not use both, they do not sum.

② **CHANNEL 1 / LOW OUTPUT connectors:** deliver signal from channel 1's processing circuitry and represents the low-pass portion of the signal when the CROSSOVER ENGAGE switch ⑦ is in the *in* position. Both the XLR and the ¼" TRS jack may be used at the same time if desired.

③ **CHANNEL 2 INPUT connectors:** only deliver signal to channel 2's processor. It is disconnected when the CROSSOVER ENGAGE switch ⑦ is in its *in* position. Choose either the XLR or the ¼" TRS jack, do not use both, they do not sum.

④ **CHANNEL 2 / HIGH / COMBINE OUTPUT connectors:** make the signal from channel 2 available to the outside world and is the high-pass portion of the audio when the CROSSOVER ENGAGE switch ⑦ is in its *in* position. If the OUTPUTS switch ⑧ is in the COMBINE position, this output produces the sum of channels 1 & 2 and its overall level is controlled by CH 2 OUTPUT LEVEL. Both the XLR and the ¼" TRS jack may be used at the same time if desired.

⑤ **SIDE CHAIN:** Inserting a ¼" TRS plug into this jack breaks the input signal path to both the Compressor and Gate control circuit. Inserting an equalizer in this loop enables greater compression of boosted equalizer frequencies. The standard convention is used of Tip=Send & Ring=Return.

⑥ **INPUT GAIN TRIM switches:** In its +4 dBu position, the input gain of the respective channel is unity. In the -10 dBV position, the input gain is increased by 12 dB (although mathematically suspicious, it really is 12 dB, not 14 dB) to compensate for certain recording devices. This switch must be in the +4 dBu position for front panel calibration accuracy.

⑦ **CROSSOVER ENGAGE switch:** In its *in* position, this switch places the low pass portion of the audio signal on CH 1 /LOW OUT, and the high pass portion on CH 2 / HIGH / COMBINE OUT.

⑧ **SEPARATE / COMBINE OUTPUT switch:** In the COMBINE mode, the outputs of channel 1 and channel 2 are added together and delivered to the CH 2/HIGH/COMBINE OUT connector. This feature is supplied to allow an input to be split by the crossover, high pass and low pass delivered to separate processor channels, and recombined at the output of the unit. The COMBINE mode has no effect on the output of channel 1.

⑨ **Remote POWER supply input:** The DC 24 is supplied from the factory with a Model RS 1 Remote Power Supply suitable for connection to this input jack. The power requirements of the DC 24 call for an 18-24 volt AC center-tapped transformer only. *This is not a telephone jack. Never use a power supply with your DC 24 other than the one supplied or an exact replacement obtained from Rane Corporation.* Using any other type of supply may damage the unit and void the warranty.

⑩ **Chassis ground point:** A #6-32 screw is used for chassis grounding purposes. If, after hooking up your system, it exhibits excessive hum or buzzing, there is an incompatibility in the grounding configuration between units somewhere. Your mission is to discover how your particular system wants to be grounded. Here are some things to try:

1. Try combinations of lifting grounds on units that are supplied with ground lift switches or links.
2. If your equipment is in a rack, verify that all chassis are tied to a good earth ground, either through the line cord grounding pin or the rack screws to another grounded chassis.
3. Units with outboard power supplies, such as the DC 24, do not ground the chassis through the line cord. Make sure that these units are grounded either to another chassis which is earth grounded, or directly to the grounding screw on an AC outlet cover by means of a wire connected to a screw on the chassis with a star washer to guarantee proper contact. If you are connecting the DC 24 outputs directly to a power amplifier, be sure to connect a ground wire to the amplifier chassis.

Refer to the "Sound System Interconnection" RaneNote (supplied with this manual) for further grounding information.

OPERATING INSTRUCTIONS

Once all of the inputs and outputs are properly connected in accordance with the preceding section, normal operation of the DC 24 should be achievable. If any of the following procedures do not appear to produce the required results, take a step backwards and check your wiring.

PRE-FLIGHT CHECKLIST

Before proceeding, it's a good idea to turn the control knobs to the following positions:

1. POWER...off
2. GATE / EXPANDER THRESHOLD...full CCW
3. GATE / EXPANDER RATIO...full CCW
4. COMPRESSION THRESHOLD...full CCW
5. COMPRESSION RATIO...full CCW
6. LIMIT THRESHOLD...full CW
7. OUTPUT LEVEL...centered in its detent
8. Set all pushbuttons on the front and rear to their *out* positions.
9. Set the **OUTPUTS** slide switch to **SEPARATE**.
10. Set the gain **TRIM** switches to **+4 dBu**.

LIMITING

With all of the preceding accomplished, turn the POWER switch on (be sure your amp is turned down). The DC 24 is now nothing but a unity gain amplifier. Cycling the BYPASS switches with audio passing through the unit should yield no difference in level or sound dynamics. The GAIN REDUCTION meters should indicate 0 and nothing else. Assuming your input signal has peaks in excess of -20 dBu, you should be able to rotate the LIMITER THRESHOLD controls CCW and see some gain reduction occur on the meter simultaneously with a randomly illuminating THRESHOLD LED. You should begin to hear the difference. Leave these controls at whatever Limit level is appropriate for your application.

COMPRESSION

To use the Compressor, set the COMPRESSOR THRESHOLD for an appropriate level, you should see the associated LED illuminate as signal goes above and below this level. The COMPRESSOR RATIO control adjusts the gain reduction slope above the level you have set.

GATE / EXPANDER

The Gate / Expander function works similarly. If the GATE / EXPANDER THRESHOLD is still fully CCW, rotate the GATE / EXPANDER RATIO to its full CW position. Stop your audio source and you will see the GAIN REDUCTION LEDs drop to the -24 dB position. This indicates that the Channel is in the fully gated mode. If you wish to have gating occur at a higher level, rotate the GATE /EXPANDER THRESHOLD control CW to a higher level. If you wish to create special effects with this gate, you may elect to use a lower GATE / EXPANDER RATIO setting. This inhibits full gating by the amount indicated around the control. Experiment with all the controls to obtain the required results.

STERNO

When using the DC 24 as a true stereo (a.k.a. sterno; hey, lighten up, it's a joke!) processor, left channel in Channel 1 and right channel through Channel 2, it is a good idea to operate the unit in the SLAVE mode to prevent large balance and image shifts. While in the SLAVE mode, both channels attenuate by exactly the same amount when the Gate and Compressor work, maintaining the stereo image.

ATTENTION SHOPPERS

This seems like a good place to throw in a few words of caution. The DC 24 allows a great deal of flexibility. As such, it also allows one to come dangerously close to completely destroying an otherwise respectable audio signal if some thought and care is not put into the operation of the unit. There are combinations of THRESHOLD and RATIO settings on the Gate, Expander and Limiter which allow each to fight the others and in some cases completely cancel. The same caution applies to any signal processor, such as an equalizer or crossover, however these are a bit more intuitive and less likely to be used in a destructive manner. Just be gentle at first and you should not encounter too much difficulty. If you become overwhelmed, go back to the PRE-FLIGHT CHECKLIST for initial control settings and start over.

BYPASS SWITCHES IN CROSSOVER & COMBINE MODES

Crossover Mode. *Do not use the BYPASS switches when in the CROSSOVER mode.* Use of BYPASS in the crossover mode is potentially destructive since these switches route full bandwidth audio to drivers designed only for a limited frequency range. (CH 2 BYPASS is automatically defeated, but Ch. 1 is still active — do not engage the CH 1 BYPASS for any reason.)

Combine Mode. As more users (particularly bass guitar players) discover new applications for this mode, they want to use BYPASS as an aid in optimizing settings. Unfortunately, the BYPASS switches do not operate in the COMBINE mode; however, a simple trick solves the problem:

1. Permanently engage the CH 1 BYPASS switch.
2. Patch CHANNEL 1 OUTPUT to CHANNEL 2 INPUT using either the ¼" TRS or the XLR jacks. Be sure to use 2-conductor shielded cable.
3. The CH 2 BYPASS switch now operates in the COMBINE mode.

RESOURCES

For additional explanations, tips and assistance, see "The DC 24 Users Guide" and "Good Dynamics Processing." Both of these RaneNotes are available on the Rane website.