

QUICK START

The **AC 24** is fully balanced with XLR connectors wired pin 2 "hot" per AES standards. Set the **3-WAY/4-WAY** switch on the rear appropriately. When in 3-WAY mode, the **HI-MID** controls are inactive. The **MID / HI-MID** Frequency control becomes the **MID / HIGH** Frequency control.

If you need a summed Mono Low Ouput, push the **MONO LOW** switch on the front panel.

The **FREQUENCY** controls and other alignment procedures are best set with a realtime analyzer such as the Rane RA 30. It's also good to have range specifications for the drivers used in the system. See **Select Crossover Frequencies** on page Manual-4.

The **DELAY** controls add from 0 to 10 ms of signal delay to each Output to assist in signal-aligning drivers. See **Adjust Signal Delay** on page Manual-5.

CD HORN EQ is provided if constant-directivity horns are used. If CD Horn EQ is not required, make sure the **HORN EQ** filters are *off* (button *out*) and frequency settings are at 8 kHz. See **Set CD Horn EQs** on page Manual-8.

LEVEL controls are best set using the steps provided in **Set Output Levels** on page Manual-8.

The MID, HI-MID and HIGH Output **LIMIT** Threshold controls are linked to preserve spectral balance. Any Output that crosses its threshold (indicated by the indicator) will cause all Outputs to Limit. The LOW Output is independent, and may be linked to the others via the **LIMIT LINK** switch. See **Set Limiters** on page Manual-9.

When using **STEREO LINK**, we recommend turning down the Output Level controls of the **SLAVE** (**Channel B**) to minimum. This prevents unwelcome surprises if the Master / Slave function is turned *off*.

The **SUM** Outputs are useful for instrumentation devices as indicated in the setup procedure. These may also be used for split-band EQ and/or split-band Limiter applications. When using these, it is important to note that CD HORN EQ and DELAYS affect the Summed Output. If you want a flat response, do *not* use Delay or CD Horn EQ when using the Sum Outputs.

The **INVERT** switches located on the rear panel allow you to correct driver polarity differences without rewiring. Linkwitz-Riley filter outputs are always in phase with correct polarity.

In agreement with IEC and AES/ANSI standards, wiring convention is pin 2 positive, pin 3 negative (return), pin 1 shield chassis ground. See the "Sound System Interconnection" RaneNote included with this manual for more information on cabling and grounding requirements.

WEAR PARTS: This product contains no wear parts.

Downloaded from www.Manualslib.com manuals search engine

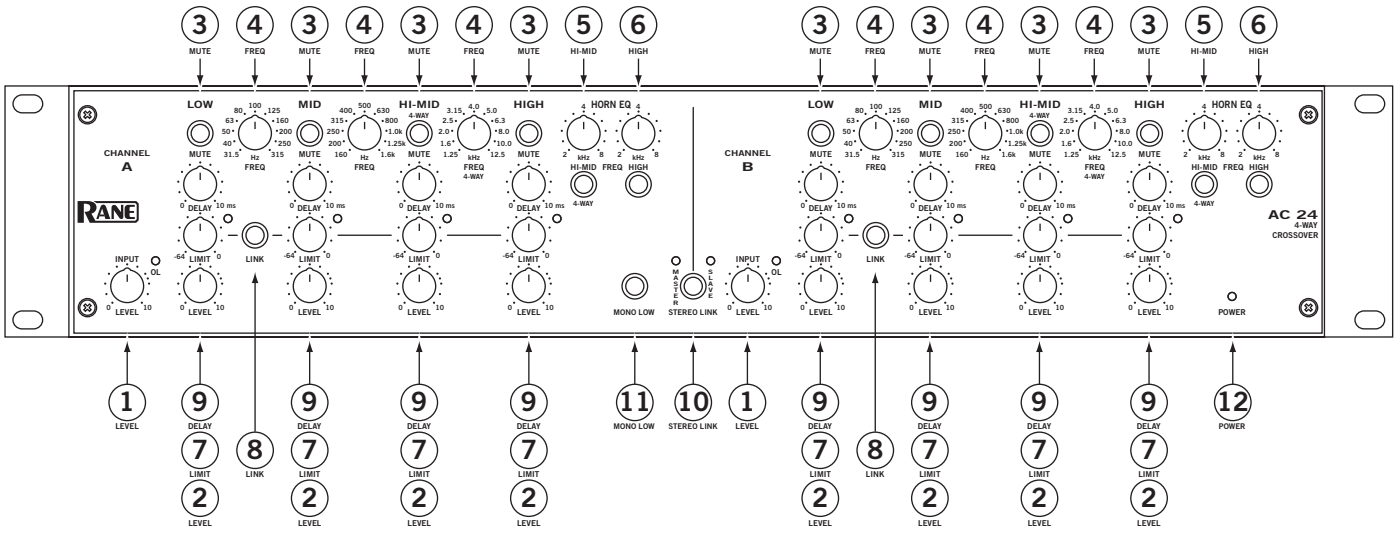

① **Channel INPUT LEVEL controls and OL indicator:** Set the overall Levels of Channels A and B without altering the relative settings of the Low, Mid, Hi-Mid and High frequency Outputs. The range is 80 dB, and maximum gain is 6 dB. The OL warning indicator lights 4 dB before clipping. Audio taper is down 16 dB at the center of rotation (dot 5). Unity gain is the white dot between dots 7 and 8.

② **Low, Mid, Hi-Mid and High Output LEVEL controls:** Sets the signal Level going to each of the Crossover Outputs. The Hi-Mid control is inactive in 3-Way Mode. Refer to 'Setting the Output Level Controls' on page Manual-15. Audio taper is down 16 dB at the center of rotation (dot 5). Unity gain is the white dot between dots 7 and 8.

③ **Low, Mid, Hi-Mid and High Output MUTE switches:** When pressed to the *in* position, all signal is removed from the respective frequency Output. This eases tune-up procedures as described beginning on page Manual-4.

④ **Crossover FREQUENCY controls**: Set the crossover frequencies between the Low, Mid, Hi-Mid and High frequency Outputs. The Hi-Mid control is inactive in 3-Way Mode. Refer to 'Select Crossover Frequencies' on page Manual-4.

⑤ **Hi-Mid Output CD HORN EQ and engage switches:** When the switch is pressed to the *in* position, the CD Horn EQ is active when the AC 24 is in 4-Way mode. If CD Horn EQ is not required, make sure the HORN EQ filters are *off* and frequency settings are at 8 kHz. Refer to 'Set CD Horn EQs' on page Manual-8.

⑥ **High Output CD HORN EQ and engage switches:** When the switch is pressed to the *in* position, the CD Horn EQ is active. If CD Horn EQ is not required, make sure the HORN EQ filters are *off* and frequency settings are at 8 kHz.

⑦ **Output LIMIT controls and indicators:** These are Thresholds for each of the Output Limiters, with a range of 0 to -64 dBFS. To maintain spectral accuracy, Mid, Hi-Mid and High frequency Outputs are linked, so that any signal that crosses a Threshold will limit all three Outputs equally (see ⑧). The independent Threshold indicators show which band is the source of the limit condition. Refer to 'Setting Limiters' on page Manual-8.

⑧ **Low Output LIMITER LINK switch:** The Limiter for the Low Output is independent of the Mid, Hi-Mid and High frequency Output Limiters. This is often desirable to prevent "pumping" or modulating higher frequencies. Depressing this switch "links" the Low Limiter to the other limiters. Refer to 'Set Limiters' on page Manual-8.

⑨ **Low, Mid, Hi-Mid and High Output DELAY controls**: Add from 0 to 10 ms of signal Delay to each of the Crossover Outputs (10 ms = 135 inches = 11.313 feet = 3.429 meters). This allows a driver to be electronically phase-aligned with a driver whose diaphragm is situated *behind* the other. Refer to 'Adjust Signal Delay' on page Manual-5.

⑩ **STEREO LINK switch:** This switch links CHANNEL A as the MASTER to CHANNEL B as the SLAVE, useful in stereo applications. In this mode, the MASTER (A) controls all of the SLAVE's (B) DSP functions, leaving Channel B's controls inactive. When using the Stereo Link, we recommend setting the SLAVE (B) Outputs to minimum. This prevents unwelcome surprises if the STEREO LINK switch is turned off.

⑪ **MONO LOW Output switch:** Sums the Outputs of Channels A and B, appearing at the Channel A LOW Output.

⑫ **POWER indicator:** When this yellow LED is lit, you guessed right — the unit is on and ready.

Downloaded from www.Manualslib.com manuals search engine

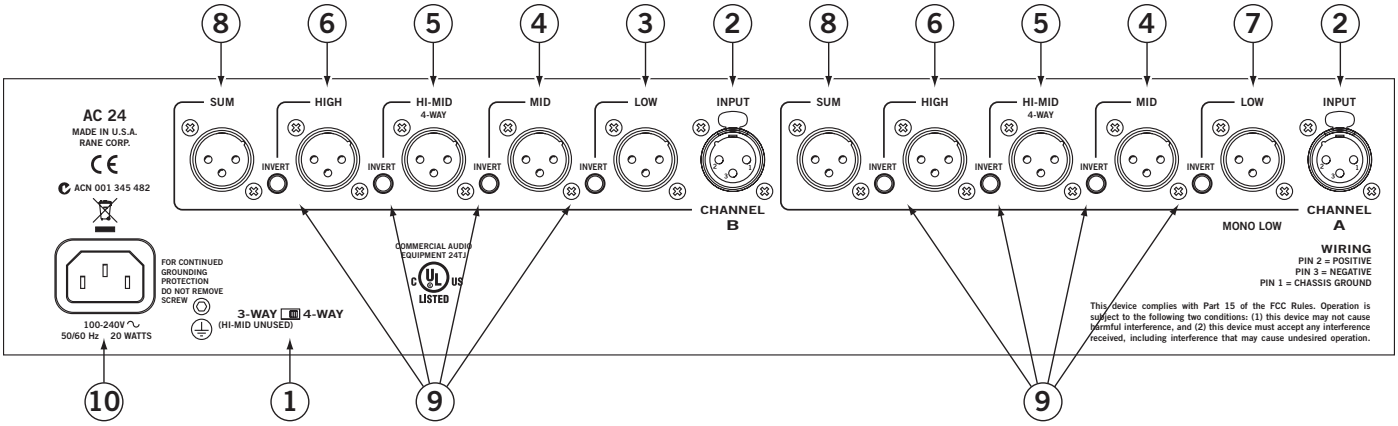

① **3-WAY / 4-WAY switch:** Converts the outputs from 3-Way to 4-Way. This switch removes the Hi-Mid frequency crossover from the signal path — the HI-MID / HIGH Frequency control and all HI-MID controls are disabled. The MID / HI-MID Frequency control becomes the MID / HIGH Frequency control.

② **CHANNEL A and B INPUTS:** Plug the outputs of the mixer, equalizer or other source to these Inputs.*

③ **LOW Outputs:** Connect the CHANNEL A LOW Output to the left channel input of the low frequency amplifier, and the CHANNEL B LOW Output to the right channel input of the low amplifier. If you need a summed Mono Low Output, use the CHANNEL A Output (see ⑦).*

④ **MID Outputs:** Connect the CHANNEL A MID Output to the left channel input of the amplifier, and the CHANNEL B Mid Output to the right channel input of the amplifier.*

⑤ **HI-MID Outputs:** Are only used in 4-WAY mode. Connect the CHANNEL A HI-MID Output to the left channel input of the amplifier, and the CHANNEL B HI-MID Output to the right channel input of the amplifier.*

⑥ **HIGH Outputs:** Connect the CHANNEL A HIGH Output to the left channel input of the high frequency amp, and the CHANNEL B HIGH Output to the right channel input of the high frequency amp.*

⑦ **CHANNEL A LOW Output:** Connect this Output to the input of the low frequency amplifier when the MONO LOW switch is activated on the front panel. It contains the sum of both CHANNEL A and B LOW signals.*

⑧ **SUM Outputs:** Are a sum of the LOW, MID, HI-MID, and HIGH Outputs. The Sum Outputs are useful to connect to instrumentation devices as indicated in the setup procedure. Use the Sum Outputs for split-band EQ and/or split-band Limiter applications. When using the Sum Outputs, it is important to note that CD Horn EQ and Delays affect the summed output. If you want a flat response, do *not* use delay or CD Horn EQ when using these Sum Outputs.*

⑨ **Output INVERT switches:** may assist in keeping drivers in-phase without having to rewire connections. Linkwitz-Riley filter Outputs are always in phase with correct polarity. Be sure the amplifiers are *off* before changing any of these switches.

⑩ **Power connector:** Uses the standard cord provided. Inside the AC 24 is a universal internal switching power supply that accepts 100 to 240 VAC at 50 to 60 Hz, allowing it to work in most countries.

**Note: In agreement with IEC and AES/ANSI standards, wiring convention is pin 2 positive, pin 3 is negative (return), pin 1 is shield chassis ground.*

Downloaded from www.Manualslib.com manuals search engine

Setup Methods

The goal is to design a 3-way or 4-way system with the flattest possible response and good dispersion. Two practical methods for crossover setup follow:

1. Use relatively low levels of pink noise and close microphone placement (18 to 36 inches)[45 to 90 cm] to minimize the effects of room acoustics. Once the system is tuned, lock the crossover behind a security cover.

2. Use measurement tools designed to analyze installed systems. Professional system analysis tools are available that can discriminate between room acoustics and system response. SIA Software Company, Inc., have developed tools, including SmaartLive and SIA Acoustic Tools, that allow sound system measurement and acoustic analysis. The software is designed for serious pro audio and acoustical consultant engineers. For more information visit *www.siasoft.com*. Once the system is tuned, lock the crossover behind a security cover.

Setup Instructions

The following crossover setup procedure is based on the use of *close microphone placement* with the system installed. The procedure requires a real-time analyzer, pink noise source and SPL meter. As luck would have it, the Rane RA 30 is equipped with all three. There are five steps:

STEP ONE: **Select Crossover Frequencies**
STEP TWO: **Adjust Signal Delay**
STEP THREE: **Set CD Horn EQs (if required)**
STEP FOUR: **Set Output Levels**
STEP FIVE: **Set Limiters**

***Note**: If you are running two Channels, tune up only one Channel at a time, unless the STEREO LINK is used.*

STEP ONE: Select Crossover Frequencies

Most speaker manufacturers supply low and high frequency cut-off points for each driver. These cut-off frequencies are based on each driver's response limitations, physical limits and safe operating area. Most specifications allow a safety margin to accommodate gentler filter roll-off.

The AC 24 utilizes continuously adjustable frequency selectors. Each precision potentiometer provides 64 steps covering 3.3 octaves (.05 octave per step). This resolution assures consistent accuracy.

The AC 24 possesses 24 dB per octave roll-off, so the crossover points are easily set with the accuracy required to avoid hazard to the driver or degradation in sound quality.

For best results, choose speaker components so each operates well within its recommended limits with adequate response overlap. This provides valuable leeway in crossover frequency settings and helps ensure the flattest possible system response. Extra margin also yields higher system reliability. *If possible, always use some kind of realtime analyzer to tune your crossover.*

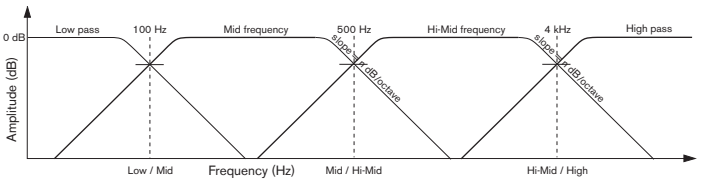

Figure 1. Driver responses and crossover points

Figure 1 shows typical driver responses for a 4-way system and the selected crossover frequencies. Select each drivers response and set each crossover frequency to allow significant overlap in response.

After Crossover Frequency settings are made based on driver data, the best way to proceed is with a realtime analyzer (see the Rane RA 30, page Manual-8). Using a realtime analyzer allows verification of crossover settings **and** adjustment of output levels to compensate for the sensitivity of individual drivers.

STEP TWO: Adjust Signal Delay

Before jumping feet first into the realm of signal delay compensation, it helps to re-affirm why delay is necessary. For a short course on signal delay and Linkwitz-Riley crossovers, we recommend the "Linkwitz-Riley Crossovers" RaneNote. Ask your dealer, call us at the factory, or get it from our website.

Let's review the basic effects of signal delay in crossovers. Problems pop up when two different speakers emit the same frequency in the crossover regions. Because the two drivers are displaced *vertically*, cancellation occurs somewhere off-axis because the sound waves have to travel different distances from the two speakers and hence, arrive out of phase. This forms a "lobe" or radiation pattern, narrowing the listening-area of the speaker. *Fine, so we put up with it.*

To make matters worse, when two drivers are *horizontally* displaced—that is, one is in front of or behind the other, this "lobe" or dispersion pattern gets *tilted* toward the driver that is further behind (see Figure 2). The result is a speaker system with two, three, four or more tilted radiation patterns.

In an ideal system, all drivers are aligned in the same vertical plane and all components are in phase. With main lobes on-axis and well behaved, the system has the widest possible dispersion pattern and everyone gets good sound. Unfortunately, it's often physically impossible to place all the driver sound sources in the same vertical plane. Fortunately, by electronically delaying the signal going to the front driver, the sound from the rear driver is able to catch up. The result is signals from both drivers arriving in phase with correct acoustic summing (see Figure 3).

The trick is finding the proper signal delay amount: hence the rest of this section. It is possible to get *good* results by setting the required signal delay based exclusively on horizontal displacement as outlined in **Signal Delay Method One**. Ideally, using true delay in combination with phase compensated crossover filters, would make the required signal delay *independent* of the crossover frequency. If true, the required delay could be determined solely by the horizontal displacement between driver voice coils. *The world is seldom ideal.* The drivers themselves introduce phase shift that must be accounted for. Therefore, best results are achieved by calibrating the required delay outlined in **Signal Delay Method Two**.

Downloaded from www.Manualslib.com manuals search engine

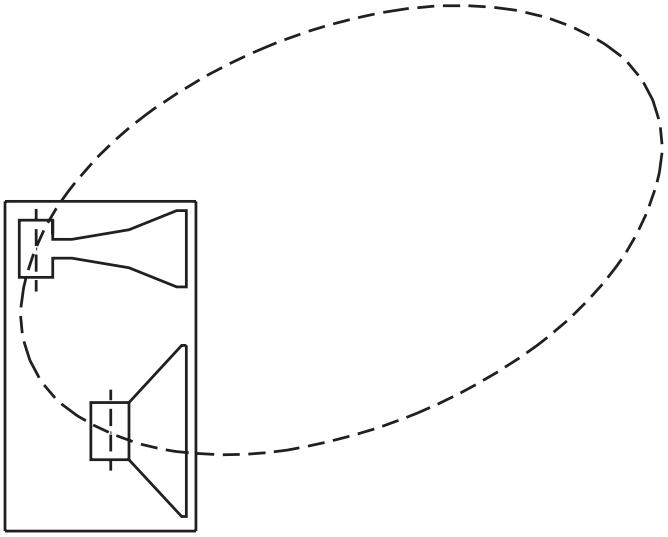

Fig. 2 In-Phase Axis Response Without Signal Delay

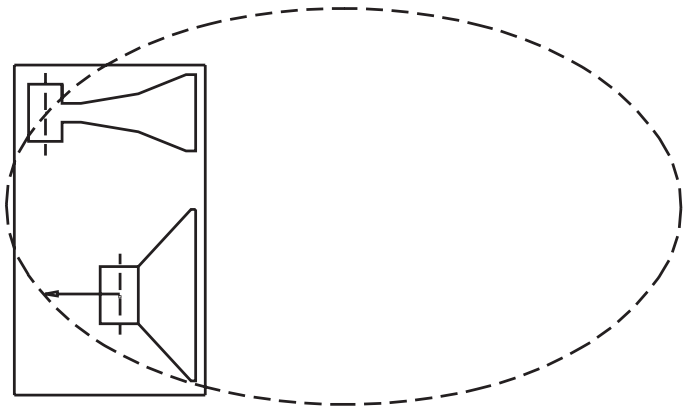

Fig. 3 Corrected In-Phase Axis Response with Delay on Low Driver

Signal Delay Adjustment Method One

If you can not get your hands on the equipment necessary to electronically align the system, it is possible to set the delays using only the horizontal displacement of the sound sources. *It is very important to make certain that all drivers have correct polarity before setting signal alignment delay*. First, let's review the basic information required for the task.

- The general equation for the speed of sound in dry air is:
  331.4+0.6Tc m/s
  Tc = temperature in degrees Celsius,
  m = meters and
  s = seconds

- For those still having difficulty accepting the metric system, the following approximation will do:
  13.57 inches / millisecond at 72° Fahrenheit.
  34.5 cm / millisecond at 22° Celsius.

- The AC 24 provides 10 ms of delay. *Each dot on the silkscreen represents 1 ms or 13.57 inches (at 72 °F).*

- This allows delay compensation for distances ranging from 0.0 to 135 inches (11.3 feet) [343 cm].

- The resolution of the adjustment is about 0.6 inch [1.5 cm].

Important Note: The horizontal location of a driver is determined by the front of the voice coil.

Method One, Step-by-Step

1. Identify the driver that is the furthest away from the front of the stack. This driver gets zero delay. The horizontal displacement of all other drivers is measured relative to this driver.

2. Take the distance, *measured in inches*, for each driver and divide by 13.57. This gives the delay in milliseconds and pot rotation in "fractional-dots." See Figure 4.

Signal Delay Adjustment Method Two

OK, so you want to do this the hard way. The following example outlines one method for Signal Delay alignment of the system shown in Figure 4. The procedure easily adapts to other configurations.

Required tools: RA 30 Realtime Analyzer

Cautions/considerations: With 4th-order filters, it's important to accurately identify crossover frequency settings before adjusting delay. A reference level must be set for each driver at each crossover point. This eliminates errors due to non-flat driver response and room acoustics. *When using a ⅓-octave realtime analyzer, best results are achieved if crossover points are set to the nearest ⅓-octave center.*

Method Two, Step-by-Step

1. Initial AC 24 control settings:
   a. Leave FREQUENCY controls as set in **Step One**.
   b. MUTE all Outputs.
   c. Set Input *and* Output LEVEL controls to unity (the mark between the 8th and 9th dots).
   d. Set DELAYS to zero.
   e. Switch CD HORN EQs *off*.
   f. Set LIMITERS to 0 dB FS.
   g. Set all rear INVERT switches to the *out* (non-inverting) position (assuming all drivers are in phase).

2. Connect the RA 30 to the AC 24:
   a. Connect RA 30 Pink Noise output to Crossover Input.
   b. Connect AC 24 Sum Output to RA 30 Line Input.
   c. Set RA 30 Source to Line In.
   d. Set RA 30 to RTA Mode.
   e. Set RA 30 RTA Scale to 3 dB.
   f. Turn on RA 30 Pink Noise.

3. Adjust crossover frequencies to ISO centers:
   a. For this crossover frequency calibration you are looking at the line level Sum output and *NOT* the acoustic output.
   b. *Amplifiers* ***off***.
   c. *Un*MUTE the AC 24 Low Output.
      i) Press RA 30 NORM
      (Low Output passband should be green).

Downloaded from www.Manualslib.com manuals search engine

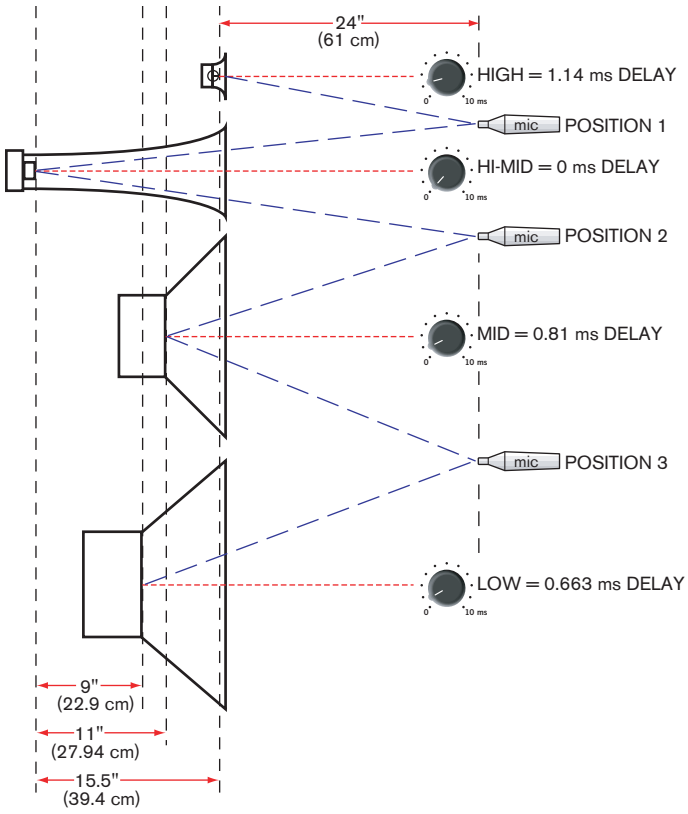

Figure 4. Delay setttings calculated using furthest driver as zero.

ii) The 1st 6 dB red LED on the RA 30 indicates the Low / Mid crossover frequency.
iii) Adjust the LOW / MID Frequency to just light the 1st –6 dB red LED closest to the desired crossover frequency.
iv) **Record the Low / Mid crossover frequency.**
v) MUTE the AC 24 Low Output.

d. Unmute AC 24 Hi-Mid output.
i) Press NORM
(Hi-Mid Output passband should be green).
ii) The 1st low-side –6 dB red LED on the RA 30 indicates the Mid / Hi-Mid crossover frequency.
iii) Adjust the MID / HI-MID Frequency to just light the 1st low-side –6 dB red LED closest to the desired crossover frequency.
iv) **Record the Mid / Hi-Mid crossover frequency.**
v) The 1st high-side –6 dB red LED on the RA 30 indicates the Hi-Mid / High crossover frequency.
vi) Adjust the HI-MID / HIGH Frequency to just light the 1st high-side red LED closest to the desired crossover frequency.
vii) **Note the Hi-Mid / High crossover frequency.**

e. MUTE all AC 24 Outputs.
f. Set All AC 24 Output LEVEL controls to minimum.

4. Connect the Crossover to the Amplifiers:
a. Amplifiers ***off****.*
b. Connect Crossover Outputs to appropriate amplifiers.
c. If you have gain controls on your amps, set these for the desired sensitivity (input voltage required to clip the amp).[1]
d. Do not adjust amplifier sensitivity controls after you have set crossover Output Levels.
e. Place the RA 30 analyzer microphone about 24 inches [60 cm] away from the speaker stack, as close to equidistant to each driver as possible (see Figure 4).
f. Set the RA 30 Source to CAL MIC.
g. Set the RA 30 to RTA Mode.
h. Set the RA 30 RTA scale to 1 dB.
i. Turn on the RA 30 Pink Noise.
j. Turn on the amplifiers.

5. Set the Delays starting with the driver furthest back (the one that gets zero delay) and work outward (see Figure 4).

6. Hi-Mid / High Delay alignment:
a. Place CAL MIC in Position 1 as shown in Figure 4.
b. Set reference level for AC 24 High Output:
i) *Un*MUTE the High Output.
ii) Adjust the High Output LEVEL control so that an adequate pink noise level is present.
iii) Press NORM on the RA 30 (some LEDs in High Output passband should indicate green).
iv) Adjust the High Output LEVEL so the RA 30 LED, at the Hi-Mid / High crossover frequency, is green.
v) MUTE the High Output.
c. Set reference level for AC 24 Hi-Mid Output:
i) *Un*MUTE the Hi-Mid Output.
ii) Adjust the Hi-Mid Output LEVEL so the RA 30 LED, at the Hi-Mid / High crossover frequency, is green.
d. Set the High Output DELAY:
i) Referring to Figure 4, note the Hi-Mid Output is the furthest back and requires no delay.
ii) *Un*MUTE the Hi-Mid and High Outputs.
iii) If the level goes down, driver polarity may be wrong. Check the driver polarity before proceeding.
iv) Adjust the High Output DELAY for maximum signal level in the RA 30 RTA band associated with the Hi-Mid / High crossover frequency.

7. Mid / Hi-Mid Delay alignment:
a. Place CAL MIC in Position 2 as shown in Figure 4.
b. Set the reference level for Hi-Mid Output:
i) *Un*MUTE the Hi-Mid Output.
ii) Adjust the Hi-Mid Output LEVEL so the RA 30 LED, associated with the Mid / Hi-Mid crossover frequency, is green.
iii) MUTE the Hi-Mid Output.
c. Set the reference level for the Mid Output:
i) *Un*MUTE the Mid Output
ii) Adjust AC 24 Mid Output Level so the RA 30 LED, associated with the Mid / Hi-Mid crossover frequency, is green.
d. Set Mid Output Delay:
i) Referring to Figure 4, note that the Hi-Mid Output is the furthest back and requires no delay.
ii) *Un*MUTE the Mid and Hi-Mid Outputs.
iii) If the level goes down, driver polarity may be

Downloaded from www.Manualslib.com manuals search engine

wrong. Check the driver polarity before proceeding.
iv) Adjust the Mid Output Delay for maximum signal level in the RA 30 RTA band associated with the Mid / Hi-Mid crossover frequency.

8. Low / Mid Delay alignment:
   a. Place CAL MIC in Position 3 as shown in Figure 4.
   b. Set the reference level for the Mid Output:
      i) *Un*MUTE the Mid Output.
      ii) Adjust the Mid Output LEVEL so the RA 30 LED associated with the Low / Mid crossover frequency is green.
      iii) MUTE the Mid Output
   c. Set the reference level for the Low Output:
      i) *Un*MUTE the Low Output.
      ii) Adjust the Low Output LEVEL so the RA 30 LED associated with the Low / Mid crossover frequency, is green.
   d. Set the Low Output Delay:
      i) The Mid Output Delay was previously set and must not be changed.
      ii) *Un*MUTE the Low and Mid Outputs.
      iii) If the level goes down, driver polarity may be wrong. Check the driver polarity before proceeding.
      iv) Adjust the Low Output Delay for maximum signal level in the RA 30 RTA band associated with the Low / Mid crossover frequency.

STEP THREE: Set CD Horn EQs (if required)

Constant Directivity (CD) Horns need additional equalization to help cover the same area as a long-throw horn. The AC 24 has independent CD Horn EQ circuits for Hi-Mid and High Outputs. It is important to know the 3 dB down point of the CD Horn driver's frequency response. The manufacturer of your driver can supply you with a response curve.

NOTE: If CD Horn EQ is not required, make sure the HORN EQ filters are OFF and frequency settings are at 8 kHz.

1. Find the frequency where the high end *starts* to roll off, and look for the frequency on the chart that has an amplitude 3 dB down from *that* point (toward the right, as the higher frequencies roll off).

2. Set the CD Horn EQ frequency to the frequency that corresponds to the 3 dB down point indicated on the graph and engage the filter. (an approximate is fine, it doesn't have to be exact)

STEP FOUR: Set Output Levels

1. Set all AC 24 Output LEVEL controls to minimum.

2. MUTE all AC 24 Outputs.

3. Set the INPUT LEVEL controls at unity (white dot between 7 & 8).

4. RA 30 Analyzer setup:
   a. Place the RA 30 CAL MIC on axis, 1 meter away from the Low driver as shown in Figure 5, Position-1.
   b. Set RA 30 Source to CAL MIC
   c. Set the RA 30 to RTA mode.
   d. Set RA 30 RTA Scale to 3 dB.
   e. Turn on Pink Noise.

5. Set Low Output Level:
   a. *Un*MUTE the Low Output and slowly turn up the LOW LEVEL control until you hear a healthy level of noise through the low frequency drivers (it should sound like rumble at this point).
   b. Press RA 30 NORM (the RTA scale automatically adjusts the maximum input signal to read green or 0 dB).
   c. Adjust the LOW LEVEL to light the most 0 dB LEDs in the Low frequency passband.
   d. MUTE the Low Output.

6. Set the Mid Output Level:
   a. Move the CAL MIC to Position 2.
   b. Without adjusting the realtime analyzer, *Un*MUTE the Mid Output and adjust the MID LEVEL control to light the most 0 dB LEDs in the Mid output passband.
   c. MUTE the Mid Output.

7. Set the Hi-Mid Output Level:
   a. Move the CAL MIC to Position 3.
   b. Without adjusting the realtime analyzer, *Un*MUTE the Hi-Mid Output and adjust the HI-MID LEVEL control to light the most 0 dB LEDs in the Hi-Mid output passband.
   c. MUTE the Hi-Mid Output.

8. Set High Output Level:
   a. Move the CAL MIC to Position 4.
   b. Without adjusting the realtime analyzer, *Un*MUTE the High Output and adjust the HIGH LEVEL control to light the most 0 dB LEDs in the High output passband.
   c. MUTE the High Output.

---

[1] *Note: Contrary to popular belief, dynamic headroom is optimized by setting amplifier sensitivity so that the amplifier clips at the same point the signal processing clips (typically +20 dBu to +24 dBu). For example, if the noise floor is –80 dBu and the maximum signal level is +20 dBu, then the dynamic range is 100 dB. If the amplifier is set to clip at +4 dBu, then the dynamic range is 84 dB. Or, 16 dB worse!*

Downloaded from www.Manualslib.com manuals search engine

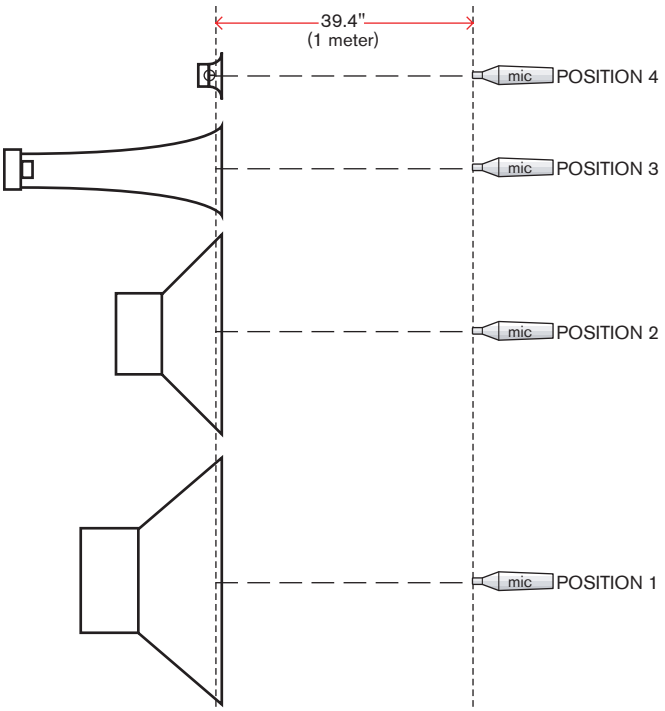

Figure 5. Setting Output Levels with a calibrated mic.

STEP FIVE: Setting Limiters

Each AC 24 Crossover Output has a Limiter. Each Limiter has an independent Threshold control with a range of 0 dB FS to –64 dB FS. To maintain spectral accuracy, Mid, Hi-Mid and High Limiters are linked. Linking is accomplished with wired-or control. These outputs all receive the same gain reduction regardless of which one initiates limiting. Independent Threshold indicators show which band is the source of the limit condition. The Low Output Limiter may operate independently. This is often desirable to prevent "pumping" or modulating higher frequencies. If desired, there is a Low Limit Link switch.

Method One: Driver SPL.

1. Do *not* change any of the previously calibrated AC 24 Output Level controls.

2. Do *not* change any amplifier gain controls.

3. MUTE all AC 24 Outputs.

4. Set all LIMIT controls to –64.

5. Determine the maximum SPL for each driver.
   a. Find the manufacturers sensitivity rating (dB SPL @ 1 watt, @ 1 meter) = dB SPL_{REF}
   b. Find the manufacturers maximum continuous power rating (P_{MAX})
   c. SPL_{MAX} = dB SPL_{REF} + [10*Log(P_{MAX})]

6. RA 30 setup:
   a. Place the RA 30 CAL MIC on axis, 1 meter away from the Low driver as shown in Figure 5, Position 1.
   b. Set the RA 30 SOURCE to CAL MIC.
   c. Set the RA 30 to SPL mode.
   d. Set the RA 30 SPL Filter to C-WEIGHT.
   e. Turn on the RA 30 PINK NOISE.

7. Make sure the Pink Noise Level coming into the crossover is able to light the red OL indicator.

8. Set SPL_{MAX} for each driver (one Output at a time):
   a. Depending on the maximum safe SPL rating of your system, you may want to use ear protection.
   b. Place the CAL MIC on axis at 1 meter (see Figure 5).
   c. *Un*MUTE the AC 24 Output associated with the driver you are setting the Limiter for.
   d. Slowly increase the LIMIT Threshold until the RA 30 SPL meter reads the SPL_{MAX} calculated in step 4 for the driver you are setting the Limiter for.
   e. MUTE the associated AC 24 Output.
   f. Repeat for each driver.

Method Two: Voltage at the driver.

Method Two uses the voltage at the driver instead of the SPL. Using voltage is not as desirable as SPL because impedance often varies with frequencies. Manufacturers provide the maximum recommended continuous power (P) and Nominal Impedance (R) ratings for each Driver. The maximum voltage is calculated as follows:

- $V_{MAX} = \sqrt{(P*R)}$
  P = Maximum Power
  R = Nominal Impedance
- Calculate V_{MAX} for each driver.
- Follow the steps outlined above for setting Limiters using SPL. Simply substitute volt meter readings for RA 30 SPL readings.

System calibration is complete!

We highly recommend installing the included security cover As Soon As Possible!

Fix-It-With-The-Crossover School

Consider the following (now that you have worked so hard to accurately set up the crossover). Some maintain that a good active crossover can work alone like a parametric equalizer in the hands of an expert. This does require experience, skill, and the right equipment to back it up (not to mention a licensed set of ears). Regardless of which school you profess, the absolute importance and effectiveness of some kind of realtime analyzer in your system cannot be overstressed! Analyzers in general have come a long way. An analyzer saves tremendous amounts of time and provide the absolute consistency, accuracy, and plain old good sound that few ears on this earth can deliver. You'll wonder how you managed without one.

Downloaded from www.Manualslib.com manuals search engine