PULTEC
MICROPHONE AND BOOSTER
AMPLIFIER

MODEL MB - 1

The PULTEC Mode MB - 1 is a three stage, high gain, low noise pre-amplifier or booster amplifier designed for use in radio and television broadcast systems, recording studios, sound systems and laboratories.

The maximum gain of 48 db is continuously adjustable to a minimum of 28 db by connecting the appropriate resistor across a pair of terminals in the feedback circuit. At maximum gain there is 22 db of loop negative feedback. At minimum gain the negative feedback is 42 db. The instruction book includes a chart showing gain versus resistor value.

The input transformer is designed so that its secondary can be operated loaded or unloaded. In the unloaded condition, the transformer presents substantially an open circuit at its input terminals. This is desirable with certain types of microphones, because it increases the signal level at the input terminals of the amplifier, thereby improving the signal to noise ratio.

Tubes are shock mounted to reduce microphonics. Workmanship is of the highest quality, and all components are operated well below their normal ratings to assure long trouble free service.



- **Gain 48 db — Adjustable By Feedback**
- **Noise — 120 dbm Equivalent Input**
- **Distortion 0.5% at +20 dbm**
- **20 cps to 20 kcs ±0.5 db**
- **Power Supply Self Contained**
- **Rock Mount 3½ x 19 Inch Panel**

Specifications

TRANSFORMERS:
Peerless audio and Chicago power.

TUBES:
1 each 12AX7, 12AU7, 6X4 included.

POWER REQUIRED:
117 Volts, 50/60 cps, 25 watts.

DIMENSIONS:
Standard Rack Panel 3½ x 19 inches.
Depth behind panel 7¾ inches.

PANEL FINISH:
Pultec blue-gray baked enamel. Engraved.

NET WEIGHT:
10 Pounds.

Licensed under patents of the Western Electric Company

GAIN:
48 db from 600 ohm input to 600 ohm output. Gain is continuously adjustable to 28 db by connecting proper resistor in feedback circuit. Additional 6 db of gain with input transformer unloaded for microphone use.

OUTPUT LEVEL:
+20 dbm into 600 ohms with less than 0.5% total harmonic distortion from 50 cps to 20 kcs, and less than 1% at 30 cps.

OUTPUT NOISE:
Equivalent to an input noise of —120 dbm or lower.
Noise at output with 28 db gain is —92 dbm.
Noise at output with 48 db gain is —72 dbm.

FREQUENCY RESPONSE:
20 cps to 20 kcs { ½db — input transformer loaded / 1 db — input transformer unloaded

INPUT TRANSFORMER:
50/150/300/600 ohms. Center tap available on 150 and 600 ohms. 90 db of magnetic shielding. Primary balanced to attenuate longitudinal currents more than 50 db. Electrostatic Shield.

OUTPUT TRANSFORMER:
For use into loads of 50/150/300/600 ohms.

PULSE TECHNIQUES, INC.
1411 PALISADE AVE., WEST ENGLEWOOD, NEW JERSEY
CABLE ADDRESS: PULTEC

PULTEC

MODEL MB-1 AMPLIFIER

1. DESCRIPTION

The Model MB-1 is a three stage, high gain, low noise pre-amplifier or booster amplifier designed for use in radio and television broadcast systems, recording studios, sound systems and laboratories.

2. GAIN

The gain is continuously adjustable over a range of 20 db by changing the amount of negative feedback. At maximum gain there is 22 db of loop, negative feedback. At minimum gain the negative feedback is 42 db.

	MINIMUM GAIN	MAXIMUM GAIN
INPUT TRANSFORMER TERMINATED (Reflects matching impedance to signal source.)	28 db	48 db
INPUT TRANSFORMER UNTERMINATED (Reflects open circuit to signal source.)	34 db	54 db

Table I shows gain versus the nearest standard resistor value. The Model MB-1 is normally shipped with the input transformer terminated and with minimum gain, ie., 28 db. To increase the gain it is only necessary to solder the proper resistor across the terminals provided for this purpose. These terminals are easily accessible by removing the top cover plate of the amplifier. They are just to the left of the tube sub-assembly and are marked (1) and (2). Wire wound resistors are recommended in the interest of minimum noise. A top quality 5 or 10 watt wire wound resistor is excellent and economical for this purpose.

At a glance, this may seem to be an unduly awkward method for setting the gain of an amplifier. However, where an over-all feedback loop is employed to minimize distortion, it is not practical to employ an inter-stage gain control. Consequently, the signal level can be controlled only at the input or at the output. If the input signal level is controlled, then the output noise level is always that corresponding to

3. Input Transformer

The input transformer is designed so that it's secondary can be operated loaded or unloaded. In the loaded condition, the transformer reflects a matching impedance to the signal source. In the unloaded condition, the transformer reflects substantially an open circuit at it's input terminals. This is desirable with certain signal sources, including many microphones, because it increases the signal level at the input terminals of the amplifier, thereby improving the signal to noise ratio.

Unless otherwise specified or indicated, the model MB-1 is shipped with the input transformer loaded, and it is strapped to reflect a 600 ohm impedance at the input terminals of the amplifier.

To remove the loading on the input transformer, simply remover the 82K ohm resistor that is connected across terminals 7 and 12 of the transformer.

A chart on the circuit diagram shows the strapping of the input transformer for impedances of 50, 150, 300, and 600 ohms.

One of the input terminals should be connected to the chassis ground terminal when the amplifier is fed from a singnal source that has one side grounded.

4. Output Transformer

The output transformer is normally supplied connected to feed a 600 ohm load. It can be re-strapped for other impedances as shown in the chart on the circuit dia.

In common with many amplifiers that imploy negative feedback from the output stage to the input stage, the MB-1 has an output impedance that is relatively low. For the majority of applications, this low output impedance is advantageous. In those cases where it is desirable to match the load impedance--for example when feeding into a high pass or low pass filter--the amplifier impedance can be built out by connecting a resistor in series with the output terminals. Approximately 400 ohms is recommended in the case of a 600 ohm load. In a balanced circuit this resistance should be equally divided between the two legs,

One of the amplifier output terminals should be connected to the chassis ground terminal when the amplifier is used to feed a load that has one side grounded.

5. ELECTRICAL CHARACTERISTICS

GAIN: See section 2.

INPUT IMPEDANCE: See section 3.

LOAD IMPEDANCE: See section 4.

OUTPUT LEVEL: +20 dbm into 600 ohms with less than 0.5% total harmonic distortion from 50 cps to 20K cps and less than 1% at 30 cps.

OUTPUT NOISE: Equivalent to an input noise of -120 dbm or lower.
Output noise with 28 db gain is -92 dbm.
Output noise with 48 db gain is -72 dbm.

FREQUENCY RESPONSE: 20 cps to 20K cps
1/2 db -- input transformer loaded
1 db -- input transformer unloaded

TUBES: 1 each 12AX7, 12AU7, 6X4.
No substitution of tube types is recommended.

POWER REQUIRED: 117 volts, 50/60 cps, 25 watts.

6. MECHANICAL CHARACTERISTICS

DIMENSIONS: Standard rack panel 3 1/2 X 19 inches
Depth behind panel 7 3/4 inches.

PANEL FINISH: Pultec blue-grey baked enamel.
Engraved.

NET WEIGHT: 10 pounds.

This amplifier is licensed under patents of the Western Electric Co.

DB GAIN INPUT TERM TERMINATED	DB GAIN INPUT TERM UNTERMINATED	RESISTOR OHMS
29	34	MINIMUM GAIN NO RESISTOR
29	35	10000
30	36	4500
31	37	3000
32	38	2000
33	39	1500
34	40	1100
35	41	800
36	42	700
37	43	500
38	44	400
39	45	350
40	46	250
41	47	225
42	48	150
43	49	125
44	50	100
45	51	75
46	52	50
47	53	30
48	54	MAXIMUM GAIN TERMINALS SHORTED

TABLE I

maximum gain of the amplifier. If the output signal level is controlled, then the maximum signal level that can be delivered to the load is reduced as the gain is reduced. In contrast to the above methods which employ a fixed gain amplifier and then reduce the signal level either at the input or the output, the Pultec MB-1 permits adjustment of the gain of the amplifier to just the value required to accept the full input signal and raise it to just the level desired at the output. Thus the signal to noise ratio is always preserved at its maximum value, because the input signal is never attenuated before reaching the first tube. The distortion is minimized because the output stage never develops more power than it is desired to feed to the load -- as it would have to do if a pad were used in the output circuit.

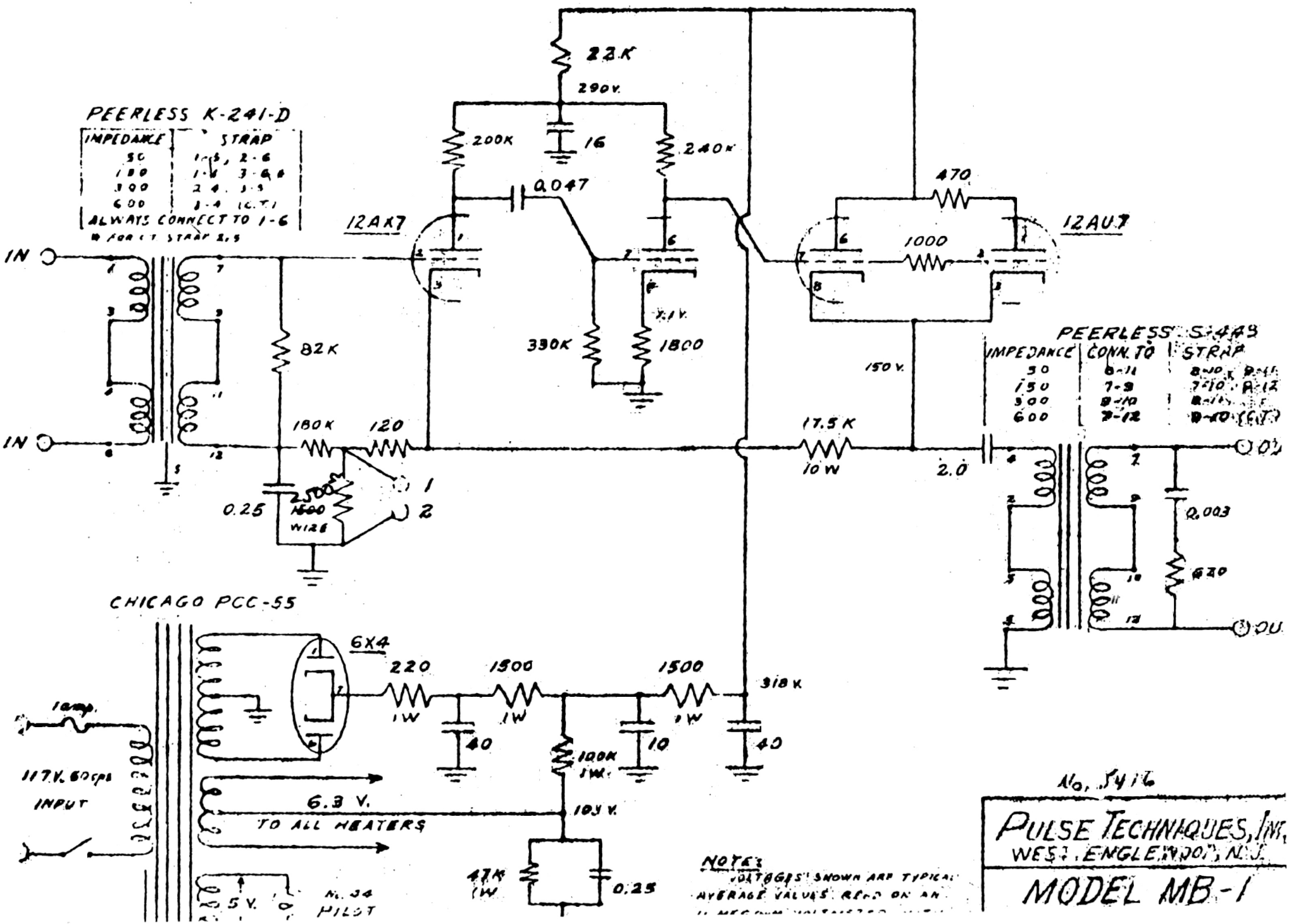
PEERLESS K-241-D
IMPEDANCE
STRAP
50
150
300
600
ALWAYS CONNECT TO 1-6
IN
IN
82K
180K
120
0.25
2500
1600
W126
1
2
12AX7
22K
290V.
200K
16
240K
0.047
330K
1800
X.1V.
12AU7
470
1000
150V.
17.5K
10W
2.0
PEERLESS S-4A3
IMPEDANCE
CONN. TO
STRAP
50
150
300
600
0.003
620
CHICAGO PCC-55
6X4
220
1900
1500
318K
1W
40
100K
1W
10
40
1amp.
117V. 60cps
INPUT
6.3 V.
TO ALL HEATERS
105 V.
47K
1W
0.25
5 V.
No. 34
PILOT
NOTES:
No. 5416
PULSE TECHNIQUES, INC.
WEST ENGLEWOOD, N.J.
MODEL MB-1

PEERLESS K-241-D

IMPEDANCE	STRAP
50	1-5, 2-6
150	1-4, 3-6 *
300	2-4, 3-5
600	3-4, (C.T.)
Always connect to 1-6	

* For C.T. Strap 2-5

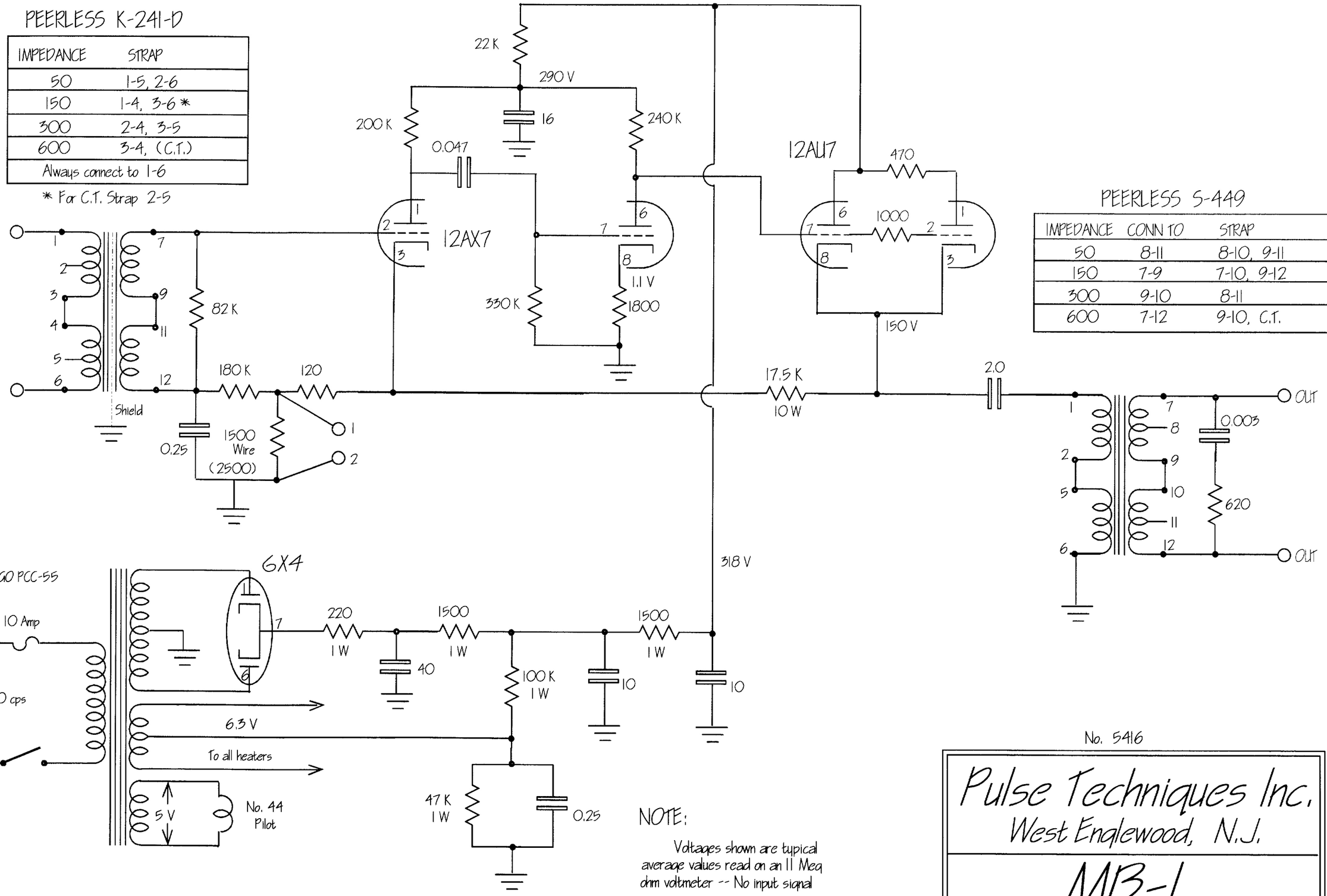

NOTE:

Voltages shown are typical average values read on an 11 Meg ohm voltmeter -- No input signal

PEERLESS S-449

IMPEDANCE	CONN TO	STRAP
50	8-11	8-10, 9-11
150	7-9	7-10, 9-12
300	9-10	8-11
600	7-12	9-10, C.T.

No. 5416

Pulse Techniques Inc.

West Englewood, N.J.

MB-1