

Yorkville

WEB: www.yorkville.com

WORLD HEADQUARTERS

CANADA

Yorkville Sound Limited
550 Granite Court
Pickering, Ontario
L1W 3Y8 CANADA

Voice: 905-837-8481
Fax: 905-837-8746

U.S.A.

Yorkville Sound Inc.
4625 Witmer Industrial Estate
Niagara Falls, New York
14305, USA

Voice: 716-297-2920
Fax: 716-297-3689

Quality and Innovation Since 1963

Printed in Canada

Yorkville

SERVICE MANUAL

PS10P, PS12P & PS15P

SMT Disclaimer

Due to the complex nature of the use of SMT installed components in Yorkville equipment, we highly caution all service technicians in attempting to repair or replace SMT factory installed components.

Many of these components may be glued prior to initial soldering.

Replacing SMT components requires expensive specialized de-soldering equipment and training.

Yorkville Sound will repair and replace defective SMT components to ensure proper quality assurance and installation is maintained.

Manual-Service-PS10P-PS12P-PS15P-00-1v6

IMPORTANT SAFETY INSTRUCTIONS

This lightning flash with arrowhead symbol, within an equilateral triangle, is intended to alert the user to the presence of uninsulated "dangerous voltage" within the product's enclosure that may be of sufficient magnitude to constitute a risk of electric shock to persons.

Ce symbole d'éclair avec tête de flèche dans un triangle équilatéral est prévu pour alerter l'utilisateur de la présence d'un «voltage dangereux» non-isolé à proximité de l'enceinte du produit qui pourrait être d'ampleur suffisante pour présenter un risque de choque électrique.

CAUTION • AVIS

RISK OF ELECTRIC SHOCK DO NOT OPEN
RISQUE DE CHOC ELECTRIQUE NE PAS OUVRIR

IEC 60417-5041 **CAUTION: HOT SURFACE ATTENTION: SURFACE CHAUDE**

S2125A

The exclamation point within an equilateral triangle is intended to alert the user to the presence of important operating and maintenance (servicing) instructions in the literature accompanying the appliance.

Le point d'exclamation à l'intérieur d'un triangle équilatéral est prévu pour alerter l'utilisateur de la présence d'instructions importantes dans la littérature accompagnant l'appareil en ce qui concerne l'opération et la maintenance de cet appareil.

FOLLOW ALL INSTRUCTIONS

Instructions pertaining to a risk of fire, electric shock, or injury to a person

CAUTION: TO REDUCE THE RISK OF ELECTRIC SHOCK, DO NOT REMOVE COVER (OR BACK). NO USER SERVICEABLE PARTS INSIDE. REFER SERVICING TO QUALIFIED SERVICE PERSONNEL. THIS DEVICE IS FOR INDOOR USE ONLY!

Read Instructions: The Owner's Manual should be read and understood before operation of your unit. Please, save these instructions for future reference and heed all warnings.

Clean only with dry cloth.

Packaging: Keep the box and packaging materials, in case the unit needs to be returned for service.

Warning: To reduce the risk or fire or electric shock, do not expose this apparatus to rain or moisture. *Do not use this apparatus near water!*

Warning: When using electric products, basic precautions should always be followed, including the following:

Power Sources

Your unit should be connected to a power source only of the voltage specified in the owners manual or as marked on the unit. This unit has a polarized plug. Do not use with an extension cord or receptacle unless the plug can be fully inserted. Precautions should be taken so that the grounding scheme on the unit is not defeated. An apparatus with CLASS I construction shall be connected to a Mains socket outlet with a protective earthing ground. Where the MAINS plug or an appliance coupler is used as the disconnect device, the disconnect device shall remain readily operable.

Hazards

Do not place this product on an unstable cart, stand, tripod, bracket or table. The product may fall, causing serious personal injury and serious damage to the product. Use only with cart, stand, tripod, bracket, or table recommended by the manufacturer or sold with the product. Follow the manufacturer's instructions when installing the product and use mounting accessories recommended by the manufacturer. Only use attachments/accessories specified by the manufacturer
Note: Prolonged use of headphones at a high volume may cause health damage on your ears.

The apparatus should not be exposed to dripping or splashing water; no objects filled with liquids should be placed on the apparatus.

Terminals marked with the "lightning bolt" are hazardous live; the external wiring connected to these terminals require installation by an instructed person or the use of ready made leads or cords.

Ensure that proper ventilation is provided around the appliance. Do not install near any heat sources such as radiators, heat registers, stoves, or other apparatus (including amplifiers) that produce heat.

No naked flame sources, such as lighted candles, should be placed on the apparatus.

Power Cord

Do not defeat the safety purpose of the polarized or grounding-type plug. A polarized plug has two blades with one wider than the other. A grounding type plug has two blades and a third grounding prong. The wide blade or the third prong are provided for your safety. If the provided plug does not fit into your outlet, consult an electrician for replacement of the obsolete outlet. The AC supply cord should be routed so that it is unlikely that it will be damaged. Protect the power cord from being walked on or pinched particularly at plugs. If the AC supply cord is damaged DO NOT OPERATE THE UNIT. To completely disconnect this apparatus from the AC Mains, disconnect the power supply cord plug from the AC receptacle. The mains plug of the power supply cord shall remain readily operable.

Unplug this apparatus during lightning storms or when unused for long periods of time.

Service

The unit should be serviced only by qualified service personnel. Servicing is required when the apparatus has been damaged in any way, such as power-supply cord or plug is damaged, liquid has been spilled or objects have fallen into the apparatus, the apparatus has been exposed to rain or moisture, does not operate normally, or has been dropped.

SUIVEZ TOUTES LES INSTRUCTIONS

Instructions relatives au risque de feu, choc électrique, ou blessures aux personnes

AVIS: AFIN DE REDUIRE LES RISQUE DE CHOC ELECTRIQUE, N'ENLEVEZ PAS LE COUVERT (OU LE PANNEAU ARRIERE) NE CONTIENT AUCUNE PIECE REPARABLE PAR L'UTILISATEUR. CONSULTEZ UN TECHNICIEN QUALIFIE POUR L'ENTRETIENT CE PRODUIT EST POUR L'USAGE À L'INTÉREUR SEULEMENT

Veuillez Lire le Manuel: Il contient des informations qui devraient êtres comprises avant l'opération de votre appareil. Conservez. Gardez S.V.P. ces instructions pour consultations ultérieures et observez tous les avertissements.

Nettoyez seulement avec le tissu sec.

Emballage: Conservez la boite au cas ou l'appareil devait être retourner pour réparation.

Avertissement: Pour réduire le risque de feu ou la décharge électrique, n'exposez pas cet appareil à la pluie ou à l'humidité. *N'utilisez pas cet appareil près de l'eau!*

Attention: Lors de l'utilisation de produits électrique, assurez-vous d'adhérer à des précautions de bases incluant celle qui suivent:

Alimentation

L'appareil ne doit être branché qu'à une source d'alimentation correspondant au voltage spécifié dans le manuel ou tel qu'indiqué sur l'appareil. Cet appareil est équipé d'une prise d'alimentation polarisée. Ne pas utiliser cet appareil avec un cordon de raccordement à moins qu'il soit possible d'insérer complètement les trois lames. Des précautions doivent êtres prises afin d'eviter que le système de mise à la terre de l'appareil ne soit désengagé. Un appareil construit selon les normes de CLASS I devrait être raccordé à une prise murale d'alimentation avec connexion intacte de mise à la masse. Lorsqu'une prise de branchement ou un coupleur d'appareils est utilisée comme dispositif de débranchement, ce dispositif de débranchement devra demeurer pleinement fonctionnel avec raccordement à la masse.

Risque

Ne pas placer cet appareil sur un chariot, un support, un trépied ou une table instables. L'appareil pourrait tomber et blesser quelqu'un ou subir des dommages importants. Utiliser seulement un chariot, un support, un trépied ou une table recommandés par le fabricant ou vendus avec le produit. Suivre les instructions du fabricant pour installer l'appareil et utiliser les accessoires recommandés par le fabricant. Utilisez seulement les attachements/accessoires indiqués par le fabricant
Note: L'utilisation prolongée des écouteurs à un volume élevé peut avoir des conséquences néfastes sur la santé sur vos oreilles. .

Il convient de ne pas placer sur l'appareil de sources de flammes nues, telles que des bougies allumées.

L'appeil ne doit pas être exposé à des égouttements d'eau ou des éclaboussures et qu'aucun objet rempli de liquide tel que des vases ne doit être placé sur l'appareil.

Assurez que lappareil est fourni de la propre ventilation. Ne procédez pas à l'installation près de source de chaleur tels que radiateurs, registre de chaleur, fours ou autres appareils (incluant les amplificateurs) qui produisent de la chaleur.

Les dispositifs marqués d'une symbole "d'éclair" sont des parties dangereuses au toucher et que les câblages extérieurs connectés à ces dispositifs de connection extérieure doivent être effectivés par un opérateur formé ou en utilisant des cordons déjà préparés.

Cordon d'Alimentation

Ne pas enlever le dispositif de sécurité sur la prise polarisée ou la prise avec tige de mise à la masse du cordon d'alimentation. Une prise polarisée dispose de deux lames dont une plus large que l'autre. Une prise avec tige de mise à la masse dispose de deux lames en plus d'une troisième tige qui connecte à la masse. La lame plus large ou la tige de mise à la masse est prévu pour votre sécurité. La prise murale est désuète si elle n'est pas conçue pour accepter ce type de prise avec dispositif de sécurité. Dans ce cas, contactez un électricien pour faire remplacer la prise murale. Évitez d'endommager le cordon d'alimentation. Protégez le cordon d'alimentation. Assurez-vous qu'on ne marche pas dessus et qu'on ne le pince pas en particulier aux prises. N'UTILISEZ PAS L'APPAREIL si le cordon d'alimentation est endommagé. Pour débrancher complètement cet appareil de l'alimentation CA principale, déconnectez le cordon d'alimentation de la prise d'alimentation murale. Le cordon d'alimentation du bloc d'alimentation de l'appareil doit demeurer pleinement fonctionnel.

Débranchez cet appareil durant les orages ou si inutilisé pendant de longues périodes.

Service

Consultez un technicien qualifié pour l'entretien de votre appareil. L'entretien est nécessaire quand l'appareil a été endommagé de quelque façon que se soit. Par exemple si le cordon d'alimentation ou la prise du cordon sont endommagés, si il y a eu du liquide qui a été renversé à l'intérieur ou des objets sont tombés dans l'appareil, si l'appareil a été exposé à la pluie ou à l'humidité, si il ne fonctionne pas normalement, ou a été échappé.

IMPORTANT SAFETY INSTRUCTIONS (UL60065)

The Lightning Flash with arrowhead symbol within an equilateral triangle, is intended to alert the user to the presence of uninsulated "dangerous voltage" within the product enclosure that may be of sufficient magnitude to constitute a risk of shock to persons

The exclamation point within an equilateral triangle is intended to alert the user to the presence of important operating and maintenance (servicing) instructions in the literature accompanying the product

1. Read these instructions.
2. Keep these instructions.
3. Heed all warnings.
4. Follow all instructions.
5. Do not use this apparatus near water.
6. Clean only with dry cloth.
7. Do not block any ventilation openings. Install in accordance with the manufacturer's instructions.
8. Do not install near any heat sources such as radiators, heat registers, stoves, or other apparatus (including amplifiers) that produce heat.
9. Do not defeat the safety purpose of the polarized or grounding-type plug. A polarized plug has two blades with one wider than the other. A grounding type plug has two blades and a third grounding prong. The wide blade or the third prongs are provided for your safety. If the provided plug does not fit into your outlet, consult an electrician for replacement of the obsolete outlet.
10. Protect the power cord from being walked on or pinched particularly at plugs, convenience receptacles, and the point where they exit from the apparatus.
11. Only use attachments/accessories specified by the manufacturer.
12. Use only with the cart, stand, tripod, bracket, or table specified by the manufacturer, or sold with the apparatus. When a cart is used, use caution when moving the cart/apparatus combination to avoid injury from tip-over.
13. Unplug this apparatus during lightning storms or when unused for long periods of time.
14. Refer all servicing to qualified service personnel. Servicing is required when the apparatus has been damaged in any way, such as power-supply cord or plug is damaged, liquid has been spilled or objects have fallen into the apparatus, the apparatus has been exposed to rain or moisture, does not operate normally, or has been dropped.

WARNING:

- To reduce the risk of fire or electric shock, do not expose this apparatus to rain or moisture and objects filled with liquids, such as vases, should not be placed on this apparatus.
- To completely disconnect this apparatus from the ac mains, disconnect the power supply cord plug from the ac receptacle.
- The mains plug of the power supply cord or appliance coupler shall remain readily accessible.

Le symbole représentant un éclair avec une flèche à l'intérieur d'un triangle équilatéral est utilisé pour prévenir l'utilisateur de la présence d'une tension électrique dangereuse non isolée à l'intérieur de l'appareil. Cette tension est d'un niveau suffisamment élevé pour représenter un risque d'électrocution

Le symbole représentant un point d'exclamation à l'intérieur d'un triangle équilatéral, signale à l'utilisateur la présence d'instructions importantes relatives au fonctionnement et à l'entretien de l'appareil dans cette notice d'installation

1. Lisez ces instructions.
2. Conservez ces instructions.
3. Respecter tous les avertissements.
4. Suivez toutes les instructions.
5. N'utilisez pas l'appareil près de l'eau.
6. Nettoyer uniquement avec chiffon sec.
7. Ne bloquez pas les ouvertures de ventilation. Installer en suivant les instructions du fabricant.
8. Ne pas installer près des sources de chaleur telles que radiateurs, bouches de chaleur, four ou autres appareils (y compris les amplificateurs) produisant de la chaleur.
9. N'annulez pas l'objectif sécuritaire de la fiche polarisée ou de la tige de mise à la terre. Une fiche polarisée possède deux lames avec une plus large que l'autre. Une prise avec mise à la terre possède deux lames et une troisième tige. La lame large ou la troisième tige sont fournis pour votre sécurité. Si la fiche n'entre pas dans votre prise, consultez un électricien pour remplacer la prise obsolète.
10. Protéger le cordon d'alimentation des piétinements ou pincements en particulier près des fiches, des prises de courant et au point de sortie de l'appareil.
11. Utilisez uniquement les accessoires spécifiés par le fabricant.
12. Utiliser uniquement avec un charriot, stand, trépied ou une table spécifiée par le fabricant, ou vendus avec l'appareil.
13. Débranchez l'appareil durant un orage ou lorsqu'il reste inutilisé pendant de longues périodes de temps.
14. Confiez toute réparation à un technicien qualifié. Une réparation est nécessaire lorsque l'appareil a été endommagé de quelque façon que ce soit; comme lorsque le cordon d'alimentation ou la fiche est endommagé, lorsque du liquide a été renversé ou des objets sont tombés à l'intérieur, lorsque l'appareil a été exposé à la pluie ou l'humidité, ne fonctionne pas normalement, ou est tombé.

AVERTISSEMENT:

- Pour réduire les risques d'incendie ou de choc électrique, ne pas exposer cet appareil à la pluie ou à l'humidité et ne placez pas d'objets contenant des liquides, tels que des vases, sur l'appareil.
- Pour isoler totalement cet appareil de l'alimentation secteur, débranchez totalement son cordon d'alimentation du réceptacle CA.
- La prise du cordon d'alimentation ou du prolongateur, si vous en utilisez un comme dispositif de débranchement, doit rester facilement accessible

CAUTION
TO PREVENT ELECTRIC SHOCK HAZARD,
DO NOT CONNECT TO MAINS POWER SUPPLY
WHILE GRILLE IS REMOVED.

AVIS
POUR PRÉVENIR LES RISQUES D'ÉLECTROCUTION,
NE PAS RACCORDER A L'ALIMENTATION ÉLECTRIQUE ALORS
QUE LA GRILLE EST RETIRÉE.

PS10P•PS12P•PS15P
Paraline Powered Speaker Enclosure

#	Part#	Description	qty
Labeled Components			
1	Z9914	PSAMP CAST CHASSIS	1
2	3074	POWER CORD 3M V-LOCK (N.A)	1
3	9417SS	#8 X 3/4 SS PAN QUAD PLASTITE BO&W	14
4	3466	RCA DUAL PCB MT VERT GOLD 24MM	1
5	4063	1/4IN ISO JCK PCMT VT STER RT SWT	1
6	4459	_10K B LIN 9MM DET HI TORQ P32	2
7	8653	LOW PROFILE POINTER AT 12 KNOB	3
8	4010	XLR FEML PCB MT VERT 24MM AA-SERIES	1
9	3522	DPDT MINI PC VERT SNP ALT	3
10	8637	ROUND PUSH BUTTON 1/4" BLK 24MM	3
11	4100	XLR MALE PCB MT VERT	1
12	4090	1/4IN &XLR PCB MT VERT COMBO NCJ6-V	1
13	10010	CAST HANDLE PS10P/PS12P/PS15P	2 or 3
14	8206	YORKVILLE LOGO METALPHOTO	1
15	4184	DPST ROKR SW QUIK 250" AC/PWR IEC6	1
16	4088	RECEPTACLE:V-LOCK INLET	1
17	Z1479	YORKVILLE LOGO 1.23 X 1.23 LEXAN	1
18	8118	PS10P SKID PAD 1/2"X 1 1/4"X 5 7/8"	2
19	8119	PS12P SKID PAD 1/2"X 1 1/4"X 6 3/4"	2
20	8120	PS15P SKID PAD 1/2"X 1 1/4"X 9 1/2"	2
21	8116	RUBBER FOOT 0.750"X2.500 PS SERIES	20
22	8117	RUBBER FOOT 0.620"X1.500" PS SERIES	2
23	8935	1/4-20 X 23MM JOINT CONN. BOLT B/O	6
24	2491	10.00 AMP CIRCUIT BREAKER TE	1
25	9421SS	SPEAKER SCREW	8
26	8938	INSERT NUT	6
27	8483	ADAPTOR,SPEAKER STAND,METAL,BLACK	1
28	9422SS	1/4-20X1X1/4 SS CARRIAGE BOLT	20 tot

1 CAST CHASSIS



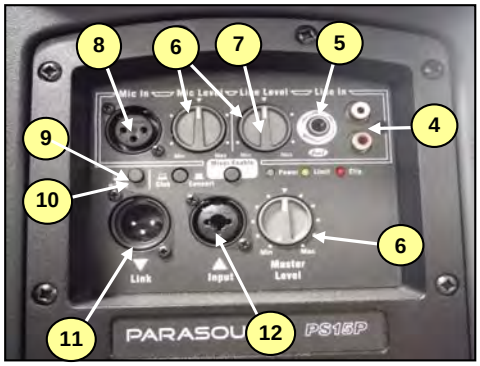

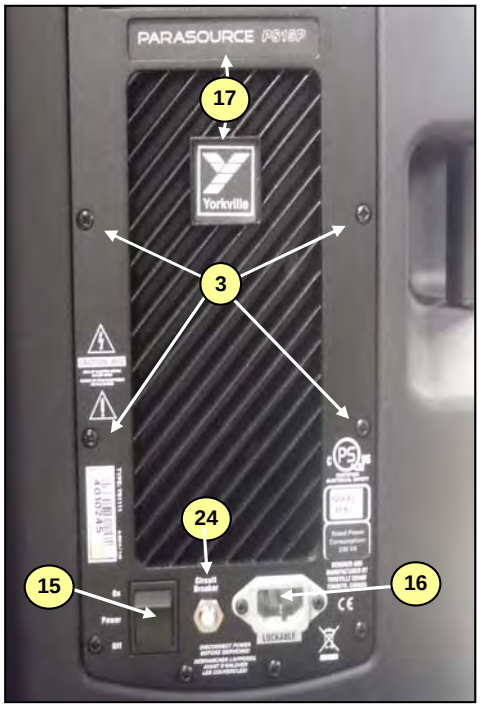

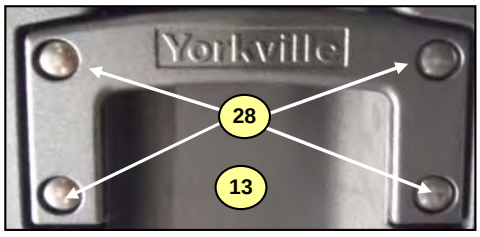

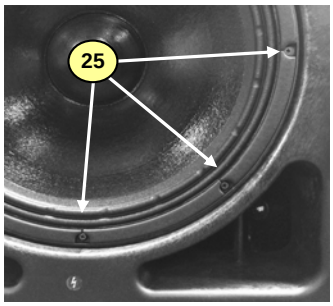

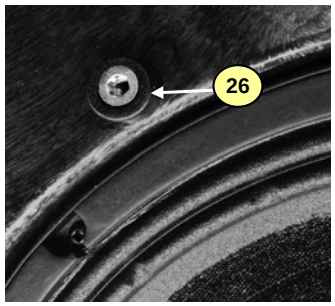

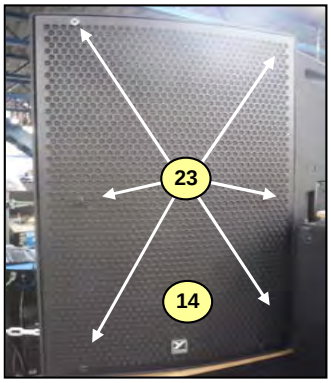

27 Speaker Stand Adapter Not Shown

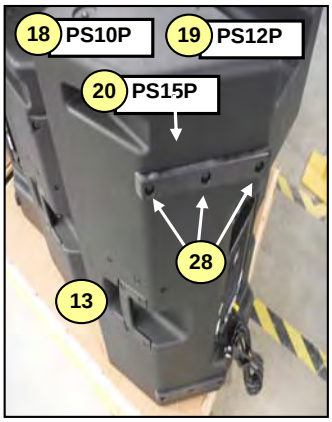

PS10P Parts List 7/4/2018

YS #	Description	Qty.	YS #	Description	Qty.	YS #	Description	Qty.
6545	__1N 250V 20%CAP BLK 'Y' 10MM AC	4	5061	W125 2K87 1% 0805 SMT RES	1	8318	ADAU1401 28/56 DSP 2AD4DA SMT IC	2
5840	_22N 400V 10%CAP BLK RAD POLY FLM	2	7637	W125 3K32 1% 0805 SMT RES	9	7918	LM1117 REGULATOR 5V0 SMT SOT223	2
5516	_47N 2000V 10%CAP AXL POLYPROP BULK	1	8189	W125 4K02 0.1% 0805 SMT RES	9	7817	33078 DUAL OPAMP SMT SO-8	7
5827	150N 250V 20%CAP BLK 'X2' 15MM AC	1	7744	W250 4K7 5% 1206 SMT RES	2	7906	MC9S08GT60 MICROCNTRLLER SMT QFP44	1
5972	680N 400V 5%CAP BLK RAD POLY FLM	3	7679	W100 4K99 1% 0805 SMT RES	11	7922	06 CIR DUAL ROW HDR VT 0.1SPC SMT	1
5262	1U 275V 20%CAP BLK 'X2'26.0MM AC	2	8153	W125 5K36 1% 0805 SMT RES	2	7894	12.288MHZ CRYSTAL 4-PIN SMT	1
5665	1500U 100V 20%CAP BLK 22X35MM	8	7822	W100 7K50 1% 0805 SMT RES	3	7765	W063 10R 5% 0603 SMT RES	8
6845	MUR1640CTG 400V 8A DIODE DUAL CC	3	7681	W125 8K25 1% 0805 SMT RES	2	7728	W100 39R 5% 0805 SMT RES	3
6975	SPW35N60CFD MOSFET N-CN 600V TO-247	5	8321	W125 8K66 1% 0805 SMT RES	1	7854	W125 47R 5% 0805 SMT RES	1
6622	10R 20% THERMISTOR NTC	2	8095	1W00 10K 5% 2512 SMT RES	17	7624	W100 100R 1% 0805 SMT RES	2
3109	__25UH COIL E44 FERR 14T 19AWG LITZ	1	7761	W100 12K1 1% 0603 SMT RES	1	7708	W100 200R 1% 0805 SMT RES	1
6672	__64UH CHOKE 68T20AWG/T157-2 PCBMNT	2	7627	W100 13K 1% 0805 SMT RES	2	7635	W100 221R 1% 0805 SMT RES	1
6507	3.3MH COIL COMMON MODE 5A	2	4995	W125 14K0 1% 0805 SMT RES	1	7897	W125 330R 0.5% 0805 SMT RES	4
4208	10 CIR SOCKT DIL RA 0.1	1	8093	1W00 15K 5% 2512 SMT RES	5	7856	W125 470R 5% 0805 SMT RES	3
4167	2X2PIN 4.2MM RA HEADER VAL-U-LOK	1	7682	W125 17K8 1% 0805 SMT RES	1	7673	W100 475R 1% 0805 SMT RES	5
4146	3 PIN POWER PIN HEADER MALE POLZED	1	7634	W100 20K5 1% 0805 SMT RES	7	7898	W125 1K02 0.1% 0805 SMT RES	13
4974	W125 45K3 1% 0805 SMT RES	2	8182	W125 22K 5% 0805 SMT RES	2	7899	W125 1K800 0.1% 0805 SMT RES	6
3105	RELAY 1C 10AMP DC12 030MA PC-C	1	7636	W100 27K4 1% 0805 SMT RES	1	7676	W100 2K0 1% 0805 SMT RES	2
1668	PSAMP EMI SHIELD CASE	2	7900	W125 30K 0.5% 0805 SMT RES	2	7859	W125 2K2 5% 0805 SMT RES	1
7941	__8.2UH COIL 1210 SMT	1	8094	1W00 33K 5% 2512 SMT RES	3	7633	W100 2K74 1% 0805 SMT RES	5
8108	120UH COIL 0R4 10MMSQ SMT	5	8199	W125 34K0 1% 0805 SMT RES	2	7860	W125 4K7 5% 0805 SMT RES	1
7732	220.0UH COIL SMT	2	4971	1W00 39K 5% 2512 SMT RES	2	7679	W100 4K99 1% 0805 SMT RES	1
7974	1000UH 10% COIL 12MM SMT	1	4966	W125 40K2 1% 0805 SMT RES	3	7928	W125 10K00 0.1% 0805 SMT RES	20
5980	_10P 1000V 10%CAP 1206 SMT X7R	1	5074	W125 41K2 1% 0805 SMT RES	1	4952	W125 10K2 1% 0805 SMT RES	1
7748	_47P 100V 5%CAP 0805 SMT NPO	7	8157	1W00 47K 5% 2512 SMT RES	3	7823	W100 18K2 1% 0805 SMT RES	2
7927	100P 50V 10%CAP 0805 SMT NPO	2	7824	W125 47K5 1% 0805 SMT RES	4	7634	W100 20K5 1% 0805 SMT RES	1
7692	150P 50V 5%CAP 0805 SMT NPO	1	8051	W125 68K 5% 0805 SMT RES	2	5066	W125 22K1 1% 0805 SMT RES	2
8272	220P 100V 10%CAP 0805 SMT X7R	1	8228	W125 75K 1% 0805 SMT RES	4	7863	W125 33K 5% 0805 SMT RES	3
7931	270P 50V 5%CAP 0805 SMT NPO	1	8160	W125 91K 5% 0805 SMT RES	6	7864	W125 100K 5% 0805 SMT RES	1
7693	_1N 50V 5%CAP 0805 SMT NPO	6	7759	W250 100K 5% 1206 SMT RES	22	7866	W125 1M 5% 0805 SMT RES	2
7741	_2N2 50V 10%CAP 0805 SMT X7R	7	5000	W125 140K 1% 0805 SMT RES	1	7837	MMBT5401 PNP SOT-23 SMT	2
7694	_3N3 25V 5%CAP 0805 SMT NPO	5	7865	W125 150K 5% 0805 SMT RES	6	4007	.9 LED CUSTOM SPACER	3
7799	_5N6 50V 5%CAP 0805 SMT C0G	2	7630	W100 182K 1% 0805 SMT RES	2	3522	DPDT MINI PC VERT SNP ALT	3
7737	_10N 50V 10%CAP 0805 SMT X7R	15	7686	W100 274K 1% 0805 SMT RES	1	3601	RING TERMINAL 16AWG WIRE & #8 SCREW	14
8092	100N 450V 10%CAP 1206 SMT X7T	22	7639	W100 357K 1% 0805 SMT RES	2	4177	CONNECTOR HOUSING 4 POSITION 2X2	1
7601	220N 50V 10%CAP 1206 SMT X7R	1	4985	W125 562K 1% 0805 SMT RES	2	3575	CONN PLUG 3 POS. .084" V-2 FEMALE	1
8096	470N 100V 10%CAP 1206 SMT X7R	3	7651	W250 1M0 1% 1206 SMT RES	4	4175	CONNECTOR SOCKET TERMINAL 18-22AWG	6
7878	__1U 25V 20%CAP 1206 SMT X7R	32	7623	W125 1M50 1% 0805 SMT RES	1	8483	ADAPTOR,SPEAKER STAND,METAL,BLACK	7
7877	__2U2 100V 20%CAP 1812 SMT X7R	14	8165	MMBTA92 PNP SOT-23 SMT	21	10010	CAST HANDLE PS10P/PS12P/PS15P	4
7735	__4U7 50V 10%CAP 1210 SMT CER	13	7806	MMBF4391LT1 NCH JFET SOT-23 SMT T&R	4	7393	_8R 30W 1.00" DRIVER BMS	1
8088	_10U 16V 10%CAP 0805 SMT X6S	7	7884	IRS20957S DIG AUDIO DRVR SMT SOIC	3	8933	FLYWARE BOLT 1/4-20 W/PLASTIC CAP	5
7697	__22U 16V 5%CAP 5X5.5 SMT ELC	2	8002	TEST POINT MINIATURE SMT	19	9000	ADAPTOR FLANGE FOR HORN	1
7811	100U 25V 20%CAP 8X5.4 SMT ELE	1	8188	XF3955 GATE DRIVE XFMR SMT	2	8206	YORKVILLE LOGO METALPHOTO	1
8109	BAV21WS 200V 0A2 SOD323 SMT	36	8607	3/16X1/8X.06ID NYLON SPACER	5	8938	1/4-20X10MM INSERT NUT TYPE D	29
7965	DFLZ5V1-7 5V1 1W0 5% SMT ZEN	4	9067	1/8X5/16XID.64 NYLON SPACER	8	8934	7/16-20 UNF HEX NUT GRD 5 CLEAR ZNC	5
8076	MMSZ4690T1G 5V6 0W5 5% SMT ZEN	1	1249	XFMR O/P 400W PQ40/40 PS10,12,15P	1	PS10PCABINET	10"PS SET W/POWER BACK BLACK PLASTC	1
7996	SMAZ10-13-F 10V0 1W0 10% SMT ZEN	3	4459	_10K B LIN 9MM DET HI TORQ P32	3	9417SS	#8X3/4 SS PAN QUAD PLASTITE BO&W	14
7830	MM3Z12VT1G 12V0 0W2 5% SMT ZEN	7	6405	RED 3MM LED 2V1 20MA DIFFUSD	1	9421SS	#10X3/4 SS PAN QUAD PLASTITE BO&W	12
7617	BZX84C15LT1 15V0 0W225 ZEN SOT23	2	6400	YEL 3MM LED 2V1 20MA DIFFUSD	1	9085	1/4-20X1 1/2 PAN PHIL TRILOB TBZ	16
8159	SMAZ18-13-F 18V0 1W0 5% SMT ZEN	1	6408	GRN 3MM LED 2V2 20MA DIFFUSD	1	9404SS	1/4-20X23MM SS JOINT CONN BOLT BO	6
8185	SMBJ5371B 60V 5W0 DO214AA SMT ZEN	2	6543	48R 265V RESETTABLE THERMISTOR PTC	1	9418SS	1/4-20X3/4 SS FLAT PHIL MS BO&W	4
7987	UCC25600 RES MODE CTRL SMT SO8	1	4063	1/4IN ISO JCK PCMT VT STER RT SWT	1	9422SS	1/4-20X1X1/4 SS CARRIAGE BOLT BO&	20
8121	CNY17F-2S OPTO-COUPLER 6P SMT IC	3	3466	RCA DUAL PCB MT VERT GOLD 24MM	1	8879	M5 X 10 CHEESE PHIL MS ZINC CLEAR	2
8158	LNK306G OFFLINE SWITCH SMT SMD8B	8	4090	1/4IN &XLR PCB MT VERT COMBO NCJ6-V	1	7559	10" 4R 300WPGM CER SPEAKER	1
7661	LM393D DUAL COMPARATOR SMT SO-8	4	4100	XLR MALE PCB MT VERT	2	8489	1/4-20 MEDIUM LOCK WASHER TBZ	2
8124	TLV3201 SNGLE COMPARATOR SMT SOT235	4	4019	10 CIR SOCKT DIL VT 0.1	1	8995	3/8 STEEL FLAT WASHER, BO&W	5
7993	TL071CDR OPAMP JFET 3MHZ SO-8 SMT	4	3696	RELAY 1C 02AMP DC24 006MA PC-S	1	8492	7/16" SPLIT LOCK WASHER CLEAR ZINC	5
7998	W750 0R 1% 2010 SMT JMP	3	7941	__8.2UH COIL 1210 SMT	1	8817	#10 FLAT WASHER FOR 3/16 BOLT TBZ	16
7739	W250 1R 5% 1206 SMT RES	2	2910	120.0UH COIL SR4018T 1R6 SMT	1	8947	1.250ODX1/4ID FENDER WASHER ZINC CL	16
8183	1W00 2R0 1% 2512 SMT RES	1	7766	_15P 50V 5%CAP 0603 SMT NPO	1	8387	PS NEO SC41 1/16" X 0.5" X 100' ROL	39
8012	1W00 4R7 5% 2512 SMT RES	7	7813	_47P 50V 5%CAP 0805 SMT NPO	6	2491	10.00 AMP CIRCUIT BREAKER TE	1
8131	W500 10R 5% 1210 SMT RES	23	7931	270P 50V 5%CAP 0805 SMT NPO	1	4153	2POS XSISTOR TO220SPRING	5
7930	W250 22R 5% 1206 SMT RES	2	7871	470P 50V 5%CAP 0603 SMT NPO	5	3810	4" NYLON CABLE TIE	3
7670	W125 47R5 1% 0805 SMT RES	3	7603	680P 50V 5%CAP 0805 SMT C0G	2	8637	ROUND PUSH BUTTON 1/4" BLK 24MM	3
4964	W125 68R1 1% 0805 SMT RES	1	7605	__1N5 50V 5%CAP 0805 SMT NPO	2	8653C	LOW PROFILE POINTER AT 12 KNOB	3
7624	W100 100R 1% 0805 SMT RES	5	7966	__2N7 100V 10%CAP 0805 SMT X7R	3	3008	3P 18 AWG 25'AC LINE CORD	1
7635	W100 221R 1% 0805 SMT RES	2	7694	_3N3 25V 5%CAP 0805 SMT NPO	1	8241	MYLAR TYPE A .010"X12"X24"	1.022
7671	W125 249R0 1% 0805 SMT RES	2	7874	_10N 50V 5%CAP 1206 SMT NPO	1	4212	SARCON 30GTR THERMOPAD 35X40MM	4
7709	W100 301R 1% 0805 SMT RES	1	7798	_15N 50V 5%CAP 0805 SMT C0G	2	4139	3" 10C-28AWG RIBBON DIL SOCKETS	1
7672	W125 348R0 1% 0805 SMT RES	9	7696	_68N 50V 5%CAP 0805 SMT X7R	1	9001	4-40X5/16 PAN PH MS ZN W/STAR WASHR	11
7673	W100 475R 1% 0805 SMT RES	1	7767	100N 16V 10%CAP 0603 SMT X7R	37	9975	#4 X 1/2 PAN PHILIP TYPE A/B TBZ	7
7820	W100 499R 1% 0805 SMT RES	4	7878	1U 25V 20%CAP 1206 SMT X7R	1	8822	6-32X1/4 PAN PH MS MED L/W SEMS ZN	1
7646	W125 681R 1% 0805 SMT RES	1	7819	_10U 10V 10%CAP 1206 SMT X5R	10	8801	6-32X3/8 PAN PHIL TRILOBE TBZ	15
7621	W100 1K0 1% 0805 SMT RES	15	8140	_15U 35V 10%CAP 6032 SMT TNT	1	4088	RECEPTACLE:V-LOCK INLET	1
7675	W125 1K21 1% 0805 SMT RES	3	8139	_22U 25V 20%CAP 1210 SMT X7R	6	8482	3/8 1D FLAT WASHER	1
7796	W063 1K37 1% 0603 SMT RES	1	8141	100U 10V 20%CAP 3528 SMT TNT	1	8485	#6 SPLIT WASHER ZINC	3
7649	W125 1K50 1% 0805 SMT RES	1	8080	SMAJ150CA 150V 400W BIDIR SMT	11	4184	DPST ROKR SW QUIK 250" AC/PWR IEC6	1
8137	W125 1K62 1% 0805 SMT RES	6	7914	MMBZ5231B 5V1 0W35 5% SMT ZEN	2	10046	.5"X4" VIBRATION PAD PSA FLAT SIDE	2.837
7632	W100 2K32 1% 0805 SMT RES	3	7831	MM3Z15VT1G 15V0 0W2 5% SMT ZEN	1	9914	PSAMP SERIES CAST CHASSIS	1
7633	W100 2K74 1% 0805 SMT RES	1	7832	MM3Z18VT1G 18V0 0W2 5% SMT ZEN	2			

PS12P Parts List 7/4/2018

YS #	Description	Qty.	YS #	Description	Qty.	YS #	Description	Qty.
6545	__1N 250V 20%CAP BLK 'Y' 10MM AC	4	7631	W100 2K21 1% 0805 SMT RES	1	7914	MMBZ5231B 5V1 0W35 5% SMT ZEN	2
5840	_22N 400V 10%CAP BLK RAD POLY FLM	2	7632	W100 2K32 1% 0805 SMT RES	4	7831	MM3Z15VT1G 15V0 0W2 5% SMT ZEN	1
5516	_47N 2000V 10%CAP AXL POLYPROP BULK	1	7633	W100 2K74 1% 0805 SMT RES	3	7832	MM3Z18VT1G 18V0 0W2 5% SMT ZEN	2
5827	150N 250V 20%CAP BLK 'X2' 15MM AC	1	5061	W125 2K87 1% 0805 SMT RES	1	8318	ADAU1401 28/56 DSP 2AD4DA SMT IC	2
5972	680N 400V 5%CAP BLK RAD POLY FLM	4	7637	W125 3K32 1% 0805 SMT RES	12	7918	LM1117 REGULATOR 5V0 SMT SOT223	2
5262	1U 275V 20%CAP BLK 'X2'26.0MM AC	2	8189	W125 4K02 0.1% 0805 SMT RES	9	7817	33078 DUAL OPAMP SMT SO-8	7
5665	1500U 100V 20%CAP BLK 22X35MM	8	7744	W250 4K7 5% 1206 SMT RES	2	7906	MC9S08GT60 MICROCNTRLLER SMT QFP44	1
6845	MUR1640CTG 400V 8A DIODE DUAL CC	3	7679	W100 4K99 1% 0805 SMT RES	11	7922	06 CIR DUAL ROW HDR VT 0.1SPC SMT	1
6975	SPW35N60CFD MOSFET N-CN 600V TO-247	7	8153	W125 5K36 1% 0805 SMT RES	2	7894	12.288MHZ CRYSTAL 4-PIN SMT	1
6622	10R 20% THERMISTOR NTC	2	7822	W100 7K50 1% 0805 SMT RES	3	7765	W063 10R 5% 0603 SMT RES	8
3109	25UH COIL E44 FERR 14T 19AWG LITZ	1	7681	W125 8K25 1% 0805 SMT RES	2	7728	W100 39R 5% 0805 SMT RES	3
6672	__64UH CHOKE 68T20AWG/T157-2 PCBMNT	3	7710	W100 9K09 1% 0805 SMT RES	1	7854	W125 47R 5% 0805 SMT RES	1
6507	3.3MH COIL COMMON MODE 5A	2	8095	1W00 10K 5% 2512 SMT RES	21	7624	W100 100R 1% 0805 SMT RES	2
4208	10 CIR SOCKT DIL RA 0.1	1	7761	W100 12K1 1% 0603 SMT RES	1	7708	W100 200R 1% 0805 SMT RES	1
4167	2X2PIN 4.2MM RA HEADER VAL-U-LOK	1	7627	W100 13K 1% 0805 SMT RES	3	7635	W100 221R 1% 0805 SMT RES	1
4146	3 PIN POWER PIN HEADER MALE POLZED	1	4995	W125 14K0 1% 0805 SMT RES	1	7897	W125 330R 0.5% 0805 SMT RES	4
4974	W125 45K3 1% 0805 SMT RES	4	8093	1W00 15K 5% 2512 SMT RES	6	7856	W125 470R 5% 0805 SMT RES	3
3105	RELAY 1C 10AMP DC12 030MA PC-C	1	7682	W125 17K8 1% 0805 SMT RES	1	7673	W100 475R 1% 0805 SMT RES	5
1668	PSAMP EMI SHIELD CASE	2	7634	W100 20K5 1% 0805 SMT RES	7	7898	W125 1K02 0.1% 0805 SMT RES	13
7941	__8.2UH COIL 1210 SMT	1	8182	W125 22K 5% 0805 SMT RES	2	7899	W125 1K800 0.1% 0805 SMT RES	6
8108	120UH COIL 0R4 10MMSQ SMT	5	7636	W100 27K4 1% 0805 SMT RES	1	7676	W100 2K0 1% 0805 SMT RES	2
7732	220.0UH COIL SMT	2	7900	W125 30K 0.5% 0805 SMT RES	2	7859	W125 2K2 5% 0805 SMT RES	1
7974	1000UH 10% COIL 12MM SMT	1	8094	1W00 33K 5% 2512 SMT RES	4	7633	W100 2K74 1% 0805 SMT RES	5
5980	_10P 1000V 10%CAP 1206 SMT X7R	1	8199	W125 34K0 1% 0805 SMT RES	3	7860	W125 4K7 5% 0805 SMT RES	1
8010	_33P 100V 5%CAP 0603 SMT C0G	1	4971	1W00 39K 5% 2512 SMT RES	3	7679	W100 4K99 1% 0805 SMT RES	1
7748	_47P 100V 5%CAP 0805 SMT NPO	9	4966	W125 40K2 1% 0805 SMT RES	3	7928	W125 10K00 0.1% 0805 SMT RES	20
7927	100P 50V 10%CAP 0805 SMT NPO	2	5074	W125 41K2 1% 0805 SMT RES	1	4952	W125 10K2 1% 0805 SMT RES	1
7692	150P 50V 5%CAP 0805 SMT NPO	1	8157	1W00 47K 5% 2512 SMT RES	4	7823	W100 18K2 1% 0805 SMT RES	2
8272	220P 100V 10%CAP 0805 SMT X7R	2	7824	W125 47K5 1% 0805 SMT RES	5	7634	W100 20K5 1% 0805 SMT RES	1
7931	270P 50V 5%CAP 0805 SMT NPO	1	8051	W125 68K 5% 0805 SMT RES	2	5066	W125 22K1 1% 0805 SMT RES	2
7693	_1N 50V 5%CAP 0805 SMT NPO	6	8228	W125 75K 1% 0805 SMT RES	4	7863	W125 33K 5% 0805 SMT RES	3
7741	__2N2 50V 10%CAP 0805 SMT X7R	7	8160	W125 91K 5% 0805 SMT RES	6	7864	W125 100K 5% 0805 SMT RES	1
7783	__2N7 100V 10%CAP 0805 SMT C0G	1	7759	W250 100K 5% 1206 SMT RES	22	7866	W125 1M 5% 0805 SMT RES	2
7694	_3N3 25V 5%CAP 0805 SMT NPO	5	5000	W125 140K 1% 0805 SMT RES	1	7837	MMBT5401 PNP SOT-23 SMT	2
7799	__5N6 50V 5%CAP 0805 SMT C0G	3	7865	W125 150K 5% 0805 SMT RES	6	4007	.9 LED CUSTOM SPACER	3
7737	_10N 50V 10%CAP 0805 SMT X7R	15	7630	W100 182K 1% 0805 SMT RES	2	3522	DPDT MINI PC VERT SNP ALT	3
8092	100N 450V 10%CAP 1206 SMT X7T	24	7686	W100 274K 1% 0805 SMT RES	1	3601	RING TERMINAL 16AWG WIRE & #8 SCREW	14
7601	220N 50V 10%CAP 1206 SMT X7R	1	7639	W100 357K 1% 0805 SMT RES	2	4177	CONNECTOR HOUSING 4 POSITION 2X2	1
8096	470N 100V 10%CAP 1206 SMT X7R	3	4985	W125 562K 1% 0805 SMT RES	2	3575	CONN PLUG 3 POS. .084" V-2 FEMALE	1
7878	1U 25V 20%CAP 1206 SMT X7R	33	7651	W250 1M0 1% 1206 SMT RES	4	4175	CONNECTOR SOCKET TERMINAL 18-22AWG	6
7877	__2U2 100V 20%CAP 1812 SMT X7R	15	7623	W125 1M50 1% 0805 SMT RES	1	2491	10.00 AMP CIRCUIT BREAKER TE	1
7735	__4U7 50V 10%CAP 1210 SMT CER	15	8165	MMBTA92 PNP SOT-23 SMT	23	4153	2POS XSISTOR TO220SPRING	6
8088	_10U 16V 10%CAP 0805 SMT X6S	7	7806	MMBF4391LT1 NCH JFET SOT-23 SMT T&R	4	3810	4" NYLON CABLE TIE	3
7697	_22U 16V 5%CAP 5X5.5 SMT ELC	2	7884	IRS20957S DIG AUDIO DRVR SMT SOIC	4	8637	ROUND PUSH BUTTON 1/4" BLK 24MM	3
7811	100U 25V 20%CAP 8X5.4 SMT ELE	1	8002	TEST POINT MINIATURE SMT	21	8653C	LOW PROFILE POINTER AT 12 KNOB	3
8109	BAV21WS 200V 0A2 SOD323 SMT	43	8188	XF3955 GATE DRIVE XFMR SMT	2	3008	3P 18 AWG 25'AC LINE CORD	1
7965	DFLZ5V1-7 5V1 1W0 5% SMT ZEN	4	8607	3/16X1/8X.06ID NYLON SPACER	5	4212	SARCON 30GTR THERMOPAD 35X40MM	4
8076	MMSZ4690T1G 5V6 0W5 5% SMT ZEN	1	9067	1/8X5/16XID.64 NYLON SPACER	10	4139	3" 10C-28AWG RIBBON DIL SOCKETS	1
7996	SMAZ10-13-F 10V0 1W0 10% SMT ZEN	3	1249	XFMR O/P 400W PQ40/40 PS10,12,15P	1	9001	4-40X5/16 PAN PH MS ZN W/STAR WASHR	11
7830	MM3Z12VT1G 12V0 0W2 5% SMT ZEN	7	4459	_10K B LIN 9MM DET HI TORQ P32	3	9975	#4 X 1/2 PAN PHILIP TYPE A/B TBZ	7
7617	BZX84C15LT1 15V0 0W225 ZEN SOT23	2	6405	RED 3MM LED 2V1 20MA DIFFUSD	1	8822	6-32X1/4 PAN PH MS MED L/W SEMS ZN	1
8159	SMAZ18-13-F 18V0 1W0 5% SMT ZEN	1	6400	YEL 3MM LED 2V1 20MA DIFFUSD	1	8801	6-32X3/8 PAN PHIL TRILOBE TBZ	14
8185	SMBJ5371B 60V 5W0 DO214AA SMT ZEN	2	6408	GRN 3MM LED 2V2 20MA DIFFUSD	1	4088	RECEPTACLE:V-LOCK INLET	1
7987	UCC25600 RES MODE CTRL SMT SO8	2	6543	48R 265V RESETTABLE THERMISTOR PTC	1	8482	3/8 1D FLAT WASHER	1
8121	CNY17F-2S OPTO-COUPLER 6P SMT IC	3	4063	1/4IN ISO JCK PCMT VT STER RT SWT	1	8485	#6 SPLIT WASHER ZINC	3
8158	LNK306G OFFLINE SWITCH SMT SMD8B	8	3466	RCA DUAL PCB MT VERT GOLD 24MM	1	4184	DPST ROKR SW QUIK 250" AC/PWR IEC6	1
7661	LM393D DUAL COMPARATOR SMT SO-8	4	4090	1/4IN &XLR PCB MT VERT COMBO NCJ6-V	1	8483	ADAPTOR,SPEAKER STAND,METAL,BLACK	7
8124	TLV3201 SNGLE COMPARATOR SMT SOT235	7	4100	XLR MALE PCB MT VERT	2	10010	CAST HANDLE PS10P/PS12P/PS15P	5.8
7993	TL071CDR OPAMP JFET 3MHZ SO-8 SMT	4	4019	10 CIR SOCKT DIL VT 0.1	1	7393	_8R 30W 1.00" DRIVER BMS	1
7745	W125 0R 5% 0805 SMT RES	1	3696	RELAY 1C 02AMP DC24 006MA PC-S	1	8933	FLYWARE BOLT 1/4-20 W/PLASTIC CAP	6
7739	W250 1R 5% 1206 SMT RES	2	7941	__8.2UH COIL 1210 SMT	1	9000	ADAPTOR FLANGE FOR HORN	1
8183	1W00 2R0 1% 2512 SMT RES	1	2910	120.0UH COIL SR4018T 1R6 SMT	1	8206	YORKVILLE LOGO METALPHOTO	1
8012	1W00 4R7 5% 2512 SMT RES	11	7766	_15P 50V 5%CAP 0603 SMT NPO	1	8938	1/4-20X10MM INSERT NUT TYPE D	34
8131	W500 10R 5% 1210 SMT RES	24	7813	_47P 50V 5%CAP 0805 SMT NPO	6	8934	7/16-20 UNF HEX NUT GRD 5 CLEAR ZNC	6
7930	W250 22R 5% 1206 SMT RES	2	7931	270P 50V 5%CAP 0805 SMT NPO	1	PS12PCABINET	12"PS SET W/POWER BACK BLACK PLASTC	1
7670	W125 47R5 1% 0805 SMT RES	3	7871	470P 50V 5%CAP 0603 SMT NPO	5	9417SS	#8X3/4 SS PAN QUAD PLASTITE BO&W	14
4964	W125 68R1 1% 0805 SMT RES	1	7603	680P 50V 5%CAP 0805 SMT C0G	2	9421SS	#10X3/4 SS PAN QUAD PLASTITE BO&W	12
7624	W100 100R 1% 0805 SMT RES	7	7605	__1N5 50V 5%CAP 0805 SMT NPO	2	9085	1/4-20X1 1/2 PAN PHIL TRILOB TBZ	26
7635	W100 221R 1% 0805 SMT RES	3	7966	__2N7 100V 10%CAP 0805 SMT X7R	3	9404SS	1/4-20X23MM SS JOINT CONN BOLT BO	6
7671	W125 249R0 1% 0805 SMT RES	4	7694	__3N3 25V 5%CAP 0805 SMT NPO	1	9418SS	1/4-20X3/4 SS FLAT PHIL MS BO&W	4
7709	W100 301R 1% 0805 SMT RES	1	7874	_10N 50V 5%CAP 1206 SMT NPO	1	9422SS	1/4-20X1X1/4 SS CARRIAGE BOLT BO&	24
7672	W125 348R0 1% 0805 SMT RES	9	7798	_15N 50V 5%CAP 0805 SMT C0G	2	8879	M5 X 10 CHEESE PHIL MS ZINC CLEAR	2
7673	W100 475R 1% 0805 SMT RES	1	7696	_68N 50V 5%CAP 0805 SMT X7R	1	7558	12" 8R 600WPGM CER SPEAKER	1
7820	W100 499R 1% 0805 SMT RES	4	7767	100N 16V 10%CAP 0603 SMT X7R	37	8489	1/4-20 MEDIUM LOCK WASHER TBZ	2
7646	W125 681R 1% 0805 SMT RES	1	7878	1U 25V 20%CAP 1206 SMT X7R	1	8995	3/8 STEEL FLAT WASHER, BO&W	6
7621	W100 1K0 1% 0805 SMT RES	15	7819	_10U 10V 10%CAP 1206 SMT X5R	10	8492	7/16" SPLIT LOCK WASHER CLEAR ZINC	6
7675	W125 1K21 1% 0805 SMT RES	4	8140	_15U 35V 10%CAP 6032 SMT TNT	1	8817	#10 FLAT WASHER FOR 3/16 BOLT TBZ	20
7796	W063 1K37 1% 0603 SMT RES	1	8139	_22U 25V 20%CAP 1210 SMT X7R	6	8947	1.250ODX1/4ID FENDER WASHER ZINC CL	16
7649	W125 1K50 1% 0805 SMT RES	1	8141	100U 10V 20%CAP 3528 SMT TNT	1	8387	PS NEO SC41 1/16" X 0.5" X 100' ROL	40
8137	W125 1K62 1% 0805 SMT RES	6	8080	SMAJ150CA 150V 400W BIDIR SMT	11	9914	PSAMP SERIES CAST CHASSIS	1

PS15P Parts List 7/4/2018

YS #	Description	Qty.	YS #	Description	Qty.	YS #	Description	Qty.
6545	__1N 250V 20%CAP BLK 'Y' 10MM AC	4	7631	W100 2K21 1% 0805 SMT RES	1	7831	MM3Z15VT1G 15V0 0W2 5% SMT ZEN	1
5840	_22N 400V 10%CAP BLK RAD POLY FLM	2	7632	W100 2K32 1% 0805 SMT RES	4	7832	MM3Z18VT1G 18V0 0W2 5% SMT ZEN	2
5516	_47N 2000V 10%CAP AXL POLYPROP BULK	1	7633	W100 2K74 1% 0805 SMT RES	3	8318	ADAU1401 28/56 DSP 2AD4DA SMT IC	2
5827	150N 250V 20%CAP BLK 'X2' 15MM AC	1	5061	W125 2K87 1% 0805 SMT RES	1	7918	LM1117 REGULATOR 5V0 SMT SOT223	2
5972	680N 400V 5%CAP BLK RAD POLY FLM	4	7637	W125 3K32 1% 0805 SMT RES	12	7817	33078 DUAL OPAMP SMT SO-8	7
5262	1U 275V 20%CAP BLK 'X2'26.0MM AC	2	8189	W125 4K02 0.1% 0805 SMT RES	9	7906	MC9S08GT60 MICROCNTRLLER SMT QFP44	1
5665	1500U 100V 20%CAP BLK 22X35MM	8	7744	W250 4K7 5% 1206 SMT RES	2	7922	06 CIR DUAL ROW HDR VT 0.1SPC SMT	1
6845	MUR1640CTG 400V 8A DIODE DUAL CC	3	7679	W100 4K99 1% 0805 SMT RES	11	7894	12.288MHZ CRYSTAL 4-PIN SMT	1
6975	SPW35N60CFD MOSFET N-CN 600V TO-247	7	8153	W125 5K36 1% 0805 SMT RES	2	7765	W063 10R 5% 0603 SMT RES	8
6622	10R 20% THERMISTOR NTC	2	7822	W100 7K50 1% 0805 SMT RES	3	7728	W100 39R 5% 0805 SMT RES	3
3109	25UH COIL E44 FERR 14T 19AWG LITZ	1	7681	W125 8K25 1% 0805 SMT RES	2	7854	W125 47R 5% 0805 SMT RES	1
6672	__64UH CHOKE 68T20AWG/T157-2 PCBMNT	3	7710	W100 9K09 1% 0805 SMT RES	1	7624	W100 100R 1% 0805 SMT RES	2
6507	3.3MH COIL COMMON MODE 5A	2	8095	1W00 10K 5% 2512 SMT RES	21	7708	W100 200R 1% 0805 SMT RES	1
4208	10 CIR SOCKT DIL RA 0.1	1	7761	W100 12K1 1% 0603 SMT RES	1	7635	W100 221R 1% 0805 SMT RES	1
4167	2X2PIN 4.2MM RA HEADER VAL-U-LOK	1	7627	W100 13K 1% 0805 SMT RES	3	7897	W125 330R 0.5% 0805 SMT RES	4
4146	3 PIN POWER PIN HEADER MALE POLZED	1	4995	W125 14K0 1% 0805 SMT RES	1	7856	W125 470R 5% 0805 SMT RES	3
4974	W125 45K3 1% 0805 SMT RES	4	8093	1W00 15K 5% 2512 SMT RES	6	7673	W100 475R 1% 0805 SMT RES	5
3105	RELAY 1C 10AMP DC12 030MA PC-C	1	7682	W125 17K8 1% 0805 SMT RES	1	7898	W125 1K02 0.1% 0805 SMT RES	13
1668	PSAMP EMI SHIELD CASE	2	7634	W100 20K5 1% 0805 SMT RES	7	7899	W125 1K800 0.1% 0805 SMT RES	6
7941	__8.2UH COIL 1210 SMT	1	8182	W125 22K 5% 0805 SMT RES	2	7676	W100 2K0 1% 0805 SMT RES	2
8108	120UH COIL 0R4 10MMSQ SMT	5	7636	W100 27K4 1% 0805 SMT RES	1	7859	W125 2K2 5% 0805 SMT RES	1
7732	220.0UH COIL SMT	2	7900	W125 30K 0.5% 0805 SMT RES	2	7633	W100 2K74 1% 0805 SMT RES	5
7974	1000UH 10% COIL 12MM SMT	1	8094	1W00 33K 5% 2512 SMT RES	4	7860	W125 4K7 5% 0805 SMT RES	1
5980	_10P 1000V 10%CAP 1206 SMT X7R	1	8199	W125 34K0 1% 0805 SMT RES	3	7679	W100 4K99 1% 0805 SMT RES	1
8010	_33P 100V 5%CAP 0603 SMT C0G	1	4971	1W00 39K 5% 2512 SMT RES	3	7928	W125 10K00 0.1% 0805 SMT RES	20
7748	_47P 100V 5%CAP 0805 SMT NPO	9	4966	W125 40K2 1% 0805 SMT RES	3	4952	W125 10K2 1% 0805 SMT RES	1
7927	100P 50V 10%CAP 0805 SMT NPO	2	5074	W125 41K2 1% 0805 SMT RES	1	7823	W100 18K2 1% 0805 SMT RES	2
7692	150P 50V 5%CAP 0805 SMT NPO	1	8157	1W00 47K 5% 2512 SMT RES	4	7634	W100 20K5 1% 0805 SMT RES	1
8272	220P 100V 10%CAP 0805 SMT X7R	2	7824	W125 47K5 1% 0805 SMT RES	5	5066	W125 22K1 1% 0805 SMT RES	2
7931	270P 50V 5%CAP 0805 SMT NPO	1	8051	W125 68K 5% 0805 SMT RES	2	7863	W125 33K 5% 0805 SMT RES	3
7693	_1N 50V 5%CAP 0805 SMT NPO	6	8228	W125 75K 1% 0805 SMT RES	4	7864	W125 100K 5% 0805 SMT RES	1
7741	_2N2 50V 10%CAP 0805 SMT X7R	7	8160	W125 91K 5% 0805 SMT RES	6	7866	W125 1M 5% 0805 SMT RES	2
7783	_2N7 100V 10%CAP 0805 SMT C0G	1	7759	W250 100K 5% 1206 SMT RES	22	7837	MMBT5401 PNP SOT-23 SMT	2
7694	_3N3 25V 5%CAP 0805 SMT NPO	5	5000	W125 140K 1% 0805 SMT RES	1	4007	.9 LED CUSTOM SPACER	3
7799	__5N6 50V 5%CAP 0805 SMT C0G	3	7865	W125 150K 5% 0805 SMT RES	6	3522	DPDT MINI PC VERT SNP ALT	3
7737	_10N 50V 10%CAP 0805 SMT X7R	15	7630	W100 182K 1% 0805 SMT RES	2	3601	RING TERMINAL 16AWG WIRE & #8 SCREW	14
8092	100N 450V 10%CAP 1206 SMT X7T	24	7686	W100 274K 1% 0805 SMT RES	1	4177	CONNECTOR HOUSING 4 POSITION 2X2	1
7601	220N 50V 10%CAP 1206 SMT X7R	1	7639	W100 357K 1% 0805 SMT RES	2	3575	CONN PLUG 3 POS. .084" V-2 FEMALE	1
8096	470N 100V 10%CAP 1206 SMT X7R	3	4985	W125 562K 1% 0805 SMT RES	2	4175	CONNECTOR SOCKET TERMINAL 18-22AWG	6
7878	1U 25V 20%CAP 1206 SMT X7R	33	7651	W250 1M0 1% 1206 SMT RES	4	8483	ADAPTOR,SPEAKER STAND,METAL,BLACK	7
7877	__2U2 100V 20%CAP 1812 SMT X7R	15	7623	W125 1M50 1% 0805 SMT RES	1	10010	CAST HANDLE PS10P/PS12P/PS15P	7.1
7735	4U7 50V 10%CAP 1210 SMT CER	15	8165	MMBTA92 PNP SOT-23 SMT	23	7393	8R 30W 1.00" DRIVER BMS	1
8088	_10U 16V 10%CAP 0805 SMT X6S	7	7806	MMBF4391LT1 NCH JFET SOT-23 SMT T&R	4	8933	FLYWARE BOLT 1/4-20 W/PLASTIC CAP	6
7697	_22U 16V 5%CAP 5X5.5 SMT ELC	2	7884	IRS20957S DIG AUDIO DRVR SMT SOIC	4	9000	ADAPTOR FLANGE FOR HORN	1
7811	100U 25V 20%CAP 8X5.4 SMT ELE	1	8188	XF3955 GATE DRIVE XFMR SMT	2	8206	YORKVILLE LOGO METALPHOTO	1
8109	BAV21WS 200V 0A2 SOD323 SMT	43	8607	3/16X1/8X.06ID NYLON SPACER	5	8938	1/4-20X10MM INSERT NUT TYPE D	34
7965	DFLZ5V1-7 5V1 1W0 5% SMT ZEN	4	9067	1/8X5/16XID.64 NYLON SPACER	10	8934	7/16-20 UNF HEX NUT GRD 5 CLEAR ZNC	6
8076	MMSZ4690T1G 5V6 0W5 5% SMT ZEN	1	1249	XFMR O/P 400W PQ40/40 PS10,12,15P	1	PS15PCABINET	15 PS SET W/POWER BACK BLACK PLASTC	1
7996	SMAZ10-13-F 10V0 1W0 10% SMT ZEN	3	4459	_10K B LIN 9MM DET HI TORQ P32	3	9417SS	#8X3/4 SS PAN QUAD PLASTITE BO&W	14
7830	MM3Z12VT1G 12V0 0W2 5% SMT ZEN	7	6405	RED 3MM LED 2V1 20MA DIFFUSD	1	9421SS	#10X3/4 SS PAN QUAD PLASTITE BO&W	12
7617	BZX84C15LT1 15V0 0W225 ZEN SOT23	2	6400	YEL 3MM LED 2V1 20MA DIFFUSD	1	9085	1/4-20X1 1/2 PAN PHIL TRILOB TBZ	30
8159	SMAZ18-13-F 18V0 1W0 5% SMT ZEN	1	6408	GRN 3MM LED 2V2 20MA DIFFUSD	1	9404SS	1/4-20X23MM SS JOINT CONN BOLT BO	6
8185	SMBJ5371B 60V 5W0 DO214AA SMT ZEN	2	6543	48R 265V RESETTABLE THERMISTOR PTC	1	9418SS	1/4-20X3/4 SS FLAT PHIL MS BO&W	4
7987	UCC25600 RES MODE CTRL SMT SO8	2	4063	1/4IN ISO JCK PCMT VT STER RT SWT	1	9422SS	1/4-20X1X1/4 SS CARRIAGE BOLT BO&	24
8121	CNY17F-2S OPTO-COUPLER 6P SMT IC	3	3466	RCA DUAL PCB MT VERT GOLD 24MM	1	8879	M5 X 10 CHEESE PHIL MS ZINC CLEAR	2
8158	LNK306G OFFLINE SWITCH SMT SMD8B	8	4090	1/4IN &XLR PCB MT VERT COMBO NCJ6-V	1	7541	15" 8R 750WPGM SPEAKER CELESTION	1
7661	LM393D DUAL COMPARATOR SMT SO-8	4	4100	XLR MALE PCB MT VERT	2	8489	1/4-20 MEDIUM LOCK WASHER TBZ	2
8124	TLV3201 SNGLE COMPARATOR SMT SOT235	7	4019	10 CIR SOCKT DIL VT 0.1	1	8995	3/8 STEEL FLAT WASHER, BO&W	6
7993	TL071CDR OPAMP JFET 3MHZ SO-8 SMT	4	3696	RELAY 1C 02AMP DC24 006MA PC-S	1	8492	7/16" SPLIT LOCK WASHER CLEAR ZINC	6
7745	W125 0R 5% 0805 SMT RES	1	7941	__8.2UH COIL 1210 SMT	1	8817	#10 FLAT WASHER FOR 3/16 BOLT TBZ	20
7739	W250 1R 5% 1206 SMT RES	2	2910	120.0UH COIL SR4018T 1R6 SMT	1	8947	1.250ODX1/4ID FENDER WASHER ZINC CL	16
8183	1W00 2R0 1% 2512 SMT RES	1	7766	_15P 50V 5%CAP 0603 SMT NPO	1	8387	PS NEO SC41 1/16" X 0.5" X 100' ROL	42
8012	1W00 4R7 5% 2512 SMT RES	11	7813	_47P 50V 5%CAP 0805 SMT NPO	6	2491	10.00 AMP CIRCUIT BREAKER TE	1
8131	W500 10R 5% 1210 SMT RES	24	7931	270P 50V 5%CAP 0805 SMT NPO	1	4153	2POS XSISTOR TO220SPRING	6
7930	W250 22R 5% 1206 SMT RES	2	7871	470P 50V 5%CAP 0603 SMT NPO	5	3810	4" NYLON CABLE TIE	3
7670	W125 47R5 1% 0805 SMT RES	3	7603	680P 50V 5%CAP 0805 SMT C0G	2	8637	ROUND PUSH BUTTON 1/4" BLK 24MM	3
4964	W125 68R1 1% 0805 SMT RES	1	7605	__1N5 50V 5%CAP 0805 SMT NPO	2	8653C	LOW PROFILE POINTER AT 12 KNOB	3
7624	W100 100R 1% 0805 SMT RES	7	7966	__2N7 100V 10%CAP 0805 SMT X7R	3	3008	3P 18 AWG 25'AC LINE CORD	1
7635	W100 221R 1% 0805 SMT RES	3	7694	__3N3 25V 5%CAP 0805 SMT NPO	1	4212	SARCON 30GTR THERMOPAD 35X40MM	4
7671	W125 249R0 1% 0805 SMT RES	4	7874	_10N 50V 5%CAP 1206 SMT NPO	1	4139	3" 10C-28AWG RIBBON DIL SOCKETS	1
7709	W100 301R 1% 0805 SMT RES	1	7798	_15N 50V 5%CAP 0805 SMT C0G	2	9001	4-40X5/16 PAN PH MS ZN W/STAR WASHR	11
7672	W125 348R0 1% 0805 SMT RES	9	7696	_68N 50V 5%CAP 0805 SMT X7R	1	9975	#4 X 1/2 PAN PHILIP TYPE A/B TBZ	7
7673	W100 475R 1% 0805 SMT RES	1	7767	100N 16V 10%CAP 0603 SMT X7R	37	8822	6-32X1/4 PAN PH MS MED L/W SEMS ZN	1
7820	W100 499R 1% 0805 SMT RES	4	7878	1U 25V 20%CAP 1206 SMT X7R	1	8801	6-32X3/8 PAN PHIL TRILOBE TBZ	14
7646	W125 681R 1% 0805 SMT RES	1	7819	_10U 10V 10%CAP 1206 SMT X5R	10	4088	RECEPTACLE:V-LOCK INLET	1
7621	W100 1K0 1% 0805 SMT RES	15	8140	_15U 35V 10%CAP 6032 SMT TNT	1	8482	3/8 1D FLAT WASHER	1
7675	W125 1K21 1% 0805 SMT RES	4	8139	_22U 25V 20%CAP 1210 SMT X7R	6	8485	#6 SPLIT WASHER ZINC	3
7796	W063 1K37 1% 0603 SMT RES	1	8141	100U 10V 20%CAP 3528 SMT TNT	1	4184	DPST ROKR SW QUIK 250" AC/PWR IEC6	1
7649	W125 1K50 1% 0805 SMT RES	1	8080	SMAJ150CA 150V 400W BIDIR SMT	11	10046	.5"X4" VIBRATION PAD PSA FLAT SIDE	2.837
8137	W125 1K62 1% 0805 SMT RES	6	7914	MMBZ5231B 5V1 0W35 5% SMT ZEN	2	9914	PSAMP SERIES CAST CHASSIS	1

M1519 PG1 Parts Reference List 7/4/2018

REF	YS #	Description
AI-ASS	M1519-59	PS10PCE ASSY PCB
C1	7737	10N 50V 10%CAP 0805 SMT X7R
C2	7878	1U 25V 20%CAP 1206 SMT X7R
C3	8096	470N 100V 10%CAP 1206 SMT X7R
C4	7875	100N 100V 10%CAP 1206 SMT X7R
C5	7877	2U2 100V 20%CAP 1812 SMT X7R
C6	5979	100N 50V 5%CAP 0805 SMT X7R
C7	7878	1U 25V 20%CAP 1206 SMT X7R
C8	8088	10U 16V 10%CAP 0805 SMT X6S
C9	5665	1500U 100V 20%CAP BLK 22X35MM
C10	7876	2U2 200V 20%CAP 3025 SMT CER
C11	7877	2U2 100V 20%CAP 1812 SMT X7R
C12	7737	10N 50V 10%CAP 0805 SMT X7R
C13	7741	2N2 50V 10%CAP 0805 SMT X7R
C14	7741	2N2 50V 10%CAP 0805 SMT X7R
C15	5665	1500U 100V 20%CAP BLK 22X35MM
C16	7748	47P 100V 5%CAP 0805 SMT NPO
C17	8088	10U 16V 10%CAP 0805 SMT X6S
C18	7693	1N 50V 5%CAP 0805 SMT NPO
C19	8092	100N 450V 10%CAP 1206 SMT X7T
C20	7737	10N 50V 10%CAP 0805 SMT X7R
C21	5979	100N 50V 5%CAP 0805 SMT X7R
C22	7693	1N 50V 5%CAP 0805 SMT NPO
C23	5979	100N 50V 5%CAP 0805 SMT X7R
C24	7737	10N 50V 10%CAP 0805 SMT X7R
C25	8272	220P 100V 10%CAP 0805 SMT X7R
C26	7748	47P 100V 5%CAP 0805 SMT NPO
C27	7735	4U7 50V 10%CAP 1210 SMT CER
C28	7735	4U7 50V 10%CAP 1210 SMT CER
C29	8092	100N 450V 10%CAP 1206 SMT X7T
C30	7877	2U2 100V 20%CAP 1812 SMT X7R
C31	7878	1U 25V 20%CAP 1206 SMT X7R
C32	5840	22N 400V 10%CAP BLK RAD POLY FLM
C34	7694	3N3 25V 5%CAP 0805 SMT NPO
C37	7694	3N3 25V 5%CAP 0805 SMT NPO
C41	5979	100N 50V 5%CAP 0805 SMT X7R
C43	5979	100N 50V 5%CAP 0805 SMT X7R
C44	5979	100N 50V 5%CAP 0805 SMT X7R
C45	7878	1U 25V 20%CAP 1206 SMT X7R
C46	7878	1U 25V 20%CAP 1206 SMT X7R
C49	7811	100U 25V 20%CAP 8X5.4 SMT ELE
C51	5516	47N 2000V 10%CAP AXL POLYPROP BULK
C53	7735	4U7 50V 10%CAP 1210 SMT CER
C54	7735	4U7 50V 10%CAP 1210 SMT CER
C55	7877	2U2 100V 20%CAP 1812 SMT X7R
C56	7877	2U2 100V 20%CAP 1812 SMT X7R
C57	7878	1U 25V 20%CAP 1206 SMT X7R
C58	7878	1U 25V 20%CAP 1206 SMT X7R
C59	8092	100N 450V 10%CAP 1206 SMT X7T
C60	7878	1U 25V 20%CAP 1206 SMT X7R
C61	7876	2U2 200V 20%CAP 3025 SMT CER
C62	8092	100N 450V 10%CAP 1206 SMT X7T
C63	7878	1U 25V 20%CAP 1206 SMT X7R
C64	7741	2N2 50V 10%CAP 0805 SMT X7R
C65	7741	2N2 50V 10%CAP 0805 SMT X7R
C66	7748	47P 100V 5%CAP 0805 SMT NPO
C67	8088	10U 16V 10%CAP 0805 SMT X6S
C68	7741	2N2 50V 10%CAP 0805 SMT X7R
C69	7878	1U 25V 20%CAP 1206 SMT X7R
C70	7737	10N 50V 10%CAP 0805 SMT X7R
C71	7693	1N 50V 5%CAP 0805 SMT NPO
C72	7738	10U0 16V 10%CAP 1206 SMT X7R
C73	5979	100N 50V 5%CAP 0805 SMT X7R
C74	7748	47P 100V 5%CAP 0805 SMT NPO
C75	5979	100N 50V 5%CAP 0805 SMT X7R
C76	7734	1U0 50V 10%CAP 1206 SMT CER
C77	7877	2U2 100V 20%CAP 1812 SMT X7R
C78	7877	2U2 100V 20%CAP 1812 SMT X7R
C79	7737	10N 50V 10%CAP 0805 SMT X7R
C80	7878	1U 25V 20%CAP 1206 SMT X7R
C81	7741	2N2 50V 10%CAP 0805 SMT X7R
C82	7877	2U2 100V 20%CAP 1812 SMT X7R
C83	7875	100N 100V 10%CAP 1206 SMT X7R
C84	5980	10P 1000V 10%CAP 1206 SMT X7R
C85	8088	10U 16V 10%CAP 0805 SMT X6S
C86	5971	680N 250V 5% CAPBLK RAD POLY FLM
C88	5971	680N 250V 5% CAPBLK RAD POLY FLM
C89	7692	150P 50V 5%CAP 0805 SMT NPO
C90	7738	10U0 16V 10%CAP 1206 SMT X7R
C91	7878	1U 25V 20%CAP 1206 SMT X7R
C92	7697	22U 16V 5%CAP 5X5.5 SMT ELC
C93	7734	1U0 50V 10%CAP 1206 SMT CER
C94	7734	1U0 50V 10%CAP 1206 SMT CER
C95	7697	22U 16V 5%CAP 5X5.5 SMT ELC
C96	7877	2U2 100V 20%CAP 1812 SMT X7R
C97	7877	2U2 100V 20%CAP 1812 SMT X7R
C98	7741	2N2 50V 10%CAP 0805 SMT X7R
C99	7878	1U 25V 20%CAP 1206 SMT X7R
C100	7875	100N 100V 10%CAP 1206 SMT X7R
C101	7875	100N 100V 10%CAP 1206 SMT X7R
C102	7694	3N3 25V 5%CAP 0805 SMT NPO
C104	7877	2U2 100V 20%CAP 1812 SMT X7R
C105	8096	470N 100V 10%CAP 1206 SMT X7R
C106	7694	3N3 25V 5%CAP 0805 SMT NPO
C107	7737	10N 50V 10%CAP 0805 SMT X7R
C108	7735	4U7 50V 10%CAP 1210 SMT CER
C109	7735	4U7 50V 10%CAP 1210 SMT CER
C110	7737	10N 50V 10%CAP 0805 SMT X7R
C111	7927	100P 50V 10%CAP 0805 SMT NPO
C112	7735	4U7 50V 10%CAP 1210 SMT CER
C113	7927	100P 50V 10%CAP 0805 SMT NPO
C114	7693	1N 50V 5%CAP 0805 SMT NPO
C115	7735	4U7 50V 10%CAP 1210 SMT CER
C116	7693	1N 50V 5%CAP 0805 SMT NPO
C117	5979	100N 50V 5%CAP 0805 SMT X7R
C118	7737	10N 50V 10%CAP 0805 SMT X7R
C119	5665	1500U 100V 20%CAP BLK 22X35MM
C120	5665	1500U 100V 20%CAP BLK 22X35MM
C121	5665	1500U 100V 20%CAP BLK 22X35MM
C122	5665	1500U 100V 20%CAP BLK 22X35MM
C123	7735	4U7 50V 10%CAP 1210 SMT CER
C124	7735	4U7 50V 10%CAP 1210 SMT CER
C125	5840	22N 400V 10%CAP BLK RAD POLY FLM
C126	7737	10N 50V 10%CAP 0805 SMT X7R
C127	7875	100N 100V 10%CAP 1206 SMT X7R
C129	7694	3N3 25V 5%CAP 0805 SMT NPO
C130	7931	270P 50V 5%CAP 0805 SMT NPO
C131	7737	10N 50V 10%CAP 0805 SMT X7R
C132	7737	10N 50V 10%CAP 0805 SMT X7R
C133	8096	470N 100V 10%CAP 1206 SMT X7R
C134	7734	1U0 50V 10%CAP 1206 SMT CER
C135	7748	47P 100V 5%CAP 0805 SMT NPO
C136	7737	10N 50V 10%CAP 0805 SMT X7R
C137	7748	47P 100V 5%CAP 0805 SMT NPO
C138	7737	10N 50V 10%CAP 0805 SMT X7R
C139	7878	1U 25V 20%CAP 1206 SMT X7R
C140	7748	47P 100V 5%CAP 0805 SMT NPO
C141	7877	2U2 100V 20%CAP 1812 SMT X7R
C142	7799	5N6 50V 5%CAP 0805 SMT C0G
C143	7799	5N6 50V 5%CAP 0805 SMT C0G
C144	7734	1U0 50V 10%CAP 1206 SMT CER
C145	5979	100N 50V 5%CAP 0805 SMT X7R
C146	5979	100N 50V 5%CAP 0805 SMT X7R
C147	7878	1U 25V 20%CAP 1206 SMT X7R
C148	7878	1U 25V 20%CAP 1206 SMT X7R
C149	7878	1U 25V 20%CAP 1206 SMT X7R
C150	7878	1U 25V 20%CAP 1206 SMT X7R
C151	7878	1U 25V 20%CAP 1206 SMT X7R
C152	7878	1U 25V 20%CAP 1206 SMT X7R
C153	7735	4U7 50V 10%CAP 1210 SMT CER
C154	7735	4U7 50V 10%CAP 1210 SMT CER
C155	7878	1U 25V 20%CAP 1206 SMT X7R
C156	7878	1U 25V 20%CAP 1206 SMT X7R
C157	7878	1U 25V 20%CAP 1206 SMT X7R
C158	7878	1U 25V 20%CAP 1206 SMT X7R
C159	7878	1U 25V 20%CAP 1206 SMT X7R
C204	7734	1U0 50V 10%CAP 1206 SMT CER
C209	6545	1N 250V 20%CAP BLK 'Y' 10MM AC
C210	5972	680N 400V 5%CAP BLK RAD POLY FLM
C213	6545	1N 250V 20%CAP BLK 'Y' 10MM AC
C214	6545	1N 250V 20%CAP BLK 'Y' 10MM AC
C215	5666	330U 400V 20%CAP BLK 25X40MM
C216	5666	330U 400V 20%CAP BLK 25X40MM
C220	5979	100N 50V 5%CAP 0805 SMT X7R
C221	7735	4U7 50V 10%CAP 1210 SMT CER
C230	6545	1N 250V 20%CAP BLK 'Y' 10MM AC
C231	5262	1U 275V 20%CAP BLK 'X2'26.0MM AC
C232	5827	150N 250V 20%CAP BLK 'X2' 15MM AC
C233	5262	1U 275V 20%CAP BLK 'X2'26.0MM AC
C236	7734	1U0 50V 10%CAP 1206 SMT CER
C237	7601	220N 50V 10%CAP 1206 SMT X7R
C239	7737	10N 50V 10%CAP 0805 SMT X7R
C243	5979	100N 50V 5%CAP 0805 SMT X7R
C244	7738	10U0 16V 10%CAP 1206 SMT X7R
D1	8109	BAV21WS 200V 0A2 SOD323 SMT
D2	7889	ES3D 200V 3A0 D214 SMT SMC
D3	7889	ES3D 200V 3A0 D214 SMT SMC
D4	7848	MURA240T3 400V 2A DIO 403D SMT
D5	8109	BAV21WS 200V 0A2 SOD323 SMT
D6	8109	BAV21WS 200V 0A2 SOD323 SMT
D7	8109	BAV21WS 200V 0A2 SOD323 SMT
D8	7830	MM3Z12VT1G 12V0 0W2 5% SMT ZEN
D9	7914	MMBZ5231B 5V1 0W35 5% SMT ZEN
D10	7830	MM3Z12VT1G 12V0 0W2 5% SMT ZEN
D14	7830	MM3Z12VT1G 12V0 0W2 5% SMT ZEN
D17	7830	MM3Z12VT1G 12V0 0W2 5% SMT ZEN
D18	8076	MMSZ4690T1G 5V6 0W5 5% SMT ZEN
D19	7830	MM3Z12VT1G 12V0 0W2 5% SMT ZEN
D20	7889	ES3D 200V 3A0 D214 SMT SMC
D21	7889	ES3D 200V 3A0 D214 SMT SMC
D22	7848	MURA240T3 400V 2A DIO 403D SMT
D23	7830	MM3Z12VT1G 12V0 0W2 5% SMT ZEN
D24	8109	BAV21WS 200V 0A2 SOD323 SMT
D25	8109	BAV21WS 200V 0A2 SOD323 SMT
D26	8185	SMBJ5371B 60V 5W0 DO214AA SMT ZEN
D27	8109	BAV21WS 200V 0A2 SOD323 SMT
D28	8109	BAV21WS 200V 0A2 SOD323 SMT
D29	7996	SMAZ10-13-F 10V0 1W0 10% SMT ZEN
D30	7996	SMAZ10-13-F 10V0 1W0 10% SMT ZEN
D31	8185	SMBJ5371B 60V 5W0 DO214AA SMT ZEN
D32	8109	BAV21WS 200V 0A2 SOD323 SMT
D34	8109	BAV21WS 200V 0A2 SOD323 SMT
D35	7965	DFLZ5V1-7 5V1 1W0 5% SMT ZEN
D36	8085	ES1H 500V 1A0 D214 UPGT 8814
D37	7996	SMAZ10-13-F 10V0 1W0 10% SMT ZEN
D39	7848	MURA240T3 400V 2A DIO 403D SMT
D40	8109	BAV21WS 200V 0A2 SOD323 SMT
D41	8109	BAV21WS 200V 0A2 SOD323 SMT
D43	7914	MMBZ5231B 5V1 0W35 5% SMT ZEN
D44	7750	CDSF4148 75V 0A15 1005 SMT
D45	7830	MM3Z12VT1G 12V0 0W2 5% SMT ZEN
D46	7914	MMBZ5231B 5V1 0W35 5% SMT ZEN
D47	6649	CDBF0130L 30V 1A SCH SOD323F SMT
D48	7973	BAS316 100V 0A25 DIODE SOD323 SMT
D50	7750	CDSF4148 75V 0A15 1005 SMT
D51	7750	CDSF4148 75V 0A15 1005 SMT
D52	8109	BAV21WS 200V 0A2 SOD323 SMT
D53	7750	CDSF4148 75V 0A15 1005 SMT
D54	8109	BAV21WS 200V 0A2 SOD323 SMT
D55	7750	CDSF4148 75V 0A15 1005 SMT
D57	6649	CDBF0130L 30V 1A SCH SOD323F SMT
D58	6649	CDBF0130L 30V 1A SCH SOD323F SMT
D59	6649	CDBF0130L 30V 1A SCH SOD323F SMT
D60	7617	BZX84C15LT1 15V0 0W225 ZEN SOT23
D61	7617	BZX84C15LT1 15V0 0W225 ZEN SOT23
D62	7750	CDSF4148 75V 0A15 1005 SMT
D201	6772	BRIDGE 25A 400V WIRE LEAD SIP
D203	6845	MUR1640CTG 400V 8A DIODE DUAL CC
D206	7848	MURA240T3 400V 2A DIO 403D SMT
D207	7848	MURA240T3 400V 2A DIO 403D SMT
D220	6843	MUR1620CTRG 200V 16A DIODE DUAL CA
HW1	9067	1/8X5/16XID.64 NYLON SPACER
HW2	9067	1/8X5/16XID.64 NYLON SPACER
HW3	9067	1/8X5/16XID.64 NYLON SPACER
HW4	9067	1/8X5/16XID.64 NYLON SPACER
HW5	9067	1/8X5/16XID.64 NYLON SPACER
HW6	9067	1/8X5/16XID.64 NYLON SPACER
HW7	9067	1/8X5/16XID.64 NYLON SPACER
HW8	9067	1/8X5/16XID.64 NYLON SPACER
HW11	8607	3/16X1/8X.06ID NYLON SPACER
HW12	8607	3/16X1/8X.06ID NYLON SPACER
HW13	8607	3/16X1/8X.06ID NYLON SPACER
HW14	8607	3/16X1/8X.06ID NYLON SPACER
HW15	8607	3/16X1/8X.06ID NYLON SPACER
K1	3105	RELAY 1C 10AMP DC12 030MA PC-C
L1	7732	220.0UH COIL SMT
L2	2910	120.0UH COIL SR4018T 1R6 SMT
L3	6672	64UH CHOKE 68T20AWG/T157-2 PCBMNT
L4	2910	120.0UH COIL SR4018T 1R6 SMT
L5	6672	64UH CHOKE 68T20AWG/T157-2 PCBMNT
L7	8108	120UH COIL 0R4 10MMSQ SMT
L8	7941	8.2UH COIL 1210 SMT
L9	6507	3.3MH COIL COMMON MODE 5A
L10	6507	3.3MH COIL COMMON MODE 5A
L11	2910	120.0UH COIL SR4018T 1R6 SMT
L12	7732	220.0UH COIL SMT
L13	2910	120.0UH COIL SR4018T 1R6 SMT
L204	3109	25UH COIL E44 FERR 14T 19AWG LITZ
L219	7974	1000UH 10% COIL 12MM SMT
Q1	6972	IRFB4227PBF TO220 NCH MFET TM
Q2	6763	IRFI4020H-117P MFET HLFBRDG TO220-5
Q3	6972	IRFB4227PBF TO220 NCH MFET TM
Q4	7720	TL431A 3 TERM ADJ VREG SMT SOT-23
Q5	7837	MMBT5401 PNP SOT-23 SMT
Q8	7665	MMBT4401 NPN SOT-23 SMT
Q9	7806	MMBF4391LT1 NCH JFET SOT-23 SMT T&R
Q10	8107	FOD814A OPTO-COUPLER 4P SMT IC
Q11	6977	FDT3612 NCH MFET SOT-223 SMT
Q12	8165	MMBTA92 PNP SOT-23 SMT
Q13	7806	MMBF4391LT1 NCH JFET SOT-23 SMT T&R
Q16	7701	MMBTA14 NPN DARL SOT-23 SMT
Q17	7837	MMBT5401 PNP SOT-23 SMT
Q18	7665	MMBT4401 NPN SOT-23 SMT
Q19	8022	MMBTA64LT1G PNP DARL SOT-23 SMT
Q20	7701	MMBTA14 NPN DARL SOT-23 SMT
Q21	7665	MMBT4401 NPN SOT-23 SMT
Q22	7837	MMBT5401 PNP SOT-23 SMT
Q23	8022	MMBTA64LT1G PNP DARL SOT-23 SMT
Q24	7701	MMBTA14 NPN DARL SOT-23 SMT
Q25	7665	MMBT4401 NPN SOT-23 SMT
Q26	7837	MMBT5401 PNP SOT-23 SMT
Q27	8022	MMBTA64LT1G PNP DARL SOT-23 SMT
Q28	7665	MMBT4401 NPN SOT-23 SMT
Q29	7701	MMBTA14 NPN DARL SOT-23 SMT
Q30	7844	MJD243T4G NPN DPAK3 SMT TS
Q31	7845	MJD253T4G PNP DPAK3 SMT TS
Q32	7806	MMBF4391LT1 NCH JFET SOT-23 SMT T&R
Q33	7806	MMBF4391LT1 NCH JFET SOT-23 SMT T&R
Q34	7837	MMBT5401 PNP SOT-23 SMT
Q35	7665	MMBT4401 NPN SOT-23 SMT
Q206	6975	SPW35N60CFD MOSFET N-CN 600V TO-247
Q207	6975	SPW35N60CFD MOSFET N-CN 600V TO-247
R1	7679	W100 4K99 1% 0805 SMT RES
R2	7621	W100 1K0 1% 0805 SMT RES
R4	4985	W125 562K 1% 0805 SMT RES
R5	7621	W100 1K0 1% 0805 SMT RES
R6	7998	W750 0R 1% 2010 SMT JMP
R7	8094	1W00 33K 5% 2512 SMT RES
R8	8157	1W00 47K 5% 2512 SMT RES
R9	8095	1W00 10K 5% 2512 SMT RES
R10	8012	1W00 4R7 5% 2512 SMT RES
R11	7686	W100 274K 1% 0805 SMT RES
R12	7739	W250 1R 5% 1206 SMT RES
R13	7852	W250 10R 5% 1206 SMT RES
R14	8012	1W00 4R7 5% 2512 SMT RES
R15	8012	1W00 4R7 5% 2512 SMT RES
R16	7928	W125 10K00 0.1% 0805 SMT RES
R17	7634	W100 20K5 1% 0805 SMT RES
R18	7672	W125 348R0 1% 0805 SMT RES
R19	7627	W100 13K 1% 0805 SMT RES
R20	4974	W125 45K3 1% 0805 SMT RES
R21	8093	1W00 15K 5% 2512 SMT RES
R22	8153	W125 5K36 1% 0805 SMT RES
R23	7621	W100 1K0 1% 0805 SMT RES
R24	7621	W100 1K0 1% 0805 SMT RES
R26	4964	W125 68R1 1% 0805 SMT RES
R27	7624	W100 100R 1% 0805 SMT RES
R29	7852	W250 10R 5% 1206 SMT RES
R30	8012	1W00 4R7 5% 2512 SMT RES
R31	7625	W100 10K0 1% 0805 SMT RES
R32	7632	W100 2K32 1% 0805 SMT RES
R33	7621	W100 1K0 1% 0805 SMT RES
R34	7637	W125 3K32 1% 0805 SMT RES
R35	7637	W125 3K32 1% 0805 SMT RES
R36	7637	W125 3K32 1% 0805 SMT RES
R37	7928	W125 10K00 0.1% 0805 SMT RES
R48	7671	W125 249R0 1% 0805 SMT RES
R49	7679	W100 4K99 1% 0805 SMT RES
R50	7679	W100 4K99 1% 0805 SMT RES
R52	7670	W125 47R5 1% 0805 SMT RES
R53	8131	W500 10R 5% 1210 SMT RES
R54	7824	W125 47K5 1% 0805 SMT RES
R57	8131	W500 10R 5% 1210 SMT RES
R58	7679	W100 4K99 1% 0805 SMT RES
R59	7928	W125 10K00 0.1% 0805 SMT RES
R60	8094	1W00 33K 5% 2512 SMT RES
R61	4615	W250 4R7 5% 1206 SMT RES
R62	7930	W250 22R 5% 1206 SMT RES
R63	7930	W250 22R 5% 1206 SMT RES
R64	7679	W100 4K99 1% 0805 SMT RES
R65	7709	W100 301R 1% 0805 SMT RES
R66	7627	W100 13K 1% 0805 SMT RES
R67	7900	W125 30K 0.5% 0805 SMT RES
R68	8093	1W00 15K 5% 2512 SMT RES
R69	7928	W125 10K00 0.1% 0805 SMT RES
R70	7671	W125 249R0 1% 0805 SMT RES
R71	7621	W100 1K0 1% 0805 SMT RES
R72	4971	1W00 39K 5% 2512 SMT RES
R73	8094	1W00 33K 5% 2512 SMT RES
R74	7670	W125 47R5 1% 0805 SMT RES
R75	7651	W250 1M0 1% 1206 SMT RES
R76	8160	W125 91K 5% 0805 SMT RES
R77	7852	W250 10R 5% 1206 SMT RES
R78	8012	1W00 4R7 5% 2512 SMT RES
R79	7822	W100 7K50 1% 0805 SMT RES
R80	7621	W100 1K0 1% 0805 SMT RES
R82	7679	W100 4K99 1% 0805 SMT RES
R83	7928	W125 10K00 0.1% 0805 SMT RES
R84	7679	W100 4K99 1% 0805 SMT RES
R85	7675	W125 1K21 1% 0805 SMT RES
R86	7675	W125 1K21 1% 0805 SMT RES
R87	7630	W100 182K 1% 0805 SMT RES
R89	7998	W750 0R 1% 2010 SMT JMP
R90	7628	W100 15K0 1% 0805 SMT RES
R91	7821	W125 10R0 1% 0805 SMT RES
R92	7744	W250 4K7 5% 1206 SMT RES
R93	8137	W125 1K62 1% 0805 SMT RES
R94	7761	W100 12K1 1% 0603 SMT RES
R95	7679	W100 4K99 1% 0805 SMT RES
R97	7679	W100 4K99 1% 0805 SMT RES
R98	7928	W125 10K00 0.1% 0805 SMT RES
R99	7928	W125 10K00 0.1% 0805 SMT RES
R100	7679	W100 4K99 1% 0805 SMT RES
R101	8137	W125 1K62 1% 0805 SMT RES
R102	8137	W125 1K62 1% 0805 SMT RES
R105	7672	W125 348R0 1% 0805 SMT RES
R106	7633	W100 2K74 1% 0805 SMT RES
R109	7637	W125 3K32 1% 0805 SMT RES
R110	7637	W125 3K32 1% 0805 SMT RES
R113	7637	W125 3K32 1% 0805 SMT RES
R114	8189	W125 4K02 0.1% 0805 SMT RES
R115	7649	W125 1K50 1% 0805 SMT RES
R118	8183	1W00 2R0 1% 2512 SMT RES
R120	7852	W250 10R 5% 1206 SMT RES
R121	7824	W125 47K5 1% 0805 SMT RES
R122	7865	W125 150K 5% 0805 SMT RES
R123	7824	W125 47K5 1% 0805 SMT RES
R124	8008	W250 10K 5% ANTISURGE 0805 SMT RES
R125	8008	W250 10K 5% ANTISURGE 0805 SMT RES
R126	7632	W100 2K32 1% 0805 SMT RES
R127	7621	W100 1K0 1% 0805 SMT RES
R128	7621	W100 1K0 1% 0805 SMT RES
R129	7632	W100 2K32 1% 0805 SMT RES
R130	7824	W125 47K5 1% 0805 SMT RES
R131	8160	W125 91K 5% 0805 SMT RES
R132	7622	W100 1M0 1% 0805 SMT RES
R133	4971	1W00 39K 5% 2512 SMT RES
R135	7637	W125 3K32 1% 0805 SMT RES
R136	7639	W100 357K 1% 0805 SMT RES
R137	7672	W125 348R0 1% 0805 SMT RES
R138	7621	W100 1K0 1% 0805 SMT RES
R139	7744	W250 4K7 5% 1206 SMT RES
R140	7727	W100 4R7 5% 0805 SMT RES
R141	7821	W125 10R0 1% 0805 SMT RES
R142	7672	W125 348R0 1% 0805 SMT RES
R143	7672	W125 348R0 1% 0805 SMT RES
R144	7821	W125 10R0 1% 0805 SMT RES
R145	4985	W125 562K 1% 0805 SMT RES
R146	8051	W125 68K 5% 0805 SMT RES

M1519 PG2 Parts Reference List 7/4/2018

REF	YS #	Description
R147	7621	W100 1K0 1% 0805 SMT RES
R148	8153	W125 5K36 1% 0805 SMT RES
R149	8131	W500 10R 5% 1210 SMT RES
R150	8131	W500 10R 5% 1210 SMT RES
R151	7626	W100 100K0 1% 0805 SMT RES
R152	7624	W100 100R 1% 0805 SMT RES
R153	7820	W100 499R 1% 0805 SMT RES
R154	7820	W100 499R 1% 0805 SMT RES
R155	7621	W100 1K0 1% 0805 SMT RES
R156	7621	W100 1K0 1% 0805 SMT RES
R157	7637	W125 3K32 1% 0805 SMT RES
R158	7745	W125 0R 5% 0805 SMT RES
R159	7675	W125 1K21 1% 0805 SMT RES
R160	7626	W100 100K0 1% 0805 SMT RES
R161	8095	1W00 10K 5% 2512 SMT RES
R162	7852	W250 10R 5% 1206 SMT RES
R163	7624	W100 100R 1% 0805 SMT RES
R164	7739	W250 1R 5% 1206 SMT RES
R165	7628	W100 15K0 1% 0805 SMT RES
R166	8137	W125 1K62 1% 0805 SMT RES
R167	7634	W100 20K5 1% 0805 SMT RES
R168	7624	W100 100R 1% 0805 SMT RES
R169	7637	W125 3K32 1% 0805 SMT RES
R171	4995	W125 14K0 1% 0805 SMT RES
R172	7852	W250 10R 5% 1206 SMT RES
R173	7821	W125 10R0 1% 0805 SMT RES
R174	7672	W125 348R0 1% 0805 SMT RES
R175	8160	W125 91K 5% 0805 SMT RES
R176	7759	W250 100K 5% 1206 SMT RES
R177	7759	W250 100K 5% 1206 SMT RES
R178	8160	W125 91K 5% 0805 SMT RES
R179	7821	W125 10R0 1% 0805 SMT RES
R180	7821	W125 10R0 1% 0805 SMT RES
R181	7672	W125 348R0 1% 0805 SMT RES
R182	7821	W125 10R0 1% 0805 SMT RES
R183	8160	W125 91K 5% 0805 SMT RES
R184	8160	W125 91K 5% 0805 SMT RES
R185	7821	W125 10R0 1% 0805 SMT RES
R186	7821	W125 10R0 1% 0805 SMT RES
R187	7821	W125 10R0 1% 0805 SMT RES
R188	7821	W125 10R0 1% 0805 SMT RES
R189	7672	W125 348R0 1% 0805 SMT RES
R190	8137	W125 1K62 1% 0805 SMT RES
R191	8137	W125 1K62 1% 0805 SMT RES
R192	7759	W250 100K 5% 1206 SMT RES
R193	7759	W250 100K 5% 1206 SMT RES
R194	7759	W250 100K 5% 1206 SMT RES
R195	7759	W250 100K 5% 1206 SMT RES
R200	7900	W125 30K 0.5% 0805 SMT RES
R201	4966	W125 40K2 1% 0805 SMT RES
R202	7626	W100 100K0 1% 0805 SMT RES
R203	7630	W100 182K 1% 0805 SMT RES
R204	7625	W100 10K0 1% 0805 SMT RES
R205	7621	W100 1K0 1% 0805 SMT RES
R206	7634	W100 20K5 1% 0805 SMT RES
R207	7928	W125 10K00 0.1% 0805 SMT RES
R208	7670	W125 47R5 1% 0805 SMT RES
R209	7634	W100 20K5 1% 0805 SMT RES
R210	8051	W125 68K 5% 0805 SMT RES
R211	7928	W125 10K00 0.1% 0805 SMT RES
R212	4966	W125 40K2 1% 0805 SMT RES
R213	7822	W100 7K50 1% 0805 SMT RES
R214	7623	W125 1M50 1% 0805 SMT RES
R215	7635	W100 221R 1% 0805 SMT RES
R216	6622	10R 20% THERMISTOR NTC
R217	8008	W250 10K 5% ANTISURGE 0805 SMT RES
R218	7634	W100 20K5 1% 0805 SMT RES
R219	7621	W100 1K0 1% 0805 SMT RES
R220	8182	W125 22K 5% 0805 SMT RES
R222	7822	W100 7K50 1% 0805 SMT RES
R223	7622	W100 1M0 1% 0805 SMT RES
R224	7635	W100 221R 1% 0805 SMT RES
R225	7865	W125 150K 5% 0805 SMT RES
R226	8189	W125 4K02 0.1% 0805 SMT RES
R227	8228	W125 75K 1% 0805 SMT RES
R228	7865	W125 150K 5% 0805 SMT RES
R229	7681	W125 8K25 1% 0805 SMT RES
R230	8189	W125 4K02 0.1% 0805 SMT RES
R231	7634	W100 20K5 1% 0805 SMT RES
R232	5074	W125 41K2 1% 0805 SMT RES
R233	7626	W100 100K0 1% 0805 SMT RES
R234	7626	W100 100K0 1% 0805 SMT RES
R235	7865	W125 150K 5% 0805 SMT RES
R236	8189	W125 4K02 0.1% 0805 SMT RES
R237	8228	W125 75K 1% 0805 SMT RES
R238	7634	W100 20K5 1% 0805 SMT RES
R239	7681	W125 8K25 1% 0805 SMT RES
R240	7682	W125 17K8 1% 0805 SMT RES
R241	7796	W063 1K37 1% 0603 SMT RES
R242	7673	W100 475R 1% 0805 SMT RES
R243	7865	W125 150K 5% 0805 SMT RES
R244	8189	W125 4K02 0.1% 0805 SMT RES
R245	7626	W100 100K0 1% 0805 SMT RES
R246	4966	W125 40K2 1% 0805 SMT RES
R247	5000	W125 140K 1% 0805 SMT RES
R248	7646	W125 681R 1% 0805 SMT RES
R249	7622	W100 1M0 1% 0805 SMT RES
R250	7629	W125 150K0 1% 0805 SMT RES
R251	7820	W100 499R 1% 0805 SMT RES
R252	7820	W100 499R 1% 0805 SMT RES
R253	7626	W100 100K0 1% 0805 SMT RES
R254	7626	W100 100K0 1% 0805 SMT RES
R255	8182	W125 22K 5% 0805 SMT RES
R256	8199	W125 34K0 1% 0805 SMT RES
R257	8228	W125 75K 1% 0805 SMT RES
R258	8199	W125 34K0 1% 0805 SMT RES
R259	8228	W125 75K 1% 0805 SMT RES
R260	7628	W100 15K0 1% 0805 SMT RES
R262	4974	W125 45K3 1% 0805 SMT RES
R263	7852	W250 10R 5% 1206 SMT RES
R265	7759	W250 100K 5% 1206 SMT RES
R266	7759	W250 100K 5% 1206 SMT RES
R267	7626	W100 100K0 1% 0805 SMT RES
R268	7626	W100 100K0 1% 0805 SMT RES
R269	8189	W125 4K02 0.1% 0805 SMT RES
R270	5061	W125 2K87 1% 0805 SMT RES
R271	7679	W100 4K99 1% 0805 SMT RES
R272	6619	_10K 5% THERMISTOR VISH NTC
R273	8189	W125 4K02 0.1% 0805 SMT RES
R274	8189	W125 4K02 0.1% 0805 SMT RES
R275	8321	W125 8K66 1% 0805 SMT RES
R276	8189	W125 4K02 0.1% 0805 SMT RES
R277	7852	W250 10R 5% 1206 SMT RES
R278	7626	W100 100K0 1% 0805 SMT RES
R279	7626	W100 100K0 1% 0805 SMT RES
R280	7639	W100 357K 1% 0805 SMT RES
R281	7624	W100 100R 1% 0805 SMT RES
R282	7672	W125 348R0 1% 0805 SMT RES
R283	8008	W250 10K 5% ANTISURGE 0805 SMT RES
R284	8157	1W00 47K 5% 2512 SMT RES
R285	8157	1W00 47K 5% 2512 SMT RES
R288	7636	W100 27K4 1% 0805 SMT RES
R292	7759	W250 100K 5% 1206 SMT RES
R293	7759	W250 100K 5% 1206 SMT RES
SHLD1	1667	PSAMP TRANSISTOR SHIELD PAD
SHLD2	1668	PSAMP EMI SHIELD CASE
T1	1249	XFMR O/P 400W PQ40/40 PS10,12,15P
T2	8188	XF3955 GATE DRIVE XFMR SMT
T3	8188	XF3955 GATE DRIVE XFMR SMT
TP1	8002	TEST POINT MINIATURE SMT
TP2	8002	TEST POINT MINIATURE SMT
TP3	8002	TEST POINT MINIATURE SMT
TP4	8002	TEST POINT MINIATURE SMT
TP5	8002	TEST POINT MINIATURE SMT
TP7	8002	TEST POINT MINIATURE SMT
TP8	8002	TEST POINT MINIATURE SMT
TP9	8002	TEST POINT MINIATURE SMT
TP10	8002	TEST POINT MINIATURE SMT
TP11	8002	TEST POINT MINIATURE SMT
TP12	8002	TEST POINT MINIATURE SMT
TP13	8002	TEST POINT MINIATURE SMT
TP14	8002	TEST POINT MINIATURE SMT
TP15	8002	TEST POINT MINIATURE SMT
TP16	8002	TEST POINT MINIATURE SMT
TP17	8002	TEST POINT MINIATURE SMT
TP18	8002	TEST POINT MINIATURE SMT
TP19	8002	TEST POINT MINIATURE SMT
TP21	8002	TEST POINT MINIATURE SMT
U1	7949	ZXGD3002E6 GATE DRVR 9A SMT SOT326
U2	6666	LM5008A 100V REG 0A35 BUCK SW SMT
U3	7949	ZXGD3002E6 GATE DRVR 9A SMT SOT326
U5	7884	IRS20957S DIG AUDIO DRVR SMT SOIC
U6	8107	FOD814A OPTO-COUPLER 4P SMT IC
U10	6767	AD825 HS OPAMP JFET SO-8 SMT
U11	8121	CNY17F-2S OPTO-COUPLER 6P SMT IC
U12	7668	MC33079D QUAD OPAMP SMT SO14
U13	7668	MC33079D QUAD OPAMP SMT SO14
U14	7884	IRS20957S DIG AUDIO DRVR SMT SOIC
U16	8124	TLV3201 SNGLE COMPARATOR SMT SOT235
U17	7993	TL071CDR OPAMP JFET 3MHZ SO-8 SMT
U18	7812	SN74AHC1G86 SINGLE XOR SMT SOT235
U19	6652	MIC4424YM DUAL MOSFET DRVR SMT S08
U20	6652	MIC4424YM DUAL MOSFET DRVR SMT S08
U21	6666	LM5008A 100V REG 0A35 BUCK SW SMT
U22	6652	MIC4424YM DUAL MOSFET DRVR SMT S08
U23	6651	LM5020-2 CURR MOD PWM SMT IC SSOP10
U24	7659	LM339M QUAD SS COMP SMT SO-14
U25	7661	LM393D DUAL COMPARATOR SMT SO-8
U26	7661	LM393D DUAL COMPARATOR SMT SO-8
U27	7661	LM393D DUAL COMPARATOR SMT SO-8
U202	8158	LNK306G OFFLINE SWITCH SMT SMD8B
U205	7987	UCC25600 RES MODE CTRL SMT SO8
W1	4208	10 CIR SOCKT DIL RA 0.1
W2	4167	2X2PIN 4.2MM RA HEADER VAL-U-LOK
W201	4146	3 PIN POWER PIN HEADER MALE POLZED
ZD3	7973	BAS316 100V 0A25 DIODE SOD323 SMT
ZD201	8159	SMAZ18-13-F 18V0 1W0 5% SMT ZEN

M1520-pg1 Parts Reference List 5/18/2016

REF	YS #	Description
C1		_10N 50V 10%CAP 0805 SMT X7R
C2		__1U 25V 20%CAP 1206 SMT X7R
C3		470N 100V 10%CAP 1206 SMT X7R
C4		100N 100V 10%CAP 1206 SMT X7R
C5		470N 100V 10%CAP 1206 SMT X7R
C6		100N 50V 5%CAP 0805 SMT X7R
C7		__1U 25V 20%CAP 1206 SMT X7R
C8		_10U 16V 10%CAP 0805 SMT X6
C9	5910	4700U 100V 10%CAP BLK 35X40MM 4PS
C10		__2U2 200V 20%CAP 3025 SMT CER
C11		__2U2 100V 20%CAP 1812 SMT X7R
C12		100P 50V 10%CAP 0805 SMT NPO
C13		__2N2 50V 10%CAP 0805 SMT X7R
C14		__2N2 50V 10%CAP 0805 SMT X7R
C15	5910	4700U 100V 10%CAP BLK 35X40MM 4PS
C16		_47P 100V 5%CAP 0805 SMT NPO
C17		_10U 16V 10%CAP 0805 SMT X6
C18		__1N5 50V 5%CAP 0805 SMT NPO
C19		100N 450V 10%CAP 1206 SMT X7T
C20		_10N 50V 10%CAP 0805 SMT X7R
C21		100N 50V 5%CAP 0805 SMT X7R
C22		__1N5 50V 5%CAP 0805 SMT NPO
C23		100N 50V 5%CAP 0805 SMT X7R
C24		_10N 50V 10%CAP 0805 SMT X7R
C25		_10U0 16V 10%CAP 1206 SMT X7R
C26		_47P 100V 5%CAP 0805 SMT NPO
C27		__1U0 50V 10%CAP 1206 SMT CER
C28		__1U0 50V 10%CAP 1206 SMT CER
C29		100N 450V 10%CAP 1206 SMT X7T
C30		__2U2 100V 20%CAP 1812 SMT X7R
C31		__1U0 50V 10%CAP 1206 SMT CER
C32		__1U0 50V 10%CAP 1206 SMT CER
C33		__1U 25V 20%CAP 1206 SMT X7R
C34		100N 50V 5%CAP 0805 SMT X7R
C35		100N 450V 10%CAP 1206 SMT X7T
C36		__2U2 200V 20%CAP 3025 SMT CER
C37		__3N3 25V 5%CAP 0805 SMT NPO
C38		100N 100V 10%CAP 1206 SMT X7R
C39		100P 50V 10%CAP 0805 SMT NPO
C40		__2N2 50V 10%CAP 0805 SMT X7R
C41		__2N2 50V 10%CAP 0805 SMT X7R
C42		_47P 100V 5%CAP 0805 SMT NPO
C43		_10U 16V 10%CAP 0805 SMT X6
C44		_10N 50V 10%CAP 0805 SMT X7R
C45		100N 50V 5%CAP 0805 SMT X7R
C46		100N 100V 10%CAP 1206 SMT X7R
C47		_10U0 16V 10%CAP 1206 SMT X7R
C48		_47P 100V 5%CAP 0805 SMT NPO
C49		_22P 50V 5%CAP 0805 SMT NPO
C50		_22P 50V 5%CAP 0805 SMT NPO
C51	5516	_47N 2000V 10%CAP AXL POLYPROP BULK
C52		100U 25V 20%CAP 8X5.4 SMT ELE
C53		__1U0 50V 10%CAP 1206 SMT CER
C54		__1U0 50V 10%CAP 1206 SMT CER
C55		__2U2 100V 20%CAP 1812 SMT X7R
C56		__2U2 100V 20%CAP 1812 SMT X7R
C57		__1U 25V 20%CAP 1206 SMT X7R
C58		100N 50V 5%CAP 0805 SMT X7R
C59		100N 450V 10%CAP 1206 SMT X7T
C60		100N 100V 10%CAP 1206 SMT X7R
C61		__2U2 200V 20%CAP 3025 SMT CER
C62		100N 100V 10%CAP 1206 SMT X7R
C63		100P 50V 10%CAP 0805 SMT NPO
C64		__2N2 50V 10%CAP 0805 SMT X7R
C65		__2N2 50V 10%CAP 0805 SMT X7R
C66		_47P 100V 5%CAP 0805 SMT NPO
C67		_10U 16V 10%CAP 0805 SMT X6
C68		__2N2 50V 10%CAP 0805 SMT X7R
C69		100N 50V 5%CAP 0805 SMT X7R
C70		_15N 50V 5%CAP 0805 SMT C0G
C71		_10U0 16V 10%CAP 1206 SMT X7R
C72		_22U 20V 10%CAP 3528 SMT TANT
C73		100N 50V 5%CAP 0805 SMT X7R
C74		_47P 100V 5%CAP 0805 SMT NPO
C75		__1U0 50V 10%CAP 1206 SMT CER
C76		__1U0 50V 10%CAP 1206 SMT CER
C77		__2U2 200V 20%CAP 3025 SMT CER
C78		__2U2 100V 20%CAP 1812 SMT X7R
C79		_15N 50V 5%CAP 0805 SMT C0G
C80		_47P 100V 5%CAP 0805 SMT NPO
C81		__2N2 50V 10%CAP 0805 SMT X7R
C82		100N 50V 5%CAP 0805 SMT X7R
C83		__1U0 50V 10%CAP 1206 SMT CER
C84		__1U0 50V 10%CAP 1206 SMT CER
C85		_10U 16V 10%CAP 0805 SMT X6
C86	5971	680N 250V 5% CAPBLK RAD POLY FLM
C87	5971	680N 250V 5% CAPBLK RAD POLY FLM
C88	5971	680N 250V 5% CAPBLK RAD POLY FLM
C89		150P 50V 5%CAP 0805 SMT NPO
C90		150P 50V 5%CAP 0805 SMT NPO
C91		_10U 10V 20%CAP 0805 SMT Y5V
C92		_10U 16V 10%CAP 0805 SMT X6
C93		__1U0 50V 10%CAP 1206 SMT CER
C94		__1U0 50V 10%CAP 1206 SMT CER
C95		__1N 50V 5%CAP 0805 SMT NPO
C96		__1N 50V 5%CAP 0805 SMT NPO
C97		150P 100V 5%CAP 0805 SMTNPO
C98		__2N2 50V 10%CAP 0805 SMT X7R
C99		__1U 25V 20%CAP 1206 SMT X7R
C100		100N 100V 10%CAP 1206 SMT X7R
C101		100N 100V 10%CAP 1206 SMT X7R
C102		100N 100V 10%CAP 1206 SMT X7R
C103		_22U 20V 10%CAP 3528 SMT TANT
C104		__4U7 50V 10%CAP 1210 SMT CER
C105		_10N 50V 10%CAP 0805 SMT X7R
C106		__3N3 25V 5%CAP 0805 SMT NPO
C107		_10N 50V 10%CAP 0805 SMT X7R
C109		__4U7 50V 10%CAP 1210 SMT CER
C110		_10N 50V 10%CAP 0805 SMT X7R
C111		__4U7 50V 10%CAP 1210 SMT CER
C112		__4U7 50V 10%CAP 1210 SMT CER
C113		__4U7 50V 10%CAP 1210 SMT CER
C114		__4U7 50V 10%CAP 1210 SMT CER
C115		__4U7 50V 10%CAP 1210 SMT CER
C116		__2N2 50V 10%CAP 0805 SMT X7R
C117		__2N2 50V 10%CAP 0805 SMT X7R
C118		_10U 16V 10%CAP 0805 SMT X6
C201		220N 50V 10%CAP 1206 SMT X7R
C202		_22U 20V 10%CAP 3528 SMT TANT
C204		__1U0 50V 10%CAP 1206 SMT CER
C205		_82N 100V 10%CAP 0805 SMT X7R
C206		_82N 100V 10%CAP 0805 SMT X7R
C207	5635	1000U 35V 20%CAP BLK RADIAL ELECT
C208	5635	1000U 35V 20%CAP BLK RADIAL ELECT
C209	6545	__1N 250V 20%CAP BLK 'Y' 10MM AC
C210	5972	680N 400V 5%CAP BLK RAD POLY FLM
C211		220N 50V 10%CAP 1206 SMT X7R
C212		_82N 100V 10%CAP 0805 SMT X7R
C213	6545	__1N 250V 20%CAP BLK 'Y' 10MM AC
C214	6545	__1N 250V 20%CAP BLK 'Y' 10MM AC
C215	5663	1200U 200V 20%CAP BLK 25X40MM
C216	5663	1200U 200V 20%CAP BLK 25X40MM
C220		100N 50V 5%CAP 0805 SMT X7R
C221		__4U7 50V 10%CAP 1210 SMT CER
C230	6545	__1N 250V 20%CAP BLK 'Y' 10MM AC
C231	5262	__1U 275V 20%CAP BLK 'X2'26.0MM AC
C232	5827	150N 250V 20%CAP BLK 'X2' 15MM AC
C233	5827	150N 250V 20%CAP BLK 'X2' 15MM AC
C236		__1U0 50V 10%CAP 1206 SMT CER
C237		_47N 100V 10%CAP 1206 SMT X7R
C239		__2N7 100V 10%CAP 0805 SMT X7R
C243		100N 50V 5%CAP 0805 SMT X7R
C244		100N 50V 5%CAP 0805 SMT X7R
D1		MMBZ5231B 5V1 0W35 5% SMT ZEN
D2		ES3D 200V 3A0 D214 SMT SMC
D3		ES3D 200V 3A0 D214 SMT SMC
D4		MURA240T3 400V 2A 403D SMT
D5		BAV21WS 200V 0A2 SOD323 SMT
D6		BAV21WS 200V 0A2 SOD323 SMT
D7		BAV21WS 200V 0A2 SOD323 SMT
D8		BAV21WS 200V 0A2 SOD323 SMT
D9		MMBZ5231B 5V1 0W35 5% SMT ZEN
D10		MMBZ5231B 5V1 0W35 5% SMT ZEN
D11		ES3D 200V 3A0 D214 SMT SMC
D12		ES3D 200V 3A0 D214 SMT SMC
D13		MURA240T3 400V 2A 403D SMT
D14		MMBZ5231B 5V1 0W35 5% SMT ZEN
D15		BAV21WS 200V 0A2 SOD323 SMT
D16		BAV21WS 200V 0A2 SOD323 SMT
D17		MMBZ5231B 5V1 0W35 5% SMT ZEN
D18		BAV21WS 200V 0A2 SOD323 SMT
D19		BAV21WS 200V 0A2 SOD323 SMT
D20		ES3D 200V 3A0 D214 SMT SMC
D21		ES3D 200V 3A0 D214 SMT SMC
D22		MURA240T3 400V 2A 403D SMT
D23		MMBZ5231B 5V1 0W35 5% SMT ZEN
D24		BAV21WS 200V 0A2 SOD323 SMT
D25		BAV21WS 200V 0A2 SOD323 SMT
D26		MMBZ5231B 5V1 0W35 5% SMT ZEN
D27		BAV21WS 200V 0A2 SOD323 SMT
D28		BAV21WS 200V 0A2 SOD323 SMT
D29		SMAZ10-13-F 10V0 1W0 10% SMT ZEN
D30		SMAZ10-13-F 10V0 1W0 10% SMT ZEN
D31		MMBZ5231B 5V1 0W35 5% SMT ZEN
D32		BAV21WS 200V 0A2 SOD323 SMT
D33		BAV21WS 200V 0A2 SOD323 SMT
D34		BAV21WS 200V 0A2 SOD323 SMT
D35		DFLZ5V1-7 5V1 1W0 5% SMT ZEN
D36		ES1H 500V 1A0 D214 SMT SMC
D37		SMAZ10-13-F 10V0 1W0 10% SMT ZEN
D38		1SMB5948BT3 91V0 3W DIO SMT ZEN
D39		3SMAJ5932B 20V 3W0 DO214AC SMT ZEN
D40		BAV21WS 200V 0A2 SOD323 SMT
D41		BAV21WS 200V 0A2 SOD323 SMT
D42		BAV21WS 200V 0A2 SOD323 SMT
D43		MMBZ5231B 5V1 0W35 5% SMT ZEN
D44		DFLZ5V1-7 5V1 1W0 5% SMT ZEN
D45		MURA240T3 400V 2A 403D SMT
D46		DFLZ5V1-7 5V1 1W0 5% SMT ZEN
D47		MBRS140 40V 1A 1W5 SCH SMT
D48		MBRS140 40V 1A 1W5 SCH SMT
D49		SMBJ5371B 60V 5W0 DO214AA SMT ZEN
D50		SMAZ10-13-F 10V0 1W0 10% SMT ZEN
D51		ES1H 500V 1A0 D214 SMT SMC
D52		BAV21WS 200V 0A2 SOD323 SMT
D53		BAV21WS 200V 0A2 SOD323 SMT
D54		BAV21WS 200V 0A2 SOD323 SMT
D55		BAV21WS 200V 0A2 SOD323 SMT
D56		BAV21WS 200V 0A2 SOD323 SMT
D201	6772	BRIDGE 25A 400V WIRE LEAD SIP
D202		MURA240T3 400V 2A 403D SMT
D203	6845	MUR1640CTG 400V 8A DIODE DUAL CC
D204		MURA240T3 400V 2A 403D SMT
D205		MURA240T3 400V 2A 403D SMT
D206		MURA240T3 400V 2A 403D SMT
D207		MURA240T3 400V 2A 403D SMT
D209		MURA240T3 400V 2A 403D SMT
D210		MURA240T3 400V 2A 403D SMT
D211		MURA240T3 400V 2A 403D SMT
D214		MBRS140 40V 1A 1W5 SCH SMT
D215		MBRS140 40V 1A 1W5 SCH SMT
D216		MBRS140 40V 1A 1W5 SCH SMT
D217		MBRS140 40V 1A 1W5 SCH SMT
D220	6843	MUR1620CTRG 200V 16A DIODE DUAL CA
D226		BAV21WS 200V 0A2 SOD323 SMT
L1		1000UH COIL 6X6MM SMT
L2		120.0UH COIL A34 1R6 SMT
L3	6620	__64UH CHOKE 68T20AWG/T157-2
L4		120.0UH COIL A34 1R6 SMT
L5	6620	__64UH CHOKE 68T20AWG/T157-2
L6	6620	__64UH CHOKE 68T20AWG/T157-2
L7		220UH COIL 10X10MM SMT
L8		120.0UH COIL A34 1R6 SMT
L9		120.0UH COIL A34 1R6 SMT
L10		120.0UH COIL A34 1R6 SMT
L11		120.0UH COIL A34 1R6 SMT
L203	4169	14.0MH COIL 4AMP INPUT COM MODE
L204	3021	15UH COIL T175-2 29T 19AWG LITZ
L205	4169	14.0MH COIL 4AMP INPUT COM MODE
L206	6500	2700UH COIL COMMON MODE 7AMP
L219		1000UH 10% COIL 12MM SMT
Q1	6972	IRFB4227PBF TO220 NCH MFET TM
Q2	6763	IRFI4020H-117P MFET HLFBRDG TO220-5
Q3	6972	IRFB4227PBF TO220 NCH MFET TM
Q5		ZXTN19020CFFNPN SOT23F SMT
Q6	6972	IRFB4227PBF TO220 NCH MFET TM
Q7	6972	IRFB4227PBF TO220 NCH MFET TM
Q8		MMBT4401 NPN SOT-23 SMT
Q9		MMBT4401 NPN SOT-23 SMT
Q10		FOD814A OPTO-COUPLER 4P SMT IC

M1520-pg2 Parts Reference List 5/18/2016

REF	YS #	Description	REF	YS #	Description	REF	YS #	Description
Q13		MMBT4401 NPN SOT-23 SMT	R78		1W00 4R7 5% 2512 SMT RES	R208		W750 7R5 5% 2010 SMT RES
Q14		LM2991SX NEG ADJ REG SMT TO263-5	R79		W125 100K 5% 0805 SMT RES	R209		1W00 47R 5% 2512 SMT RES
Q201		ZXTN19020CFFNPN SOT23F SMT	R80		W100 1K0 1% 0805 SMT RES	R210		1W00 47R 5% 2512 SMT RES
Q202		ZXTP19020CFFPNP SOT23F SMT	R81		W125 10K00 0.1% 0805 SMT RES	R211		W250 10R 5% 1206 SMT RES
Q203		ZXTP19020CFFPNP SOT23F SMT	R82		W125 4K02 0.1% 0805 SMT RES	R212		W250 10R 5% 1206 SMT RES
Q204		MMBT4401 NPN SOT-23 SMT	R83		W125 1K800 0.1% 0805 SMT RES	R213		W250 10R 5% 1206 SMT RES
Q205		ZXTN19020CFFNPN SOT23F SMT	R84		W125 4K02 0.1% 0805 SMT RES	R214		W250 10R 5% 1206 SMT RES
Q206	6975	SPW35N60CFD MOSFET N-CN 600V TO-247	R85		W125 1K21 1% 0805 SMT RES	R216	6633	__2R5 25% 5A INRSH CURR LIM 12MM
Q207	6975	SPW35N60CFD MOSFET N-CN 600V TO-247	R86		W125 1K21 1% 0805 SMT RES	R217	6633	__2R5 25% 5A INRSH CURR LIM 12MM
R1		W100 4K99 1% 0805 SMT RES	R87		W125 100K 5% 0805 SMT RES	R240		W100 7K50 1% 0805 SMT RES
R2		W100 1K0 1% 0805 SMT RES	R88		W125 1K50 1% 0805 SMT RES	R241		W100 1K0 1% 0805 SMT RES
R3		W125 1K50 1% 0805 SMT RES	R90		W750 0R 1% 2010 SMT JMP	R242		W125 348R0 1% 0805 SMT RES
R4		W100 357K 1% 0805 SMT RES	R91		W750 0R 1% 2010 SMT JMP	R243		W250 1M0 1% 1206 SMT RES
R5		W100 1K0 1% 0805 SMT RES	R92		W125 10R0 1% 0805 SMT RES	R255		2W00 0R1 5% 2512 SMT RES
R7		1W00 33K 5% 2512 SMT RES	R93		W125 1K62 1% 0805 SMT RES	R256		2W00 0R1 5% 2512 SMT RES
R8		1W00 47K 5% 2512 SMT RES	R94		W100 13K 1% 0805 SMT RES	R257		W125 249R0 1% 0805 SMT RES
R9		1W00 10K 5% 2512 SMT RES	R95		W125 1K21 1% 0805 SMT RES	R258		W100 1K0 1% 0805 SMT RES
R10		1W00 4R7 5% 2512 SMT RES	R96		W125 1K21 1% 0805 SMT RES	R259		W100 475R 1% 0805 SMT RES
R11		W100 274K 1% 0805 SMT RES	R97		W100 2K32 1% 0805 SMT RES	R260		2W00 0R1 5% 2512 SMT RES
R12		W250 1R 5% 1206 SMT RES	R98		W100 4K99 1% 0805 SMT RES	R263		W250 10R 5% 1206 SMT RES
R13		W250 10R 5% 1206 SMT RES	R99		W100 4K99 1% 0805 SMT RES	R271		W100 4K99 1% 0805 SMT RES
R14		1W00 4R7 5% 2512 SMT RES	R100		W100 2K32 1% 0805 SMT RES	R272	6619	_10K 5% THERMISTOR VISH NTC
R15		1W00 4R7 5% 2512 SMT RES	R101		W125 1K62 1% 0805 SMT RES	R277		W250 10R 5% 1206 SMT RES
R16		W125 1K800 0.1% 0805 SMT RES	R102		W125 1K62 1% 0805 SMT RES	T1	1226	XFMR O/P 400W PQ40/40 PS10,12,15P
R17		1W00 1K 5% 2512 SMT RES	R103		W125 348R0 1% 0805 SMT RES	T201		78602/9C PULSE XFMR SMT
R18		W125 348R0 1% 0805 SMT RES	R104		W125 348R0 1% 0805 SMT RES	TP1		TEST POINT MINIATURE SMT
R19		W100 13K 1% 0805 SMT RES	R105		W100 4K75 1% 0805 SMT RES	TP2		TEST POINT MINIATURE SMT
R20		W125 91K 5% 0805 SMT RES	R106		W125 3K32 1% 0805 SMT RES	TP3		TEST POINT MINIATURE SMT
R21		1W00 15K 5% 2512 SMT RES	R107		W125 3K32 1% 0805 SMT RES	TP4		TEST POINT MINIATURE SMT
R22		W100 7K50 1% 0805 SMT RES	R108		W125 3K32 1% 0805 SMT RES	TP5		TEST POINT MINIATURE SMT
R23		W100 1K0 1% 0805 SMT RES	R109		W125 3K32 1% 0805 SMT RES	TP6		TEST POINT MINIATURE SMT
R24		W100 1K0 1% 0805 SMT RES	R110		W125 1K800 0.1% 0805 SMT RES	TP7		TEST POINT MINIATURE SMT
R25		1W00 1K 5% 2512 SMT RES	R111		W100 2K32 1% 0805 SMT RES	TP8		TEST POINT MINIATURE SMT
R27		W250 100R 5% 1206 SMT RES	R112		W125 3K32 1% 0805 SMT RES	TP9		TEST POINT MINIATURE SMT
R28		W125 100K 5% 0805 SMT RES	R113		W125 3K32 1% 0805 SMT RES	TP10		TEST POINT MINIATURE SMT
R29		W250 10R 5% 1206 SMT RES	R114		W125 4K12 1% 0805 SMT RES	TP11		TEST POINT MINIATURE SMT
R30		1W00 4R7 5% 2512 SMT RES	R115		W125 1K50 1% 0805 SMT RES	TP12		TEST POINT MINIATURE SMT
R31		1W00 100K 5% 2512 SMT RES	R116		W100 2K74 1% 0805 SMT RES	TP13		TEST POINT MINIATURE SMT
R32		W125 3K32 1% 0805 SMT RES	R117		W750 0R 1% 2010 SMT JMP	TP14		TEST POINT MINIATURE SMT
R33		W100 1K0 1% 0805 SMT RES	R118		W250 10R 5% 1206 SMT RES	TP201		TEST POINT MINIATURE SMT
R34		W125 3K32 1% 0805 SMT RES	R119		W250 10R 5% 1206 SMT RES	TP202		TEST POINT MINIATURE SMT
R35		W125 3K32 1% 0805 SMT RES	R120		W250 10R 5% 1206 SMT RES	TP205		TEST POINT MINIATURE SMT
R36		W125 3K32 1% 0805 SMT RES	R121		W100 4K75 1% 0805 SMT RES	TP206		TEST POINT MINIATURE SMT
R37		W125 10K00 0.1% 0805 SMT RES	R122		W125 10K00 0.1% 0805 SMT RES	U1		ZXGD3002E6 GATE DRVR 9A SMT SOT326
R38		1W00 33K 5% 2512 SMT RES	R123		1W00 47K 5% 2512 SMT RES	U2		LM5008A 100V REG 0A35 BUCK SW SMT
R39		1W00 4R7 5% 2512 SMT RES	R124		1W00 47K 5% 2512 SMT RES	U3		ZXGD3002E6 GATE DRVR 9A SMT SOT326
R40		1W00 4R7 5% 2512 SMT RES	R125		1W00 47K 5% 2512 SMT RES	U4		TL071CDR OPAMP JFET 3MHZ SO-8 SMT
R41		1W00 4R7 5% 2512 SMT RES	R126		W100 2K32 1% 0805 SMT RES	U5		IRS20957S DIG AUDIO DRVR SMT SOIC
R42		1W00 1K 5% 2512 SMT RES	R127		W125 249R0 1% 0805 SMT RES	U6		FOD817C OPTO-COUPLER 4P SMT IC
R43		W125 348R0 1% 0805 SMT RES	R128		1W00 47K 5% 2512 SMT RES	U7		ZXGD3002E6 GATE DRVR 9A SMT SOT326
R44		W100 13K 1% 0805 SMT RES	R129		W100 2K32 1% 0805 SMT RES	U8		ZXGD3002E6 GATE DRVR 9A SMT SOT326
R45		W125 91K 5% 0805 SMT RES	R130		W100 1K0 1% 0805 SMT RES	U9		IRS20957S DIG AUDIO DRVR SMT SOIC
R46		1W00 15K 5% 2512 SMT RES	R131		W125 8K25 1% 0805 SMT RES	U10		TL071CDR OPAMP JFET 3MHZ SO-8 SMT
R47		W100 7K50 1% 0805 SMT RES	R132		W100 4K99 1% 0805 SMT RES	U11		CNY17F-2S OPTO-COUPLER 6P SMT IC
R48		W100 1K0 1% 0805 SMT RES	R133		W100 4K99 1% 0805 SMT RES	U12		33078 DUAL OPAMP SMT SO-8
R49		W100 1K0 1% 0805 SMT RES	R134		W100 4K99 1% 0805 SMT RES	U13		33078 DUAL OPAMP SMT SO-8
R50		1W00 1K 5% 2512 SMT RES	R135		W100 4K99 1% 0805 SMT RES	U14		IRS20957S DIG AUDIO DRVR SMT SOIC
R51		1W00 47K 5% 2512 SMT RES	R136		W100 357K 1% 0805 SMT RES	U15		SN74AHC1G86 SINGLE XOR SMT SOT235
R54		W250 1M0 1% 1206 SMT RES	R137		W125 10R0 1% 0805 SMT RES	U16		TLV3201 SNGLE COMPARATOR SMT SOT235
R55		W250 10R 5% 1206 SMT RES	R138		W100 1K0 1% 0805 SMT RES	U17		TL071CDR OPAMP JFET 3MHZ SO-8 SMT
R56		1W00 4R7 5% 2512 SMT RES	R139		W125 681R 1% 0805 SMT RES	U18		TLV3201 SNGLE COMPARATOR SMT SOT235
R58		W100 1K0 1% 0805 SMT RES	R140		W125 10R0 1% 0805 SMT RES	U21		LM5008A 100V REG 0A35 BUCK SW SMT
R59		W125 10K00 0.1% 0805 SMT RES	R141		W125 10R0 1% 0805 SMT RES	U202		LNK306G OFFLINE SWITCH SMT SMD8B
R60		1W00 33K 5% 2512 SMT RES	R142		W750 0R1 5% 2010 SMT TR	U205		UCC25600 RES MODE CTRL SMT SO8
R61		1W00 4R7 5% 2512 SMT RES	R143		W750 0R1 5% 2010 SMT TR	W2	4167	2X2PIN 4.2MM RA HEADER VAL-U-LOK
R62		1W00 22R 5% 2512 SMT RES	R144		W125 10R0 1% 0805 SMT RES	W8	4019	10 CIR SOCKT DIL VT 0.1
R63		1W00 22R 5% 2512 SMT RES	R145		W100 274K 1% 0805 SMT RES	W9	3966	GRN 16AWG PREFUSED WIRE
R64		1W00 1K 5% 2512 SMT RES	R146		W125 68K 5% 0805 SMT RES	W201	4146	3 PIN POWER PIN HEADER MALE POLZED
R65		W100 301R 1% 0805 SMT RES	R147		W100 1K0 1% 0805 SMT RES	W202	4162	2 PIN POWER PIN HEADER MALE POLZED
R66		W100 13K 1% 0805 SMT RES	R148		W125 5K36 1% 0805 SMT RES	W203	4162	2 PIN POWER PIN HEADER MALE POLZED
R67		W125 47K5 1% 0805 SMT RES	R149		W100 1K0 1% 0805 SMT RES	ZD3		BAS316 100V 0A25 DIODE SOD323 SMT
R68		1W00 15K 5% 2512 SMT RES	R151		W125 47K5 1% 0805 SMT RES	ZD201		SMAZ18-13-F 18V0 1W0 5% SMT ZEN
R69		W125 10K00 0.1% 0805 SMT RES	R152		W125 100K 5% 0805 SMT RES			
R70		W125 249R0 1% 0805 SMT RES	R201		W250 10R 5% 1206 SMT RES			
R71		W100 1K0 1% 0805 SMT RES	R202		W250 10R 5% 1206 SMT RES			
R72		1W00 1K 5% 2512 SMT RES	R203		W250 10R 5% 1206 SMT RES			
R73		1W00 47K 5% 2512 SMT RES	R204		W250 10R 5% 1206 SMT RES			
R75		W250 1M0 1% 1206 SMT RES	R205		W250 10R 5% 1206 SMT RES			
R76		W100 4K75 1% 0805 SMT RES	R206		W250 10R 5% 1206 SMT RES			
R77		W250 10R 5% 1206 SMT RES	R207		1W00 47R 5% 2512 SMT RES			

M1521 PG1 Parts Reference List 7/4/2018

REF	YS #	Description
C1	7737	_10N 50V 10%CAP 0805 SMT X7R
C2	7878	__1U 25V 20%CAP 1206 SMT X7R
C3	8096	470N 100V 10%CAP 1206 SMT X7R
C4	7875	100N 100V 10%CAP 1206 SMT X7R
C5	8096	470N 100V 10%CAP 1206 SMT X7R
C6	7613	100N 25V 10%CAP 0805 SMT X7R
C7	7878	__1U 25V 20%CAP 1206 SMT X7R
C8	8088	_10U 16V 10%CAP 0805 SMT X6S
C9	5910	4700U 100V 10%CAP BLK 35X40MM 4PS
C10	7876	__2U2 200V 20%CAP 3025 SMT CER
C11	7877	__2U2 100V 20%CAP 1812 SMT X7R
C12	7927	100P 50V 10%CAP 0805 SMT NPO
C13	7741	__2N2 50V 10%CAP 0805 SMT X7R
C14	7741	__2N2 50V 10%CAP 0805 SMT X7R
C15	5910	4700U 100V 10%CAP BLK 35X40MM 4PS
C16	7748	_47P 100V 5%CAP 0805 SMT NPO
C17	8088	_10U 16V 10%CAP 0805 SMT X6S
C18	7605	__1N5 50V 5%CAP 0805 SMT NPO
C19	8092	100N 450V 10%CAP 1206 SMT X7T
C20	7737	_10N 50V 10%CAP 0805 SMT X7R
C21	7613	100N 25V 10%CAP 0805 SMT X7R
C22	7605	__1N5 50V 5%CAP 0805 SMT NPO
C23	7613	100N 25V 10%CAP 0805 SMT X7R
C24	7737	_10N 50V 10%CAP 0805 SMT X7R
C25	7738	_10U0 16V 10%CAP 1206 SMT X7R
C26	7748	_47P 100V 5%CAP 0805 SMT NPO
C27	7734	__1U0 50V 10%CAP 1206 SMT CER
C28	7734	__1U0 50V 10%CAP 1206 SMT CER
C29	8092	100N 450V 10%CAP 1206 SMT X7T
C30	7877	__2U2 100V 20%CAP 1812 SMT X7R
C31	7734	__1U0 50V 10%CAP 1206 SMT CER
C32	7734	__1U0 50V 10%CAP 1206 SMT CER
C33	7878	__1U 25V 20%CAP 1206 SMT X7R
C34	7613	100N 25V 10%CAP 0805 SMT X7R
C35	8092	100N 450V 10%CAP 1206 SMT X7T
C36	7876	__2U2 200V 20%CAP 3025 SMT CER
C37	7694	__3N3 25V 5%CAP 0805 SMT NPO
C38	7875	100N 100V 10%CAP 1206 SMT X7R
C39	7927	100P 50V 10%CAP 0805 SMT NPO
C40	7741	__2N2 50V 10%CAP 0805 SMT X7R
C41	7741	__2N2 50V 10%CAP 0805 SMT X7R
C42	7748	_47P 100V 5%CAP 0805 SMT NPO
C43	8088	_10U 16V 10%CAP 0805 SMT X6S
C44	7737	_10N 50V 10%CAP 0805 SMT X7R
C45	7613	100N 25V 10%CAP 0805 SMT X7R
C46	7875	100N 100V 10%CAP 1206 SMT X7R
C47	7738	_10U0 16V 10%CAP 1206 SMT X7R
C48	7748	_47P 100V 5%CAP 0805 SMT NPO
C49	7925	_22P 50V 5%CAP 0805 SMT NPO
C50	7925	_22P 50V 5%CAP 0805 SMT NPO
C51	5516	_47N 2000V 10%CAP AXL POLYPROP BULK
C52	7811	100U 25V 20%CAP 8X5.4 SMT ELE
C53	7734	__1U0 50V 10%CAP 1206 SMT CER
C54	7734	__1U0 50V 10%CAP 1206 SMT CER
C55	7877	__2U2 100V 20%CAP 1812 SMT X7R
C56	7877	__2U2 100V 20%CAP 1812 SMT X7R
C57	7878	__1U 25V 20%CAP 1206 SMT X7R
C58	7613	100N 25V 10%CAP 0805 SMT X7R
C59	8092	100N 450V 10%CAP 1206 SMT X7T
C60	7875	100N 100V 10%CAP 1206 SMT X7R
C61	7876	__2U2 200V 20%CAP 3025 SMT CER
C62	7875	100N 100V 10%CAP 1206 SMT X7R
C63	7927	100P 50V 10%CAP 0805 SMT NPO
C64	7741	__2N2 50V 10%CAP 0805 SMT X7R
C65	7741	__2N2 50V 10%CAP 0805 SMT X7R
C66	7748	_47P 100V 5%CAP 0805 SMT NPO
C67	8088	_10U 16V 10%CAP 0805 SMT X6S
C68	7741	__2N2 50V 10%CAP 0805 SMT X7R
C69	7613	100N 25V 10%CAP 0805 SMT X7R
C70	7798	_15N 50V 5%CAP 0805 SMT C0G
C71	7738	_10U0 16V 10%CAP 1206 SMT X7R
C72	7983	_22U 20V 10%CAP 3528 SMT TANT
C73	7613	100N 25V 10%CAP 0805 SMT X7R
C74	7748	_47P 100V 5%CAP 0805 SMT NPO
C75	7734	__1U0 50V 10%CAP 1206 SMT CER
C76	7734	__1U0 50V 10%CAP 1206 SMT CER
C77	7876	__2U2 200V 20%CAP 3025 SMT CER
C78	7877	__2U2 100V 20%CAP 1812 SMT X7R
C79	7798	_15N 50V 5%CAP 0805 SMT C0G
C80	7748	_47P 100V 5%CAP 0805 SMT NPO
C81	7741	__2N2 50V 10%CAP 0805 SMT X7R
C82	7613	100N 25V 10%CAP 0805 SMT X7R
C83	7734	__1U0 50V 10%CAP 1206 SMT CER
C84	7734	__1U0 50V 10%CAP 1206 SMT CER
C85	8088	_10U 16V 10%CAP 0805 SMT X6S
C86	5971	680N 250V 5% CAPBLK RAD POLY FLM
C87	5971	680N 250V 5% CAPBLK RAD POLY FLM
C88	5971	680N 250V 5% CAPBLK RAD POLY FLM
C89	7692	150P 50V 5%CAP 0805 SMT NPO
C90	7692	150P 50V 5%CAP 0805 SMT NPO
C91	7969	_10U 10V 20%CAP 0805 SMT Y5V
C92	8088	_10U 16V 10%CAP 0805 SMT X6S
C93	7734	__1U0 50V 10%CAP 1206 SMT CER
C94	7734	__1U0 50V 10%CAP 1206 SMT CER
C95	7693	__1N 50V 5%CAP 0805 SMT NPO
C96	7693	__1N 50V 5%CAP 0805 SMT NPO
C97	8104	150P 100V 5%CAP 0805 SMTNPO
C98	7741	__2N2 50V 10%CAP 0805 SMT X7R
C99	7878	__1U 25V 20%CAP 1206 SMT X7R
C100	7875	100N 100V 10%CAP 1206 SMT X7R
C101	7875	100N 100V 10%CAP 1206 SMT X7R
C102	7875	100N 100V 10%CAP 1206 SMT X7R
C103	7983	_22U 20V 10%CAP 3528 SMT TANT
C104	7735	__4U7 50V 10%CAP 1210 SMT CER
C105	7737	_10N 50V 10%CAP 0805 SMT X7R
C106	7694	__3N3 25V 5%CAP 0805 SMT NPO
C107	7737	_10N 50V 10%CAP 0805 SMT X7R
C109	7735	__4U7 50V 10%CAP 1210 SMT CER
C110	7737	_10N 50V 10%CAP 0805 SMT X7R
C111	7735	__4U7 50V 10%CAP 1210 SMT CER
C112	7735	__4U7 50V 10%CAP 1210 SMT CER
C113	7735	__4U7 50V 10%CAP 1210 SMT CER
C114	7735	__4U7 50V 10%CAP 1210 SMT CER
C115	7735	__4U7 50V 10%CAP 1210 SMT CER
C116	7741	__2N2 50V 10%CAP 0805 SMT X7R
C117	7741	__2N2 50V 10%CAP 0805 SMT X7R
C118	8088	_10U 16V 10%CAP 0805 SMT X6S
C201	7601	220N 50V 10%CAP 1206 SMT X7R
C202	7983	_22U 20V 10%CAP 3528 SMT TANT
C204	7734	__1U0 50V 10%CAP 1206 SMT CER
C205	8009	_82N 100V 10%CAP 0805 SMT X7R
C206	8009	_82N 100V 10%CAP 0805 SMT X7R
C207	5635	1000U 35V 20%CAP BLK RADIAL ELECT
C208	5635	1000U 35V 20%CAP BLK RADIAL ELECT
C209	6545	__1N 250V 20%CAP BLK 'Y' 10MM AC
C210	5972	680N 400V 5%CAP BLK RAD POLY FLM
C211	7601	220N 50V 10%CAP 1206 SMT X7R
C212	8009	_82N 100V 10%CAP 0805 SMT X7R
C213	6545	__1N 250V 20%CAP BLK 'Y' 10MM AC
C214	6545	__1N 250V 20%CAP BLK 'Y' 10MM AC
C215	5666	330U 400V 20%CAP BLK 25X40MM
C216	5666	330U 400V 20%CAP BLK 25X40MM
C220	7613	100N 25V 10%CAP 0805 SMT X7R
C221	7735	__4U7 50V 10%CAP 1210 SMT CER
C230	6545	__1N 250V 20%CAP BLK 'Y' 10MM AC
C231	5262	__1U 275V 20%CAP BLK 'X2'26.0MM AC
C232	5827	150N 250V 20%CAP BLK 'X2' 15MM AC
C233	5827	150N 250V 20%CAP BLK 'X2' 15MM AC
C236	7734	__1U0 50V 10%CAP 1206 SMT CER
C237	8176	_47N 100V 10%CAP 1206 SMT X7R
C239	7966	__2N7 100V 10%CAP 0805 SMT X7R
C243	7613	100N 25V 10%CAP 0805 SMT X7R
C244	7613	100N 25V 10%CAP 0805 SMT X7R
D1	7914	MMBZ5231B 5V1 0W35 5% SMT ZEN
D2	7889	ES3D 200V 3A0 D214 SMT SMC
D3	7889	ES3D 200V 3A0 D214 SMT SMC
D4	7848	MURA240T3 400V 2A DIO 403D SMT
D5	8109	BAV21WS 200V 0A2 SOD323 SMT
D6	8109	BAV21WS 200V 0A2 SOD323 SMT
D7	8109	BAV21WS 200V 0A2 SOD323 SMT
D8	8109	BAV21WS 200V 0A2 SOD323 SMT
D9	7914	MMBZ5231B 5V1 0W35 5% SMT ZEN
D10	7914	MMBZ5231B 5V1 0W35 5% SMT ZEN
D11	7889	ES3D 200V 3A0 D214 SMT SMC
D12	7889	ES3D 200V 3A0 D214 SMT SMC
D13	7848	MURA240T3 400V 2A DIO 403D SMT
D14	7914	MMBZ5231B 5V1 0W35 5% SMT ZEN
D15	8109	BAV21WS 200V 0A2 SOD323 SMT
D16	8109	BAV21WS 200V 0A2 SOD323 SMT
D17	7914	MMBZ5231B 5V1 0W35 5% SMT ZEN
D18	8109	BAV21WS 200V 0A2 SOD323 SMT
D19	8109	BAV21WS 200V 0A2 SOD323 SMT
D20	7889	ES3D 200V 3A0 D214 SMT SMC
D21	7889	ES3D 200V 3A0 D214 SMT SMC
D22	7848	MURA240T3 400V 2A DIO 403D SMT
D23	7914	MMBZ5231B 5V1 0W35 5% SMT ZEN
D24	8109	BAV21WS 200V 0A2 SOD323 SMT
D25	8109	BAV21WS 200V 0A2 SOD323 SMT
D26	7914	MMBZ5231B 5V1 0W35 5% SMT ZEN
D27	8109	BAV21WS 200V 0A2 SOD323 SMT
D28	8109	BAV21WS 200V 0A2 SOD323 SMT
D29	7996	SMAZ10-13-F 10V0 1W0 10% SMT ZEN
D30	7996	SMAZ10-13-F 10V0 1W0 10% SMT ZEN
D31	7914	MMBZ5231B 5V1 0W35 5% SMT ZEN
D32	8109	BAV21WS 200V 0A2 SOD323 SMT
D33	8109	BAV21WS 200V 0A2 SOD323 SMT
D34	8109	BAV21WS 200V 0A2 SOD323 SMT
D35	7965	DFLZ5V1-7 5V1 1W0 5% SMT ZEN
D36	8085	ES1H 500V 1A0 D214 UPGT 8814
D37	7996	SMAZ10-13-F 10V0 1W0 10% SMT ZEN
D38	7972	1SMB5948BT3 91V0 3W DIO SMT ZEN
D39	8186	3SMAJ5932B 20V 3W0 DO214AC SMT ZEN
D40	8109	BAV21WS 200V 0A2 SOD323 SMT
D41	8109	BAV21WS 200V 0A2 SOD323 SMT
D42	8109	BAV21WS 200V 0A2 SOD323 SMT
D43	7914	MMBZ5231B 5V1 0W35 5% SMT ZEN
D44	7965	DFLZ5V1-7 5V1 1W0 5% SMT ZEN
D45	7848	MURA240T3 400V 2A DIO 403D SMT
D46	7965	DFLZ5V1-7 5V1 1W0 5% SMT ZEN
D47	7962	MBRS140 40V 1A 1W5 SCH SMT
D48	7962	MBRS140 40V 1A 1W5 SCH SMT
D49	8185	SMBJ5371B 60V 5W0 DO214AA SMT ZEN
D50	7996	SMAZ10-13-F 10V0 1W0 10% SMT ZEN
D51	8085	ES1H 500V 1A0 D214 UPGT 8814
D52	8109	BAV21WS 200V 0A2 SOD323 SMT
D53	8109	BAV21WS 200V 0A2 SOD323 SMT
D54	8109	BAV21WS 200V 0A2 SOD323 SMT
D55	8109	BAV21WS 200V 0A2 SOD323 SMT
D56	8109	BAV21WS 200V 0A2 SOD323 SMT
D201	6772	BRIDGE 25A 400V WIRE LEAD SIP
D202	7848	MURA240T3 400V 2A DIO 403D SMT
D203	6845	MUR1640CTG 400V 8A DIODE DUAL CC
D204	7848	MURA240T3 400V 2A DIO 403D SMT
D205	7848	MURA240T3 400V 2A DIO 403D SMT
D206	7848	MURA240T3 400V 2A DIO 403D SMT
D207	7848	MURA240T3 400V 2A DIO 403D SMT
D209	7848	MURA240T3 400V 2A DIO 403D SMT
D210	7848	MURA240T3 400V 2A DIO 403D SMT
D211	7848	MURA240T3 400V 2A DIO 403D SMT
D214	7962	MBRS140 40V 1A 1W5 SCH SMT
D215	7962	MBRS140 40V 1A 1W5 SCH SMT
D216	7962	MBRS140 40V 1A 1W5 SCH SMT
D217	7962	MBRS140 40V 1A 1W5 SCH SMT
D220	6843	MUR1620CTRG 200V 16A DIODE DUAL CA
D226	8109	BAV21WS 200V 0A2 SOD323 SMT
EC4	3751	5/16 SNAP IN SPACER RICHCO
EC8	3751	5/16 SNAP IN SPACER RICHCO
EC9	3751	5/16 SNAP IN SPACER RICHCO
EC10	3751	5/16 SNAP IN SPACER RICHCO
L1	8091	1000UH COIL 6X6MM SMT
L2	8101	120.0UH COIL A34 1R6 SMT
L3	6620	__64UH CHOKE 68T20AWG/T157-2
L4	8101	120.0UH COIL A34 1R6 SMT
L5	6620	__64UH CHOKE 68T20AWG/T157-2
L6	6620	__64UH CHOKE 68T20AWG/T157-2
L7	8152	220UH COIL 10X10MM SMT
L8	8101	120.0UH COIL A34 1R6 SMT
L9	8101	120.0UH COIL A34 1R6 SMT
L10	8101	120.0UH COIL A34 1R6 SMT
L11	8101	120.0UH COIL A34 1R6 SMT
L203	4169	14.0MH COIL 4AMP INPUT COM MODE
L204	3021	__15UH COIL T175-2 29T 19AWG LITZ
L205	4169	14.0MH COIL 4AMP INPUT COM MODE
L206	6500	2700UH COIL COMMON MODE 7AMP
L219	7974	1000UH 10% COIL 12MM SMT
Q1	6972	IRFB4227PBF TO220 NCH MFET TM
Q2	6763	IRFI4020H-117P MFET HLFBRDG TO220-5
Q3	6972	IRFB4227PBF TO220 NCH MFET TM
Q5	8127	ZXTN19020CFFNPN SOT23F SMT
Q6	6972	IRFB4227PBF TO220 NCH MFET TM

M1521 PG2 Parts Reference List 7/4/2018

REF	YS #	Description
Q7	6972	IRFB4227PBF TO220 NCH MFET TM
Q8	7665	MMBT4401 NPN SOT-23 SMT
Q9	7665	MMBT4401 NPN SOT-23 SMT
Q10	8107	FOD814A OPTO-COUPLER 4P SMT IC
Q13	7665	MMBT4401 NPN SOT-23 SMT
Q14	8136	LM2991SX NEG ADJ REG SMT TO263-5
Q201	8127	ZXTN19020CFFNPN SOT23F SMT
Q202	8128	ZXTP19020CFFPNP SOT23F SMT
Q203	8128	ZXTP19020CFFPNP SOT23F SMT
Q204	7665	MMBT4401 NPN SOT-23 SMT
Q205	8127	ZXTN19020CFFNPN SOT23F SMT
Q206	6975	SPW35N60CFD MOSFET N-CN 600V TO-247
Q207	6975	SPW35N60CFD MOSFET N-CN 600V TO-247
R1	7679	W100 4K99 1% 0805 SMT RES
R2	7621	W100 1K0 1% 0805 SMT RES
R3	7649	W125 1K50 1% 0805 SMT RES
R4	7639	W100 357K 1% 0805 SMT RES
R5	7621	W100 1K0 1% 0805 SMT RES
R7	8094	1W00 33K 5% 2512 SMT RES
R8	8157	1W00 47K 5% 2512 SMT RES
R9	8095	1W00 10K 5% 2512 SMT RES
R10	8012	1W00 4R7 5% 2512 SMT RES
R11	7686	W100 274K 1% 0805 SMT RES
R12	7739	W250 1R 5% 1206 SMT RES
R13	7852	W250 10R 5% 1206 SMT RES
R14	8012	1W00 4R7 5% 2512 SMT RES
R15	8012	1W00 4R7 5% 2512 SMT RES
R16	7899	W125 1K800 0.1% 0805 SMT RES
R17	8133	1W00 1K 5% 2512 SMT RES
R18	7672	W125 348R0 1% 0805 SMT RES
R19	7627	W100 13K 1% 0805 SMT RES
R20	8160	W125 91K 5% 0805 SMT RES
R21	8093	1W00 15K 5% 2512 SMT RES
R22	7822	W100 7K50 1% 0805 SMT RES
R23	7621	W100 1K0 1% 0805 SMT RES
R24	7621	W100 1K0 1% 0805 SMT RES
R25	8133	1W00 1K 5% 2512 SMT RES
R27	7853	W250 100R 5% 1206 SMT RES
R28	7864	W125 100K 5% 0805 SMT RES
R29	7852	W250 10R 5% 1206 SMT RES
R30	8012	1W00 4R7 5% 2512 SMT RES
R31	7611	1W00 100K 5% 2512 SMT RES
R32	7637	W125 3K32 1% 0805 SMT RES
R33	7621	W100 1K0 1% 0805 SMT RES
R34	7637	W125 3K32 1% 0805 SMT RES
R35	7637	W125 3K32 1% 0805 SMT RES
R36	7637	W125 3K32 1% 0805 SMT RES
R37	7928	W125 10K00 0.1% 0805 SMT RES
R38	8094	1W00 33K 5% 2512 SMT RES
R39	8012	1W00 4R7 5% 2512 SMT RES
R40	8012	1W00 4R7 5% 2512 SMT RES
R41	8012	1W00 4R7 5% 2512 SMT RES
R42	8133	1W00 1K 5% 2512 SMT RES
R43	7672	W125 348R0 1% 0805 SMT RES
R44	7627	W100 13K 1% 0805 SMT RES
R45	8160	W125 91K 5% 0805 SMT RES
R46	8093	1W00 15K 5% 2512 SMT RES
R47	7822	W100 7K50 1% 0805 SMT RES
R48	7621	W100 1K0 1% 0805 SMT RES
R49	7621	W100 1K0 1% 0805 SMT RES
R50	8133	1W00 1K 5% 2512 SMT RES
R51	8157	1W00 47K 5% 2512 SMT RES
R54	7651	W250 1M0 1% 1206 SMT RES
R55	7852	W250 10R 5% 1206 SMT RES
R56	8012	1W00 4R7 5% 2512 SMT RES
R58	7621	W100 1K0 1% 0805 SMT RES
R59	7928	W125 10K00 0.1% 0805 SMT RES
R60	8094	1W00 33K 5% 2512 SMT RES
R61	8012	1W00 4R7 5% 2512 SMT RES
R62	7901	1W00 22R 5% 2512 SMT RES
R63	7901	1W00 22R 5% 2512 SMT RES
R64	8133	1W00 1K 5% 2512 SMT RES
R65	7709	W100 301R 1% 0805 SMT RES
R66	7627	W100 13K 1% 0805 SMT RES
R67	7824	W125 47K5 1% 0805 SMT RES
R68	8093	1W00 15K 5% 2512 SMT RES
R69	7928	W125 10K00 0.1% 0805 SMT RES
R70	7671	W125 249R0 1% 0805 SMT RES
R71	7621	W100 1K0 1% 0805 SMT RES
R72	8133	1W00 1K 5% 2512 SMT RES
R73	8157	1W00 47K 5% 2512 SMT RES
R75	7651	W250 1M0 1% 1206 SMT RES
R76	7642	W100 4K75 1% 0805 SMT RES
R77	7852	W250 10R 5% 1206 SMT RES
R78	8012	1W00 4R7 5% 2512 SMT RES
R79	7864	W125 100K 5% 0805 SMT RES
R80	7621	W100 1K0 1% 0805 SMT RES
R81	7928	W125 10K00 0.1% 0805 SMT RES
R82	8189	W125 4K02 0.1% 0805 SMT RES
R83	7899	W125 1K800 0.1% 0805 SMT RES
R84	8189	W125 4K02 0.1% 0805 SMT RES
R85	7675	W125 1K21 1% 0805 SMT RES
R86	7675	W125 1K21 1% 0805 SMT RES
R87	7864	W125 100K 5% 0805 SMT RES
R88	7649	W125 1K50 1% 0805 SMT RES
R90	7998	W750 0R 1% 2010 SMT JMP
R91	7998	W750 0R 1% 2010 SMT JMP
R92	7821	W125 10R0 1% 0805 SMT RES
R93	8137	W125 1K62 1% 0805 SMT RES
R94	7627	W100 13K 1% 0805 SMT RES
R95	7675	W125 1K21 1% 0805 SMT RES
R96	7675	W125 1K21 1% 0805 SMT RES
R97	7632	W100 2K32 1% 0805 SMT RES
R98	7679	W100 4K99 1% 0805 SMT RES
R99	7679	W100 4K99 1% 0805 SMT RES
R100	7632	W100 2K32 1% 0805 SMT RES
R101	8137	W125 1K62 1% 0805 SMT RES
R102	8137	W125 1K62 1% 0805 SMT RES
R103	7672	W125 348R0 1% 0805 SMT RES
R104	7672	W125 348R0 1% 0805 SMT RES
R105	7642	W100 4K75 1% 0805 SMT RES
R106	7637	W125 3K32 1% 0805 SMT RES
R107	7637	W125 3K32 1% 0805 SMT RES
R108	7637	W125 3K32 1% 0805 SMT RES
R109	7637	W125 3K32 1% 0805 SMT RES
R110	7899	W125 1K800 0.1% 0805 SMT RES
R111	7632	W100 2K32 1% 0805 SMT RES
R112	7637	W125 3K32 1% 0805 SMT RES
R113	7637	W125 3K32 1% 0805 SMT RES
R114	8177	W125 4K12 1% 0805 SMT RES
R115	7649	W125 1K50 1% 0805 SMT RES
R116	7633	W100 2K74 1% 0805 SMT RES
R118	7852	W250 10R 5% 1206 SMT RES
R119	7852	W250 10R 5% 1206 SMT RES
R120	7852	W250 10R 5% 1206 SMT RES
R121	7642	W100 4K75 1% 0805 SMT RES
R122	7928	W125 10K00 0.1% 0805 SMT RES
R123	8157	1W00 47K 5% 2512 SMT RES
R124	8157	1W00 47K 5% 2512 SMT RES
R125	8157	1W00 47K 5% 2512 SMT RES
R126	7632	W100 2K32 1% 0805 SMT RES
R127	7671	W125 249R0 1% 0805 SMT RES
R128	8157	1W00 47K 5% 2512 SMT RES
R129	7632	W100 2K32 1% 0805 SMT RES
R130	7621	W100 1K0 1% 0805 SMT RES
R131	7681	W125 8K25 1% 0805 SMT RES
R132	7679	W100 4K99 1% 0805 SMT RES
R133	7679	W100 4K99 1% 0805 SMT RES
R134	7679	W100 4K99 1% 0805 SMT RES
R135	7679	W100 4K99 1% 0805 SMT RES
R136	7639	W100 357K 1% 0805 SMT RES
R137	7821	W125 10R0 1% 0805 SMT RES
R138	7621	W100 1K0 1% 0805 SMT RES
R139	7646	W125 681R 1% 0805 SMT RES
R140	7821	W125 10R0 1% 0805 SMT RES
R141	7821	W125 10R0 1% 0805 SMT RES
R142	8172	W750 0R1 5% 2010 SMT TR
R143	8172	W750 0R1 5% 2010 SMT TR
R144	7821	W125 10R0 1% 0805 SMT RES
R145	7686	W100 274K 1% 0805 SMT RES
R146	8051	W125 68K 5% 0805 SMT RES
R147	7621	W100 1K0 1% 0805 SMT RES
R148	8153	W125 5K36 1% 0805 SMT RES
R149	7621	W100 1K0 1% 0805 SMT RES
R151	7824	W125 47K5 1% 0805 SMT RES
R152	7864	W125 100K 5% 0805 SMT RES
R201	7852	W250 10R 5% 1206 SMT RES
R202	7852	W250 10R 5% 1206 SMT RES
R203	7852	W250 10R 5% 1206 SMT RES
R204	7852	W250 10R 5% 1206 SMT RES
R205	7852	W250 10R 5% 1206 SMT RES
R206	7852	W250 10R 5% 1206 SMT RES
R207	7964	1W00 47R 5% 2512 SMT RES
R208	8156	W750 7R5 5% 2010 SMT RES
R209	7964	1W00 47R 5% 2512 SMT RES
R210	7964	1W00 47R 5% 2512 SMT RES
R211	7852	W250 10R 5% 1206 SMT RES
R212	7852	W250 10R 5% 1206 SMT RES
R213	7852	W250 10R 5% 1206 SMT RES
R214	7852	W250 10R 5% 1206 SMT RES
R216	6633	2R5 25% 5A INRSH CURR LIM 12MM
R217	6633	2R5 25% 5A INRSH CURR LIM 12MM
R240	7822	W100 7K50 1% 0805 SMT RES
R241	7621	W100 1K0 1% 0805 SMT RES
R242	7672	W125 348R0 1% 0805 SMT RES
R243	7651	W250 1M0 1% 1206 SMT RES
R255	7980	2W00 0R1 5% 2512 SMT RES
R256	7980	2W00 0R1 5% 2512 SMT RES
R257	7671	W125 249R0 1% 0805 SMT RES
R258	7621	W100 1K0 1% 0805 SMT RES
R259	7673	W100 475R 1% 0805 SMT RES
R260	7980	2W00 0R1 5% 2512 SMT RES
R263	7852	W250 10R 5% 1206 SMT RES
R271	7679	W100 4K99 1% 0805 SMT RES
R272	6619	10K 5% THERMISTOR VISH NTC
R277	7852	W250 10R 5% 1206 SMT RES
T1	1226	XFMR O/P 400W PQ40/40 PS10,12,15P
T201	8115	78602/9C PULSE XFMR SMT
TP1	8002	TEST POINT MINIATURE SMT
TP2	8002	TEST POINT MINIATURE SMT
TP3	8002	TEST POINT MINIATURE SMT
TP4	8002	TEST POINT MINIATURE SMT
TP5	8002	TEST POINT MINIATURE SMT
TP6	8002	TEST POINT MINIATURE SMT
TP7	8002	TEST POINT MINIATURE SMT
TP8	8002	TEST POINT MINIATURE SMT
TP9	8002	TEST POINT MINIATURE SMT
TP10	8002	TEST POINT MINIATURE SMT
TP11	8002	TEST POINT MINIATURE SMT
TP12	8002	TEST POINT MINIATURE SMT
TP13	8002	TEST POINT MINIATURE SMT
TP14	8002	TEST POINT MINIATURE SMT
TP201	8002	TEST POINT MINIATURE SMT
TP202	8002	TEST POINT MINIATURE SMT
TP205	8002	TEST POINT MINIATURE SMT
TP206	8002	TEST POINT MINIATURE SMT
U1	7949	ZXGD3002E6 GATE DRVR 9A SMT SOT326
U2	7963	LM5008A 100V REG 0A35 BUCK SW SMT
U3	7949	ZXGD3002E6 GATE DRVR 9A SMT SOT326
U4	7993	TL071CDR OPAMP JFET 3MHZ SO-8 SMT
U5	7884	IRS20957S DIG AUDIO DRVR SMT SOIC
U6	6636	FOD817C OPTO-COUPLER 4P SMT IC
U7	7949	ZXGD3002E6 GATE DRVR 9A SMT SOT326
U8	7949	ZXGD3002E6 GATE DRVR 9A SMT SOT326
U9	7884	IRS20957S DIG AUDIO DRVR SMT SOIC
U10	7993	TL071CDR OPAMP JFET 3MHZ SO-8 SMT
U11	8121	CNY17F-2S OPTO-COUPLER 6P SMT IC
U12	7817	33078 DUAL OPAMP SMT SO-8
U13	7817	33078 DUAL OPAMP SMT SO-8
U14	7884	IRS20957S DIG AUDIO DRVR SMT SOIC
U15	7812	SN74AHC1G86 SINGLE XOR SMT SOT235
U16	8124	TLV3201 SNGLE COMPARATOR SMT SOT235
U17	7993	TL071CDR OPAMP JFET 3MHZ SO-8 SMT
U18	8124	TLV3201 SNGLE COMPARATOR SMT SOT235
U21	7963	LM5008A 100V REG 0A35 BUCK SW SMT
U202	8158	LNK306G OFFLINE SWITCH SMT SMD8B
U205	7987	UCC25600 RES MODE CTRL SMT SO8
W2	4167	2X2PIN 4.2MM RA HEADER VAL-U-LOK
W8	4019	10 CIR SOCKT DIL VT 0.1
W201	4146	3 PIN POWER PIN HEADER MALE POLZED
W202	4162	2 PIN POWER PIN HEADER MALE POLZED
W203	4162	2 PIN POWER PIN HEADER MALE POLZED
ZD3	7973	BAS316 100V 0A25 DIODE SOD323 SMT
ZD201	8159	SMAZ18-13-F 18V0 1W0 5% SMT ZEN

M1522 PG1 Parts Reference List 7/4/2018

REF	YS #	Description
C1	7737	10N 50V 10%CAP 0805 SMT X7R
C2	7878	1U 25V 20%CAP 1206 SMT X7R
C3	8096	470N 100V 10%CAP 1206 SMT X7R
C4	7875	100N 100V 10%CAP 1206 SMT X7R
C5	7877	2U2 100V 20%CAP 1812 SMT X7R
C6	5979	100N 50V 5%CAP 0805 SMT X7R
C7	7878	1U 25V 20%CAP 1206 SMT X7R
C8	8088	10U 16V 10%CAP 0805 SMT X6S
C9	5665	1500U 100V 20%CAP BLK 22X35MM
C10	7876	2U2 200V 20%CAP 3025 SMT CER
C11	7877	2U2 100V 20%CAP 1812 SMT X7R
C12	7737	10N 50V 10%CAP 0805 SMT X7R
C13	7741	2N2 50V 10%CAP 0805 SMT X7R
C14	7741	2N2 50V 10%CAP 0805 SMT X7R
C15	5665	1500U 100V 20%CAP BLK 22X35MM
C16	7748	47P 100V 5%CAP 0805 SMT NPO
C17	8088	10U 16V 10%CAP 0805 SMT X6S
C18	7693	1N 50V 5%CAP 0805 SMT NPO
C19	8092	100N 450V 10%CAP 1206 SMT X7T
C20	7737	10N 50V 10%CAP 0805 SMT X7R
C21	5979	100N 50V 5%CAP 0805 SMT X7R
C22	7693	1N 50V 5%CAP 0805 SMT NPO
C23	5979	100N 50V 5%CAP 0805 SMT X7R
C24	7737	10N 50V 10%CAP 0805 SMT X7R
C25	8272	220P 100V 10%CAP 0805 SMT X7R
C26	7748	47P 100V 5%CAP 0805 SMT NPO
C27	7735	4U7 50V 10%CAP 1210 SMT CER
C28	7735	4U7 50V 10%CAP 1210 SMT CER
C29	8092	100N 450V 10%CAP 1206 SMT X7T
C30	7877	2U2 100V 20%CAP 1812 SMT X7R
C31	7878	1U 25V 20%CAP 1206 SMT X7R
C32	5840	22N 400V 10%CAP BLK RAD POLY FLM
C34	7694	3N3 25V 5%CAP 0805 SMT NPO
C37	7694	3N3 25V 5%CAP 0805 SMT NPO
C41	5979	100N 50V 5%CAP 0805 SMT X7R
C43	5979	100N 50V 5%CAP 0805 SMT X7R
C44	5979	100N 50V 5%CAP 0805 SMT X7R
C45	7878	1U 25V 20%CAP 1206 SMT X7R
C46	7878	1U 25V 20%CAP 1206 SMT X7R
C49	7811	100U 25V 20%CAP 8X5.4 SMT ELE
C51	5516	47N 2000V 10%CAP AXL POLYPROP BULK
C53	7735	4U7 50V 10%CAP 1210 SMT CER
C54	7735	4U7 50V 10%CAP 1210 SMT CER
C55	7877	2U2 100V 20%CAP 1812 SMT X7R
C56	7877	2U2 100V 20%CAP 1812 SMT X7R
C57	7878	1U 25V 20%CAP 1206 SMT X7R
C58	7878	1U 25V 20%CAP 1206 SMT X7R
C59	8092	100N 450V 10%CAP 1206 SMT X7T
C60	7878	1U 25V 20%CAP 1206 SMT X7R
C61	7876	2U2 200V 20%CAP 3025 SMT CER
C62	8092	100N 450V 10%CAP 1206 SMT X7T
C63	7878	1U 25V 20%CAP 1206 SMT X7R
C64	7741	2N2 50V 10%CAP 0805 SMT X7R
C65	7741	2N2 50V 10%CAP 0805 SMT X7R
C66	7748	47P 100V 5%CAP 0805 SMT NPO
C67	8088	10U 16V 10%CAP 0805 SMT X6S
C68	7741	2N2 50V 10%CAP 0805 SMT X7R
C69	7878	1U 25V 20%CAP 1206 SMT X7R
C70	7737	10N 50V 10%CAP 0805 SMT X7R
C71	7693	1N 50V 5%CAP 0805 SMT NPO
C72	7738	10U0 16V 10%CAP 1206 SMT X7R
C73	5979	100N 50V 5%CAP 0805 SMT X7R
C74	7748	47P 100V 5%CAP 0805 SMT NPO
C75	5979	100N 50V 5%CAP 0805 SMT X7R
C76	7734	1U0 50V 10%CAP 1206 SMT CER
C77	7877	2U2 100V 20%CAP 1812 SMT X7R
C78	7877	2U2 100V 20%CAP 1812 SMT X7R
C79	7737	10N 50V 10%CAP 0805 SMT X7R
C80	7878	1U 25V 20%CAP 1206 SMT X7R
C81	7741	2N2 50V 10%CAP 0805 SMT X7R
C82	7877	2U2 100V 20%CAP 1812 SMT X7R
C83	7875	100N 100V 10%CAP 1206 SMT X7R
C84	5980	10P 1000V 10%CAP 1206 SMT X7R
C85	8088	10U 16V 10%CAP 0805 SMT X6S
C86	5971	680N 250V 5% CAPBLK RAD POLY FLM
C88	5971	680N 250V 5% CAPBLK RAD POLY FLM
C89	7692	150P 50V 5%CAP 0805 SMT NPO
C90	7738	10U0 16V 10%CAP 1206 SMT X7R
C91	7878	1U 25V 20%CAP 1206 SMT X7R
C92	7697	22U 16V 5%CAP 5X5.5 SMT ELC
C93	7734	1U0 50V 10%CAP 1206 SMT CER
C94	7734	1U0 50V 10%CAP 1206 SMT CER
C95	7697	22U 16V 5%CAP 5X5.5 SMT ELC
C96	7877	2U2 100V 20%CAP 1812 SMT X7R
C97	7877	2U2 100V 20%CAP 1812 SMT X7R
C98	7741	2N2 50V 10%CAP 0805 SMT X7R
C99	7878	1U 25V 20%CAP 1206 SMT X7R
C100	7875	100N 100V 10%CAP 1206 SMT X7R
C101	7875	100N 100V 10%CAP 1206 SMT X7R
C102	7694	3N3 25V 5%CAP 0805 SMT NPO
C104	7877	2U2 100V 20%CAP 1812 SMT X7R
C105	8096	470N 100V 10%CAP 1206 SMT X7R
C106	7694	3N3 25V 5%CAP 0805 SMT NPO
C107	7737	10N 50V 10%CAP 0805 SMT X7R
C108	7735	4U7 50V 10%CAP 1210 SMT CER
C109	7735	4U7 50V 10%CAP 1210 SMT CER
C110	7737	10N 50V 10%CAP 0805 SMT X7R
C111	7927	100P 50V 10%CAP 0805 SMT NPO
C112	7735	4U7 50V 10%CAP 1210 SMT CER
C113	7927	100P 50V 10%CAP 0805 SMT NPO
C114	7693	1N 50V 5%CAP 0805 SMT NPO
C115	7735	4U7 50V 10%CAP 1210 SMT CER
C116	7693	1N 50V 5%CAP 0805 SMT NPO
C117	5979	100N 50V 5%CAP 0805 SMT X7R
C118	7737	10N 50V 10%CAP 0805 SMT X7R
C119	5665	1500U 100V 20%CAP BLK 22X35MM
C120	5665	1500U 100V 20%CAP BLK 22X35MM
C121	5665	1500U 100V 20%CAP BLK 22X35MM
C122	5665	1500U 100V 20%CAP BLK 22X35MM
C123	7735	4U7 50V 10%CAP 1210 SMT CER
C124	7735	4U7 50V 10%CAP 1210 SMT CER
C125	5840	22N 400V 10%CAP BLK RAD POLY FLM
C126	7737	10N 50V 10%CAP 0805 SMT X7R
C127	7875	100N 100V 10%CAP 1206 SMT X7R
C128	7693	1N 50V 5%CAP 0805 SMT NPO
C129	7694	3N3 25V 5%CAP 0805 SMT NPO
C130	7931	270P 50V 5%CAP 0805 SMT NPO
C131	7737	10N 50V 10%CAP 0805 SMT X7R
C132	7737	10N 50V 10%CAP 0805 SMT X7R
C133	8096	470N 100V 10%CAP 1206 SMT X7R
C134	7734	1U0 50V 10%CAP 1206 SMT CER
C135	7748	47P 100V 5%CAP 0805 SMT NPO
C136	7737	10N 50V 10%CAP 0805 SMT X7R
C137	7748	47P 100V 5%CAP 0805 SMT NPO
C138	7737	10N 50V 10%CAP 0805 SMT X7R
C139	7878	1U 25V 20%CAP 1206 SMT X7R
C140	7748	47P 100V 5%CAP 0805 SMT NPO
C141	7877	2U2 100V 20%CAP 1812 SMT X7R
C142	7799	5N6 50V 5%CAP 0805 SMT C0G
C143	7799	5N6 50V 5%CAP 0805 SMT C0G
C144	7734	1U0 50V 10%CAP 1206 SMT CER
C145	5979	100N 50V 5%CAP 0805 SMT X7R
C146	5979	100N 50V 5%CAP 0805 SMT X7R
C147	7878	1U 25V 20%CAP 1206 SMT X7R
C148	7878	1U 25V 20%CAP 1206 SMT X7R
C149	7878	1U 25V 20%CAP 1206 SMT X7R
C150	7878	1U 25V 20%CAP 1206 SMT X7R
C151	7878	1U 25V 20%CAP 1206 SMT X7R
C152	7878	1U 25V 20%CAP 1206 SMT X7R
C153	7735	4U7 50V 10%CAP 1210 SMT CER
C154	7735	4U7 50V 10%CAP 1210 SMT CER
C155	7878	1U 25V 20%CAP 1206 SMT X7R
C156	7878	1U 25V 20%CAP 1206 SMT X7R
C157	7878	1U 25V 20%CAP 1206 SMT X7R
C158	7878	1U 25V 20%CAP 1206 SMT X7R
C159	7878	1U 25V 20%CAP 1206 SMT X7R
C204	7734	1U0 50V 10%CAP 1206 SMT CER
C209	6545	1N 250V 20%CAP BLK 'Y' 10MM AC
C210	5972	680N 400V 5%CAP BLK RAD POLY FLM
C213	6545	1N 250V 20%CAP BLK 'Y' 10MM AC
C214	6545	1N 250V 20%CAP BLK 'Y' 10MM AC
C215	5663	1200U 200V 20%CAP BLK 25X40MM
C216	5663	1200U 200V 20%CAP BLK 25X40MM
C220	5979	100N 50V 5%CAP 0805 SMT X7R
C221	7735	4U7 50V 10%CAP 1210 SMT CER
C230	6545	1N 250V 20%CAP BLK 'Y' 10MM AC
C231	5262	1U 275V 20%CAP BLK 'X2'26.0MM AC
C232	5827	150N 250V 20%CAP BLK 'X2' 15MM AC
C233	5262	1U 275V 20%CAP BLK 'X2'26.0MM AC
C236	7734	1U0 50V 10%CAP 1206 SMT CER
C237	7601	220N 50V 10%CAP 1206 SMT X7R
C239	7737	10N 50V 10%CAP 0805 SMT X7R
C243	5979	100N 50V 5%CAP 0805 SMT X7R
C244	7738	10U0 16V 10%CAP 1206 SMT X7R
D1	8109	BAV21WS 200V 0A2 SOD323 SMT
D2	7889	ES3D 200V 3A0 D214 SMT SMC
D3	7889	ES3D 200V 3A0 D214 SMT SMC
D4	7848	MURA240T3 400V 2A DIO 403D SMT
D5	8109	BAV21WS 200V 0A2 SOD323 SMT
D6	8109	BAV21WS 200V 0A2 SOD323 SMT
D7	8109	BAV21WS 200V 0A2 SOD323 SMT
D8	7830	MM3Z12VT1G 12V0 0W2 5% SMT ZEN
D9	7914	MMBZ5231B 5V1 0W35 5% SMT ZEN
D10	7830	MM3Z12VT1G 12V0 0W2 5% SMT ZEN
D14	7830	MM3Z12VT1G 12V0 0W2 5% SMT ZEN
D17	7830	MM3Z12VT1G 12V0 0W2 5% SMT ZEN
D18	8076	MMSZ4690T1G 5V6 0W5 5% SMT ZEN
D19	7830	MM3Z12VT1G 12V0 0W2 5% SMT ZEN
D20	7889	ES3D 200V 3A0 D214 SMT SMC
D21	7889	ES3D 200V 3A0 D214 SMT SMC
D22	7848	MURA240T3 400V 2A DIO 403D SMT
D23	7830	MM3Z12VT1G 12V0 0W2 5% SMT ZEN
D24	8109	BAV21WS 200V 0A2 SOD323 SMT
D25	8109	BAV21WS 200V 0A2 SOD323 SMT
D26	8185	SMBJ5371B 60V 5W0 DO214AA SMT ZEN
D27	8109	BAV21WS 200V 0A2 SOD323 SMT
D28	8109	BAV21WS 200V 0A2 SOD323 SMT
D29	7996	SMAZ10-13-F 10V0 1W0 10% SMT ZEN
D30	7996	SMAZ10-13-F 10V0 1W0 10% SMT ZEN
D31	8185	SMBJ5371B 60V 5W0 DO214AA SMT ZEN
D32	8109	BAV21WS 200V 0A2 SOD323 SMT
D34	8109	BAV21WS 200V 0A2 SOD323 SMT
D35	7965	DFLZ5V1-7 5V1 1W0 5% SMT ZEN
D36	8085	ES1H 500V 1A0 D214 UPGT 8814
D37	7996	SMAZ10-13-F 10V0 1W0 10% SMT ZEN
D39	7848	MURA240T3 400V 2A DIO 403D SMT
D40	8109	BAV21WS 200V 0A2 SOD323 SMT
D41	8109	BAV21WS 200V 0A2 SOD323 SMT
D43	7914	MMBZ5231B 5V1 0W35 5% SMT ZEN
D44	7750	CDSF4148 75V 0A15 1005 SMT
D45	7830	MM3Z12VT1G 12V0 0W2 5% SMT ZEN
D46	7914	MMBZ5231B 5V1 0W35 5% SMT ZEN
D47	6649	CDBF0130L 30V 1A SCH SOD323F SMT
D48	7973	BAS316 100V 0A25 DIODE SOD323 SMT
D50	7750	CDSF4148 75V 0A15 1005 SMT
D51	7750	CDSF4148 75V 0A15 1005 SMT
D52	8109	BAV21WS 200V 0A2 SOD323 SMT
D53	7750	CDSF4148 75V 0A15 1005 SMT
D54	8109	BAV21WS 200V 0A2 SOD323 SMT
D55	7750	CDSF4148 75V 0A15 1005 SMT
D57	6649	CDBF0130L 30V 1A SCH SOD323F SMT
D58	6649	CDBF0130L 30V 1A SCH SOD323F SMT
D59	6649	CDBF0130L 30V 1A SCH SOD323F SMT
D60	7617	BZX84C15LT1 15V0 0W225 ZEN SOT23
D61	7617	BZX84C15LT1 15V0 0W225 ZEN SOT23
D62	7750	CDSF4148 75V 0A15 1005 SMT
D201	6772	BRIDGE 25A 400V WIRE LEAD SIP
D203	6845	MUR1640CTG 400V 8A DIODE DUAL CC
D206	7848	MURA240T3 400V 2A DIO 403D SMT
D207	7848	MURA240T3 400V 2A DIO 403D SMT
D220	6843	MUR1620CTRG 200V 16A DIODE DUAL CA
HW1	9067	1/8X5/16XID.64 NYLON SPACER
HW2	9067	1/8X5/16XID.64 NYLON SPACER
HW3	9067	1/8X5/16XID.64 NYLON SPACER
HW4	9067	1/8X5/16XID.64 NYLON SPACER
HW5	9067	1/8X5/16XID.64 NYLON SPACER
HW6	9067	1/8X5/16XID.64 NYLON SPACER
HW7	9067	1/8X5/16XID.64 NYLON SPACER
HW8	9067	1/8X5/16XID.64 NYLON SPACER
HW11	8607	3/16X1/8X.06ID NYLON SPACER
HW12	8607	3/16X1/8X.06ID NYLON SPACER
HW13	8607	3/16X1/8X.06ID NYLON SPACER
HW14	8607	3/16X1/8X.06ID NYLON SPACER
HW15	8607	3/16X1/8X.06ID NYLON SPACER
K1	3105	RELAY 1C 10AMP DC12 030MA PC-C
L1	7732	220.0UH COIL SMT
L2	2910	120.0UH COIL SR4018T 1R6 SMT
L3	6672	64UH CHOKE 68T20AWG/T157-2 PCBMNT
L4	2910	120.0UH COIL SR4018T 1R6 SMT
L5	6672	64UH CHOKE 68T20AWG/T157-2 PCBMNT
L7	8108	120UH COIL 0R4 10MMSQ SMT
L8	7941	8.2UH COIL 1210 SMT
L9	6507	3.3MH COIL COMMON MODE 5A
L10	6507	3.3MH COIL COMMON MODE 5A
L11	2910	120.0UH COIL SR4018T 1R6 SMT
L12	7732	220.0UH COIL SMT
L13	2910	120.0UH COIL SR4018T 1R6 SMT
L204	3109	25UH COIL E44 FERR 14T 19AWG LITZ
L219	7974	1000UH 10% COIL 12MM SMT
Q1	6972	IRFB4227PBF TO220 NCH MFET TM
Q2	6763	IRFI4020H-117P MFET HLFBRDG TO220-5
Q3	6972	IRFB4227PBF TO220 NCH MFET TM
Q4	7720	TL431A 3 TERM ADJ VREG SMT SOT-23
Q5	7837	MMBT5401 PNP SOT-23 SMT
Q8	7665	MMBT4401 NPN SOT-23 SMT
Q9	7806	MMBF4391LT1 NCH JFET SOT-23 SMT T&R
Q10	8107	FOD814A OPTO-COUPLER 4P SMT IC
Q11	6977	FDT3612 NCH MFET SOT-223 SMT
Q12	8165	MMBTA92 PNP SOT-23 SMT
Q13	7806	MMBF4391LT1 NCH JFET SOT-23 SMT T&R
Q16	7701	MMBTA14 NPN DARL SOT-23 SMT
Q17	7837	MMBT5401 PNP SOT-23 SMT
Q18	7665	MMBT4401 NPN SOT-23 SMT
Q19	8022	MMBTA64LT1G PNP DARL SOT-23 SMT
Q20	7701	MMBTA14 NPN DARL SOT-23 SMT
Q21	7665	MMBT4401 NPN SOT-23 SMT
Q22	7837	MMBT5401 PNP SOT-23 SMT
Q23	8022	MMBTA64LT1G PNP DARL SOT-23 SMT
Q24	7701	MMBTA14 NPN DARL SOT-23 SMT
Q25	7665	MMBT4401 NPN SOT-23 SMT
Q26	7837	MMBT5401 PNP SOT-23 SMT
Q27	8022	MMBTA64LT1G PNP DARL SOT-23 SMT
Q28	7665	MMBT4401 NPN SOT-23 SMT
Q29	7701	MMBTA14 NPN DARL SOT-23 SMT
Q30	7844	MJD243T4G NPN DPAK3 SMT TS
Q31	7845	MJD253T4G PNP DPAK3 SMT TS
Q32	7806	MMBF4391LT1 NCH JFET SOT-23 SMT T&R
Q33	7806	MMBF4391LT1 NCH JFET SOT-23 SMT T&R
Q34	7837	MMBT5401 PNP SOT-23 SMT
Q35	7665	MMBT4401 NPN SOT-23 SMT
Q206	6975	SPW35N60CFD MOSFET N-CN 600V TO-247
Q207	6975	SPW35N60CFD MOSFET N-CN 600V TO-247
R1	7679	W100 4K99 1% 0805 SMT RES
R2	7621	W100 1K0 1% 0805 SMT RES
R4	4985	W125 562K 1% 0805 SMT RES
R5	7621	W100 1K0 1% 0805 SMT RES
R6	7998	W750 0R 1% 2010 SMT JMP
R7	8094	1W00 33K 5% 2512 SMT RES
R8	8157	1W00 47K 5% 2512 SMT RES
R9	8095	1W00 10K 5% 2512 SMT RES
R10	8012	1W00 4R7 5% 2512 SMT RES
R11	7686	W100 274K 1% 0805 SMT RES
R12	7739	W250 1R 5% 1206 SMT RES
R13	7852	W250 10R 5% 1206 SMT RES
R14	8012	1W00 4R7 5% 2512 SMT RES
R15	8012	1W00 4R7 5% 2512 SMT RES
R16	7928	W125 10K00 0.1% 0805 SMT RES
R17	7634	W100 20K5 1% 0805 SMT RES
R18	7672	W125 348R0 1% 0805 SMT RES
R19	7627	W100 13K 1% 0805 SMT RES
R20	4974	W125 45K3 1% 0805 SMT RES
R21	8093	1W00 15K 5% 2512 SMT RES
R22	8153	W125 5K36 1% 0805 SMT RES
R23	7621	W100 1K0 1% 0805 SMT RES
R24	7621	W100 1K0 1% 0805 SMT RES
R26	4964	W125 68R1 1% 0805 SMT RES
R27	7624	W100 100R 1% 0805 SMT RES
R29	7852	W250 10R 5% 1206 SMT RES
R30	8012	1W00 4R7 5% 2512 SMT RES
R31	7625	W100 10K0 1% 0805 SMT RES
R32	7632	W100 2K32 1% 0805 SMT RES
R33	7621	W100 1K0 1% 0805 SMT RES
R34	7637	W125 3K32 1% 0805 SMT RES
R35	7637	W125 3K32 1% 0805 SMT RES
R36	7637	W125 3K32 1% 0805 SMT RES
R37	7928	W125 10K00 0.1% 0805 SMT RES
R48	7671	W125 249R0 1% 0805 SMT RES
R49	7679	W100 4K99 1% 0805 SMT RES
R50	7679	W100 4K99 1% 0805 SMT RES
R52	7670	W125 47R5 1% 0805 SMT RES
R53	8131	W500 10R 5% 1210 SMT RES
R54	7824	W125 47K5 1% 0805 SMT RES
R57	8131	W500 10R 5% 1210 SMT RES
R58	7679	W100 4K99 1% 0805 SMT RES
R59	7928	W125 10K00 0.1% 0805 SMT RES
R60	8094	1W00 33K 5% 2512 SMT RES
R61	4615	W250 4R7 5% 1206 SMT RES
R62	7930	W250 22R 5% 1206 SMT RES
R63	7930	W250 22R 5% 1206 SMT RES
R64	7679	W100 4K99 1% 0805 SMT RES
R65	7709	W100 301R 1% 0805 SMT RES
R66	7627	W100 13K 1% 0805 SMT RES
R67	7900	W125 30K 0.5% 0805 SMT RES
R68	8093	1W00 15K 5% 2512 SMT RES
R69	7928	W125 10K00 0.1% 0805 SMT RES
R70	7671	W125 249R0 1% 0805 SMT RES
R71	7621	W100 1K0 1% 0805 SMT RES
R72	4971	1W00 39K 5% 2512 SMT RES
R73	8094	1W00 33K 5% 2512 SMT RES
R74	7670	W125 47R5 1% 0805 SMT RES
R75	7651	W250 1M0 1% 1206 SMT RES
R76	8160	W125 91K 5% 0805 SMT RES
R77	7852	W250 10R 5% 1206 SMT RES
R78	8012	1W00 4R7 5% 2512 SMT RES
R79	7822	W100 7K50 1% 0805 SMT RES
R80	7621	W100 1K0 1% 0805 SMT RES
R82	7679	W100 4K99 1% 0805 SMT RES
R83	7928	W125 10K00 0.1% 0805 SMT RES
R84	7679	W100 4K99 1% 0805 SMT RES
R85	7675	W125 1K21 1% 0805 SMT RES
R86	7675	W125 1K21 1% 0805 SMT RES
R87	7630	W100 182K 1% 0805 SMT RES
R89	7998	W750 0R 1% 2010 SMT JMP
R90	7628	W100 15K0 1% 0805 SMT RES
R91	7821	W125 10R0 1% 0805 SMT RES
R92	7744	W250 4K7 5% 1206 SMT RES
R93	8137	W125 1K62 1% 0805 SMT RES
R94	7761	W100 12K1 1% 0603 SMT RES
R95	7679	W100 4K99 1% 0805 SMT RES
R97	7679	W100 4K99 1% 0805 SMT RES
R98	7928	W125 10K00 0.1% 0805 SMT RES
R99	7928	W125 10K00 0.1% 0805 SMT RES
R100	7679	W100 4K99 1% 0805 SMT RES
R101	8137	W125 1K62 1% 0805 SMT RES
R102	8137	W125 1K62 1% 0805 SMT RES
R105	7672	W125 348R0 1% 0805 SMT RES
R106	7633	W100 2K74 1% 0805 SMT RES
R109	7637	W125 3K32 1% 0805 SMT RES
R110	7637	W125 3K32 1% 0805 SMT RES
R113	7637	W125 3K32 1% 0805 SMT RES
R114	8189	W125 4K02 0.1% 0805 SMT RES
R115	7649	W125 1K50 1% 0805 SMT RES
R118	8183	1W00 2R0 1% 2512 SMT RES
R120	7852	W250 10R 5% 1206 SMT RES
R121	7824	W125 47K5 1% 0805 SMT RES
R122	7865	W125 150K 5% 0805 SMT RES
R123	7824	W125 47K5 1% 0805 SMT RES
R124	8008	W250 10K 5% ANTISURGE 0805 SMT RES
R125	8008	W250 10K 5% ANTISURGE 0805 SMT RES
R126	7632	W100 2K32 1% 0805 SMT RES
R127	7621	W100 1K0 1% 0805 SMT RES
R128	7621	W100 1K0 1% 0805 SMT RES
R129	7632	W100 2K32 1% 0805 SMT RES
R130	7824	W125 47K5 1% 0805 SMT RES
R131	8160	W125 91K 5% 0805 SMT RES
R132	7622	W100 1M0 1% 0805 SMT RES
R133	4971	1W00 39K 5% 2512 SMT RES
R135	7637	W125 3K32 1% 0805 SMT RES
R136	7639	W100 357K 1% 0805 SMT RES
R137	7672	W125 348R0 1% 0805 SMT RES
R138	7621	W100 1K0 1% 0805 SMT RES
R139	7744	W250 4K7 5% 1206 SMT RES
R140	7727	W100 4R7 5% 0805 SMT RES
R141	7821	W125 10R0 1% 0805 SMT RES
R142	7672	W125 348R0 1% 0805 SMT RES
R143	7672	W125 348R0 1% 0805 SMT RES
R144	7821	W125 10R0 1% 0805 SMT RES
R145	4985	W125 562K 1% 0805 SMT RES
R146	8051	W125 68K 5% 0805 SMT RES
R147	7621	W100 1K0 1% 0805 SMT RES

M1522 PG2 Parts Reference List 7/4/2018

REF	YS #	Description
R148	8153	W125 5K36 1% 0805 SMT RES
R149	8131	W500 10R 5% 1210 SMT RES
R150	8131	W500 10R 5% 1210 SMT RES
R151	7626	W100 100K0 1% 0805 SMT RES
R152	7624	W100 100R 1% 0805 SMT RES
R153	7820	W100 499R 1% 0805 SMT RES
R154	7820	W100 499R 1% 0805 SMT RES
R155	7621	W100 1K0 1% 0805 SMT RES
R156	7621	W100 1K0 1% 0805 SMT RES
R157	7637	W125 3K32 1% 0805 SMT RES
R158	7745	W125 0R 5% 0805 SMT RES
R159	7675	W125 1K21 1% 0805 SMT RES
R160	7626	W100 100K0 1% 0805 SMT RES
R161	8095	1W00 10K 5% 2512 SMT RES
R162	7852	W250 10R 5% 1206 SMT RES
R163	7624	W100 100R 1% 0805 SMT RES
R164	7739	W250 1R 5% 1206 SMT RES
R165	7628	W100 15K0 1% 0805 SMT RES
R166	8137	W125 1K62 1% 0805 SMT RES
R167	7634	W100 20K5 1% 0805 SMT RES
R168	7624	W100 100R 1% 0805 SMT RES
R169	7637	W125 3K32 1% 0805 SMT RES
R171	4995	W125 14K0 1% 0805 SMT RES
R172	7852	W250 10R 5% 1206 SMT RES
R173	7821	W125 10R0 1% 0805 SMT RES
R174	7672	W125 348R0 1% 0805 SMT RES
R175	8160	W125 91K 5% 0805 SMT RES
R176	7759	W250 100K 5% 1206 SMT RES
R177	7759	W250 100K 5% 1206 SMT RES
R178	8160	W125 91K 5% 0805 SMT RES
R179	7821	W125 10R0 1% 0805 SMT RES
R180	7821	W125 10R0 1% 0805 SMT RES
R181	7672	W125 348R0 1% 0805 SMT RES
R182	7821	W125 10R0 1% 0805 SMT RES
R183	8160	W125 91K 5% 0805 SMT RES
R184	8160	W125 91K 5% 0805 SMT RES
R185	7821	W125 10R0 1% 0805 SMT RES
R186	7821	W125 10R0 1% 0805 SMT RES
R187	7821	W125 10R0 1% 0805 SMT RES
R188	7821	W125 10R0 1% 0805 SMT RES
R189	7672	W125 348R0 1% 0805 SMT RES
R190	8137	W125 1K62 1% 0805 SMT RES
R191	8137	W125 1K62 1% 0805 SMT RES
R192	7759	W250 100K 5% 1206 SMT RES
R193	7759	W250 100K 5% 1206 SMT RES
R194	7759	W250 100K 5% 1206 SMT RES
R195	7759	W250 100K 5% 1206 SMT RES
R200	7900	W125 30K 0.5% 0805 SMT RES
R201	4966	W125 40K2 1% 0805 SMT RES
R202	7626	W100 100K0 1% 0805 SMT RES
R203	7630	W100 182K 1% 0805 SMT RES
R204	7625	W100 10K0 1% 0805 SMT RES
R205	7621	W100 1K0 1% 0805 SMT RES
R206	7634	W100 20K5 1% 0805 SMT RES
R207	7928	W125 10K00 0.1% 0805 SMT RES
R208	7670	W125 47R5 1% 0805 SMT RES
R209	7634	W100 20K5 1% 0805 SMT RES
R210	8051	W125 68K 5% 0805 SMT RES
R211	7928	W125 10K00 0.1% 0805 SMT RES
R212	4966	W125 40K2 1% 0805 SMT RES
R213	7822	W100 7K50 1% 0805 SMT RES
R214	7623	W125 1M50 1% 0805 SMT RES
R215	7635	W100 221R 1% 0805 SMT RES
R216	6622	10R 20% THERMISTOR NTC
R217	8008	W250 10K 5% ANTISURGE 0805 SMT RES
R218	7634	W100 20K5 1% 0805 SMT RES
R219	7621	W100 1K0 1% 0805 SMT RES
R220	8182	W125 22K 5% 0805 SMT RES
R222	7822	W100 7K50 1% 0805 SMT RES
R223	7622	W100 1M0 1% 0805 SMT RES
R224	7635	W100 221R 1% 0805 SMT RES
R225	7865	W125 150K 5% 0805 SMT RES
R226	8189	W125 4K02 0.1% 0805 SMT RES
R227	8228	W125 75K 1% 0805 SMT RES
R228	7865	W125 150K 5% 0805 SMT RES
R229	7681	W125 8K25 1% 0805 SMT RES
R230	8189	W125 4K02 0.1% 0805 SMT RES
R231	7634	W100 20K5 1% 0805 SMT RES
R232	5074	W125 41K2 1% 0805 SMT RES
R233	7626	W100 100K0 1% 0805 SMT RES
R234	7626	W100 100K0 1% 0805 SMT RES
R235	7865	W125 150K 5% 0805 SMT RES
R236	8189	W125 4K02 0.1% 0805 SMT RES
R237	8228	W125 75K 1% 0805 SMT RES
R238	7634	W100 20K5 1% 0805 SMT RES
R239	7681	W125 8K25 1% 0805 SMT RES
R240	7682	W125 17K8 1% 0805 SMT RES
R241	7796	W063 1K37 1% 0603 SMT RES
R242	7673	W100 475R 1% 0805 SMT RES
R243	7865	W125 150K 5% 0805 SMT RES
R244	8189	W125 4K02 0.1% 0805 SMT RES
R245	7626	W100 100K0 1% 0805 SMT RES
R246	4966	W125 40K2 1% 0805 SMT RES
R247	5000	W125 140K 1% 0805 SMT RES
R248	7646	W125 681R 1% 0805 SMT RES
R249	7622	W100 1M0 1% 0805 SMT RES
R250	7629	W125 150K0 1% 0805 SMT RES
R251	7820	W100 499R 1% 0805 SMT RES
R252	7820	W100 499R 1% 0805 SMT RES
R253	7626	W100 100K0 1% 0805 SMT RES
R254	7626	W100 100K0 1% 0805 SMT RES
R255	8182	W125 22K 5% 0805 SMT RES
R256	8199	W125 34K0 1% 0805 SMT RES
R257	8228	W125 75K 1% 0805 SMT RES
R258	8199	W125 34K0 1% 0805 SMT RES
R259	8228	W125 75K 1% 0805 SMT RES
R260	7628	W100 15K0 1% 0805 SMT RES
R262	4974	W125 45K3 1% 0805 SMT RES
R263	7852	W250 10R 5% 1206 SMT RES
R265	7759	W250 100K 5% 1206 SMT RES
R266	7759	W250 100K 5% 1206 SMT RES
R267	7626	W100 100K0 1% 0805 SMT RES
R268	7626	W100 100K0 1% 0805 SMT RES
R269	8189	W125 4K02 0.1% 0805 SMT RES
R270	5061	W125 2K87 1% 0805 SMT RES
R271	7679	W100 4K99 1% 0805 SMT RES
R272	6619	10K 5% THERMISTOR VISH NTC
R273	8189	W125 4K02 0.1% 0805 SMT RES
R274	8189	W125 4K02 0.1% 0805 SMT RES
R275	8321	W125 8K66 1% 0805 SMT RES
R276	8189	W125 4K02 0.1% 0805 SMT RES
R277	7852	W250 10R 5% 1206 SMT RES
R278	7626	W100 100K0 1% 0805 SMT RES
R279	7626	W100 100K0 1% 0805 SMT RES
R280	7639	W100 357K 1% 0805 SMT RES
R281	7624	W100 100R 1% 0805 SMT RES
R282	7672	W125 348R0 1% 0805 SMT RES
R283	8008	W250 10K 5% ANTISURGE 0805 SMT RES
R284	8157	1W00 47K 5% 2512 SMT RES
R285	8157	1W00 47K 5% 2512 SMT RES
R288	7636	W100 27K4 1% 0805 SMT RES
R292	7759	W250 100K 5% 1206 SMT RES
R293	7759	W250 100K 5% 1206 SMT RES
SHLD1	1667	PSAMP TRANSISTOR SHIELD PAD
SHLD2	1668	PSAMP EMI SHIELD CASE
T1	1249	XFMR O/P 400W PQ40/40 PS10,12,15P
T2	8188	XF3955 GATE DRIVE XFMR SMT
T3	8188	XF3955 GATE DRIVE XFMR SMT
TP1	8002	TEST POINT MINIATURE SMT
TP2	8002	TEST POINT MINIATURE SMT
TP3	8002	TEST POINT MINIATURE SMT
TP4	8002	TEST POINT MINIATURE SMT
TP5	8002	TEST POINT MINIATURE SMT
TP7	8002	TEST POINT MINIATURE SMT
TP8	8002	TEST POINT MINIATURE SMT
TP9	8002	TEST POINT MINIATURE SMT
TP10	8002	TEST POINT MINIATURE SMT
TP11	8002	TEST POINT MINIATURE SMT
TP12	8002	TEST POINT MINIATURE SMT
TP13	8002	TEST POINT MINIATURE SMT
TP14	8002	TEST POINT MINIATURE SMT
TP15	8002	TEST POINT MINIATURE SMT
TP16	8002	TEST POINT MINIATURE SMT
TP17	8002	TEST POINT MINIATURE SMT
TP18	8002	TEST POINT MINIATURE SMT
TP19	8002	TEST POINT MINIATURE SMT
TP21	8002	TEST POINT MINIATURE SMT
U1	7949	ZXGD3002E6 GATE DRVR 9A SMT SOT326
U2	6666	LM5008A 100V REG 0A35 BUCK SW SMT
U3	7949	ZXGD3002E6 GATE DRVR 9A SMT SOT326
U5	7884	IRS20957S DIG AUDIO DRVR SMT SOIC
U6	8107	FOD814A OPTO-COUPLER 4P SMT IC
U10	6767	AD825 HS OPAMP JFET SO-8 SMT
U11	8121	CNY17F-2S OPTO-COUPLER 6P SMT IC
U12	7668	MC33079D QUAD OPAMP SMT SO14
U13	7668	MC33079D QUAD OPAMP SMT SO14
U14	7884	IRS20957S DIG AUDIO DRVR SMT SOIC
U16	8124	TLV3201 SNGLE COMPARATOR SMT SOT235
U17	7993	TL071CDR OPAMP JFET 3MHZ SO-8 SMT
U18	7812	SN74AHC1G86 SINGLE XOR SMT SOT235
U19	6652	MIC4424YM DUAL MOSFET DRVR SMT S08
U20	6652	MIC4424YM DUAL MOSFET DRVR SMT S08
U21	6666	LM5008A 100V REG 0A35 BUCK SW SMT
U22	6652	MIC4424YM DUAL MOSFET DRVR SMT S08
U23	6651	LM5020-2 CURR MOD PWM SMT IC SSOP10
U24	7659	LM339M QUAD SS COMP SMT SO-14
U25	7661	LM393D DUAL COMPARATOR SMT SO-8
U26	7661	LM393D DUAL COMPARATOR SMT SO-8
U27	7661	LM393D DUAL COMPARATOR SMT SO-8
U202	8158	LNK306G OFFLINE SWITCH SMT SMD8B
U205	7987	UCC25600 RES MODE CTRL SMT SO8
W1	4208	10 CIR SOCKT DIL RA 0.1
W2	4167	2X2PIN 4.2MM RA HEADER VAL-U-LOK
W201	4146	3 PIN POWER PIN HEADER MALE POLZED
ZD3	7973	BAS316 100V 0A25 DIODE SOD323 SMT
ZD201	8159	SMAZ18-13-F 18V0 1W0 5% SMT ZEN

M1523 Parts Reference List 5/17/2016

REF	YS #	Description	REF	YS #	Description	REF	YS #	Description	REF	YS #	Description	REF	YS #	Description
C1		470P 50V 5%CAP 0603 SMT NPO	D5		CDSF4148 75V 0A15 1005 SMT	R58		W100 100R 1% 0805 SMT RES						
C2		470P 50V 5%CAP 0603 SMT NPO	D6		MBRA340T3 40V 3A SHTKY 403D SMT	R62		W125 470R 5% 0805 SMT RES						
C3		100N 25V 10%CAP 0805 SMT X7R	D7		MM3Z18VT1G 18V0 0W2 5% SMT ZEN	R63		W125 470R 5% 0805 SMT RES						
C4		100N 25V 10%CAP 0805 SMT X7R	D8		CDSF4148 75V 0A15 1005 SMT	R64		W125 1K02 0.1% 0805 SMT RES						
C5		2N7 100V 10%CAP 0805 SMT X7R	D9		CDSF4148 75V 0A15 1005 SMT	R65		W100 18K2 1% 0805 SMT RES						
C6		2N7 100V 10%CAP 0805 SMT X7R	D10		CDSF4148 75V 0A15 1005 SMT	R66		W125 470R 5% 0805 SMT RES						
C7		22U 25V 20%CAP 1210 SMT X7R	D11		CDSF4148 75V 0A15 1005 SMT	R67		W125 470R 5% 0805 SMT RES						
C8		22U 25V 20%CAP 1210 SMT X7R	D12		CDSF4148 75V 0A15 1005 SMT	R68		W125 10K 5% 0805 SMT RES						
C9		10U 10V 10%CAP 1206 SMT X5R	D13		CDSF4148 75V 0A15 1005 SMT	R69		W125 470R 5% 0805 SMT RES						
C10		10U 10V 10%CAP 1206 SMT X5R	D14		MMBZ5231B 5V1 0W35 5% SMT ZEN	R70		W100 2K74 1% 0805 SMT RES						
C11		10U 10V 10%CAP 1206 SMT X5R	D15		MMBZ5231B 5V1 0W35 5% SMT ZEN	R71		W100 2K74 1% 0805 SMT RES						
C12		10U 10V 10%CAP 1206 SMT X5R	D16		SMAJ150CA 150V 400W BIDIR SMT	R72		W125 1K02 0.1% 0805 SMT RES						
C13		10U 10V 10%CAP 1206 SMT X5R	D17		MM3Z18VT1G 18V0 0W2 5% SMT ZEN	R73		W125 1K02 0.1% 0805 SMT RES						
C14		100N 16V 10%CAP 0603 SMT X7R	D18		MM3Z18VT1G 18V0 0W2 5% SMT ZEN	R74		W125 1K02 0.1% 0805 SMT RES						
C15		15P 50V 5%CAP 0603 SMT NPO	J1	4090	1/4IN &XLR PCB MT VERT COMBO NCJ6-V	R75		W125 1K02 0.1% 0805 SMT RES						
C17		100N 25V 10%CAP 0805 SMT X7R	J2	4100	XLR MALE PCB MT VERT	R76		W100 20K5 1% 0805 SMT RES						
C18		100N 16V 10%CAP 0603 SMT X7R	J4	4063	1/4IN ISO JCK PCMT VT STER RT SWT	R77		W125 10K 5% 0805 SMT RES						
C19		100N 25V 10%CAP 0805 SMT X7R	J5	3466	RCA DUAL PCB MT VERT GOLD 24MM	R78		W125 10K 5% 0805 SMT RES						
C20		82N 100V 10%CAP 0805 SMT X7R	J6	4010	XLR FEML PCB MT VERT 24MM AA-SERIES	R79		W125 10K 5% 0805 SMT RES						
C21		100N 25V 10%CAP 0805 SMT X7R	K1	3696	RELAY 1C 02AMP DC24 006MA PC-S	R80		W125 330R 0.5% 0805 SMT RES						
C22		82N 100V 10%CAP 0805 SMT X7R	L1		120.0UH COIL A34 1R6 SMT	R88		W125 1K02 0.1% 0805 SMT RES						
C23		100N 16V 10%CAP 0603 SMT X7R	L3		8.2UH COIL 1210 SMT	R89		W125 330R 0.5% 0805 SMT RES						
C24		82N 100V 10%CAP 0805 SMT X7R	LD1	6405	RED 3MM LED 2V1 20MA DIFFUSD	R90		W125 1K02 0.1% 0805 SMT RES						
C25		2N7 100V 10%CAP 0805 SMT X7R	LD2	6400	YEL 3MM LED 2V1 20MA DIFFUSD	R91		W100 18K2 1% 0805 SMT RES						
C26		1N5 50V 5%CAP 0805 SMT NPO	LD3	6408	GRN 3MM LED 2V2 20MA DIFFUSD	R92		W125 1K02 0.1% 0805 SMT RES						
C27		47P 50V 5%CAP 0805 SMT NPO	P1	4459	10K B LIN 9MM DET HI TORQ P32	R94		W125 10K 5% 0805 SMT RES						
C28		68N 50V 5%CAP 0805 SMT X7R	P2	4459	10K B LIN 9MM DET HI TORQ P32	R95		W125 33K 5% 0805 SMT RES						
C29		22U 25V 20%CAP 1210 SMT X7R	P3	4459	10K B LIN 9MM DET HI TORQ P32	R96		W063 10R 5% 0603 SMT RES						
C30		470P 50V 5%CAP 0603 SMT NPO	Q1		MMBT5401 PNP SOT-23 SMT	R97		W125 10K 5% 0805 SMT RES						
C31		100N 25V 10%CAP 0805 SMT X7R	Q5		12.288MHZ CRYSTAL 4-PIN SMT	R98		W125 10K 5% 0805 SMT RES						
C32		100N 25V 10%CAP 0805 SMT X7R	Q8		MMBT3906LT1 PNP SOT-23 SMT T&R	R99		W125 10K 5% 0805 SMT RES						
C33		100N 25V 10%CAP 0805 SMT X7R	R1		W125 10K 5% 0805 SMT RES	R100		W125 10K 5% 0805 SMT RES						
C34		100N 25V 10%CAP 0805 SMT X7R	R2		W125 470R 5% 0805 SMT RES	R101	6543	48R 265V RESETTABLE THERMISTOR PTC						
C35		10N 50V 5%CAP 1206 SMT NPO	R3		W125 470R 5% 0805 SMT RES	R102		W125 2K2 5% 0805 SMT RES						
C36		100U 10V 20%CAP 3528 SMT TNT	R4		W125 1M 5% 0805 SMT RES	R103		W125 47R 5% 0805 SMT RES						
C37		22U 25V 20%CAP 1210 SMT X7R	R5		W125 1M 5% 0805 SMT RES	R105		W125 1K02 0.1% 0805 SMT RES						
C41		470P 50V 5%CAP 0603 SMT NPO	R6		W125 10K 5% 0805 SMT RES	R106		W125 330R 0.5% 0805 SMT RES						
C42		470P 50V 5%CAP 0603 SMT NPO	R7		W125 10K 5% 0805 SMT RES	S1	3522	DPDT MINI PC VERT SNP ALT						
C43		680P 50V 5%CAP SMT C0G	R8		W125 1K800 0.1% 0805 SMT RES	S8	3522	DPDT MINI PC VERT SNP ALT						
C44		680P 50V 5%CAP SMT C0G	R9		W125 1K800 0.1% 0805 SMT RES	S9	3522	DPDT MINI PC VERT SNP ALT						
C45		22U 25V 20%CAP 1210 SMT X7R	R10		W125 1K02 0.1% 0805 SMT RES	U1		33078 DUAL OPAMP SMT SO-8						
C46		47P 50V 5%CAP 0805 SMT NPO	R11		W125 1K02 0.1% 0805 SMT RES	U2		33078 DUAL OPAMP SMT SO-8						
C47		47P 50V 5%CAP 0805 SMT NPO	R12		W100 4K99 1% 0805 SMT RES	U3		PCM1796 DAC STEREO DIFF SSOP28 SMT						
C48		82N 100V 10%CAP 0805 SMT X7R	R13		W063 10R 5% 0603 SMT RES	U5		LM1117 REGULATOR 5V0 SMT SOT223						
C49		100N 25V 10%CAP 0805 SMT X7R	R14		W125 100K 5% 0805 SMT RES	U6		LM2671 3V3 REG 0A5 SMT SO8						
C50		82N 100V 10%CAP 0805 SMT X7R	R15		W100 4K99 1% 0805 SMT RES	U7		MC9S08GT60 MICROCNTRLLER SMT QFP44						
C51		100N 25V 10%CAP 0805 SMT X7R	R16		W063 10R 5% 0603 SMT RES	U8		ADAU1701 28/56 DSP 2AD4DA SMT IC						
C52		47P 50V 5%CAP 0805 SMT NPO	R17		W063 10R 5% 0603 SMT RES	U9		MC33079D QUAD OPAMP SMT SO14						
C53		82N 100V 10%CAP 0805 SMT X7R	R18		W063 10R 5% 0603 SMT RES	U10		33078 DUAL OPAMP SMT SO-8						
C54		100N 25V 10%CAP 0805 SMT X7R	R19		W063 10R 5% 0603 SMT RES	U11		33078 DUAL OPAMP SMT SO-8						
C55		100N 25V 10%CAP 0805 SMT X7R	R20		W125 10K 5% 0805 SMT RES	U12		TL072 DUAL OPAMP SMT SO-8						
C56		1N5 50V 5%CAP 0805 SMT NPO	R23		W125 1K800 0.1% 0805 SMT RES	U13		33078 DUAL OPAMP SMT SO-8						
C57		15N 50V 5%CAP 0805 SMT C0G	R24		W125 10K 5% 0805 SMT RES	W2	4148	06 CIR DUAL ROW HDR VT 0.1						
C58		15N 50V 5%CAP 0805 SMT C0G	R25		W125 1K800 0.1% 0805 SMT RES	W3	4019	10 CIR SOCKT DIL VT 0.1						
C59		100N 16V 10%CAP 0603 SMT X7R	R26		W125 1K800 0.1% 0805 SMT RES									
C65		47P 50V 5%CAP 0805 SMT NPO	R27		W125 150K 5% 0805 SMT RES									
C66		100N 25V 10%CAP 0805 SMT X7R	R28		W100 2K0 1% 0805 SMT RES									
C67		100N 25V 10%CAP 0805 SMT X7R	R29		W125 1K800 0.1% 0805 SMT RES									
C68		100N 25V 10%CAP 0805 SMT X7R	R30		W100 2K0 1% 0805 SMT RES									
C69		1U 25V 20%CAP 1206 SMT X7R	R31		W063 10R 5% 0603 SMT RES									
C70		100N 25V 10%CAP 0805 SMT X7R	R32		W125 10K 5% 0805 SMT RES									
C71		270P 50V 5%CAP 0805 SMT NPO	R33		W125 1K02 0.1% 0805 SMT RES									
C72		15U 35V 10%CAP 6032 SMT TNT	R34		W125 10K 5% 0805 SMT RES									
C73		10U 10V 10%CAP 1206 SMT X5R	R35		W063 10R 5% 0603 SMT RES									
C74		100N 25V 10%CAP 0805 SMT X7R	R36		W125 10K 5% 0805 SMT RES									
C75		100N 16V 10%CAP 0603 SMT X7R	R37		W125 10K 5% 0805 SMT RES									
C76		100N 16V 10%CAP 0603 SMT X7R	R38		W100 2K74 1% 0805 SMT RES									
C77		10U 10V 10%CAP 1206 SMT X5R	R39		W100 2K74 1% 0805 SMT RES									
C78		100N 25V 10%CAP 0805 SMT X7R	R40		W125 1K02 0.1% 0805 SMT RES									
C79		100N 25V 10%CAP 0805 SMT X7R	R41		W125 33K 5% 0805 SMT RES									
C80		10U 10V 10%CAP 1206 SMT X5R	R42		W125 330R 0.5% 0805 SMT RES									
C81		100N 25V 10%CAP 0805 SMT X7R	R44		W100 2K74 1% 0805 SMT RES									
C82		3N3 25V 5%CAP 0805 SMT NPO	R46		W100 475R 1% 0805 SMT RES									
C83		100N 25V 10%CAP 0805 SMT X7R	R47		W100 200R 1% 0805 SMT RES									
C85		10U 10V 10%CAP 1206 SMT X5R	R52		W125 33K 5% 0805 SMT RES									
C86		10U 10V 10%CAP 1206 SMT X5R	R53		W125 33K 5% 0805 SMT RES									
C88		100N 16V 10%CAP 0603 SMT X7R	R54		W125 4K7 5% 0805 SMT RES									
C89		100N 16V 10%CAP 0603 SMT X7R	R55		W125 10K 5% 0805 SMT RES									
D1		CDSF4148 75V 0A15 1005 SMT	R56		W125 1K02 0.1% 0805 SMT RES									
D2		CDSF4148 75V 0A15 1005 SMT	R57		W125 10K 5% 0805 SMT RES									

M1525 Parts Reference List 5/17/2016

REF	YS #	Description	REF	YS #	Description	REF	YS #	Description	REF	YS #	Description	REF	YS #	Description
C100		100N 100V 10%CAP 1206 SMT X7R	D48		MBRS140 40V 1A 1W5 SCH SMT	R27		W250 100R 5% 1206 SMT RES	R135		W100 4K99 1% 0805 SMT RES	U18		TLV3201 SNGLE COMPARATOR SMT SOT235
C101		100N 100V 10%CAP 1206 SMT X7R	D49		SMBJ5371B 60V 5W0 DO214AA SMT ZEN	R28		W125 100K 5% 0805 SMT RES	R136		W100 357K 1% 0805 SMT RES	U21		LM5008A 100V REG 0A35 BUCK SW SMT
C102		100N 100V 10%CAP 1206 SMT X7R	D50		SMAZ10-13-F 10V0 1W0 10% SMT ZEN	R29		W250 10R 5% 1206 SMT RES	R137		W125 10R0 1% 0805 SMT RES	U202		LNK306G OFFLINE SWITCH SMT SMD8B
C103		_22U 20V 10%CAP 3528 SMT TANT	D51		ES1H 500V 1A0 D214 SMT SMC	R30		1W00 4R7 5% 2512 SMT RES	R138		W100 1K0 1% 0805 SMT RES	U205		UCC25600 RES MODE CTRL SMT SO8
C104		__4U7 50V 10%CAP 1210 SMT CER	D52		BAV21WS 200V 0A2 SOD323 SMT	R31		1W00 100K 5% 2512 SMT RES	R139		W125 681R 1% 0805 SMT RES	W2	4167	2X2PIN 4.2MM RA HEADER VAL-U-LOK
C105		__10N 50V 10%CAP 0805 SMT X7R	D53		BAV21WS 200V 0A2 SOD323 SMT	R32		W125 3K32 1% 0805 SMT RES	R140		W125 10R0 1% 0805 SMT RES	W8	4019	10 CIR SOCKT DIL VT 0.1
C106		__3N3 25V 5%CAP 0805 SMT NPO	D54		BAV21WS 200V 0A2 SOD323 SMT	R33		W100 1K0 1% 0805 SMT RES	R141		W125 10R0 1% 0805 SMT RES	W9	3966	GRN 16AWG PREFUSED WIRE
C107		__10N 50V 10%CAP 0805 SMT X7R	D55		BAV21WS 200V 0A2 SOD323 SMT	R34		W125 3K32 1% 0805 SMT RES	R142		W750 0R1 5% 2010 SMT TR	W201	4146	3 PIN POWER PIN HEADER MALE POLZED
C109		__4U7 50V 10%CAP 1210 SMT CER	D56		BAV21WS 200V 0A2 SOD323 SMT	R35		W125 3K32 1% 0805 SMT RES	R143		W750 0R1 5% 2010 SMT TR	W202	4162	2 PIN POWER PIN HEADER MALE POLZED
C110		__10N 50V 10%CAP 0805 SMT X7R	D201	6772	BRIDGE 25A 400V WIRE LEAD SIP	R36		W125 3K32 1% 0805 SMT RES	R144		W125 10R0 1% 0805 SMT RES	W203	4162	2 PIN POWER PIN HEADER MALE POLZED
C111		__4U7 50V 10%CAP 1210 SMT CER	D202		MURA240T3 400V 2A 403D SMT	R37		W125 10K00 0.1% 0805 SMT RES	R145		W100 274K 1% 0805 SMT RES	ZD3		BAS316 100V 0A25 DIODE SOD323 SMT
C112		__4U7 50V 10%CAP 1210 SMT CER	D203	6845	MUR1640CTG 400V 8A DIODE DUAL CC	R54		W250 1M0 1% 1206 SMT RES	R146		W125 68K 5% 0805 SMT RES	ZD201		SMAZ18-13-F 18V0 1W0 5% SMT ZEN
C113		__4U7 50V 10%CAP 1210 SMT CER	D204		MURA240T3 400V 2A 403D SMT	R59		W125 10K00 0.1% 0805 SMT RES	R147		W100 1K0 1% 0805 SMT RES			
C114		__4U7 50V 10%CAP 1210 SMT CER	D205		MURA240T3 400V 2A 403D SMT	R60		1W00 33K 5% 2512 SMT RES	R148		W125 5K36 1% 0805 SMT RES			
C115		__4U7 50V 10%CAP 1210 SMT CER	D206		MURA240T3 400V 2A 403D SMT	R61		1W00 4R7 5% 2512 SMT RES	R149		W100 1K0 1% 0805 SMT RES			
C116		__2N2 50V 10%CAP 0805 SMT X7R	D207		MURA240T3 400V 2A 403D SMT	R62		1W00 22R 5% 2512 SMT RES	R151		W125 47K5 1% 0805 SMT RES			
C117		__2N2 50V 10%CAP 0805 SMT X7R	D209		MURA240T3 400V 2A 403D SMT	R63		1W00 22R 5% 2512 SMT RES	R152		W125 100K 5% 0805 SMT RES			
C118		__10U 16V 10%CAP 0805 SMT X6	D210		MURA240T3 400V 2A 403D SMT	R64		1W00 1K 5% 2512 SMT RES	R201		W250 10R 5% 1206 SMT RES			
C201		220N 50V 10%CAP 1206 SMT X7R	D211		MURA240T3 400V 2A 403D SMT	R65		W100 301R 1% 0805 SMT RES	R202		W250 10R 5% 1206 SMT RES			
C202		__22U 20V 10%CAP 3528 SMT TANT	D214		MBRS140 40V 1A 1W5 SCH SMT	R66		W100 13K 1% 0805 SMT RES	R203		W250 10R 5% 1206 SMT RES			
C204		__1U0 50V 10%CAP 1206 SMT CER	D215		MBRS140 40V 1A 1W5 SCH SMT	R67		W125 47K5 1% 0805 SMT RES	R204		W250 10R 5% 1206 SMT RES			
C205		__82N 100V 10%CAP 0805 SMT X7R	D216		MBRS140 40V 1A 1W5 SCH SMT	R68		1W00 15K 5% 2512 SMT RES	R205		W250 10R 5% 1206 SMT RES			
C206		__82N 100V 10%CAP 0805 SMT X7R	D217		MBRS140 40V 1A 1W5 SCH SMT	R69		W125 10K00 0.1% 0805 SMT RES	R206		W250 10R 5% 1206 SMT RES			
C207	5635	1000U 35V 20%CAP BLK RADIAL ELECT	D220	6843	MUR1620CTRG 200V 16A DIODE DUAL CA	R70		W125 249R0 1% 0805 SMT RES	R207		1W00 47R 5% 2512 SMT RES			
C208	5635	1000U 35V 20%CAP BLK RADIAL ELECT	D226		BAV21WS 200V 0A2 SOD323 SMT	R71		W100 1K0 1% 0805 SMT RES	R208		W750 7R5 5% 2010 SMT RES			
C209	6545	__1N 250V 20%CAP BLK 'Y' 10MM AC	L1		1000UH COIL 6X6MM SMT	R72		1W00 1K 5% 2512 SMT RES	R209		1W00 47R 5% 2512 SMT RES			
C210	5972	680N 400V 5%CAP BLK RAD POLY FLM	L2		120.0UH COIL A34 1R6 SMT	R73		1W00 47K 5% 2512 SMT RES	R210		1W00 47R 5% 2512 SMT RES			
C211		220N 50V 10%CAP 1206 SMT X7R	L3	6620	__64UH CHOKE 68T20AWG/T157-2	R75		W250 1M0 1% 1206 SMT RES	R211		W250 10R 5% 1206 SMT RES			
C212		_82N 100V 10%CAP 0805 SMT X7R	L4		120.0UH COIL A34 1R6 SMT	R76		W100 4K75 1% 0805 SMT RES	R212		W250 10R 5% 1206 SMT RES			
C213	6545	__1N 250V 20%CAP BLK 'Y' 10MM AC	L5	6620	__64UH CHOKE 68T20AWG/T157-2	R77		W250 10R 5% 1206 SMT RES	R213		W250 10R 5% 1206 SMT RES			
C214	6545	__1N 250V 20%CAP BLK 'Y' 10MM AC	L7		220UH COIL 10X10MM SMT	R78		1W00 4R7 5% 2512 SMT RES	R214		W250 10R 5% 1206 SMT RES			
C215	5663	1200U 200V 20%CAP BLK 25X40MM	L8		120.0UH COIL A34 1R6 SMT	R79		W125 100K 5% 0805 SMT RES	R216	6633	__2R5 25% 5A INRSH CURR LIM 12MM			
C216	5663	1200U 200V 20%CAP BLK 25X40MM	L9		120.0UH COIL A34 1R6 SMT	R80		W100 1K0 1% 0805 SMT RES	R217	6633	__2R5 25% 5A INRSH CURR LIM 12MM			
C220		100N 25V 10%CAP 0805 SMT X7R	L10		120.0UH COIL A34 1R6 SMT	R81		W125 10K00 0.1% 0805 SMT RES	R240		W100 7K50 1% 0805 SMT RES			
C221		__4U7 50V 10%CAP 1210 SMT CER	L11		120.0UH COIL A34 1R6 SMT	R82		W125 4K02 0.1% 0805 SMT RES	R241		W100 1K0 1% 0805 SMT RES			
C230	6545	__1N 250V 20%CAP BLK 'Y' 10MM AC	L203	4169	14.0MH COIL 4AMP INPUT COM MODE	R83		W125 1K800 0.1% 0805 SMT RES	R242		W125 348R0 1% 0805 SMT RES			
C231	5262	__1U 275V 20%CAP BLK 'X2'26.0MM AC	L205	4169	14.0MH COIL 4AMP INPUT COM MODE	R84		W125 4K02 0.1% 0805 SMT RES	R243		W250 1M0 1% 1206 SMT RES			
C232	5827	150N 250V 20%CAP BLK 'X2' 15MM AC	L219		1000UH 10% COIL 12MM SMT	R85		W125 1K21 1% 0805 SMT RES	R255		2W00 0R1 5% 2512 SMT RES			
C233	5827	150N 250V 20%CAP BLK 'X2' 15MM AC	PCB	M1525	PS10P ASSY PCB	R86		W125 1K21 1% 0805 SMT RES	R256		2W00 0R1 5% 2512 SMT RES			
C236		__1U0 50V 10%CAP 1206 SMT CER	Q1	6972	IRFB4227PBF TO220 NCH MFET TM	R87		W125 100K 5% 0805 SMT RES	R257		W125 249R0 1% 0805 SMT RES			
C237		_47N 100V 10%CAP 1206 SMT X7R	Q2	6763	IRFI4020H-117P MFET HLFBRDG TO220-5	R88		W125 1K50 1% 0805 SMT RES	R258		W100 1K0 1% 0805 SMT RES			
C239		__2N7 100V 10%CAP 0805 SMT X7R	Q3	6972	IRFB4227PBF TO220 NCH MFET TM	R89		W750 0R 1% 2010 SMT JMP	R259		W100 475R 1% 0805 SMT RES			
C243		100N 25V 10%CAP 0805 SMT X7R	Q5		ZXTN19020CFFNPN SOT23F SMT	R92		W125 10R0 1% 0805 SMT RES	R260		2W00 0R1 5% 2512 SMT RES			
C244		100N 25V 10%CAP 0805 SMT X7R	Q8		MMBT4401 NPN SOT-23 SMT	R93		W125 1K62 1% 0805 SMT RES	R263		W250 10R 5% 1206 SMT RES			
D1		MMBZ5231B 5V1 0W35 5% SMT ZEN	Q9		MMBT4401 NPN SOT-23 SMT	R94		W100 13K 1% 0805 SMT RES	R271		W100 4K99 1% 0805 SMT RES			
D2		ES3D 200V 3A0 D214 SMT SMC	Q10		FOD814A OPTO-COUPLER 4P SMT IC	R95		W125 1K21 1% 0805 SMT RES	R272	6619	_10K 5% THERMISTOR VISH NTC			
D3		ES3D 200V 3A0 D214 SMT SMC	Q13		MMBT4401 NPN SOT-23 SMT	R96		W125 1K21 1% 0805 SMT RES	R277	7852	W250 10R 5% 1206 SMT RES			
D4		MURA240T3 400V 2A 403D SMT	Q14		LM2991SX NEG ADJ REG SMT TO263-5	R97		W100 2K32 1% 0805 SMT RES	T1	1226	XFMR O/P 400W PQ40/40 PS10,12,15P			
D5		BAV21WS 200V 0A2 SOD323 SMT	Q201		ZXTN19020CFFNPN SOT23F SMT	R98		W100 4K99 1% 0805 SMT RES	T201		78602/9C PULSE XFMR SMT			
D6		BAV21WS 200V 0A2 SOD323 SMT	Q202		ZXTP19020CFFPNP SOT23F SMT	R99		W100 4K99 1% 0805 SMT RES	TP1		TEST POINT MINIATURE SMT			
D7		BAV21WS 200V 0A2 SOD323 SMT	Q203		ZXTP19020CFFPNP SOT23F SMT	R100		W100 2K32 1% 0805 SMT RES	TP2		TEST POINT MINIATURE SMT			
D8		BAV21WS 200V 0A2 SOD323 SMT	Q204		MMBT4401 NPN SOT-23 SMT	R101		W125 1K62 1% 0805 SMT RES	TP3		TEST POINT MINIATURE SMT			
D9		MMBZ5231B 5V1 0W35 5% SMT ZEN	Q205		ZXTN19020CFFNPN SOT23F SMT	R102		W125 1K62 1% 0805 SMT RES	TP4		TEST POINT MINIATURE SMT			
D10		MMBZ5231B 5V1 0W35 5% SMT ZEN	Q206	6975	SPW35N60CFD MOSFET N-CN 600V TO-247	R103		W125 348R0 1% 0805 SMT RES	TP5		TEST POINT MINIATURE SMT			
D20		ES3D 200V 3A0 D214 SMT SMC	Q207	6975	SPW35N60CFD MOSFET N-CN 600V TO-247	R104		W125 348R0 1% 0805 SMT RES	TP6		TEST POINT MINIATURE SMT			
D21		ES3D 200V 3A0 D214 SMT SMC	R1		W100 4K99 1% 0805 SMT RES	R105		W100 4K75 1% 0805 SMT RES	TP7		TEST POINT MINIATURE SMT			
D22		MURA240T3 400V 2A 403D SMT	R2		W100 1K0 1% 0805 SMT RES	R106		W125 3K32 1% 0805 SMT RES	TP8		TEST POINT MINIATURE SMT			
D23		MMBZ5231B 5V1 0W35 5% SMT ZEN	R3		W125 1K50 1% 0805 SMT RES	R109		W125 3K32 1% 0805 SMT RES	TP9		TEST POINT MINIATURE SMT			
D24		BAV21WS 200V 0A2 SOD323 SMT	R4		W100 357K 1% 0805 SMT RES	R110		W125 1K800 0.1% 0805 SMT RES	TP10		TEST POINT MINIATURE SMT			
D25		BAV21WS 200V 0A2 SOD323 SMT	R5		W100 1K0 1% 0805 SMT RES	R113		W125 3K32 1% 0805 SMT RES	TP11		TEST POINT MINIATURE SMT			
D26		MMBZ5231B 5V1 0W35 5% SMT ZEN	R6		W750 0R 1% 2010 SMT JMP	R114		W125 4K12 1% 0805 SMT RES	TP12		TEST POINT MINIATURE SMT			
D27		BAV21WS 200V 0A2 SOD323 SMT	R7		1W00 33K 5% 2512 SMT RES	R115		W125 1K50 1% 0805 SMT RES	TP13		TEST POINT MINIATURE SMT			
D28		BAV21WS 200V 0A2 SOD323 SMT	R8		1W00 47K 5% 2512 SMT RES	R117		W750 0R 1% 2010 SMT JMP	TP14		TEST POINT MINIATURE SMT			
D29		SMAZ10-13-F 10V0 1W0 10% SMT ZEN	R9		1W00 10K 5% 2512 SMT RES	R118		W250 10R 5% 1206 SMT RES	TP201		TEST POINT MINIATURE SMT			
D30		SMAZ10-13-F 10V0 1W0 10% SMT ZEN	R10		1W00 4R7 5% 2512 SMT RES	R119		W250 10R 5% 1206 SMT RES	TP202		TEST POINT MINIATURE SMT			
D31		MMBZ5231B 5V1 0W35 5% SMT ZEN	R11		W100 274K 1% 0805 SMT RES	R120		W250 10R 5% 1206 SMT RES	TP205		TEST POINT MINIATURE SMT			
D32		BAV21WS 200V 0A2 SOD323 SMT	R12		W250 1R 5% 1206 SMT RES	R121		W100 4K75 1% 0805 SMT RES	TP206		TEST POINT MINIATURE SMT			
D34		BAV21WS 200V 0A2 SOD323 SMT	R13		W250 10R 5% 1206 SMT RES	R122		W125 10K00 0.1% 0805 SMT RES	U1		ZXGD3002E6 GATE DRVR 9A SMT SOT326			
D35		DFLZ5V1-7 5V1 1W0 5% SMT ZEN	R14		1W00 4R7 5% 2512 SMT RES	R123		1W00 47K 5% 2512 SMT RES	U2		LM5008A 100V REG 0A35 BUCK SW SMT			
D36		ES1H 500V 1A0 D214 SMT SMC	R15		1W00 4R7 5% 2512 SMT RES	R124		1W00 47K 5% 2512 SMT RES	U3		ZXGD3002E6 GATE DRVR 9A SMT SOT326			
D37		SMAZ10-13-F 10V0 1W0 10% SMT ZEN	R16		W125 1K800 0.1% 0805 SMT RES	R125		1W00 47K 5% 2512 SMT RES	U5		IRS20957S DIG AUDIO DRVR SMT SOIC			
D38		1SMB5948BT3 91V0 3W DIO SMT ZEN	R17		1W00 1K 5% 2512 SMT RES	R126		W100 2K32 1% 0805 SMT RES	U6		FOD817C OPTO-COUPLER 4P SMT IC			
D39		3SMAJ5932B 20V 3W0 DO214AC SMT ZEN	R18		W125 348R0 1% 0805 SMT RES	R127		W125 249R0 1% 0805 SMT RES	U10		TL071CDR OPAMP JFET 3MHZ SO-8 SMT			
D40		BAV21WS 200V 0A2 SOD323 SMT	R19		W100 13K 1% 0805 SMT RES	R128		1W00 47K 5% 2512 SMT RES	U11		CNY17F-2S OPTO-COUPLER 6P SMT IC			
D41		BAV21WS 200V 0A2 SOD323 SMT	R20		W125 91K 5% 0805 SMT RES	R129		W100 2K32 1% 0805 SMT RES	U12		33078 DUAL OPAMP SMT SO-8			
D43		MMBZ5231B 5V1 0W35 5% SMT ZEN	R21		1W00 15K 5% 2512 SMT RES	R130		W100 1K0 1% 0805 SMT RES	U13		33078 DUAL OPAMP SMT SO-8			
D44		DFLZ5V1-7 5V1 1W0 5% SMT ZEN	R22		W100 7K50 1% 0805 SMT RES	R131		W125 8K25 1% 0805 SMT RES	U14		IRS20957S DIG AUDIO DRVR SMT SOIC			
D45		MURA240T3 400V 2A 403D SMT	R23		W100 1K0 1% 0805 SMT RES	R132		W100 4K99 1% 0805 SMT RES	U15		SN74AHC1G86 SINGLE XOR SMT SOT235			
D46		DFLZ5V1-7 5V1 1W0 5% SMT ZEN	R24		W100 1K0 1% 0805 SMT RES	R133		W100 4K99 1% 0805 SMT RES	U16		TLV3201 SNGLE COMPARATOR SMT SOT235			
D47		MBRS140 40V 1A 1W5 SCH SMT	R25		1W00 1K 5% 2512 SMT RES	R134		W100 4K99 1% 0805 SMT RES	U17		TL071CDR OPAMP JFET 3MHZ SO-8 SMT			

M1527 PG1 Parts Reference List 7/4/2018

REF	YS #	Description
C1	7737	10N 50V 10%CAP 0805 SMT X7R
C2	7878	1U 25V 20%CAP 1206 SMT X7R
C3	8096	470N 100V 10%CAP 1206 SMT X7R
C4	7875	100N 100V 10%CAP 1206 SMT X7R
C5	7877	2U2 100V 20%CAP 1812 SMT X7R
C6	5979	100N 50V 5%CAP 0805 SMT X7R
C7	7878	1U 25V 20%CAP 1206 SMT X7R
C8	8088	10U 16V 10%CAP 0805 SMT X6S
C9	5665	1500U 100V 20%CAP BLK 22X35MM
C10	7876	2U2 200V 20%CAP 3025 SMT CER
C11	7877	2U2 100V 20%CAP 1812 SMT X7R
C12	7737	10N 50V 10%CAP 0805 SMT X7R
C13	7741	2N2 50V 10%CAP 0805 SMT X7R
C14	7741	2N2 50V 10%CAP 0805 SMT X7R
C15	5665	1500U 100V 20%CAP BLK 22X35MM
C16	7748	47P 100V 5%CAP 0805 SMT NPO
C17	8088	10U 16V 10%CAP 0805 SMT X6S
C18	7693	1N 50V 5%CAP 0805 SMT NPO
C19	8092	100N 450V 10%CAP 1206 SMT X7T
C20	7737	10N 50V 10%CAP 0805 SMT X7R
C21	5979	100N 50V 5%CAP 0805 SMT X7R
C22	7693	1N 50V 5%CAP 0805 SMT NPO
C23	5979	100N 50V 5%CAP 0805 SMT X7R
C24	7737	10N 50V 10%CAP 0805 SMT X7R
C25	8272	220P 100V 10%CAP 0805 SMT X7R
C26	7748	47P 100V 5%CAP 0805 SMT NPO
C27	7735	4U7 50V 10%CAP 1210 SMT CER
C28	7735	4U7 50V 10%CAP 1210 SMT CER
C29	8092	100N 450V 10%CAP 1206 SMT X7T
C30	7877	2U2 100V 20%CAP 1812 SMT X7R
C31	7878	1U 25V 20%CAP 1206 SMT X7R
C32	5840	22N 400V 10%CAP BLK RAD POLY FLM
C33	7878	1U 25V 20%CAP 1206 SMT X7R
C34	7694	3N3 25V 5%CAP 0805 SMT NPO
C35	8092	100N 450V 10%CAP 1206 SMT X7T
C36	7876	2U2 200V 20%CAP 3025 SMT CER
C37	7694	3N3 25V 5%CAP 0805 SMT NPO
C38	8092	100N 450V 10%CAP 1206 SMT X7T
C39	7799	5N6 50V 5%CAP 0805 SMT C0G
C40	7783	2N7 100V 10%CAP 0805 SMT C0G
C41	5979	100N 50V 5%CAP 0805 SMT X7R
C42	7748	47P 100V 5%CAP 0805 SMT NPO
C43	5979	100N 50V 5%CAP 0805 SMT X7R
C44	5979	100N 50V 5%CAP 0805 SMT X7R
C45	7878	1U 25V 20%CAP 1206 SMT X7R
C46	7878	1U 25V 20%CAP 1206 SMT X7R
C47	8272	220P 100V 10%CAP 0805 SMT X7R
C48	7748	47P 100V 5%CAP 0805 SMT NPO
C49	7811	100U 25V 20%CAP 8X5.4 SMT ELE
C50	7735	4U7 50V 10%CAP 1210 SMT CER
C51	5516	47N 2000V 10%CAP AXL POLYPROP BULK
C52	7735	4U7 50V 10%CAP 1210 SMT CER
C53	7735	4U7 50V 10%CAP 1210 SMT CER
C54	7735	4U7 50V 10%CAP 1210 SMT CER
C55	7877	2U2 100V 20%CAP 1812 SMT X7R
C56	7877	2U2 100V 20%CAP 1812 SMT X7R
C57	7878	1U 25V 20%CAP 1206 SMT X7R
C58	7878	1U 25V 20%CAP 1206 SMT X7R
C59	8092	100N 450V 10%CAP 1206 SMT X7T
C60	7878	1U 25V 20%CAP 1206 SMT X7R
C61	7876	2U2 200V 20%CAP 3025 SMT CER
C62	8092	100N 450V 10%CAP 1206 SMT X7T
C63	7878	1U 25V 20%CAP 1206 SMT X7R
C64	7741	2N2 50V 10%CAP 0805 SMT X7R
C65	7741	2N2 50V 10%CAP 0805 SMT X7R
C66	7748	47P 100V 5%CAP 0805 SMT NPO
C67	8088	10U 16V 10%CAP 0805 SMT X6S
C68	7741	2N2 50V 10%CAP 0805 SMT X7R
C69	7878	1U 25V 20%CAP 1206 SMT X7R
C70	7737	10N 50V 10%CAP 0805 SMT X7R
C71	7693	1N 50V 5%CAP 0805 SMT NPO
C72	7738	10U0 16V 10%CAP 1206 SMT X7R
C73	5979	100N 50V 5%CAP 0805 SMT X7R
C74	7748	47P 100V 5%CAP 0805 SMT NPO
C75	5979	100N 50V 5%CAP 0805 SMT X7R
C76	7734	1U0 50V 10%CAP 1206 SMT CER
C77	7877	2U2 100V 20%CAP 1812 SMT X7R
C78	7877	2U2 100V 20%CAP 1812 SMT X7R
C79	7737	10N 50V 10%CAP 0805 SMT X7R
C80	7878	1U 25V 20%CAP 1206 SMT X7R
C81	7741	2N2 50V 10%CAP 0805 SMT X7R
C82	7877	2U2 100V 20%CAP 1812 SMT X7R
C83	7875	100N 100V 10%CAP 1206 SMT X7R
C84	5980	10P 1000V 10%CAP 1206 SMT X7R
C85	8088	10U 16V 10%CAP 0805 SMT X6S
C86	5971	680N 250V 5% CAPBLK RAD POLY FLM
C87	5971	680N 250V 5% CAPBLK RAD POLY FLM
C88	5971	680N 250V 5% CAPBLK RAD POLY FLM
C89	7692	150P 50V 5%CAP 0805 SMT NPO
C90	7738	10U0 16V 10%CAP 1206 SMT X7R
C91	7878	1U 25V 20%CAP 1206 SMT X7R
C92	7697	22U 16V 5%CAP 5X5.5 SMT ELC
C93	7734	1U0 50V 10%CAP 1206 SMT CER
C94	7734	1U0 50V 10%CAP 1206 SMT CER
C95	7697	22U 16V 5%CAP 5X5.5 SMT ELC
C96	7877	2U2 100V 20%CAP 1812 SMT X7R
C97	7877	2U2 100V 20%CAP 1812 SMT X7R
C98	7741	2N2 50V 10%CAP 0805 SMT X7R
C99	7878	1U 25V 20%CAP 1206 SMT X7R
C100	7875	100N 100V 10%CAP 1206 SMT X7R
C101	7875	100N 100V 10%CAP 1206 SMT X7R
C102	7694	3N3 25V 5%CAP 0805 SMT NPO
C103	8010	33P 100V 5%CAP 0603 SMT C0G
C104	7877	2U2 100V 20%CAP 1812 SMT X7R
C105	8096	470N 100V 10%CAP 1206 SMT X7R
C106	7694	3N3 25V 5%CAP 0805 SMT NPO
C107	7737	10N 50V 10%CAP 0805 SMT X7R
C108	7735	4U7 50V 10%CAP 1210 SMT CER
C109	7735	4U7 50V 10%CAP 1210 SMT CER
C110	7737	10N 50V 10%CAP 0805 SMT X7R
C111	7927	100P 50V 10%CAP 0805 SMT NPO
C112	7735	4U7 50V 10%CAP 1210 SMT CER
C113	7927	100P 50V 10%CAP 0805 SMT NPO
C114	7693	1N 50V 5%CAP 0805 SMT NPO
C115	7735	4U7 50V 10%CAP 1210 SMT CER
C116	7693	1N 50V 5%CAP 0805 SMT NPO
C117	5979	100N 50V 5%CAP 0805 SMT X7R
C118	7737	10N 50V 10%CAP 0805 SMT X7R
C119	5665	1500U 100V 20%CAP BLK 22X35MM
C120	5665	1500U 100V 20%CAP BLK 22X35MM
C121	5665	1500U 100V 20%CAP BLK 22X35MM
C122	5665	1500U 100V 20%CAP BLK 22X35MM
C123	7735	4U7 50V 10%CAP 1210 SMT CER
C124	7735	4U7 50V 10%CAP 1210 SMT CER
C125	5840	22N 400V 10%CAP BLK RAD POLY FLM
C126	7737	10N 50V 10%CAP 0805 SMT X7R
C127	7875	100N 100V 10%CAP 1206 SMT X7R
C128	7693	1N 50V 5%CAP 0805 SMT NPO
C129	7694	3N3 25V 5%CAP 0805 SMT NPO
C130	7931	270P 50V 5%CAP 0805 SMT NPO
C131	7737	10N 50V 10%CAP 0805 SMT X7R
C132	7737	10N 50V 10%CAP 0805 SMT X7R
C133	8096	470N 100V 10%CAP 1206 SMT X7R
C134	7734	1U0 50V 10%CAP 1206 SMT CER
C135	7748	47P 100V 5%CAP 0805 SMT NPO
C136	7737	10N 50V 10%CAP 0805 SMT X7R
C137	7748	47P 100V 5%CAP 0805 SMT NPO
C138	7737	10N 50V 10%CAP 0805 SMT X7R
C139	7878	1U 25V 20%CAP 1206 SMT X7R
C140	7748	47P 100V 5%CAP 0805 SMT NPO
C141	7877	2U2 100V 20%CAP 1812 SMT X7R
C142	7799	5N6 50V 5%CAP 0805 SMT C0G
C143	7799	5N6 50V 5%CAP 0805 SMT C0G
C144	7734	1U0 50V 10%CAP 1206 SMT CER
C145	5979	100N 50V 5%CAP 0805 SMT X7R
C146	5979	100N 50V 5%CAP 0805 SMT X7R
C147	7878	1U 25V 20%CAP 1206 SMT X7R
C148	7878	1U 25V 20%CAP 1206 SMT X7R
C149	7878	1U 25V 20%CAP 1206 SMT X7R
C150	7878	1U 25V 20%CAP 1206 SMT X7R
C151	7878	1U 25V 20%CAP 1206 SMT X7R
C152	7878	1U 25V 20%CAP 1206 SMT X7R
C153	7735	4U7 50V 10%CAP 1210 SMT CER
C154	7735	4U7 50V 10%CAP 1210 SMT CER
C155	7878	1U 25V 20%CAP 1206 SMT X7R
C156	7878	1U 25V 20%CAP 1206 SMT X7R
C157	7878	1U 25V 20%CAP 1206 SMT X7R
C158	7878	1U 25V 20%CAP 1206 SMT X7R
C159	7878	1U 25V 20%CAP 1206 SMT X7R
C204	7734	1U0 50V 10%CAP 1206 SMT CER
C209	6545	1N 250V 20%CAP BLK 'Y' 10MM AC
C210	5972	680N 400V 5%CAP BLK RAD POLY FLM
C213	6545	1N 250V 20%CAP BLK 'Y' 10MM AC
C214	6545	1N 250V 20%CAP BLK 'Y' 10MM AC
C215	5666	330U 400V 20%CAP BLK 25X40MM
C216	5666	330U 400V 20%CAP BLK 25X40MM
C220	5979	100N 50V 5%CAP 0805 SMT X7R
C221	7735	4U7 50V 10%CAP 1210 SMT CER
C230	6545	1N 250V 20%CAP BLK 'Y' 10MM AC
C231	5262	1U 275V 20%CAP BLK 'X2'26.0MM AC
C232	5827	150N 250V 20%CAP BLK 'X2' 15MM AC
C233	5262	1U 275V 20%CAP BLK 'X2'26.0MM AC
C236	7734	1U0 50V 10%CAP 1206 SMT CER
C237	7601	220N 50V 10%CAP 1206 SMT X7R
C239	7737	10N 50V 10%CAP 0805 SMT X7R
C243	5979	100N 50V 5%CAP 0805 SMT X7R
C244	7738	10U0 16V 10%CAP 1206 SMT X7R
D1	8109	BAV21WS 200V 0A2 SOD323 SMT
D2	7889	ES3D 200V 3A0 D214 SMT SMC
D3	7889	ES3D 200V 3A0 D214 SMT SMC
D4	7848	MURA240T3 400V 2A DIO 403D SMT
D5	8109	BAV21WS 200V 0A2 SOD323 SMT
D6	8109	BAV21WS 200V 0A2 SOD323 SMT
D7	8109	BAV21WS 200V 0A2 SOD323 SMT
D8	7830	MM3Z12VT1G 12V0 0W2 5% SMT ZEN
D9	7914	MMBZ5231B 5V1 0W35 5% SMT ZEN
D10	7830	MM3Z12VT1G 12V0 0W2 5% SMT ZEN
D11	7889	ES3D 200V 3A0 D214 SMT SMC
D12	7889	ES3D 200V 3A0 D214 SMT SMC
D13	7848	MURA240T3 400V 2A DIO 403D SMT
D14	7830	MM3Z12VT1G 12V0 0W2 5% SMT ZEN
D15	8109	BAV21WS 200V 0A2 SOD323 SMT
D16	8109	BAV21WS 200V 0A2 SOD323 SMT
D17	7830	MM3Z12VT1G 12V0 0W2 5% SMT ZEN
D18	8076	MMSZ4690T1G 5V6 0W5 5% SMT ZEN
D19	7830	MM3Z12VT1G 12V0 0W2 5% SMT ZEN
D20	7889	ES3D 200V 3A0 D214 SMT SMC
D21	7889	ES3D 200V 3A0 D214 SMT SMC
D22	7848	MURA240T3 400V 2A DIO 403D SMT
D23	7830	MM3Z12VT1G 12V0 0W2 5% SMT ZEN
D24	8109	BAV21WS 200V 0A2 SOD323 SMT
D25	8109	BAV21WS 200V 0A2 SOD323 SMT
D26	8185	SMBJ5371B 60V 5W0 DO214AA SMT ZEN
D27	8109	BAV21WS 200V 0A2 SOD323 SMT
D28	8109	BAV21WS 200V 0A2 SOD323 SMT
D29	7996	SMAZ10-13-F 10V0 1W0 10% SMT ZEN
D30	7996	SMAZ10-13-F 10V0 1W0 10% SMT ZEN
D31	8185	SMBJ5371B 60V 5W0 DO214AA SMT ZEN
D32	8109	BAV21WS 200V 0A2 SOD323 SMT
D33	8109	BAV21WS 200V 0A2 SOD323 SMT
D34	8109	BAV21WS 200V 0A2 SOD323 SMT
D35	7965	DFLZ5V1-7 5V1 1W0 5% SMT ZEN
D36	8085	ES1H 500V 1A0 D214 UPGT 8814
D37	7996	SMAZ10-13-F 10V0 1W0 10% SMT ZEN
D39	7848	MURA240T3 400V 2A DIO 403D SMT
D40	8109	BAV21WS 200V 0A2 SOD323 SMT
D41	8109	BAV21WS 200V 0A2 SOD323 SMT
D42	8109	BAV21WS 200V 0A2 SOD323 SMT
D43	7914	MMBZ5231B 5V1 0W35 5% SMT ZEN
D44	7750	CDSF4148 75V 0A15 1005 SMT
D45	7830	MM3Z12VT1G 12V0 0W2 5% SMT ZEN
D46	7914	MMBZ5231B 5V1 0W35 5% SMT ZEN
D47	6649	CDBF0130L 30V 1A SCH SOD323F SMT
D48	7973	BAS316 100V 0A25 DIODE SOD323 SMT
D50	7750	CDSF4148 75V 0A15 1005 SMT
D51	7750	CDSF4148 75V 0A15 1005 SMT
D52	8109	BAV21WS 200V 0A2 SOD323 SMT
D53	7750	CDSF4148 75V 0A15 1005 SMT
D54	8109	BAV21WS 200V 0A2 SOD323 SMT
D55	7750	CDSF4148 75V 0A15 1005 SMT
D57	6649	CDBF0130L 30V 1A SCH SOD323F SMT
D58	6649	CDBF0130L 30V 1A SCH SOD323F SMT
D59	6649	CDBF0130L 30V 1A SCH SOD323F SMT
D60	7617	BZX84C15LT1 15V0 0W225 ZEN SOT23
D61	7617	BZX84C15LT1 15V0 0W225 ZEN SOT23
D62	7750	CDSF4148 75V 0A15 1005 SMT
D201	6772	BRIDGE 25A 400V WIRE LEAD SIP
D203	6845	MUR1640CTG 400V 8A DIODE DUAL CC
D206	7848	MURA240T3 400V 2A DIO 403D SMT
D207	7848	MURA240T3 400V 2A DIO 403D SMT
D220	6843	MUR1620CTRG 200V 16A DIODE DUAL CA
K1	3105	RELAY 1C 10AMP DC12 030MA PC-C
L1	7732	220.0UH COIL SMT
L2	2910	120.0UH COIL SR4018T 1R6 SMT
L3	6672	64UH CHOKE 68T20AWG/T157-2 PCBMNT
L4	2910	120.0UH COIL SR4018T 1R6 SMT
L5	6672	64UH CHOKE 68T20AWG/T157-2 PCBMNT
L6	6672	64UH CHOKE 68T20AWG/T157-2 PCBMNT
L7	8108	120UH COIL 0R4 10MMSQ SMT
L8	7941	8.2UH COIL 1210 SMT
L9	6507	3.3MH COIL COMMON MODE 5A
L10	6507	3.3MH COIL COMMON MODE 5A
L11	2910	120.0UH COIL SR4018T 1R6 SMT
L12	7732	220.0UH COIL SMT
L13	2910	120.0UH COIL SR4018T 1R6 SMT
L204	3109	25UH COIL E44 FERR 14T 19AWG LITZ
L219	7974	1000UH 10% COIL 12MM SMT
Q1	6972	IRFB4227PBF TO220 NCH MFET TM
Q2	6763	IRFI4020H-117P MFET HLFBRDG TO220-5
Q3	6972	IRFB4227PBF TO220 NCH MFET TM
Q4	7720	TL431A 3 TERM ADJ VREG SMT SOT-23
Q5	7837	MMBT5401 PNP SOT-23 SMT
Q6	6972	IRFB4227PBF TO220 NCH MFET TM
Q7	6972	IRFB4227PBF TO220 NCH MFET TM
Q8	7665	MMBT4401 NPN SOT-23 SMT
Q9	7806	MMBF4391LT1 NCH JFET SOT-23 SMT T&R
Q10	8107	FOD814A OPTO-COUPLER 4P SMT IC
Q11	6977	FDT3612 NCH MFET SOT-223 SMT
Q12	8165	MMBTA92 PNP SOT-23 SMT
Q13	7806	MMBF4391LT1 NCH JFET SOT-23 SMT T&R
Q14	7838	MMBT3904 NPN SOT-23 SMT
Q15	7838	MMBT3904 NPN SOT-23 SMT
Q16	7701	MMBTA14 NPN DARL SOT-23 SMT
Q17	7837	MMBT5401 PNP SOT-23 SMT
Q18	7665	MMBT4401 NPN SOT-23 SMT
Q19	8022	MMBTA64LT1G PNP DARL SOT-23 SMT
Q20	7701	MMBTA14 NPN DARL SOT-23 SMT
Q21	7665	MMBT4401 NPN SOT-23 SMT
Q22	7837	MMBT5401 PNP SOT-23 SMT
Q23	8022	MMBTA64LT1G PNP DARL SOT-23 SMT
Q24	7701	MMBTA14 NPN DARL SOT-23 SMT
Q25	7665	MMBT4401 NPN SOT-23 SMT
Q26	7837	MMBT5401 PNP SOT-23 SMT
Q27	8022	MMBTA64LT1G PNP DARL SOT-23 SMT
Q28	7665	MMBT4401 NPN SOT-23 SMT
Q29	7701	MMBTA14 NPN DARL SOT-23 SMT
Q30	7844	MJD243T4G NPN DPAK3 SMT TS
Q31	7845	MJD253T4G PNP DPAK3 SMT TS
Q32	7806	MMBF4391LT1 NCH JFET SOT-23 SMT T&R
Q33	7806	MMBF4391LT1 NCH JFET SOT-23 SMT T&R
Q34	7837	MMBT5401 PNP SOT-23 SMT
Q35	7665	MMBT4401 NPN SOT-23 SMT
Q206	6975	SPW35N60CFD MOSFET N-CN 600V TO-247
Q207	6975	SPW35N60CFD MOSFET N-CN 600V TO-247
R1	7679	W100 4K99 1% 0805 SMT RES
R2	7621	W100 1K0 1% 0805 SMT RES
R3	7928	W125 10K00 0.1% 0805 SMT RES
R4	4985	W125 562K 1% 0805 SMT RES
R5	7621	W100 1K0 1% 0805 SMT RES
R7	8094	1W00 33K 5% 2512 SMT RES
R8	8157	1W00 47K 5% 2512 SMT RES
R9	8095	1W00 10K 5% 2512 SMT RES
R10	8012	1W00 4R7 5% 2512 SMT RES
R11	7686	W100 274K 1% 0805 SMT RES
R12	7739	W250 1R 5% 1206 SMT RES
R13	7852	W250 10R 5% 1206 SMT RES
R14	8012	1W00 4R7 5% 2512 SMT RES
R15	8012	1W00 4R7 5% 2512 SMT RES
R16	7928	W125 10K00 0.1% 0805 SMT RES
R17	7634	W100 20K5 1% 0805 SMT RES
R18	7672	W125 348R0 1% 0805 SMT RES
R19	7627	W100 13K 1% 0805 SMT RES
R20	4974	W125 45K3 1% 0805 SMT RES
R21	8093	1W00 15K 5% 2512 SMT RES
R22	8153	W125 5K36 1% 0805 SMT RES
R23	7621	W100 1K0 1% 0805 SMT RES
R24	7621	W100 1K0 1% 0805 SMT RES
R25	7624	W100 100R 1% 0805 SMT RES
R26	4964	W125 68R1 1% 0805 SMT RES
R27	7624	W100 100R 1% 0805 SMT RES
R28	7928	W125 10K00 0.1% 0805 SMT RES
R29	7852	W250 10R 5% 1206 SMT RES
R30	8012	1W00 4R7 5% 2512 SMT RES
R31	7625	W100 10K0 1% 0805 SMT RES
R32	7632	W100 2K32 1% 0805 SMT RES
R33	7621	W100 1K0 1% 0805 SMT RES
R34	7637	W125 3K32 1% 0805 SMT RES
R35	7637	W125 3K32 1% 0805 SMT RES
R36	7637	W125 3K32 1% 0805 SMT RES
R37	7928	W125 10K00 0.1% 0805 SMT RES
R38	8094	1W00 33K 5% 2512 SMT RES
R39	8012	1W00 4R7 5% 2512 SMT RES
R40	8012	1W00 4R7 5% 2512 SMT RES
R41	8012	1W00 4R7 5% 2512 SMT RES
R42	8199	W125 34K0 1% 0805 SMT RES
R43	7671	W125 249R0 1% 0805 SMT RES
R44	7627	W100 13K 1% 0805 SMT RES
R45	4974	W125 45K3 1% 0805 SMT RES
R46	8093	1W00 15K 5% 2512 SMT RES
R47	7928	W125 10K00 0.1% 0805 SMT RES
R48	7671	W125 249R0 1% 0805 SMT RES
R49	7679	W100 4K99 1% 0805 SMT RES
R50	7679	W100 4K99 1% 0805 SMT RES
R51	8157	1W00 47K 5% 2512 SMT RES
R52	7670	W125 47R5 1% 0805 SMT RES
R53	8131	W500 10R 5% 1210 SMT RES
R54	7824	W125 47K5 1% 0805 SMT RES
R55	7852	W250 10R 5% 1206 SMT RES
R56	8012	1W00 4R7 5% 2512 SMT RES
R57	8131	W500 10R 5% 1210 SMT RES
R58	7679	W100 4K99 1% 0805 SMT RES
R59	7928	W125 10K00 0.1% 0805 SMT RES
R60	8094	1W00 33K 5% 2512 SMT RES
R61	4615	W250 4R7 5% 1206 SMT RES
R62	7930	W250 22R 5% 1206 SMT RES
R63	7930	W250 22R 5% 1206 SMT RES
R64	7679	W100 4K99 1% 0805 SMT RES
R65	7709	W100 301R 1% 0805 SMT RES
R66	7627	W100 13K 1% 0805 SMT RES
R67	7900	W125 30K 0.5% 0805 SMT RES
R68	8093	1W00 15K 5% 2512 SMT RES
R69	7928	W125 10K00 0.1% 0805 SMT RES
R70	7671	W125 249R0 1% 0805 SMT RES
R71	7621	W100 1K0 1% 0805 SMT RES
R72	4971	1W00 39K 5% 2512 SMT RES
R73	8094	1W00 33K 5% 2512 SMT RES
R74	7670	W125 47R5 1% 0805 SMT RES
R75	7651	W250 1M0 1% 1206 SMT RES
R76	8160	W125 91K 5% 0805 SMT RES
R77	7852	W250 10R 5% 1206 SMT RES
R78	8012	1W00 4R7 5% 2512 SMT RES
R79	7822	W100 7K50 1% 0805 SMT RES
R80	7621	W100 1K0 1% 0805 SMT RES
R81	7710	W100 9K09 1% 0805 SMT RES
R82	7679	W100 4K99 1% 0805 SMT RES
R83	7928	W125 10K00 0.1% 0805 SMT RES
R84	7679	W100 4K99 1% 0805 SMT RES
R85	7675	W125 1K21 1% 0805 SMT RES
R86	7675	W125 1K21 1% 0805 SMT RES
R87	7630	W100 182K 1% 0805 SMT RES
R88	7824	W125 47K5 1% 0805 SMT RES
R90	7628	W100 15K0 1% 0805 SMT RES
R91	7821	W125 10R0 1% 0805 SMT RES
R92	7744	W250 4K7 5% 1206 SMT RES
R93	8137	W125 1K62 1% 0805 SMT RES
R94	7761	W100 12K1 1% 0603 SMT RES
R95	7679	W100 4K99 1% 0805 SMT RES
R96	7928	W125 10K00 0.1% 0805 SMT RES
R97	7679	W100 4K99 1% 0805 SMT RES
R98	7928	W125 10K00 0.1% 0805 SMT RES
R99	7928	W125 10K00 0.1% 0805 SMT RES
R100	7679	W100 4K99 1% 0805 SMT RES
R101	8137	W125 1K62 1% 0805 SMT RES
R102	8137	W125 1K62 1% 0805 SMT RES
R103	7675	W125 1K21 1% 0805 SMT RES
R104	7671	W125 249R0 1% 0805 SMT RES
R105	7672	W125 348R0 1% 0805 SMT RES
R106	7633	W100 2K74 1% 0805 SMT RES
R107	7637	W125 3K32 1% 0805 SMT RES
R108	7637	W125 3K32 1% 0805 SMT RES

M1527 PG 2 Parts Reference List 7/4/2018

REF	YS #	Description
R109	7637	W125 3K32 1% 0805 SMT RES
R110	7637	W125 3K32 1% 0805 SMT RES
R111	7632	W100 2K32 1% 0805 SMT RES
R112	7637	W125 3K32 1% 0805 SMT RES
R113	7637	W125 3K32 1% 0805 SMT RES
R114	8189	W125 4K02 0.1% 0805 SMT RES
R115	7649	W125 1K50 1% 0805 SMT RES
R116	7633	W100 2K74 1% 0805 SMT RES
R118	8183	1W00 2R0 1% 2512 SMT RES
R120	7852	W250 10R 5% 1206 SMT RES
R121	7824	W125 47K5 1% 0805 SMT RES
R122	7865	W125 150K 5% 0805 SMT RES
R123	7824	W125 47K5 1% 0805 SMT RES
R124	8008	W250 10K 5% ANTISURGE 0805 SMT RES
R125	8008	W250 10K 5% ANTISURGE 0805 SMT RES
R126	7632	W100 2K32 1% 0805 SMT RES
R127	7621	W100 1K0 1% 0805 SMT RES
R128	7621	W100 1K0 1% 0805 SMT RES
R129	7632	W100 2K32 1% 0805 SMT RES
R130	7824	W125 47K5 1% 0805 SMT RES
R131	8160	W125 91K 5% 0805 SMT RES
R132	7622	W100 1M0 1% 0805 SMT RES
R133	4971	1W00 39K 5% 2512 SMT RES
R134	4971	1W00 39K 5% 2512 SMT RES
R135	7637	W125 3K32 1% 0805 SMT RES
R136	7639	W100 357K 1% 0805 SMT RES
R137	7672	W125 348R0 1% 0805 SMT RES
R138	7621	W100 1K0 1% 0805 SMT RES
R139	7744	W250 4K7 5% 1206 SMT RES
R140	7727	W100 4R7 5% 0805 SMT RES
R141	7821	W125 10R0 1% 0805 SMT RES
R142	7672	W125 348R0 1% 0805 SMT RES
R143	7672	W125 348R0 1% 0805 SMT RES
R144	7821	W125 10R0 1% 0805 SMT RES
R145	4985	W125 562K 1% 0805 SMT RES
R146	8051	W125 68K 5% 0805 SMT RES
R147	7621	W100 1K0 1% 0805 SMT RES
R148	8153	W125 5K36 1% 0805 SMT RES
R149	8131	W500 10R 5% 1210 SMT RES
R150	8131	W500 10R 5% 1210 SMT RES
R151	7626	W100 100K0 1% 0805 SMT RES
R152	7624	W100 100R 1% 0805 SMT RES
R153	7820	W100 499R 1% 0805 SMT RES
R154	7820	W100 499R 1% 0805 SMT RES
R155	7621	W100 1K0 1% 0805 SMT RES
R156	7621	W100 1K0 1% 0805 SMT RES
R157	7637	W125 3K32 1% 0805 SMT RES
R158	7745	W125 0R 5% 0805 SMT RES
R159	7675	W125 1K21 1% 0805 SMT RES
R160	7626	W100 100K0 1% 0805 SMT RES
R161	8095	1W00 10K 5% 2512 SMT RES
R162	7852	W250 10R 5% 1206 SMT RES
R163	7624	W100 100R 1% 0805 SMT RES
R164	7739	W250 1R 5% 1206 SMT RES
R165	7628	W100 15K0 1% 0805 SMT RES
R166	8137	W125 1K62 1% 0805 SMT RES
R167	7634	W100 20K5 1% 0805 SMT RES
R168	7624	W100 100R 1% 0805 SMT RES
R169	7637	W125 3K32 1% 0805 SMT RES
R170	7631	W100 2K21 1% 0805 SMT RES
R171	4995	W125 14K0 1% 0805 SMT RES
R172	7852	W250 10R 5% 1206 SMT RES
R173	7821	W125 10R0 1% 0805 SMT RES
R174	7672	W125 348R0 1% 0805 SMT RES
R175	8160	W125 91K 5% 0805 SMT RES
R176	7759	W250 100K 5% 1206 SMT RES
R177	7759	W250 100K 5% 1206 SMT RES
R178	8160	W125 91K 5% 0805 SMT RES
R179	7821	W125 10R0 1% 0805 SMT RES
R180	7821	W125 10R0 1% 0805 SMT RES
R181	7672	W125 348R0 1% 0805 SMT RES
R182	7821	W125 10R0 1% 0805 SMT RES
R183	8160	W125 91K 5% 0805 SMT RES
R184	8160	W125 91K 5% 0805 SMT RES
R185	7821	W125 10R0 1% 0805 SMT RES
R186	7821	W125 10R0 1% 0805 SMT RES
R187	7821	W125 10R0 1% 0805 SMT RES
R188	7821	W125 10R0 1% 0805 SMT RES
R189	7672	W125 348R0 1% 0805 SMT RES
R190	8137	W125 1K62 1% 0805 SMT RES
R191	8137	W125 1K62 1% 0805 SMT RES
R192	7759	W250 100K 5% 1206 SMT RES
R193	7759	W250 100K 5% 1206 SMT RES
R194	7759	W250 100K 5% 1206 SMT RES
R195	7759	W250 100K 5% 1206 SMT RES
R200	7900	W125 30K 0.5% 0805 SMT RES
R201	4966	W125 40K2 1% 0805 SMT RES
R202	7626	W100 100K0 1% 0805 SMT RES
R203	7630	W100 182K 1% 0805 SMT RES
R204	7625	W100 10K0 1% 0805 SMT RES
R205	7621	W100 1K0 1% 0805 SMT RES
R206	7634	W100 20K5 1% 0805 SMT RES
R207	7928	W125 10K00 0.1% 0805 SMT RES
R208	7670	W125 47R5 1% 0805 SMT RES
R209	7634	W100 20K5 1% 0805 SMT RES
R210	8051	W125 68K 5% 0805 SMT RES
R211	7928	W125 10K00 0.1% 0805 SMT RES
R212	4966	W125 40K2 1% 0805 SMT RES
R213	7822	W100 7K50 1% 0805 SMT RES
R214	7623	W125 1M50 1% 0805 SMT RES
R215	7635	W100 221R 1% 0805 SMT RES
R216	6622	10R 20% THERMISTOR NTC
R217	8008	W250 10K 5% ANTISURGE 0805 SMT RES
R218	7634	W100 20K5 1% 0805 SMT RES
R219	7621	W100 1K0 1% 0805 SMT RES
R220	8182	W125 22K 5% 0805 SMT RES
R221	7635	W100 221R 1% 0805 SMT RES
R222	7822	W100 7K50 1% 0805 SMT RES
R223	7622	W100 1M0 1% 0805 SMT RES
R224	7635	W100 221R 1% 0805 SMT RES
R225	7865	W125 150K 5% 0805 SMT RES
R226	8189	W125 4K02 0.1% 0805 SMT RES
R227	8228	W125 75K 1% 0805 SMT RES
R228	7865	W125 150K 5% 0805 SMT RES
R229	7681	W125 8K25 1% 0805 SMT RES
R230	8189	W125 4K02 0.1% 0805 SMT RES
R231	7634	W100 20K5 1% 0805 SMT RES
R232	5074	W125 41K2 1% 0805 SMT RES
R233	7626	W100 100K0 1% 0805 SMT RES
R234	7626	W100 100K0 1% 0805 SMT RES
R235	7865	W125 150K 5% 0805 SMT RES
R236	8189	W125 4K02 0.1% 0805 SMT RES
R237	8228	W125 75K 1% 0805 SMT RES
R238	7634	W100 20K5 1% 0805 SMT RES
R239	7681	W125 8K25 1% 0805 SMT RES
R240	7682	W125 17K8 1% 0805 SMT RES
R241	7796	W063 1K37 1% 0603 SMT RES
R242	7673	W100 475R 1% 0805 SMT RES
R243	7865	W125 150K 5% 0805 SMT RES
R244	8189	W125 4K02 0.1% 0805 SMT RES
R245	7626	W100 100K0 1% 0805 SMT RES
R246	4966	W125 40K2 1% 0805 SMT RES
R247	5000	W125 140K 1% 0805 SMT RES
R248	7646	W125 681R 1% 0805 SMT RES
R249	7622	W100 1M0 1% 0805 SMT RES
R250	7629	W125 150K0 1% 0805 SMT RES
R251	7820	W100 499R 1% 0805 SMT RES
R252	7820	W100 499R 1% 0805 SMT RES
R253	7626	W100 100K0 1% 0805 SMT RES
R254	7626	W100 100K0 1% 0805 SMT RES
R255	8182	W125 22K 5% 0805 SMT RES
R256	8199	W125 34K0 1% 0805 SMT RES
R257	8228	W125 75K 1% 0805 SMT RES
R258	8199	W125 34K0 1% 0805 SMT RES
R259	8228	W125 75K 1% 0805 SMT RES
R260	7628	W100 15K0 1% 0805 SMT RES
R261	7624	W100 100R 1% 0805 SMT RES
R262	4974	W125 45K3 1% 0805 SMT RES
R263	7852	W250 10R 5% 1206 SMT RES
R264	4974	W125 45K3 1% 0805 SMT RES
R265	7759	W250 100K 5% 1206 SMT RES
R266	7759	W250 100K 5% 1206 SMT RES
R267	7626	W100 100K0 1% 0805 SMT RES
R268	7626	W100 100K0 1% 0805 SMT RES
R269	8189	W125 4K02 0.1% 0805 SMT RES
R270	5061	W125 2K87 1% 0805 SMT RES
R271	7679	W100 4K99 1% 0805 SMT RES
R272	6619	10K 5% THERMISTOR VISH NTC
R273	8189	W125 4K02 0.1% 0805 SMT RES
R274	8189	W125 4K02 0.1% 0805 SMT RES
R275	7633	W100 2K74 1% 0805 SMT RES
R276	8189	W125 4K02 0.1% 0805 SMT RES
R277	7852	W250 10R 5% 1206 SMT RES
R278	7626	W100 100K0 1% 0805 SMT RES
R279	7626	W100 100K0 1% 0805 SMT RES
R280	7639	W100 357K 1% 0805 SMT RES
R281	7624	W100 100R 1% 0805 SMT RES
R282	7672	W125 348R0 1% 0805 SMT RES
R283	8008	W250 10K 5% ANTISURGE 0805 SMT RES
R284	8157	1W00 47K 5% 2512 SMT RES
R285	8157	1W00 47K 5% 2512 SMT RES
R288	7636	W100 27K4 1% 0805 SMT RES
R292	7759	W250 100K 5% 1206 SMT RES
R293	7759	W250 100K 5% 1206 SMT RES
SHLD1	1667	PSAMP TRANSISTOR SHIELD PAD
SHLD2	1668	PSAMP EMI SHIELD CASE
T1	1249	XFMR O/P 400W PQ40/40 PS10,12,15P
T2	8188	XF3955 GATE DRIVE XFMR SMT
T3	8188	XF3955 GATE DRIVE XFMR SMT
TP1	8002	TEST POINT MINIATURE SMT
TP2	8002	TEST POINT MINIATURE SMT
TP3	8002	TEST POINT MINIATURE SMT
TP4	8002	TEST POINT MINIATURE SMT
TP5	8002	TEST POINT MINIATURE SMT
TP6	8002	TEST POINT MINIATURE SMT
TP7	8002	TEST POINT MINIATURE SMT
TP8	8002	TEST POINT MINIATURE SMT
TP9	8002	TEST POINT MINIATURE SMT
TP10	8002	TEST POINT MINIATURE SMT
TP11	8002	TEST POINT MINIATURE SMT
TP12	8002	TEST POINT MINIATURE SMT
TP13	8002	TEST POINT MINIATURE SMT
TP14	8002	TEST POINT MINIATURE SMT
TP15	8002	TEST POINT MINIATURE SMT
TP16	8002	TEST POINT MINIATURE SMT
TP17	8002	TEST POINT MINIATURE SMT
TP18	8002	TEST POINT MINIATURE SMT
TP19	8002	TEST POINT MINIATURE SMT
TP20	8002	TEST POINT MINIATURE SMT
TP21	8002	TEST POINT MINIATURE SMT
U1	7949	ZXGD3002E6 GATE DRVR 9A SMT SOT326
U2	6666	LM5008A 100V REG 0A35 BUCK SW SMT
U3	7949	ZXGD3002E6 GATE DRVR 9A SMT SOT326
U4	7828	LM13700M XCONDUCTANC AMP SMT IC
U5	7884	IRS20957S DIG AUDIO DRVR SMT SOIC
U6	8107	FOD814A OPTO-COUPLER 4P SMT IC
U7	7949	ZXGD3002E6 GATE DRVR 9A SMT SOT326
U8	7949	ZXGD3002E6 GATE DRVR 9A SMT SOT326
U9	7884	IRS20957S DIG AUDIO DRVR SMT SOIC
U10	6767	AD825 HS OPAMP JFET SO-8 SMT
U11	8121	CNY17F-2S OPTO-COUPLER 6P SMT IC
U12	7668	MC33079D QUAD OPAMP SMT SO14
U13	7668	MC33079D QUAD OPAMP SMT SO14
U14	7884	IRS20957S DIG AUDIO DRVR SMT SOIC
U15	7812	SN74AHC1G86 SINGLE XOR SMT SOT235
U16	8124	TLV3201 SNGLE COMPARATOR SMT SOT235
U17	7993	TL071CDR OPAMP JFET 3MHZ SO-8 SMT
U18	7812	SN74AHC1G86 SINGLE XOR SMT SOT235
U19	6652	MIC4424YM DUAL MOSFET DRVR SMT S08
U20	6652	MIC4424YM DUAL MOSFET DRVR SMT S08
U21	6666	LM5008A 100V REG 0A35 BUCK SW SMT
U22	6652	MIC4424YM DUAL MOSFET DRVR SMT S08
U23	6651	LM5020-2 CURR MOD PWM SMT IC SSOP10
U24	7659	LM339M QUAD SS COMP SMT SO-14
U25	7661	LM393D DUAL COMPARATOR SMT SO-8
U26	7661	LM393D DUAL COMPARATOR SMT SO-8
U27	7661	LM393D DUAL COMPARATOR SMT SO-8
U202	8158	LNK306G OFFLINE SWITCH SMT SMD8B
U205	7987	UCC25600 RES MODE CTRL SMT SO8
W1	4208	10 CIR SOCKT DIL RA 0.1
W2	4167	2X2PIN 4.2MM RA HEADER VAL-U-LOK
W201	4146	3 PIN POWER PIN HEADER MALE POLZED
ZD3	7973	BAS316 100V 0A25 DIODE SOD323 SMT
ZD201	8159	SMAZ18-13-F 18V0 1W0 5% SMT ZEN

M1528 PG1 Parts Reference List 7/4/2018

REF	YS #	Description
C1	7737	10N 50V 10%CAP 0805 SMT X7R
C2	7878	1U 25V 20%CAP 1206 SMT X7R
C3	8096	470N 100V 10%CAP 1206 SMT X7R
C4	7875	100N 100V 10%CAP 1206 SMT X7R
C5	7877	2U2 100V 20%CAP 1812 SMT X7R
C6	5979	100N 50V 5%CAP 0805 SMT X7R
C7	7878	1U 25V 20%CAP 1206 SMT X7R
C8	8088	10U 16V 10%CAP 0805 SMT X6S
C9	5665	1500U 100V 20%CAP BLK 22X35MM
C10	7876	2U2 200V 20%CAP 3025 SMT CER
C11	7877	2U2 100V 20%CAP 1812 SMT X7R
C12	7737	10N 50V 10%CAP 0805 SMT X7R
C13	7741	2N2 50V 10%CAP 0805 SMT X7R
C14	7741	2N2 50V 10%CAP 0805 SMT X7R
C15	5665	1500U 100V 20%CAP BLK 22X35MM
C16	7748	47P 100V 5%CAP 0805 SMT NPO
C17	8088	10U 16V 10%CAP 0805 SMT X6S
C18	7693	1N 50V 5%CAP 0805 SMT NPO
C19	8092	100N 450V 10%CAP 1206 SMT X7T
C20	7737	10N 50V 10%CAP 0805 SMT X7R
C21	5979	100N 50V 5%CAP 0805 SMT X7R
C22	7693	1N 50V 5%CAP 0805 SMT NPO
C23	5979	100N 50V 5%CAP 0805 SMT X7R
C24	7737	10N 50V 10%CAP 0805 SMT X7R
C25	8272	220P 100V 10%CAP 0805 SMT X7R
C26	7748	47P 100V 5%CAP 0805 SMT NPO
C27	7735	4U7 50V 10%CAP 1210 SMT CER
C28	7735	4U7 50V 10%CAP 1210 SMT CER
C29	8092	100N 450V 10%CAP 1206 SMT X7T
C30	7877	2U2 100V 20%CAP 1812 SMT X7R
C31	7878	1U 25V 20%CAP 1206 SMT X7R
C32	5840	22N 400V 10%CAP BLK RAD POLY FLM
C33	7878	1U 25V 20%CAP 1206 SMT X7R
C34	7694	3N3 25V 5%CAP 0805 SMT NPO
C35	8092	100N 450V 10%CAP 1206 SMT X7T
C36	7876	2U2 200V 20%CAP 3025 SMT CER
C37	7694	3N3 25V 5%CAP 0805 SMT NPO
C38	8092	100N 450V 10%CAP 1206 SMT X7T
C39	7799	5N6 50V 5%CAP 0805 SMT C0G
C40	7783	2N7 100V 10%CAP 0805 SMT C0G
C41	5979	100N 50V 5%CAP 0805 SMT X7R
C42	7748	47P 100V 5%CAP 0805 SMT NPO
C43	5979	100N 50V 5%CAP 0805 SMT X7R
C44	5979	100N 50V 5%CAP 0805 SMT X7R
C45	7878	1U 25V 20%CAP 1206 SMT X7R
C46	7878	1U 25V 20%CAP 1206 SMT X7R
C47	8272	220P 100V 10%CAP 0805 SMT X7R
C48	7748	47P 100V 5%CAP 0805 SMT NPO
C49	7811	100U 25V 20%CAP 8X5.4 SMT ELE
C50	7735	4U7 50V 10%CAP 1210 SMT CER
C51	5516	47N 2000V 10%CAP AXL POLYPROP BULK
C52	7735	4U7 50V 10%CAP 1210 SMT CER
C53	7735	4U7 50V 10%CAP 1210 SMT CER
C54	7735	4U7 50V 10%CAP 1210 SMT CER
C55	7877	2U2 100V 20%CAP 1812 SMT X7R
C56	7877	2U2 100V 20%CAP 1812 SMT X7R
C57	7878	1U 25V 20%CAP 1206 SMT X7R
C58	7878	1U 25V 20%CAP 1206 SMT X7R
C59	8092	100N 450V 10%CAP 1206 SMT X7T
C60	7878	1U 25V 20%CAP 1206 SMT X7R
C61	7876	2U2 200V 20%CAP 3025 SMT CER
C62	8092	100N 450V 10%CAP 1206 SMT X7T
C63	7878	1U 25V 20%CAP 1206 SMT X7R
C64	7741	2N2 50V 10%CAP 0805 SMT X7R
C65	7741	2N2 50V 10%CAP 0805 SMT X7R
C66	7748	47P 100V 5%CAP 0805 SMT NPO
C67	8088	10U 16V 10%CAP 0805 SMT X6S
C68	7741	2N2 50V 10%CAP 0805 SMT X7R
C69	7878	1U 25V 20%CAP 1206 SMT X7R
C70	7737	10N 50V 10%CAP 0805 SMT X7R
C71	7693	1N 50V 5%CAP 0805 SMT NPO
C72	7738	10U0 16V 10%CAP 1206 SMT X7R
C73	5979	100N 50V 5%CAP 0805 SMT X7R
C74	7748	47P 100V 5%CAP 0805 SMT NPO
C75	5979	100N 50V 5%CAP 0805 SMT X7R
C76	7734	1U0 50V 10%CAP 1206 SMT CER
C77	7877	2U2 100V 20%CAP 1812 SMT X7R
C78	7877	2U2 100V 20%CAP 1812 SMT X7R
C79	7737	10N 50V 10%CAP 0805 SMT X7R
C80	7878	1U 25V 20%CAP 1206 SMT X7R
C81	7741	2N2 50V 10%CAP 0805 SMT X7R
C82	7877	2U2 100V 20%CAP 1812 SMT X7R
C83	7875	100N 100V 10%CAP 1206 SMT X7R
C84	5980	10P 1000V 10%CAP 1206 SMT X7R
C85	8088	10U 16V 10%CAP 0805 SMT X6S
C86	5971	680N 250V 5% CAPBLK RAD POLY FLM
C87	5971	680N 250V 5% CAPBLK RAD POLY FLM
C88	5971	680N 250V 5% CAPBLK RAD POLY FLM
C89	7692	150P 50V 5%CAP 0805 SMT NPO
C90	7738	10U0 16V 10%CAP 1206 SMT X7R
C91	7878	1U 25V 20%CAP 1206 SMT X7R
C92	7697	22U 16V 5%CAP 5X5.5 SMT ELC
C93	7734	1U0 50V 10%CAP 1206 SMT CER
C94	7734	1U0 50V 10%CAP 1206 SMT CER
C95	7697	22U 16V 5%CAP 5X5.5 SMT ELC
C96	7877	2U2 100V 20%CAP 1812 SMT X7R
C97	7877	2U2 100V 20%CAP 1812 SMT X7R
C98	7741	2N2 50V 10%CAP 0805 SMT X7R
C99	7878	1U 25V 20%CAP 1206 SMT X7R
C100	7875	100N 100V 10%CAP 1206 SMT X7R
C101	7875	100N 100V 10%CAP 1206 SMT X7R
C102	7694	3N3 25V 5%CAP 0805 SMT NPO
C103	8010	33P 100V 5%CAP 0603 SMT C0G
C104	7877	2U2 100V 20%CAP 1812 SMT X7R
C105	8096	470N 100V 10%CAP 1206 SMT X7R
C106	7694	3N3 25V 5%CAP 0805 SMT NPO
C107	7737	10N 50V 10%CAP 0805 SMT X7R
C108	7735	4U7 50V 10%CAP 1210 SMT CER
C109	7735	4U7 50V 10%CAP 1210 SMT CER
C110	7737	10N 50V 10%CAP 0805 SMT X7R
C111	7927	100P 50V 10%CAP 0805 SMT NPO
C112	7735	4U7 50V 10%CAP 1210 SMT CER
C113	7927	100P 50V 10%CAP 0805 SMT NPO
C114	7693	1N 50V 5%CAP 0805 SMT NPO
C115	7735	4U7 50V 10%CAP 1210 SMT CER
C116	7693	1N 50V 5%CAP 0805 SMT NPO
C117	5979	100N 50V 5%CAP 0805 SMT X7R
C118	7737	10N 50V 10%CAP 0805 SMT X7R
C119	5665	1500U 100V 20%CAP BLK 22X35MM
C120	5665	1500U 100V 20%CAP BLK 22X35MM
C121	5665	1500U 100V 20%CAP BLK 22X35MM
C122	5665	1500U 100V 20%CAP BLK 22X35MM
C123	7735	4U7 50V 10%CAP 1210 SMT CER
C124	7735	4U7 50V 10%CAP 1210 SMT CER
C125	5840	22N 400V 10%CAP BLK RAD POLY FLM
C126	7737	10N 50V 10%CAP 0805 SMT X7R
C127	7875	100N 100V 10%CAP 1206 SMT X7R
C128	7693	1N 50V 5%CAP 0805 SMT NPO
C129	7694	3N3 25V 5%CAP 0805 SMT NPO
C130	7931	270P 50V 5%CAP 0805 SMT NPO
C131	7737	10N 50V 10%CAP 0805 SMT X7R
C132	7737	10N 50V 10%CAP 0805 SMT X7R
C133	8096	470N 100V 10%CAP 1206 SMT X7R
C134	7734	1U0 50V 10%CAP 1206 SMT CER
C135	7748	47P 100V 5%CAP 0805 SMT NPO
C136	7737	10N 50V 10%CAP 0805 SMT X7R
C137	7748	47P 100V 5%CAP 0805 SMT NPO
C138	7737	10N 50V 10%CAP 0805 SMT X7R
C139	7878	1U 25V 20%CAP 1206 SMT X7R
C140	7748	47P 100V 5%CAP 0805 SMT NPO
C141	7877	2U2 100V 20%CAP 1812 SMT X7R
C142	7799	5N6 50V 5%CAP 0805 SMT C0G
C143	7799	5N6 50V 5%CAP 0805 SMT C0G
C144	7734	1U0 50V 10%CAP 1206 SMT CER
C145	5979	100N 50V 5%CAP 0805 SMT X7R
C146	5979	100N 50V 5%CAP 0805 SMT X7R
C147	7878	1U 25V 20%CAP 1206 SMT X7R
C148	7878	1U 25V 20%CAP 1206 SMT X7R
C149	7878	1U 25V 20%CAP 1206 SMT X7R
C150	7878	1U 25V 20%CAP 1206 SMT X7R
C151	7878	1U 25V 20%CAP 1206 SMT X7R
C152	7878	1U 25V 20%CAP 1206 SMT X7R
C153	7735	4U7 50V 10%CAP 1210 SMT CER
C154	7735	4U7 50V 10%CAP 1210 SMT CER
C155	7878	1U 25V 20%CAP 1206 SMT X7R
C156	7878	1U 25V 20%CAP 1206 SMT X7R
C157	7878	1U 25V 20%CAP 1206 SMT X7R
C158	7878	1U 25V 20%CAP 1206 SMT X7R
C159	7878	1U 25V 20%CAP 1206 SMT X7R
C204	7734	1U0 50V 10%CAP 1206 SMT CER
C209	6545	1N 250V 20%CAP BLK 'Y' 10MM AC
C210	5972	680N 400V 5%CAP BLK RAD POLY FLM
C213	6545	1N 250V 20%CAP BLK 'Y' 10MM AC
C214	6545	1N 250V 20%CAP BLK 'Y' 10MM AC
C215	5663	1200U 200V 20%CAP BLK 25X40MM
C216	5663	1200U 200V 20%CAP BLK 25X40MM
C220	5979	100N 50V 5%CAP 0805 SMT X7R
C221	7735	4U7 50V 10%CAP 1210 SMT CER
C230	6545	1N 250V 20%CAP BLK 'Y' 10MM AC
C231	5262	1U 275V 20%CAP BLK 'X2'26.0MM AC
C232	5827	150N 250V 20%CAP BLK 'X2' 15MM AC
C233	5262	1U 275V 20%CAP BLK 'X2'26.0MM AC
C236	7734	1U0 50V 10%CAP 1206 SMT CER
C237	7601	220N 50V 10%CAP 1206 SMT X7R
C239	7737	10N 50V 10%CAP 0805 SMT X7R
C243	5979	100N 50V 5%CAP 0805 SMT X7R
C244	7738	10U0 16V 10%CAP 1206 SMT X7R
D1	8109	BAV21WS 200V 0A2 SOD323 SMT
D2	7889	ES3D 200V 3A0 D214 SMT SMC
D3	7889	ES3D 200V 3A0 D214 SMT SMC
D4	7848	MURA240T3 400V 2A DIO 403D SMT
D5	8109	BAV21WS 200V 0A2 SOD323 SMT
D6	8109	BAV21WS 200V 0A2 SOD323 SMT
D7	8109	BAV21WS 200V 0A2 SOD323 SMT
D8	7830	MM3Z12VT1G 12V0 0W2 5% SMT ZEN
D9	7914	MMBZ5231B 5V1 0W35 5% SMT ZEN
D10	7830	MM3Z12VT1G 12V0 0W2 5% SMT ZEN
D11	7889	ES3D 200V 3A0 D214 SMT SMC
D12	7889	ES3D 200V 3A0 D214 SMT SMC
D13	7848	MURA240T3 400V 2A DIO 403D SMT
D14	7830	MM3Z12VT1G 12V0 0W2 5% SMT ZEN
D15	8109	BAV21WS 200V 0A2 SOD323 SMT
D16	8109	BAV21WS 200V 0A2 SOD323 SMT
D17	7830	MM3Z12VT1G 12V0 0W2 5% SMT ZEN
D18	8076	MMSZ4690T1G 5V6 0W5 5% SMT ZEN
D19	7830	MM3Z12VT1G 12V0 0W2 5% SMT ZEN
D20	7889	ES3D 200V 3A0 D214 SMT SMC
D21	7889	ES3D 200V 3A0 D214 SMT SMC
D22	7848	MURA240T3 400V 2A DIO 403D SMT
D23	7830	MM3Z12VT1G 12V0 0W2 5% SMT ZEN
D24	8109	BAV21WS 200V 0A2 SOD323 SMT
D25	8109	BAV21WS 200V 0A2 SOD323 SMT
D26	8185	SMBJ5371B 60V 5W0 DO214AA SMT ZEN
D27	8109	BAV21WS 200V 0A2 SOD323 SMT
D28	8109	BAV21WS 200V 0A2 SOD323 SMT
D29	7996	SMAZ10-13-F 10V0 1W0 10% SMT ZEN
D30	7996	SMAZ10-13-F 10V0 1W0 10% SMT ZEN
D31	8185	SMBJ5371B 60V 5W0 DO214AA SMT ZEN
D32	8109	BAV21WS 200V 0A2 SOD323 SMT
D33	8109	BAV21WS 200V 0A2 SOD323 SMT
D34	8109	BAV21WS 200V 0A2 SOD323 SMT
D35	7965	DFLZ5V1-7 5V1 1W0 5% SMT ZEN
D36	8085	ES1H 500V 1A0 D214 UPGT 8814
D37	7996	SMAZ10-13-F 10V0 1W0 10% SMT ZEN
D39	7848	MURA240T3 400V 2A DIO 403D SMT
D40	8109	BAV21WS 200V 0A2 SOD323 SMT
D41	8109	BAV21WS 200V 0A2 SOD323 SMT
D42	8109	BAV21WS 200V 0A2 SOD323 SMT
D43	7914	MMBZ5231B 5V1 0W35 5% SMT ZEN
D44	7750	CDSF4148 75V 0A15 1005 SMT
D45	7830	MM3Z12VT1G 12V0 0W2 5% SMT ZEN
D46	7914	MMBZ5231B 5V1 0W35 5% SMT ZEN
D47	6649	CDBF0130L 30V 1A SCH SOD323F SMT
D48	7973	BAS316 100V 0A25 DIODE SOD323 SMT
D50	7750	CDSF4148 75V 0A15 1005 SMT
D51	7750	CDSF4148 75V 0A15 1005 SMT
D52	8109	BAV21WS 200V 0A2 SOD323 SMT
D53	7750	CDSF4148 75V 0A15 1005 SMT
D54	8109	BAV21WS 200V 0A2 SOD323 SMT
D55	7750	CDSF4148 75V 0A15 1005 SMT
D57	6649	CDBF0130L 30V 1A SCH SOD323F SMT
D58	6649	CDBF0130L 30V 1A SCH SOD323F SMT
D59	6649	CDBF0130L 30V 1A SCH SOD323F SMT
D60	7617	BZX84C15LT1 15V0 0W225 ZEN SOT23
D61	7617	BZX84C15LT1 15V0 0W225 ZEN SOT23
D62	7750	CDSF4148 75V 0A15 1005 SMT
D201	6772	BRIDGE 25A 400V WIRE LEAD SIP
D203	6845	MUR1640CTG 400V 8A DIODE DUAL CC
D206	7848	MURA240T3 400V 2A DIO 403D SMT
D207	7848	MURA240T3 400V 2A DIO 403D SMT
D220	6843	MUR1620CTRG 200V 16A DIODE DUAL CA
K1	3105	RELAY 1C 10AMP DC12 030MA PC-C
L1	7732	220.0UH COIL SMT
L2	2910	120.0UH COIL SR4018T 1R6 SMT
L3	6672	64UH CHOKE 68T20AWG/T157-2 PCBMNT
L4	2910	120.0UH COIL SR4018T 1R6 SMT
L5	6672	64UH CHOKE 68T20AWG/T157-2 PCBMNT
L6	6672	64UH CHOKE 68T20AWG/T157-2 PCBMNT
L7	8108	120UH COIL 0R4 10MMSQ SMT
L8	7941	8.2UH COIL 1210 SMT
L9	6507	3.3MH COIL COMMON MODE 5A
L10	6507	3.3MH COIL COMMON MODE 5A
L11	2910	120.0UH COIL SR4018T 1R6 SMT
L12	7732	220.0UH COIL SMT
L13	2910	120.0UH COIL SR4018T 1R6 SMT
L204	3109	25UH COIL E44 FERR 14T 19AWG LITZ
L219	7974	1000UH 10% COIL 12MM SMT
Q1	6972	IRFB4227PBF TO220 NCH MFET TM
Q2	6763	IRFI4020H-117P MFET HLFBRDG TO220-5
Q3	6972	IRFB4227PBF TO220 NCH MFET TM
Q4	7720	TL431A 3 TERM ADJ VREG SMT SOT-23
Q5	7837	MMBT5401 PNP SOT-23 SMT
Q6	6972	IRFB4227PBF TO220 NCH MFET TM
Q7	6972	IRFB4227PBF TO220 NCH MFET TM
Q8	7665	MMBT4401 NPN SOT-23 SMT
Q9	7806	MMBF4391LT1 NCH JFET SOT-23 SMT T&R
Q10	8107	FOD814A OPTO-COUPLER 4P SMT IC
Q11	6977	FDT3612 NCH MFET SOT-223 SMT
Q12	8165	MMBTA92 PNP SOT-23 SMT
Q13	7806	MMBF4391LT1 NCH JFET SOT-23 SMT T&R
Q14	7838	MMBT3904 NPN SOT-23 SMT
Q15	7838	MMBT3904 NPN SOT-23 SMT
Q16	7701	MMBTA14 NPN DARL SOT-23 SMT
Q17	7837	MMBT5401 PNP SOT-23 SMT
Q18	7665	MMBT4401 NPN SOT-23 SMT
Q19	8022	MMBTA64LT1G PNP DARL SOT-23 SMT
Q20	7701	MMBTA14 NPN DARL SOT-23 SMT
Q21	7665	MMBT4401 NPN SOT-23 SMT
Q22	7837	MMBT5401 PNP SOT-23 SMT
Q23	8022	MMBTA64LT1G PNP DARL SOT-23 SMT
Q24	7701	MMBTA14 NPN DARL SOT-23 SMT
Q25	7665	MMBT4401 NPN SOT-23 SMT
Q26	7837	MMBT5401 PNP SOT-23 SMT
Q27	8022	MMBTA64LT1G PNP DARL SOT-23 SMT
Q28	7665	MMBT4401 NPN SOT-23 SMT
Q29	7701	MMBTA14 NPN DARL SOT-23 SMT
Q30	7844	MJD243T4G NPN DPAK3 SMT TS
Q31	7845	MJD253T4G PNP DPAK3 SMT TS
Q32	7806	MMBF4391LT1 NCH JFET SOT-23 SMT T&R
Q33	7806	MMBF4391LT1 NCH JFET SOT-23 SMT T&R
Q34	7837	MMBT5401 PNP SOT-23 SMT
Q35	7665	MMBT4401 NPN SOT-23 SMT
Q206	6975	SPW35N60CFD MOSFET N-CN 600V TO-247
Q207	6975	SPW35N60CFD MOSFET N-CN 600V TO-247
R1	7679	W100 4K99 1% 0805 SMT RES
R2	7621	W100 1K0 1% 0805 SMT RES
R3	7928	W125 10K00 0.1% 0805 SMT RES
R4	4985	W125 562K 1% 0805 SMT RES
R5	7621	W100 1K0 1% 0805 SMT RES
R7	8094	1W00 33K 5% 2512 SMT RES
R8	8157	1W00 47K 5% 2512 SMT RES
R9	8095	1W00 10K 5% 2512 SMT RES
R10	8012	1W00 4R7 5% 2512 SMT RES
R11	7686	W100 274K 1% 0805 SMT RES
R12	7739	W250 1R 5% 1206 SMT RES
R13	7852	W250 10R 5% 1206 SMT RES
R14	8012	1W00 4R7 5% 2512 SMT RES
R15	8012	1W00 4R7 5% 2512 SMT RES
R16	7928	W125 10K00 0.1% 0805 SMT RES
R17	7634	W100 20K5 1% 0805 SMT RES
R18	7672	W125 348R0 1% 0805 SMT RES
R19	7627	W100 13K 1% 0805 SMT RES
R20	4974	W125 45K3 1% 0805 SMT RES
R21	8093	1W00 15K 5% 2512 SMT RES
R22	8153	W125 5K36 1% 0805 SMT RES
R23	7621	W100 1K0 1% 0805 SMT RES
R24	7621	W100 1K0 1% 0805 SMT RES
R25	7624	W100 100R 1% 0805 SMT RES
R26	4964	W125 68R1 1% 0805 SMT RES
R27	7624	W100 100R 1% 0805 SMT RES
R28	7928	W125 10K00 0.1% 0805 SMT RES
R29	7852	W250 10R 5% 1206 SMT RES
R30	8012	1W00 4R7 5% 2512 SMT RES
R31	7625	W100 10K0 1% 0805 SMT RES
R32	7632	W100 2K32 1% 0805 SMT RES
R33	7621	W100 1K0 1% 0805 SMT RES
R34	7637	W125 3K32 1% 0805 SMT RES
R35	7637	W125 3K32 1% 0805 SMT RES
R36	7637	W125 3K32 1% 0805 SMT RES
R37	7928	W125 10K00 0.1% 0805 SMT RES
R38	8094	1W00 33K 5% 2512 SMT RES
R39	8012	1W00 4R7 5% 2512 SMT RES
R40	8012	1W00 4R7 5% 2512 SMT RES
R41	8012	1W00 4R7 5% 2512 SMT RES
R42	8199	W125 34K0 1% 0805 SMT RES
R43	7671	W125 249R0 1% 0805 SMT RES
R44	7627	W100 13K 1% 0805 SMT RES
R45	4974	W125 45K3 1% 0805 SMT RES
R46	8093	1W00 15K 5% 2512 SMT RES
R47	7928	W125 10K00 0.1% 0805 SMT RES
R48	7671	W125 249R0 1% 0805 SMT RES
R49	7679	W100 4K99 1% 0805 SMT RES
R50	7679	W100 4K99 1% 0805 SMT RES
R51	8157	1W00 47K 5% 2512 SMT RES
R52	7670	W125 47R5 1% 0805 SMT RES
R53	8131	W500 10R 5% 1210 SMT RES
R54	7824	W125 47K5 1% 0805 SMT RES
R55	7852	W250 10R 5% 1206 SMT RES
R56	8012	1W00 4R7 5% 2512 SMT RES
R57	8131	W500 10R 5% 1210 SMT RES
R58	7679	W100 4K99 1% 0805 SMT RES
R59	7928	W125 10K00 0.1% 0805 SMT RES
R60	8094	1W00 33K 5% 2512 SMT RES
R61	4615	W250 4R7 5% 1206 SMT RES
R62	7930	W250 22R 5% 1206 SMT RES
R63	7930	W250 22R 5% 1206 SMT RES
R64	7679	W100 4K99 1% 0805 SMT RES
R65	7709	W100 301R 1% 0805 SMT RES
R66	7627	W100 13K 1% 0805 SMT RES
R67	7900	W125 30K 0.5% 0805 SMT RES
R68	8093	1W00 15K 5% 2512 SMT RES
R69	7928	W125 10K00 0.1% 0805 SMT RES
R70	7671	W125 249R0 1% 0805 SMT RES
R71	7621	W100 1K0 1% 0805 SMT RES
R72	4971	1W00 39K 5% 2512 SMT RES
R73	8094	1W00 33K 5% 2512 SMT RES
R74	7670	W125 47R5 1% 0805 SMT RES
R75	7651	W250 1M0 1% 1206 SMT RES
R76	8160	W125 91K 5% 0805 SMT RES
R77	7852	W250 10R 5% 1206 SMT RES
R78	8012	1W00 4R7 5% 2512 SMT RES
R79	7822	W100 7K50 1% 0805 SMT RES
R80	7621	W100 1K0 1% 0805 SMT RES
R81	7710	W100 9K09 1% 0805 SMT RES
R82	7679	W100 4K99 1% 0805 SMT RES
R83	7928	W125 10K00 0.1% 0805 SMT RES
R84	7679	W100 4K99 1% 0805 SMT RES
R85	7675	W125 1K21 1% 0805 SMT RES
R86	7675	W125 1K21 1% 0805 SMT RES
R87	7630	W100 182K 1% 0805 SMT RES
R88	7824	W125 47K5 1% 0805 SMT RES
R90	7628	W100 15K0 1% 0805 SMT RES
R91	7821	W125 10R0 1% 0805 SMT RES
R92	7744	W250 4K7 5% 1206 SMT RES
R93	8137	W125 1K62 1% 0805 SMT RES
R94	7761	W100 12K1 1% 0603 SMT RES
R95	7679	W100 4K99 1% 0805 SMT RES
R96	7928	W125 10K00 0.1% 0805 SMT RES
R97	7679	W100 4K99 1% 0805 SMT RES
R98	7928	W125 10K00 0.1% 0805 SMT RES
R99	7928	W125 10K00 0.1% 0805 SMT RES
R100	7679	W100 4K99 1% 0805 SMT RES
R101	8137	W125 1K62 1% 0805 SMT RES
R102	8137	W125 1K62 1% 0805 SMT RES
R103	7675	W125 1K21 1% 0805 SMT RES
R104	7671	W125 249R0 1% 0805 SMT RES
R105	7672	W125 348R0 1% 0805 SMT RES
R106	7633	W100 2K74 1% 0805 SMT RES
R107	7637	W125 3K32 1% 0805 SMT RES
R108	7637	W125 3K32 1% 0805 SMT RES

M1528 PG2 Parts Reference List 7/4/2018

REF	YS #	Description
R109	7637	W125 3K32 1% 0805 SMT RES
R110	7637	W125 3K32 1% 0805 SMT RES
R111	7632	W100 2K32 1% 0805 SMT RES
R112	7637	W125 3K32 1% 0805 SMT RES
R113	7637	W125 3K32 1% 0805 SMT RES
R114	8189	W125 4K02 0.1% 0805 SMT RES
R115	7649	W125 1K50 1% 0805 SMT RES
R116	7633	W100 2K74 1% 0805 SMT RES
R118	8183	1W00 2R0 1% 2512 SMT RES
R120	7852	W250 10R 5% 1206 SMT RES
R121	7824	W125 47K5 1% 0805 SMT RES
R122	7865	W125 150K 5% 0805 SMT RES
R123	7824	W125 47K5 1% 0805 SMT RES
R124	8008	W250 10K 5% ANTISURGE 0805 SMT RES
R125	8008	W250 10K 5% ANTISURGE 0805 SMT RES
R126	7632	W100 2K32 1% 0805 SMT RES
R127	7621	W100 1K0 1% 0805 SMT RES
R128	7621	W100 1K0 1% 0805 SMT RES
R129	7632	W100 2K32 1% 0805 SMT RES
R130	7824	W125 47K5 1% 0805 SMT RES
R131	8160	W125 91K 5% 0805 SMT RES
R132	7622	W100 1M0 1% 0805 SMT RES
R133	4971	1W00 39K 5% 2512 SMT RES
R134	4971	1W00 39K 5% 2512 SMT RES
R135	7637	W125 3K32 1% 0805 SMT RES
R136	7639	W100 357K 1% 0805 SMT RES
R137	7672	W125 348R0 1% 0805 SMT RES
R138	7621	W100 1K0 1% 0805 SMT RES
R139	7744	W250 4K7 5% 1206 SMT RES
R140	7727	W100 4R7 5% 0805 SMT RES
R141	7821	W125 10R0 1% 0805 SMT RES
R142	7672	W125 348R0 1% 0805 SMT RES
R143	7672	W125 348R0 1% 0805 SMT RES
R144	7821	W125 10R0 1% 0805 SMT RES
R145	4985	W125 562K 1% 0805 SMT RES
R146	8051	W125 68K 5% 0805 SMT RES
R147	7621	W100 1K0 1% 0805 SMT RES
R148	8153	W125 5K36 1% 0805 SMT RES
R149	8131	W500 10R 5% 1210 SMT RES
R150	8131	W500 10R 5% 1210 SMT RES
R151	7626	W100 100K0 1% 0805 SMT RES
R152	7624	W100 100R 1% 0805 SMT RES
R153	7820	W100 499R 1% 0805 SMT RES
R154	7820	W100 499R 1% 0805 SMT RES
R155	7621	W100 1K0 1% 0805 SMT RES
R156	7621	W100 1K0 1% 0805 SMT RES
R157	7637	W125 3K32 1% 0805 SMT RES
R158	7745	W125 0R 5% 0805 SMT RES
R159	7675	W125 1K21 1% 0805 SMT RES
R160	7626	W100 100K0 1% 0805 SMT RES
R161	8095	1W00 10K 5% 2512 SMT RES
R162	7852	W250 10R 5% 1206 SMT RES
R163	7624	W100 100R 1% 0805 SMT RES
R164	7739	W250 1R 5% 1206 SMT RES
R165	7628	W100 15K0 1% 0805 SMT RES
R166	8137	W125 1K62 1% 0805 SMT RES
R167	7634	W100 20K5 1% 0805 SMT RES
R168	7624	W100 100R 1% 0805 SMT RES
R169	7637	W125 3K32 1% 0805 SMT RES
R170	7631	W100 2K21 1% 0805 SMT RES
R171	4995	W125 14K0 1% 0805 SMT RES
R172	7852	W250 10R 5% 1206 SMT RES
R173	7821	W125 10R0 1% 0805 SMT RES
R174	7672	W125 348R0 1% 0805 SMT RES
R175	8160	W125 91K 5% 0805 SMT RES
R176	7759	W250 100K 5% 1206 SMT RES
R177	7759	W250 100K 5% 1206 SMT RES
R178	8160	W125 91K 5% 0805 SMT RES
R179	7821	W125 10R0 1% 0805 SMT RES
R180	7821	W125 10R0 1% 0805 SMT RES
R181	7672	W125 348R0 1% 0805 SMT RES
R182	7821	W125 10R0 1% 0805 SMT RES
R183	8160	W125 91K 5% 0805 SMT RES
R184	8160	W125 91K 5% 0805 SMT RES
R185	7821	W125 10R0 1% 0805 SMT RES
R186	7821	W125 10R0 1% 0805 SMT RES
R187	7821	W125 10R0 1% 0805 SMT RES
R188	7821	W125 10R0 1% 0805 SMT RES
R189	7672	W125 348R0 1% 0805 SMT RES
R190	8137	W125 1K62 1% 0805 SMT RES
R191	8137	W125 1K62 1% 0805 SMT RES
R192	7759	W250 100K 5% 1206 SMT RES
R193	7759	W250 100K 5% 1206 SMT RES
R194	7759	W250 100K 5% 1206 SMT RES
R195	7759	W250 100K 5% 1206 SMT RES
R200	7900	W125 30K 0.5% 0805 SMT RES
R201	4966	W125 40K2 1% 0805 SMT RES
R202	7626	W100 100K0 1% 0805 SMT RES
R203	7630	W100 182K 1% 0805 SMT RES
R204	7625	W100 10K0 1% 0805 SMT RES
R205	7621	W100 1K0 1% 0805 SMT RES
R206	7634	W100 20K5 1% 0805 SMT RES
R207	7928	W125 10K00 0.1% 0805 SMT RES
R208	7670	W125 47R5 1% 0805 SMT RES
R209	7634	W100 20K5 1% 0805 SMT RES
R210	8051	W125 68K 5% 0805 SMT RES
R211	7928	W125 10K00 0.1% 0805 SMT RES
R212	4966	W125 40K2 1% 0805 SMT RES
R213	7822	W100 7K50 1% 0805 SMT RES
R214	7623	W125 1M50 1% 0805 SMT RES
R215	7635	W100 221R 1% 0805 SMT RES
R216	6622	10R 20% THERMISTOR NTC
R217	8008	W250 10K 5% ANTISURGE 0805 SMT RES
R218	7634	W100 20K5 1% 0805 SMT RES
R219	7621	W100 1K0 1% 0805 SMT RES
R220	8182	W125 22K 5% 0805 SMT RES
R221	7635	W100 221R 1% 0805 SMT RES
R222	7822	W100 7K50 1% 0805 SMT RES
R223	7622	W100 1M0 1% 0805 SMT RES
R224	7635	W100 221R 1% 0805 SMT RES
R225	7865	W125 150K 5% 0805 SMT RES
R226	8189	W125 4K02 0.1% 0805 SMT RES
R227	8228	W125 75K 1% 0805 SMT RES
R228	7865	W125 150K 5% 0805 SMT RES
R229	7681	W125 8K25 1% 0805 SMT RES
R230	8189	W125 4K02 0.1% 0805 SMT RES
R231	7634	W100 20K5 1% 0805 SMT RES
R232	5074	W125 41K2 1% 0805 SMT RES
R233	7626	W100 100K0 1% 0805 SMT RES
R234	7626	W100 100K0 1% 0805 SMT RES
R235	7865	W125 150K 5% 0805 SMT RES
R236	8189	W125 4K02 0.1% 0805 SMT RES
R237	8228	W125 75K 1% 0805 SMT RES
R238	7634	W100 20K5 1% 0805 SMT RES
R239	7681	W125 8K25 1% 0805 SMT RES
R240	7682	W125 17K8 1% 0805 SMT RES
R241	7796	W063 1K37 1% 0603 SMT RES
R242	7673	W100 475R 1% 0805 SMT RES
R243	7865	W125 150K 5% 0805 SMT RES
R244	8189	W125 4K02 0.1% 0805 SMT RES
R245	7626	W100 100K0 1% 0805 SMT RES
R246	4966	W125 40K2 1% 0805 SMT RES
R247	5000	W125 140K 1% 0805 SMT RES
R248	7646	W125 681R 1% 0805 SMT RES
R249	7622	W100 1M0 1% 0805 SMT RES
R250	7629	W125 150K0 1% 0805 SMT RES
R251	7820	W100 499R 1% 0805 SMT RES
R252	7820	W100 499R 1% 0805 SMT RES
R253	7626	W100 100K0 1% 0805 SMT RES
R254	7626	W100 100K0 1% 0805 SMT RES
R255	8182	W125 22K 5% 0805 SMT RES
R256	8199	W125 34K0 1% 0805 SMT RES
R257	8228	W125 75K 1% 0805 SMT RES
R258	8199	W125 34K0 1% 0805 SMT RES
R259	8228	W125 75K 1% 0805 SMT RES
R260	7628	W100 15K0 1% 0805 SMT RES
R261	7624	W100 100R 1% 0805 SMT RES
R262	4974	W125 45K3 1% 0805 SMT RES
R263	7852	W250 10R 5% 1206 SMT RES
R264	4974	W125 45K3 1% 0805 SMT RES
R265	7759	W250 100K 5% 1206 SMT RES
R266	7759	W250 100K 5% 1206 SMT RES
R267	7626	W100 100K0 1% 0805 SMT RES
R268	7626	W100 100K0 1% 0805 SMT RES
R269	8189	W125 4K02 0.1% 0805 SMT RES
R270	5061	W125 2K87 1% 0805 SMT RES
R271	7679	W100 4K99 1% 0805 SMT RES
R272	6619	10K 5% THERMISTOR VISH NTC
R273	8189	W125 4K02 0.1% 0805 SMT RES
R274	8189	W125 4K02 0.1% 0805 SMT RES
R275	7633	W100 2K74 1% 0805 SMT RES
R276	8189	W125 4K02 0.1% 0805 SMT RES
R277	7852	W250 10R 5% 1206 SMT RES
R278	7626	W100 100K0 1% 0805 SMT RES
R279	7626	W100 100K0 1% 0805 SMT RES
R280	7639	W100 357K 1% 0805 SMT RES
R281	7624	W100 100R 1% 0805 SMT RES
R282	7672	W125 348R0 1% 0805 SMT RES
R283	8008	W250 10K 5% ANTISURGE 0805 SMT RES
R284	8157	1W00 47K 5% 2512 SMT RES
R285	8157	1W00 47K 5% 2512 SMT RES
R288	7636	W100 27K4 1% 0805 SMT RES
R292	7759	W250 100K 5% 1206 SMT RES
R293	7759	W250 100K 5% 1206 SMT RES
SHLD1	1667	PSAMP TRANSISTOR SHIELD PAD
SHLD2	1668	PSAMP EMI SHIELD CASE
T1	1249	XFMR O/P 400W PQ40/40 PS10,12,15P
T2	8188	XF3955 GATE DRIVE XFMR SMT
T3	8188	XF3955 GATE DRIVE XFMR SMT
TP1	8002	TEST POINT MINIATURE SMT
TP2	8002	TEST POINT MINIATURE SMT
TP3	8002	TEST POINT MINIATURE SMT
TP4	8002	TEST POINT MINIATURE SMT
TP5	8002	TEST POINT MINIATURE SMT
TP6	8002	TEST POINT MINIATURE SMT
TP7	8002	TEST POINT MINIATURE SMT
TP8	8002	TEST POINT MINIATURE SMT
TP9	8002	TEST POINT MINIATURE SMT
TP10	8002	TEST POINT MINIATURE SMT
TP11	8002	TEST POINT MINIATURE SMT
TP12	8002	TEST POINT MINIATURE SMT
TP13	8002	TEST POINT MINIATURE SMT
TP14	8002	TEST POINT MINIATURE SMT
TP15	8002	TEST POINT MINIATURE SMT
TP16	8002	TEST POINT MINIATURE SMT
TP17	8002	TEST POINT MINIATURE SMT
TP18	8002	TEST POINT MINIATURE SMT
TP19	8002	TEST POINT MINIATURE SMT
TP20	8002	TEST POINT MINIATURE SMT
TP21	8002	TEST POINT MINIATURE SMT
U1	7949	ZXGD3002E6 GATE DRVR 9A SMT SOT326
U2	6666	LM5008A 100V REG 0A35 BUCK SW SMT
U3	7949	ZXGD3002E6 GATE DRVR 9A SMT SOT326
U4	7828	LM13700M XCONDUCTANC AMP SMT IC
U5	7884	IRS20957S DIG AUDIO DRVR SMT SOIC
U6	8107	FOD814A OPTO-COUPLER 4P SMT IC
U7	7949	ZXGD3002E6 GATE DRVR 9A SMT SOT326
U8	7949	ZXGD3002E6 GATE DRVR 9A SMT SOT326
U9	7884	IRS20957S DIG AUDIO DRVR SMT SOIC
U10	6767	AD825 HS OPAMP JFET SO-8 SMT
U11	8121	CNY17F-2S OPTO-COUPLER 6P SMT IC
U12	7668	MC33079D QUAD OPAMP SMT SO14
U13	7668	MC33079D QUAD OPAMP SMT SO14
U14	7884	IRS20957S DIG AUDIO DRVR SMT SOIC
U15	7812	SN74AHC1G86 SINGLE XOR SMT SOT235
U16	8124	TLV3201 SNGLE COMPARATOR SMT SOT235
U17	7993	TL071CDR OPAMP JFET 3MHZ SO-8 SMT
U18	7812	SN74AHC1G86 SINGLE XOR SMT SOT235
U19	6652	MIC4424YM DUAL MOSFET DRVR SMT S08
U20	6652	MIC4424YM DUAL MOSFET DRVR SMT S08
U21	6666	LM5008A 100V REG 0A35 BUCK SW SMT
U22	6652	MIC4424YM DUAL MOSFET DRVR SMT S08
U23	6651	LM5020-2 CURR MOD PWM SMT IC SSOP10
U24	7659	LM339M QUAD SS COMP SMT SO-14
U25	7661	LM393D DUAL COMPARATOR SMT SO-8
U26	7661	LM393D DUAL COMPARATOR SMT SO-8
U27	7661	LM393D DUAL COMPARATOR SMT SO-8
U202	8158	LNK306G OFFLINE SWITCH SMT SMD8B
U205	7987	UCC25600 RES MODE CTRL SMT SO8
W1	4208	10 CIR SOCKT DIL RA 0.1
W2	4167	2X2PIN 4.2MM RA HEADER VAL-U-LOK
W201	4146	3 PIN POWER PIN HEADER MALE POLZED
ZD3	7973	BAS316 100V 0A25 DIODE SOD323 SMT
ZD201	8159	SMAZ18-13-F 18V0 1W0 5% SMT ZEN

M1529 Parts Reference List 7/4/2018

REF	YS #	Description	REF	YS #	Description	REF	YS #	Description
C1	7871	470P 50V 5%CAP 0603 SMT NPO	D1	7750	CDSF4148 75V 0A15 1005 SMT	R47	7708	W100 200R 1% 0805 SMT RES
C2	7871	470P 50V 5%CAP 0603 SMT NPO	D2	7750	CDSF4148 75V 0A15 1005 SMT	R48	7625	W100 10K0 1% 0805 SMT RES
C3	5979	100N 50V 5%CAP 0805 SMT X7R	D5	7750	CDSF4148 75V 0A15 1005 SMT	R49	7625	W100 10K0 1% 0805 SMT RES
C4	5979	100N 50V 5%CAP 0805 SMT X7R	D6	7893	MBRA340T3 40V 3A SHTKY 403D SMT	R50	7625	W100 10K0 1% 0805 SMT RES
C5	7966	__2N7 100V 10%CAP 0805 SMT X7R	D7	7831	MM3Z15VT1G 15V0 0W2 5% SMT ZEN	R51	7625	W100 10K0 1% 0805 SMT RES
C6	7966	__2N7 100V 10%CAP 0805 SMT X7R	D8	7750	CDSF4148 75V 0A15 1005 SMT	R52	7863	W125 33K 5% 0805 SMT RES
C7	8139	_22U 25V 20%CAP 1210 SMT X7R	D9	7750	CDSF4148 75V 0A15 1005 SMT	R53	7863	W125 33K 5% 0805 SMT RES
C8	8139	_22U 25V 20%CAP 1210 SMT X7R	D10	7750	CDSF4148 75V 0A15 1005 SMT	R54	7860	W125 4K7 5% 0805 SMT RES
C9	7819	_10U 10V 10%CAP 1206 SMT X5R	D11	7750	CDSF4148 75V 0A15 1005 SMT	R55	7621	W100 1K0 1% 0805 SMT RES
C10	7819	_10U 10V 10%CAP 1206 SMT X5R	D12	7750	CDSF4148 75V 0A15 1005 SMT	R56	7621	W100 1K0 1% 0805 SMT RES
C11	7819	_10U 10V 10%CAP 1206 SMT X5R	D13	7750	CDSF4148 75V 0A15 1005 SMT	R57	7621	W100 1K0 1% 0805 SMT RES
C12	7819	_10U 10V 10%CAP 1206 SMT X5R	D14	7914	MMBZ5231B 5V1 0W35 5% SMT ZEN	R58	7624	W100 100R 1% 0805 SMT RES
C13	7819	_10U 10V 10%CAP 1206 SMT X5R	D15	7914	MMBZ5231B 5V1 0W35 5% SMT ZEN	R59	7673	W100 475R 1% 0805 SMT RES
C14	7767	100N 16V 10%CAP 0603 SMT X7R	D16	8080	SMAJ150CA 150V 400W BIDIR SMT	R60	7673	W100 475R 1% 0805 SMT RES
C15	7766	_15P 50V 5%CAP 0603 SMT NPO	D17	7832	MM3Z18VT1G 18V0 0W2 5% SMT ZEN	R61	7673	W100 475R 1% 0805 SMT RES
C16	8139	_22U 25V 20%CAP 1210 SMT X7R	D18	7832	MM3Z18VT1G 18V0 0W2 5% SMT ZEN	R62	7673	W100 475R 1% 0805 SMT RES
C17	5979	100N 50V 5%CAP 0805 SMT X7R	J1	4090	1/4IN &XLR PCB MT VERT COMBO NCJ6-V	R63	7621	W100 1K0 1% 0805 SMT RES
C18	7767	100N 16V 10%CAP 0603 SMT X7R	J2	4100	XLR MALE PCB MT VERT	R64	7898	W125 1K02 0.1% 0805 SMT RES
C19	5979	100N 50V 5%CAP 0805 SMT X7R	J4	4063	1/4IN ISO JCK PCMT VT STER RT SWT	R65	7823	W100 18K2 1% 0805 SMT RES
C20	5979	100N 50V 5%CAP 0805 SMT X7R	J5	3466	RCA DUAL PCB MT VERT GOLD 24MM	R66	7856	W125 470R 5% 0805 SMT RES
C21	5979	100N 50V 5%CAP 0805 SMT X7R	J6	4010	XLR FEML PCB MT VERT 24MM AA-SERIES	R67	7621	W100 1K0 1% 0805 SMT RES
C22	5979	100N 50V 5%CAP 0805 SMT X7R	K1	3696	RELAY 1C 02AMP DC24 006MA PC-S	R68	7728	W100 39R 5% 0805 SMT RES
C23	7767	100N 16V 10%CAP 0603 SMT X7R	L1	8101	120.0UH COIL A34 1R6 SMT	R69	7728	W100 39R 5% 0805 SMT RES
C24	5979	100N 50V 5%CAP 0805 SMT X7R	L3	7941	__8.2UH COIL 1210 SMT	R70	7633	W100 2K74 1% 0805 SMT RES
C25	7966	__2N7 100V 10%CAP 0805 SMT X7R	LD1	6405	RED 3MM LED 2V1 20MA DIFFUSD	R71	7633	W100 2K74 1% 0805 SMT RES
C26	7605	__1N5 50V 5%CAP 0805 SMT NPO	LD2	6400	YEL 3MM LED 2V1 20MA DIFFUSD	R72	7728	W100 39R 5% 0805 SMT RES
C27	7813	_47P 50V 5%CAP 0805 SMT NPO	LD3	6408	GRN 3MM LED 2V2 20MA DIFFUSD	R73	7635	W100 221R 1% 0805 SMT RES
C28	7696	_68N 50V 5%CAP 0805 SMT X7R	P1	4459	_10K B LIN 9MM DET HI TORQ P32	R76	7634	W100 20K5 1% 0805 SMT RES
C29	8139	_22U 25V 20%CAP 1210 SMT X7R	P2	4459	_10K B LIN 9MM DET HI TORQ P32	R77	7861	W125 10K 5% 0805 SMT RES
C30	7871	470P 50V 5%CAP 0603 SMT NPO	P3	4459	_10K B LIN 9MM DET HI TORQ P32	R78	7861	W125 10K 5% 0805 SMT RES
C31	5979	100N 50V 5%CAP 0805 SMT X7R	PCB1	M1529BLANK	2_OZ 2SD 77.4 SQIN 04PER PSAMP	R79	7861	W125 10K 5% 0805 SMT RES
C32	5979	100N 50V 5%CAP 0805 SMT X7R	Q1	7837	MMBT5401 PNP SOT-23 SMT	R80	7897	W125 330R 0.5% 0805 SMT RES
C33	7813	_47P 50V 5%CAP 0805 SMT NPO	Q5	7894	12.288MHZ CRYSTAL 4-PIN SMT	R88	7898	W125 1K02 0.1% 0805 SMT RES
C34	5979	100N 50V 5%CAP 0805 SMT X7R	Q8	7805	MMBT3906LT1 PNP SOT-23 SMT T&R	R89	7897	W125 330R 0.5% 0805 SMT RES
C35	7874	_10N 50V 5%CAP 1206 SMT NPO	R1	7861	W125 10K 5% 0805 SMT RES	R90	7898	W125 1K02 0.1% 0805 SMT RES
C36	8141	100U 10V 20%CAP 3528 SMT TNT	R2	7856	W125 470R 5% 0805 SMT RES	R91	7823	W100 18K2 1% 0805 SMT RES
C37	8139	_22U 25V 20%CAP 1210 SMT X7R	R3	7856	W125 470R 5% 0805 SMT RES	R94	7861	W125 10K 5% 0805 SMT RES
C38	5979	100N 50V 5%CAP 0805 SMT X7R	R4	7866	W125 1M 5% 0805 SMT RES	R95	5066	W125 22K1 1% 0805 SMT RES
C39	5979	100N 50V 5%CAP 0805 SMT X7R	R5	7866	W125 1M 5% 0805 SMT RES	R96	7765	W063 10R 5% 0603 SMT RES
C41	7871	470P 50V 5%CAP 0603 SMT NPO	R6	7861	W125 10K 5% 0805 SMT RES	R101	6543	48R 265V RESETTABLE THERMISTOR PTC
C42	7871	470P 50V 5%CAP 0603 SMT NPO	R7	7861	W125 10K 5% 0805 SMT RES	R102	7859	W125 2K2 5% 0805 SMT RES
C43	7603	680P 50V 5%CAP 0805 SMT C0G	R8	7899	W125 1K800 0.1% 0805 SMT RES	R103	7854	W125 47R 5% 0805 SMT RES
C44	7603	680P 50V 5%CAP 0805 SMT C0G	R9	7899	W125 1K800 0.1% 0805 SMT RES	R105	7624	W100 100R 1% 0805 SMT RES
C45	8139	_22U 25V 20%CAP 1210 SMT X7R	R10	7898	W125 1K02 0.1% 0805 SMT RES	R106	7897	W125 330R 0.5% 0805 SMT RES
C46	7813	_47P 50V 5%CAP 0805 SMT NPO	R11	7898	W125 1K02 0.1% 0805 SMT RES	S1	3522	DPDT MINI PC VERT SNP ALT
C47	7813	_47P 50V 5%CAP 0805 SMT NPO	R12	7679	W100 4K99 1% 0805 SMT RES	S8	3522	DPDT MINI PC VERT SNP ALT
C48	5979	100N 50V 5%CAP 0805 SMT X7R	R13	7765	W063 10R 5% 0603 SMT RES	S9	3522	DPDT MINI PC VERT SNP ALT
C49	5979	100N 50V 5%CAP 0805 SMT X7R	R14	7864	W125 100K 5% 0805 SMT RES	U1	7817	33078 DUAL OPAMP SMT SO-8
C50	5979	100N 50V 5%CAP 0805 SMT X7R	R15	4952	W125 10K2 1% 0805 SMT RES	U2	7817	33078 DUAL OPAMP SMT SO-8
C51	5979	100N 50V 5%CAP 0805 SMT X7R	R16	7765	W063 10R 5% 0603 SMT RES	U3	8122	PCM1796 DAC STEREO DIFF SSOP28 SMT
C52	7813	_47P 50V 5%CAP 0805 SMT NPO	R17	7765	W063 10R 5% 0603 SMT RES	U5	7918	LM1117 REGULATOR 5V0 SMT SOT223
C53	5979	100N 50V 5%CAP 0805 SMT X7R	R18	7765	W063 10R 5% 0603 SMT RES	U6	7890	LM2671 3V3 REG 0A5 SMT SO8
C54	5979	100N 50V 5%CAP 0805 SMT X7R	R19	7765	W063 10R 5% 0603 SMT RES	U7	7906	MC9S08GT60 MICROCNTRLLER SMT QFP44
C55	5979	100N 50V 5%CAP 0805 SMT X7R	R20	7861	W125 10K 5% 0805 SMT RES	U8	7905	ADAU1701 28/56 DSP 2AD4DA SMT IC
C56	7605	__1N5 50V 5%CAP 0805 SMT NPO	R21	7621	W100 1K0 1% 0805 SMT RES	U9	7668	MC33079D QUAD OPAMP SMT SO14
C57	7798	_15N 50V 5%CAP 0805 SMT C0G	R22	7928	W125 10K00 0.1% 0805 SMT RES	U10	7817	33078 DUAL OPAMP SMT SO-8
C58	7798	_15N 50V 5%CAP 0805 SMT C0G	R23	7899	W125 1K800 0.1% 0805 SMT RES	U11	7817	33078 DUAL OPAMP SMT SO-8
C65	7813	_47P 50V 5%CAP 0805 SMT NPO	R24	7861	W125 10K 5% 0805 SMT RES	U12	7669	TL072 DUAL OPAMP SMT SO-8
C66	5979	100N 50V 5%CAP 0805 SMT X7R	R25	7899	W125 1K800 0.1% 0805 SMT RES	U13	7817	33078 DUAL OPAMP SMT SO-8
C67	5979	100N 50V 5%CAP 0805 SMT X7R	R26	7899	W125 1K800 0.1% 0805 SMT RES	W2	4208	10 CIR SOCKT DIL RA 0.1
C68	5979	100N 50V 5%CAP 0805 SMT X7R	R27	5066	W125 22K1 1% 0805 SMT RES	W3	4019	10 CIR SOCKT DIL VT 0.1
C69	7878	__1U 25V 20%CAP 1206 SMT X7R	R28	7676	W100 2K0 1% 0805 SMT RES			
C70	5979	100N 50V 5%CAP 0805 SMT X7R	R29	7899	W125 1K800 0.1% 0805 SMT RES			
C71	7931	270P 50V 5%CAP 0805 SMT NPO	R30	7676	W100 2K0 1% 0805 SMT RES			
C72	8140	_15U 35V 10%CAP 6032 SMT TNT	R31	7765	W063 10R 5% 0603 SMT RES			
C73	7819	_10U 10V 10%CAP 1206 SMT X5R	R32	7928	W125 10K00 0.1% 0805 SMT RES			
C74	5979	100N 50V 5%CAP 0805 SMT X7R	R33	7898	W125 1K02 0.1% 0805 SMT RES			
C75	7767	100N 16V 10%CAP 0603 SMT X7R	R34	7928	W125 10K00 0.1% 0805 SMT RES			
C76	7767	100N 16V 10%CAP 0603 SMT X7R	R35	7765	W063 10R 5% 0603 SMT RES			
C77	7819	_10U 10V 10%CAP 1206 SMT X5R	R36	7861	W125 10K 5% 0805 SMT RES			
C78	5979	100N 50V 5%CAP 0805 SMT X7R	R37	7861	W125 10K 5% 0805 SMT RES			
C79	5979	100N 50V 5%CAP 0805 SMT X7R	R38	7633	W100 2K74 1% 0805 SMT RES			
C80	7819	_10U 10V 10%CAP 1206 SMT X5R	R39	7633	W100 2K74 1% 0805 SMT RES			
C81	5979	100N 50V 5%CAP 0805 SMT X7R	R40	7898	W125 1K02 0.1% 0805 SMT RES			
C82	7694	_3N3 25V 5%CAP 0805 SMT NPO	R41	7863	W125 33K 5% 0805 SMT RES			
C83	5979	100N 50V 5%CAP 0805 SMT X7R	R42	7897	W125 330R 0.5% 0805 SMT RES			
C85	7819	_10U 10V 10%CAP 1206 SMT X5R	R43	7928	W125 10K00 0.1% 0805 SMT RES			
C86	7819	_10U 10V 10%CAP 1206 SMT X5R	R44	7633	W100 2K74 1% 0805 SMT RES			
C88	7767	100N 16V 10%CAP 0603 SMT X7R	R45	7625	W100 10K0 1% 0805 SMT RES			
C89	7767	100N 16V 10%CAP 0603 SMT X7R	R46	7673	W100 475R 1% 0805 SMT RES			

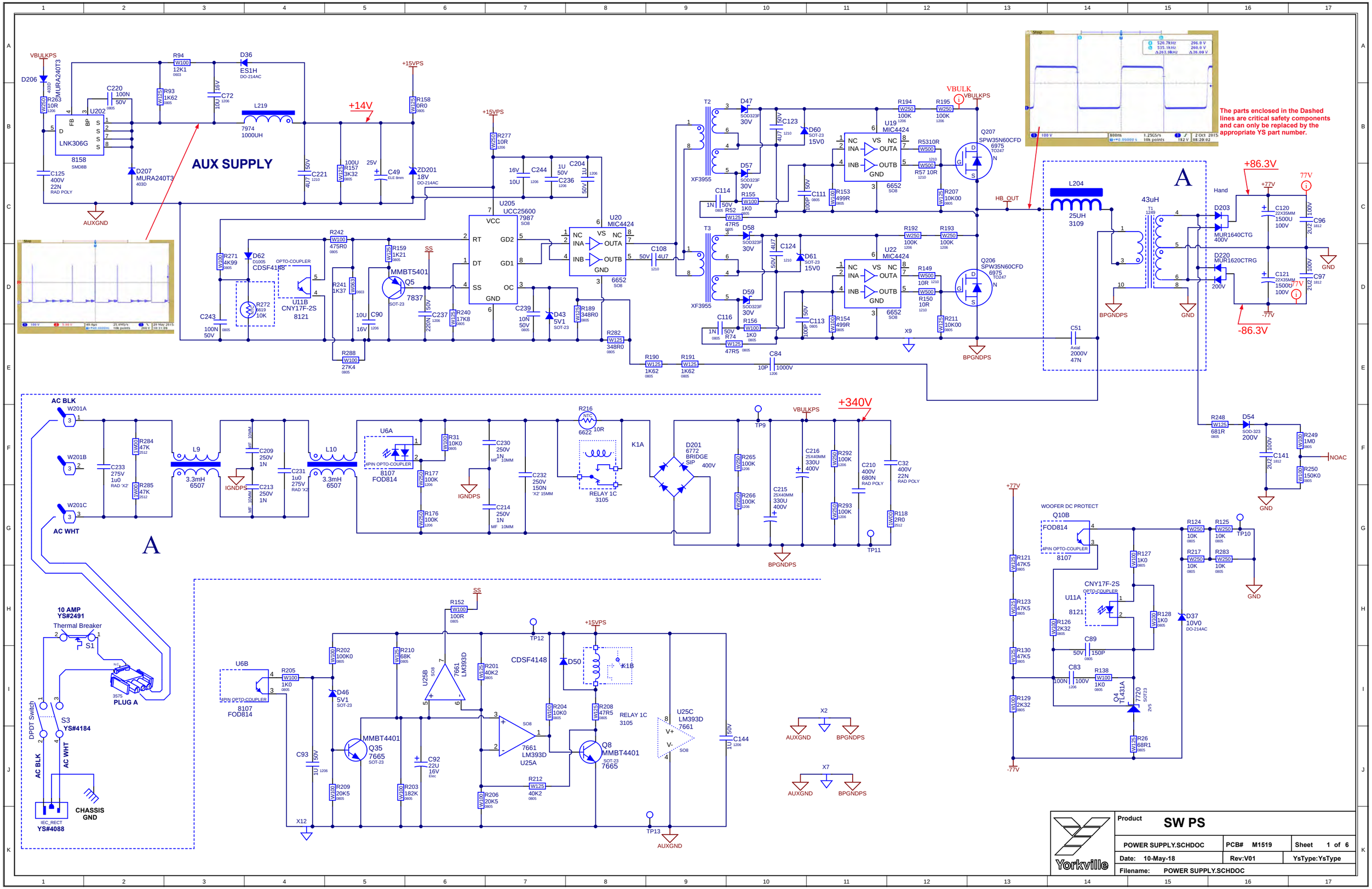
AUX SUPPLY
The parts enclosed in the Dashed lines are critical safety components and can only be replaced by the appropriate YS part number.
AC BLK
AC WHT
10 AMP
YS#2491
Thermal Breaker
PLUG A
DPDT Switch
YS#4184
CHASSIS GND
YS#4088
WOOFER DC PROTECT
Product
SW PS
POWER SUPPLY.SCHDOC
PCB# M1519
Sheet 1 of 6
Date: 10-May-18
Rev:V01
YsType:YsType
Filename: POWER SUPPLY.SCHDOC
Yorkville

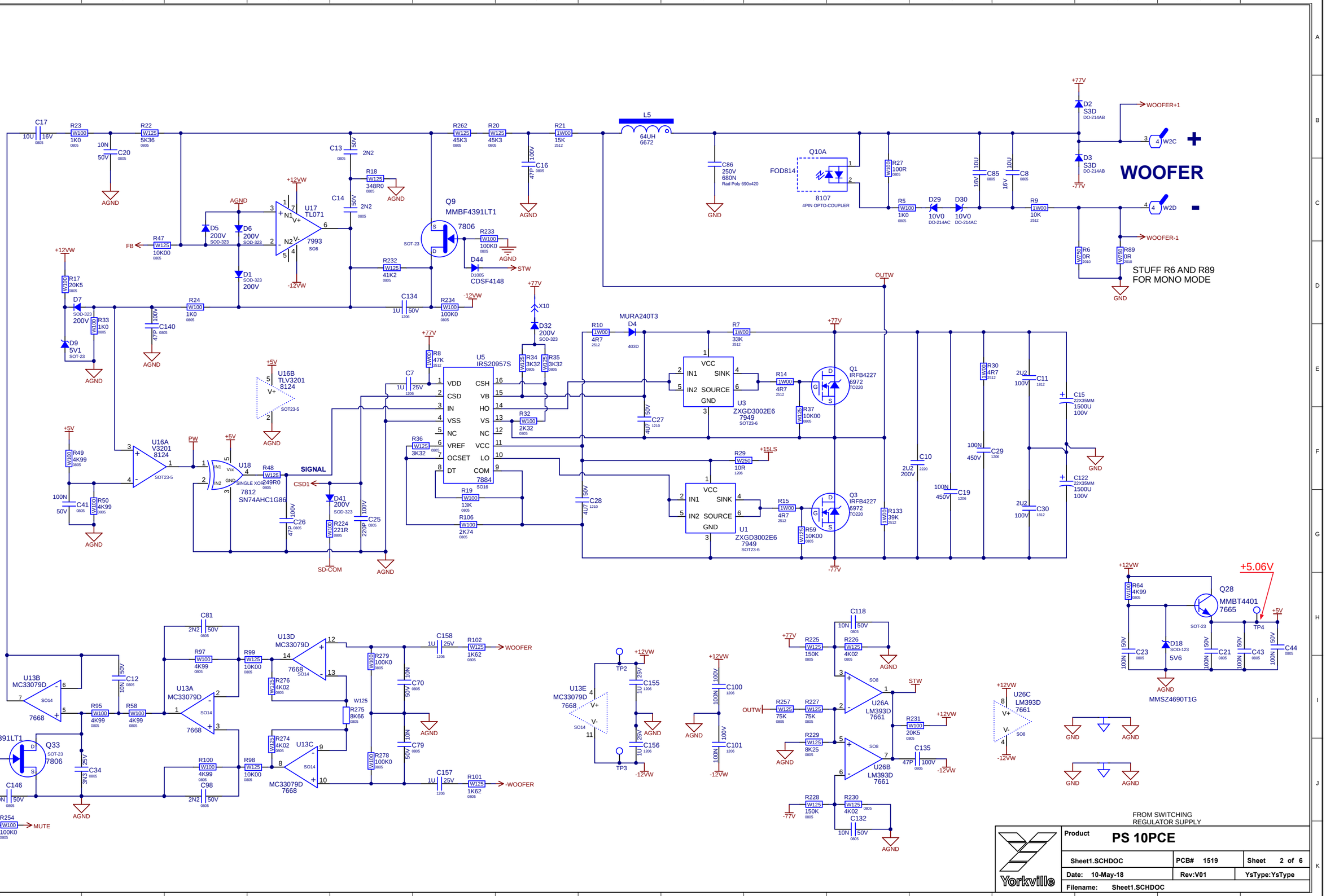
WOOFER
+
-
STUFF R6 AND R89
FOR MONO MODE
WOOFER+1
WOOFER-1
+5.06V
FROM SWITCHING
REGULATOR SUPPLY
Yorkville
Product
PS 10PCE
Sheet1.SCHDOC
PCB# 1519
Sheet 2 of 6
Date: 10-May-18
Rev:V01
YsType:YsType
Filename: Sheet1.SCHDOC

FOR PS10P ALL COMPONENTS ENCLOSED ARE DNS

BI AMP WOOFER

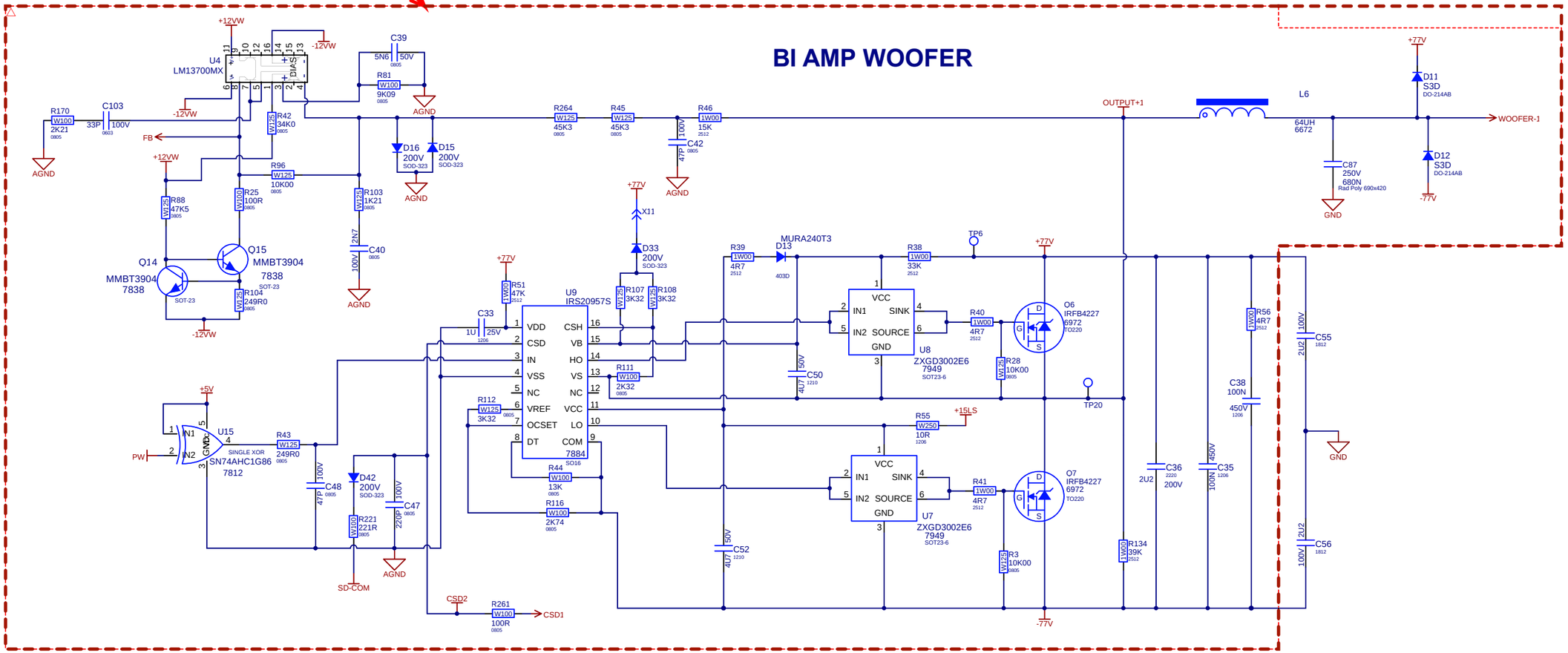

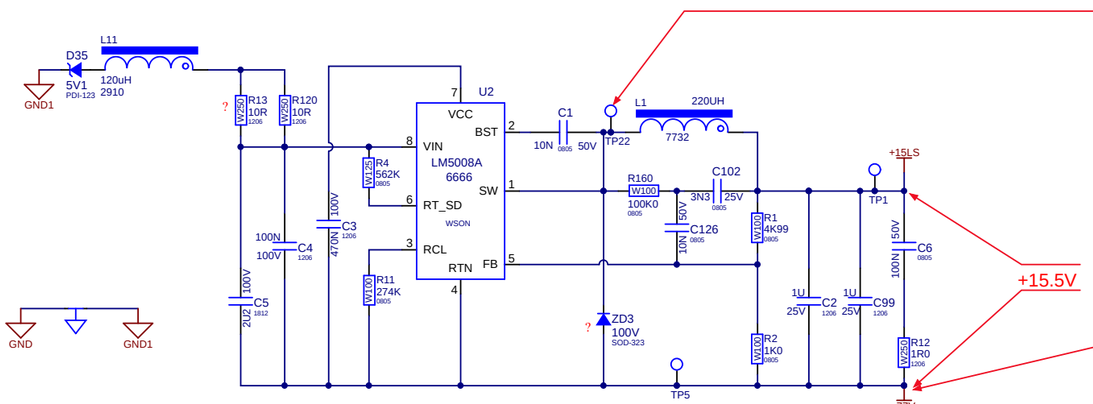

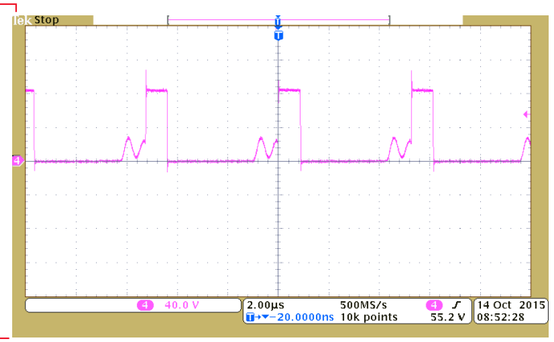

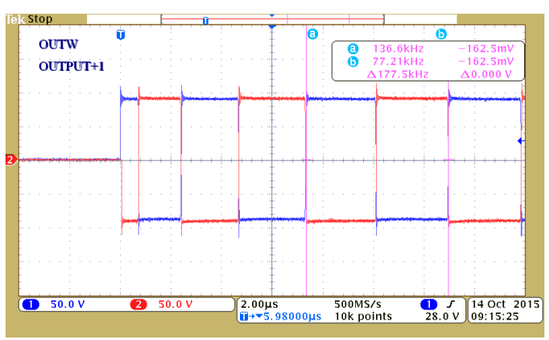

Yorkville

Product	**PS 10PCE**		
SheeT2.SCHDOC	PCB# M1519	Sheet 3 of 6	
Date: 10-May-18	Rev:V01	YsType:YsType	
Filename: SheeT2.SCHDOC			

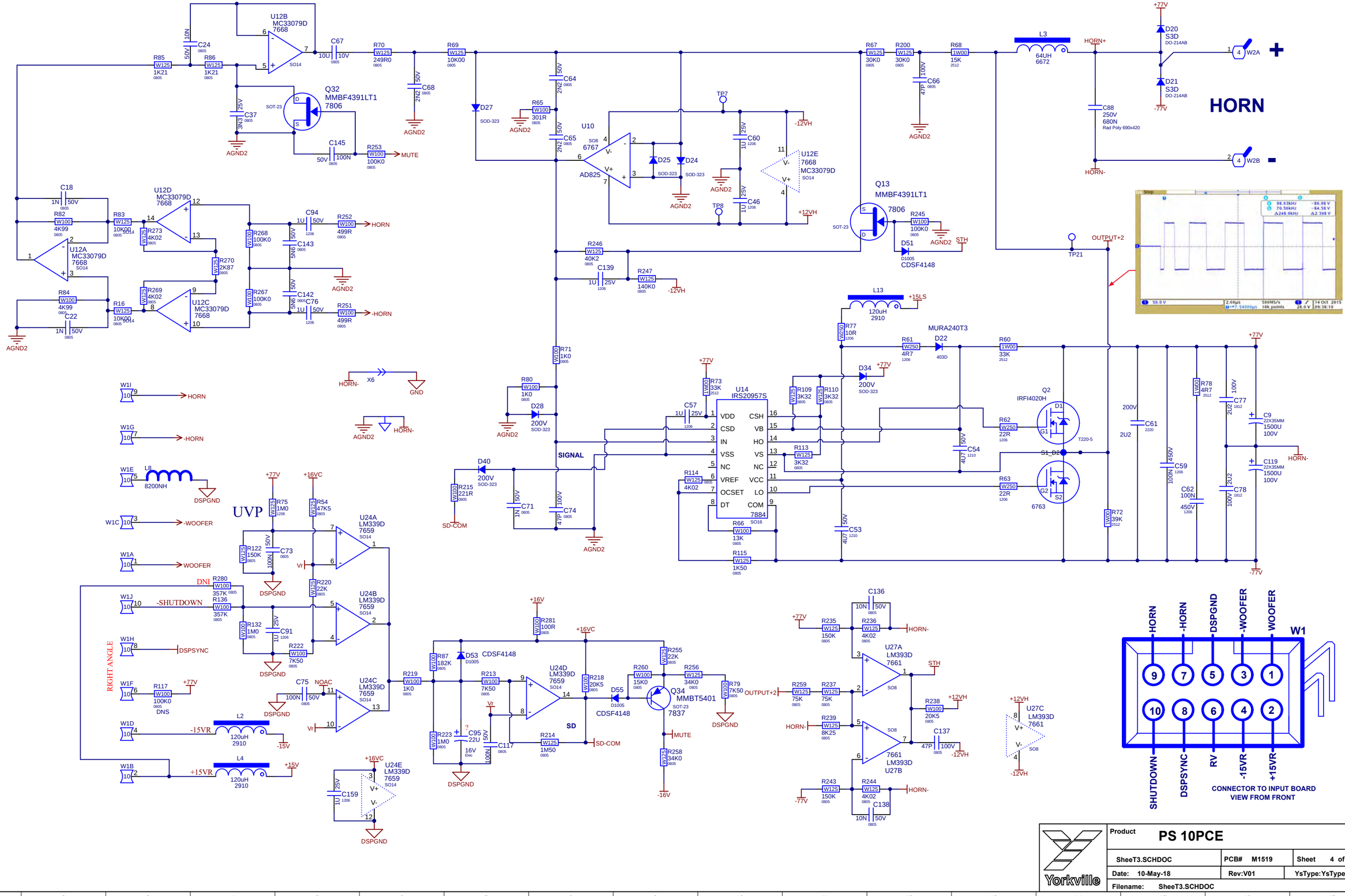

Product	PS 10PCE		
SheeT3.SCHDOC	PCB# M1519	Sheet 4 of 6	
Date: 10-May-18	Rev:V01	YsType:YsType	
Filename: SheeT3.SCHDOC			

Yorkville

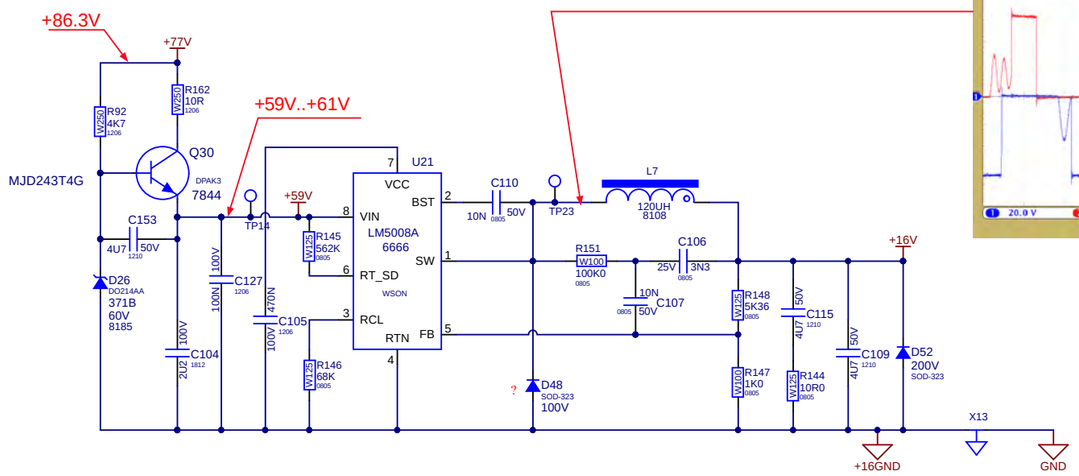

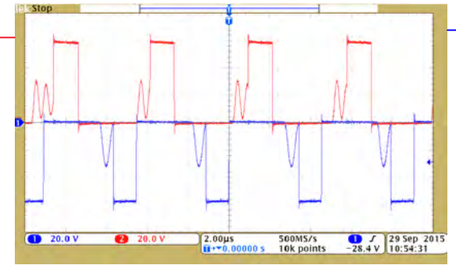

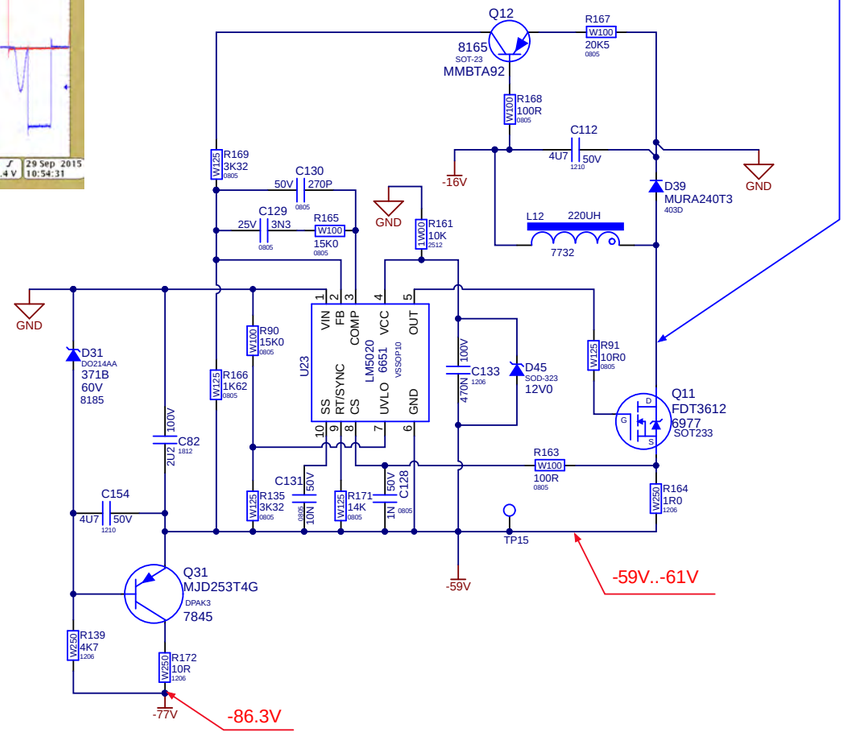

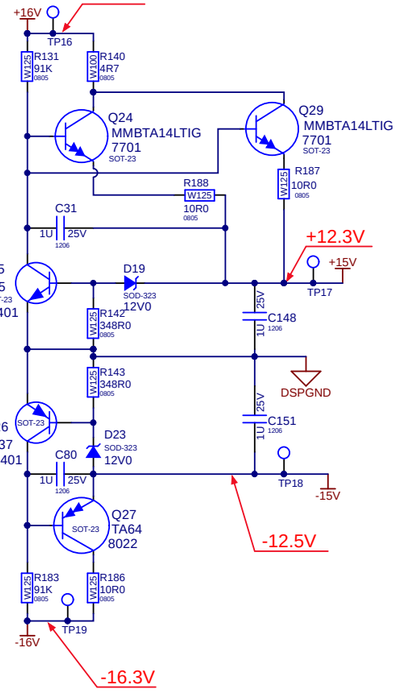

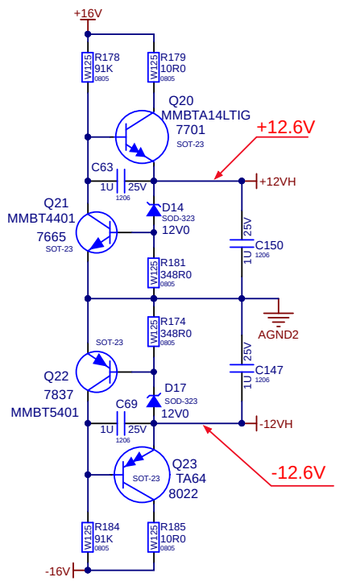

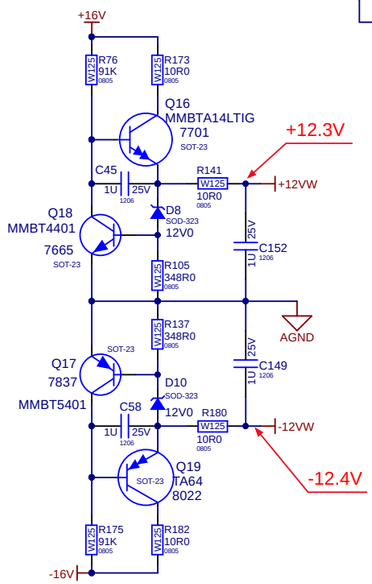

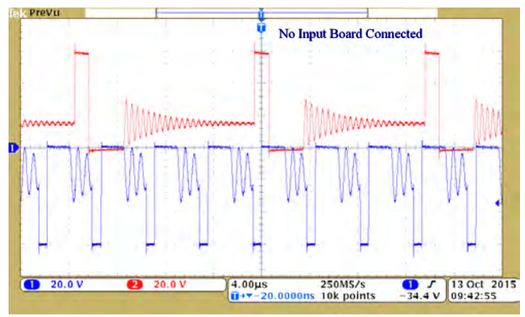

Yorkville	Section: LV Pwr Supply				
	Product(s): PS10PCE				
	PCB#: M1519	Rev#: V01	EML Rev#: 01	Sheet 5 Of 6	
	Modified: 10-May-18	File: LV-PS.SchDoc		Tmp Rev: TemplateRev	

DESIGN HISTORY AND INFORMATION

CHANGE HISTORY

#	DATE	VER#	PC#	DESCRIPTION OF CHANGE
1	19-JAN-2018	V01	.	RELEASED FOR PRODUCTION
2	10-MAY-2018	.	9222	CHANGE R275 VALUE FROM 2K74 (#7633) TO 8K66 (#8321)
3	.	.	.	.
4	.	.	.	.
5	.		.	.
6	.	.	.	.
7	.	.	.	.
8	.	.	.	.
9	.	.	.	.
10	.	.	.	.
11	.	.	.	.
12	.	.	.	.
13	.	.	.	.

#	DATE	VER#	PC#	DESCRIPTION OF CHANGE
1	.	.	.	.
2	.	.	.	.
3	.	.	.	.
4	.	.	.	.
5	.	.	.	.
6	.	.	.	.
7	.	.	.	.
8	.	.	.	.
9	.	.	.	.
10	.	.	.	.
11	.	.	.	.
12	.	.	.	.
13	.	.	.	.

#	DATE	VER#	PC#	DESCRIPTION OF CHANGE
1	.	.	.	.
2	.	.	.	.
3	.	.	.	.
4	.	.	.	.
5	.	.	.	.
6	.	.	.	.
7	.	.	.	.
8	.	.	.	.
9	.	.	.	.
10	.	.	.	.
11	.	.	.	.
12	.	.	.	.
13	.	.	.	.

POTENTIOMETERS AND KNOBS

POTENTIOMETERS AND KNOBS			
REF	FUNCTION	POT#	KNOB#
.	.	.	.
.	.	.	.
.	.	.	.
.	.	.	.
.	.	.	.
.	.	.	.
.	.	.	.
.	.	.	.
.	.	.	.
.	.	.	.
.	.	.	.
.	.	.	.
.	.	.	.
.	.	.	.

PINOUT DIAGRAMS

THIS SHEET CONTAINS A CHANGE HISTORY LOG, A LIST OF THE POTS & KNOBS AND A LEADS & PINS REFERENCE SECTION.

Yorkville

Section: Design Information And History
Product(s): PS10PCE
PCB#: M1519 | Rev#: V01 | EML Rev#: 01 | Sheet 6 Of 6
Modified: 10-May-18 | File: History.SchDoc | Tmp Rev: TemplateRev

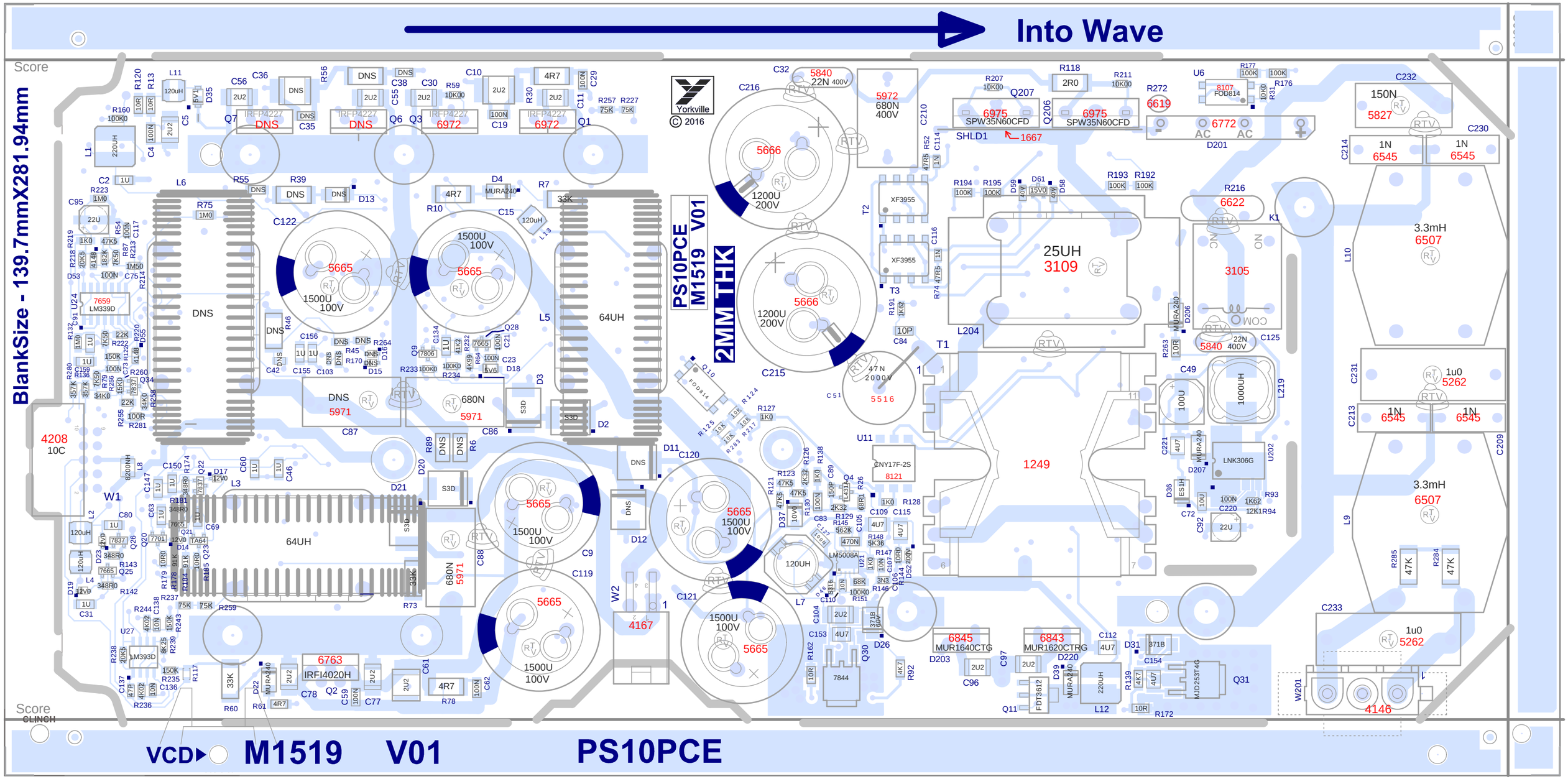

Into Wave
BlankSize - 139.7mmX281.94mm
PS10PCE
M1519 V01
2MM THK
Yorkville
© 2016
VCD
M1519 V01
PS10PCE

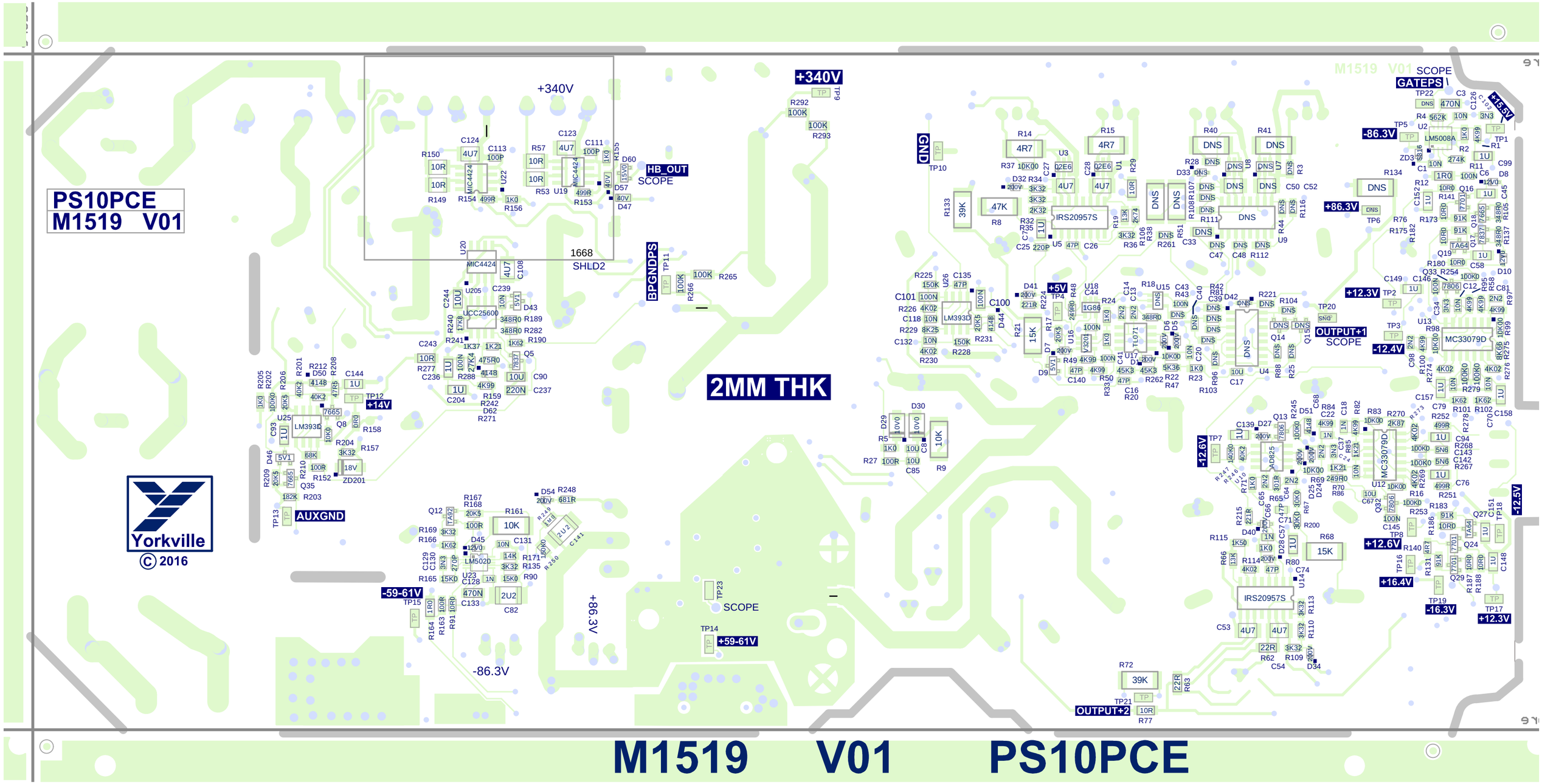
PS10PCE
M1519 V01
+340V
HB_OUT
SCOPE
1668
SHLD2
BPGNDPS
2MM THK
GND
GATEPS
+15.5V
-86.3V
+86.3V
+12.3V
-12.4V
OUTPUT+1
SCOPE
+5V
+14V
AUXGND
-59-61V
+59-61V
-86.3V
+86.3V
-12.6V
+12.6V
+16.4V
-16.3V
+12.3V
-12.5V
OUTPUT+2
Yorkville
© 2016
M1519 V01 PS10PCE

PCB PRE-ASSEMBLY DOCUMENTATION

USE THESE NOTES TO ASSEMBLE OR PREPARE PARTS
BEFORE INSERTING INTO PCB AND ALSO PRIOR TO WAVE

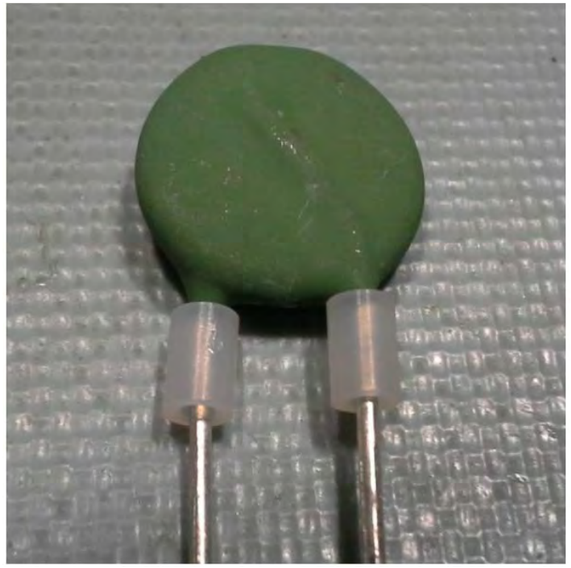

FOR YS PN 6622 USE NYLON SPACER PN 8607

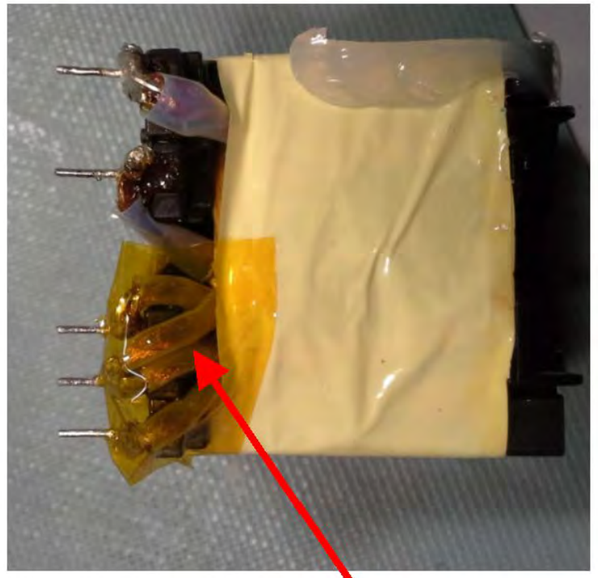

APPLY 1" WIDE KAPTON TAPE OVER PIN AND LEADS ON T1

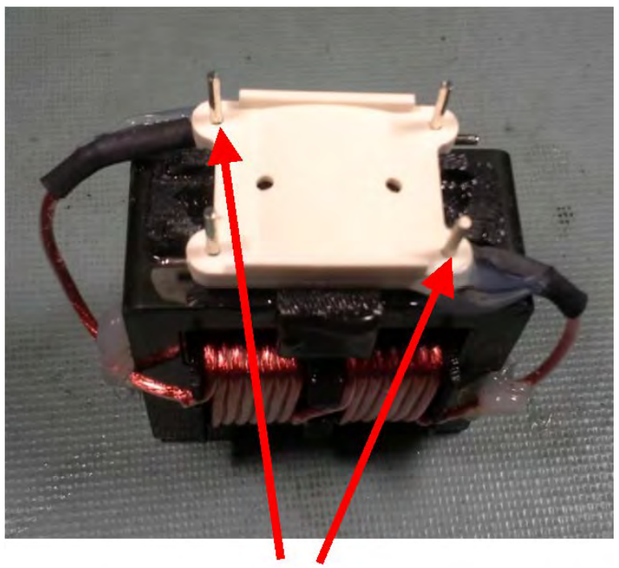

DO NOT GET SILICONE ON PINS

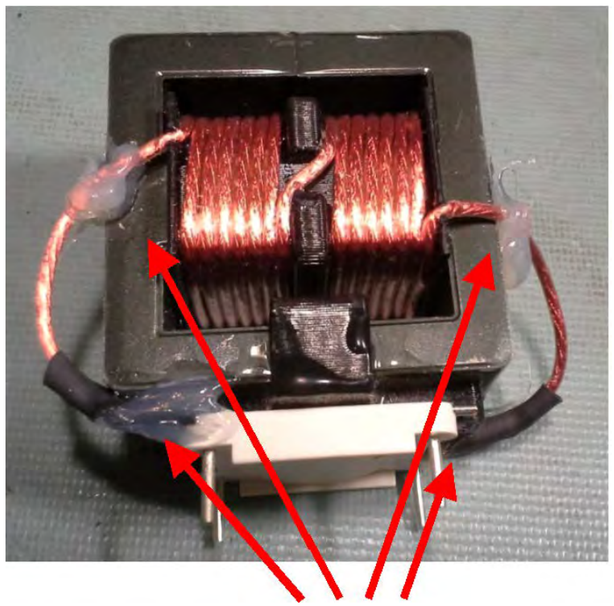

SILICONE APPLIED TO 4 PLACES ON L204

THIS SHEET CONTAINS SPECIAL PRODUCTION NOTES AND A LIST OF PCB HARDWARE PARTS REQUIRED FOR THE BUILD.

Yorkville	Section: Assembly Documentation				
	Product(s): PS10PCE				
	PCB#: M1519	Rev#: V01	EML Rev#: 01	Sheet 7 Of 8	
	Modified: 10-May-18	File: Pre-Assembly.SchDoc		Tmp Rev: TemplateRev	

PCB ASSEMBLY DOCUMENTATION

SPECIAL PRODUCTION NOTES

1. THERMISTOR R272 (YS# 6619) IS HAND INSERTED.

2. DO NOT STUFF COMPONENTS MARKED WITH DNS. IN THE LAYOUT PADS WITH NO COMPONENT OUTLINE OR REF DESIGNATOR ARE ALSO NOT STUFFED.

3. ADD APPROPRIATE SPACERS TO LEGS OF XTRS AND RECTIFIERS AS INDICATD IN PICS 1-3.
   SEE ALSO PRE-ASSEMBLY NOTES

4. CUT LEADS SHORT ON ALL HAND PLACED TRANSISTORS.

5. NOTE THAT THIS BOARD USES A WAVE SHIELD THAT REQUIRES THE SOLDER WAVE BE SET TO THE PROPER HEIGHT AND SPEED.

6. AFTER WAVE SOLDER. PLACE SHLD2 (YS#1668) ON BOTTOM OF BOARD AND HAND SOLDER.

7. APPLY RTV WHERE INDICATED AND BETWEEN TALL COMPONENTS.

8. BEFORE TRANSPORTING TO WIRING PLEASE SEPARATE BOARD FROM PANEL USING PIZZA CUTTER
   THEN BREAKING NON SCORED END GENTLY WITH APPROPRIATE TOOL



BOARDS PLACED UPSIDE DOWN ON RACK AFTER WAVE SOLDERING

PIC. 2



ADD 1 SPACER YS# 8607 TO MIDDLE REAR LEG OF Q2 AS SHOWN

PIC. 1

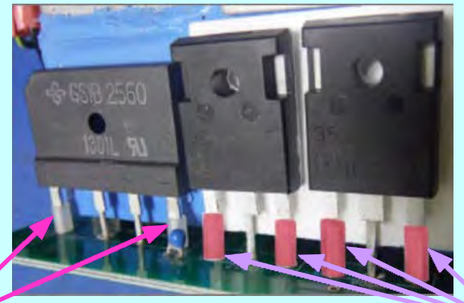

8607

ADD NUMBERS OF SPACERS YS# 8607 AND 9067 INDICATED TO LEGS SHOWN FOR D201, Q206 AND Q207

9067

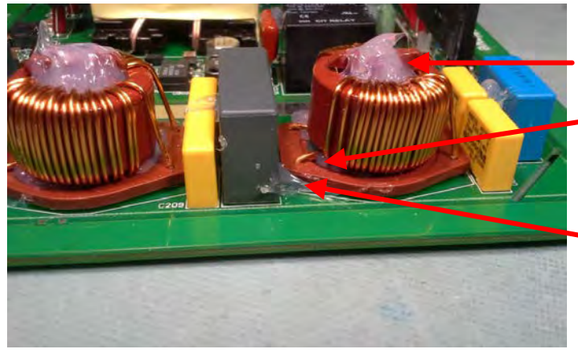

INJECT SILICONE INTO COILS, NOTE SILICONE MUST COME OUT FOR A GOOD FILL

SILICONE IS ALSO INJECTED FROM BOTTOM OF PCB, IT MUST COME OUT UNDER PART.

HAND SOLDER SHLD2 IN 4 PLACES

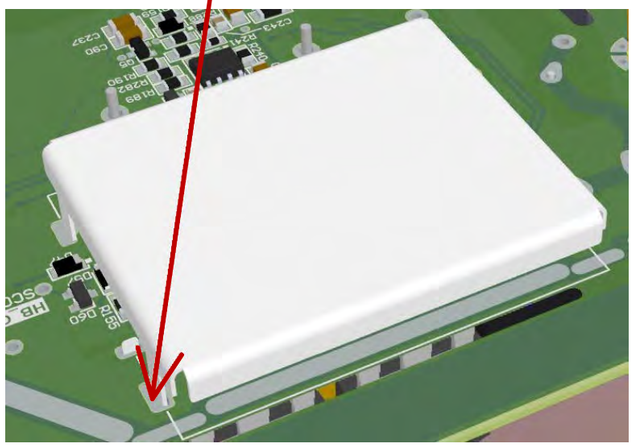

AFTER WAVE SOLDERING, SOLDER SHLD 2 TO BOTTOM OF PCB WHERE SHOWN

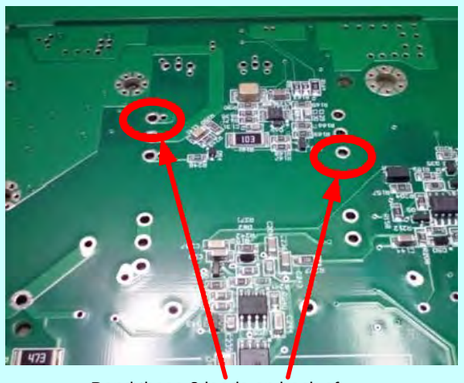

Bend these 2 leads on back of board after inserting T1 (YS# 1226)

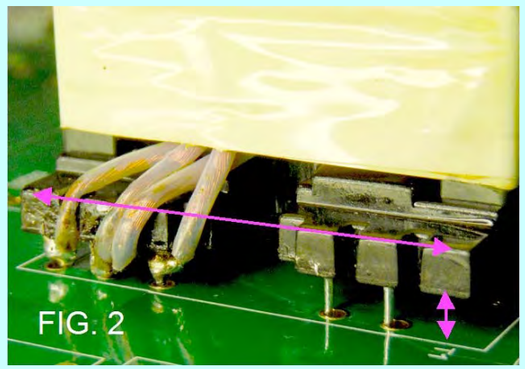

Bending the 2 leads indicated in Fig 1 should level the XFMR T1 as shown in Fig 2 above

PIC. 3

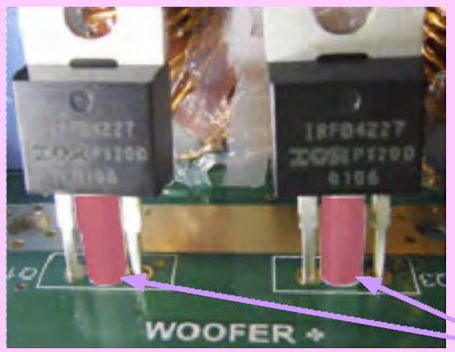

9067

ADD A #9067 SPACER TO THE MIDDLE LEG OF Q1, Q3, Q6, Q7, D203 AND D220

THIS SHEET CONTAINS SPECIAL PRODUCTION NOTES AND A LIST OF PCB HARDWARE PARTS REQUIRED FOR THE BUILD.

Yorkville	Section:	Assembly Documentation			
	Product(s):	PS10PCE			
	PCB#: M1519	Rev#: V01	EML Rev#: 01	Sheet 7 Of 8	
	Modified: 10-May-18	File: Assembly.SchDoc		Tmp Rev: TemplateRev	

DESIGN HISTORY AND INFORMATION

CHANGE HISTORY

#	DATE	VER#	PC#	DESCRIPTION OF CHANGE
1	19-JAN-2018	V01	.	RELEASED FOR PRODUCTION
2	10-MAY-2018	.	9222	CHANGE R275 VALUE FROM 2K74 (#7633) TO 8K66 (#8321)
3	.	.	.	.
4	.	.	.	.
5	.		.	.
6	.	.	.	.
7	.	.	.	.
8	.	.	.	.
9	.	.	.	.
10	.	.	.	.
11	.	.	.	.
12	.	.	.	.
13	.	.	.	.

#	DATE	VER#	PC#	DESCRIPTION OF CHANGE
1	.	.	.	.
2	.	.	.	.
3	.	.	.	.
4	.	.	.	.
5	.	.	.	.
6	.	.	.	.
7	.	.	.	.
8	.	.	.	.
9	.	.	.	.
10	.	.	.	.
11	.	.	.	.
12	.	.	.	.
13	.	.	.	.

#	DATE	VER#	PC#	DESCRIPTION OF CHANGE
1	.	.	.	.
2	.	.	.	.
3	.	.	.	.
4	.	.	.	.
5	.	.	.	.
6	.	.	.	.
7	.	.	.	.
8	.	.	.	.
9	.	.	.	.
10	.	.	.	.
11	.	.	.	.
12	.	.	.	.
13	.	.	.	.

POTENTIOMETERS AND KNOBS

POTENTIOMETERS AND KNOBS			
REF	FUNCTION	POT#	KNOB#
.	.	.	.
.	.	.	.
.	.	.	.
.	.	.	.
.	.	.	.
.	.	.	.
.	.	.	.
.	.	.	.
.	.	.	.
.	.	.	.
.	.	.	.
.	.	.	.
.	.	.	.
.	.	.	.

PINOUT DIAGRAMS

THIS SHEET CONTAINS A CHANGE HISTORY LOG, A LIST OF THE POTS & KNOBS AND A LEADS & PINS REFERENCE SECTION.

Yorkville

Section: Design Information And History
Product(s): PS10PCE
PCB#: M1519 | Rev#: V01 | EML Rev#: 01 | Sheet 6 Of 6
Modified: 10-May-18 | File: History.SchDoc | Tmp Rev: TemplateRev

AUDIO-IN
R23 1/8W 1K0 0805
R22 0.1W 7K50 0805
C17 10U 0805 16
10N C20 50V 0805
AGND
R20 1/8W 91K 0805
R21 1W00 15K 2512
47P C16 100V 0805
AGND
L5 6620 64UH
TP14
680N C86 160V
GND
Q10:A FOD814 8107
R27 W250 100R 1206
R5 1/8W 1K0 0805
+77V
S3D D2
S3D D3
-77V
10V0 D29
1W0
1W0
D30 10V0
R9 2W00 10K 2512
WOOFER-1
C8 0805 10U 16
C85 0805 10U 16
3 4 W2:C
WOOFER +
4 4 W2:D
WOOFER-1
WOOFER+1
R90 W75 0R 2010
R91 W75 0R 2010
R6 W75 0R 2010
R89 W75 0R 2010
GND
REMOVE R90 AND R91
FOR PS10P (MONO MODE)
REMOVE R6 AND R89
FOR BRIDGE MODE
+5V
U17 TL071CDR
1 NC
2
3
4 -V
7 +V
8 DIS
6 OUT
5 NC
7993
-5V
2N2 C13 50V 0805
2N2 C14 50V 0805
R18 1/8W 348R0 0805
AGND
100P C12 50V 0805
AGND
D5 200V BAV21
D6 200V BAV21
WSYNC
R37 W125 10K00 0805
+5V
R17 1W00 1K 2512
+16VF
D9 5V1 0W35
100N C21 50V 0805
AGND
FROM SWITCHING
REGULATOR SUPPLY
-5V
R25 1W00 1K 2512
-20V
100N C23 50V 0805
D10 5V1 0W35
AGND
+16VF
R87 W125 100K 0805
+77V
R54 1M0 1206 1/8W
AC SHUT DOWN
FROM POWER SUPPLY
D56 200V BAV21
D53 200V BAV21
U6:B FOD817C 6636
R24 1/8W 1K0 0805
0805 1K0 1/8W R33
+5V
BAV21 200V D7
200V D8 BAV21
AGND
+77V
200V D32 BAV21
R34 3K32 0805 1/8W
R35 3K32 0805 1/8W
1W0 R10 4R7 2512
D4 MURA240T3
+77V
1W0 R7 33K 2512
+77V
U3 VCC
IN1
IN2
ZXGD3002E6
SINK
SOURCE
GND
7949
R14 1W0 4R7 2512
IRFB4227 Q1 6972 TO220
+77V
1U C27 50V 1206
R29 W250 10R 1206
+15LS
U1 VCC
IN1
IN2
ZXGD3002E6
SINK
SOURCE
GND
7949
R15 1W0 4R7 2512
IRFB4227 Q3 6972 TO220
OUTPUT+
-77V
2U2 C10 200V 2220
100N C19 450V
100N C29 450V
GND
2U2 C11 100V 1812
R30 1W0 4R7 2512
1812 100V C30 2U2
HORN-
C31 1U 50V
C84 1U 50V
R139 681 0805 1/8W
22U C103 20V 3528
TO263-5
IN GND ADJ
(Function) LM2991SX
ON/OFF OUT
Q14 8136
R131 1/8W 8K25 0805
SD-COM
CMPT4401 Q8 7665 SMT
R122 W125 10K00 0805
R152 100K 0805 W125
100N C73 50V 0805
GND1
L10 120uH 8101
-20V
TP9
L9 120uH 8101
-20PS
C112 4U7 50V 1210
SECGND
-16V
4U7 C113 50V 1210
HORN-
DNS
R26 DNS 0805
R19 13K 0805 1/8W
R106 3K32 0805 1/8W
DNS
U5
11 VCC
8 DT
5 NC
6 VREF
7 OCSET
3 IN
2 CSD
1 VDD
4
9 COM
15 VB
12 NC
16 CSH
13 VS
14 HO
10 LO
VSS
7884 IRS20957S
R36 1/8W 3K32 0805
R32 1/8W 3K32 0805
SIGNAL
SD
D41 200V BAV21
R8 1W00 47K 2512
+77V
47P C26 100V 0805
10U C25 16V 1206
2U2 1U C7 25V 1206
AGND
1U C28 50V 1206
GND
10U C118 16 0805
10U C92 16 0805
GND
+16
L8 120uH 8101
C111 4U7 50V 1210
GND
200V D52 BAV21
4U7 C109 50V 1210
4U7 C115 50V 1210
R144 10R0 0.1W 0805
GND
L7 8152 220UH
C106 3N3 0805 25V
R151 1/8W 47K5 0805
10N C107 50V 0805
GND
10N C110 50V 0805
D48 1W5 40V
GND
R148 5K36 0805 W125
R147 1K0 0805 1/8W
+16.5V SWITCHING
REGULATOR SUPPLY
GND
C105 10N 0805 50V
GND
U21 VCC
BST
VIN
SW
RT_SD
RCL
FB
RTN
LM5008A 7963
+20V
R145 274K 0805 1/8W
4U7 C104 50V 1210
R146 68K 0805 W125
GND
C3 470N 1206 100V
-77V
R120 W250 10R 1206
R13 W250 10R 1206
D35 1W0 5V1
GND1
U2 VCC
BST
VIN
SW
RT_SD
RCL
RTN
FB
LM5008A 7963
10N C1 50V 0805
MAKE 100V
8091 L1 1000uH
100V ZD3 100V0 0W4
-77V
R4 357K 0805 1/8W
100N C4 100V 1206
470N C5 100V 1206
R11 274K 0805 1/8W
-77V
-77V
+15LS
TP13
R1 4K99 0805 1/8W
R2 1K0 0805 1/8W
1U C2 25V 1206
1U C99 25V 1206
100N C6 50V 0805
R12 1R0 1206 W250
-77V

Product	PS 12P/15P		
Sheet1	PCB# M1520	Sheet 1 of 4	
Date: Tue May 17, 2016	Rev:V04	YsType:YsType	
Filename: M1520V04sch.sch2006			

Yorkville

BI AMP WOOFER

SIGNAL

SD

NEG AMP

POS AMP

GROUND LINK

GROUND LINK

Product	PS 12P/15P
SheeT2	PCB# M1520 — Sheet 2 of 4
Date: Tue May 17, 2016	Rev:V04 — YsType:YsType
Filename: M1520V04sch.sch2006	

Yorkville

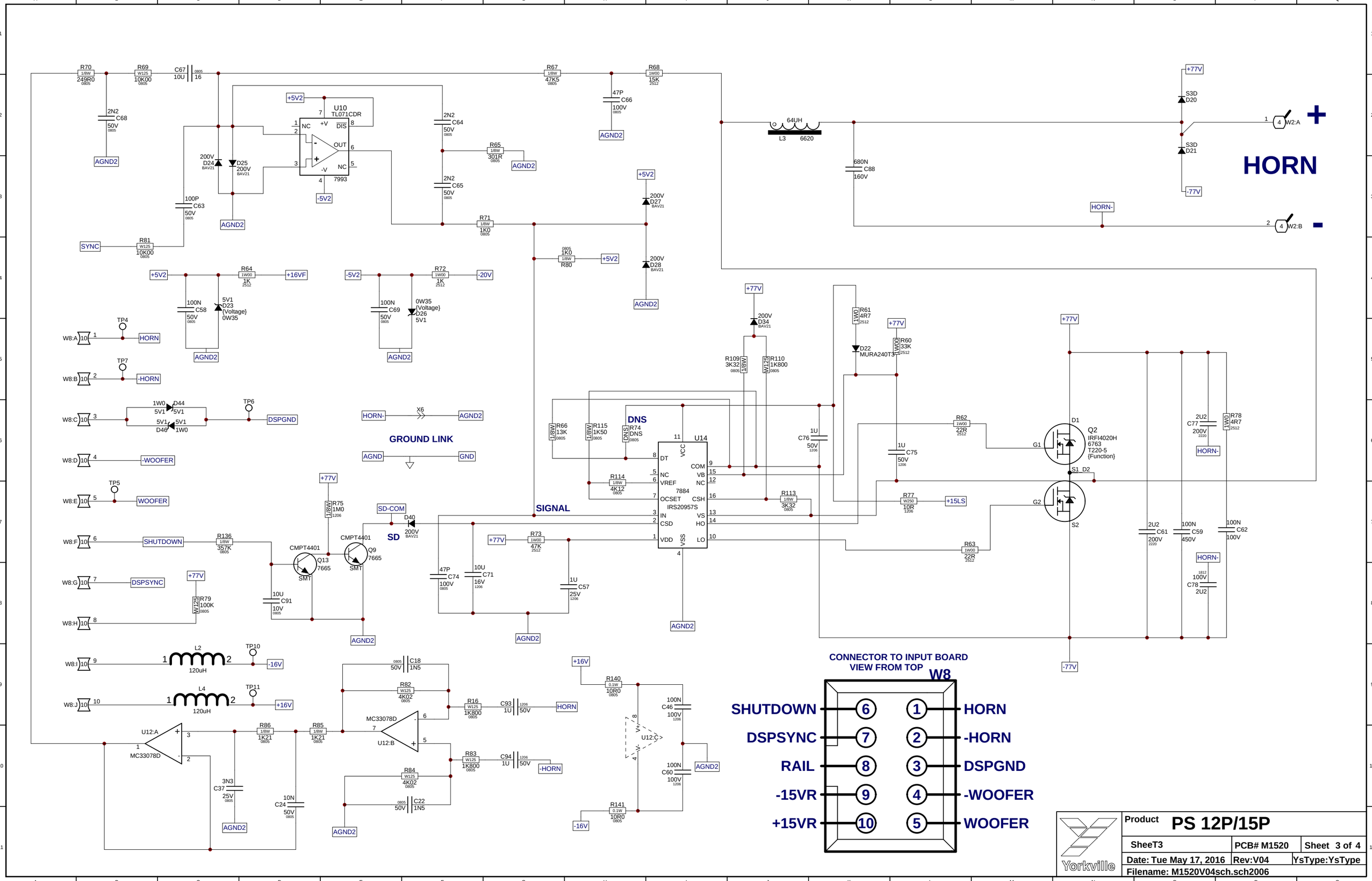
HORN
+
-
W2:A
W2:B
+77V
-77V
S3D D20
S3D D21
64UH
L3 6620
680N C88 160V
HORN-
R70 1/8W 249R0 0805
R69 W125 10K00 0805
C67 10U 16 0805
2N2 C68 50V 0805
AGND2
U10 TL071CDR
7993
+5V2
-5V2
2N2 C64 50V 0805
2N2 C65 50V 0805
R65 1/8W 301R 0805
R67 1/8W 47K5 0805
R68 1W00 15K 2512
47P C66 100V 0805
200V D24 BAV21
D25 200V BAV21
100P C63 50V 0805
SYNC
R81 W125 10K00 0805
R71 1/8W 1K0 0805
200V D27 BAV21
200V D28 BAV21
1K0 R80 0805
R64 1W00 1K 2512
+16VF
100N C58 50V 0805
5V1 D23 {Voltage} 0W35
R72 1W00 1K 2512
-20V
100N C69 50V 0805
0W35 {Voltage} D26 5V1
TP4
W8:A
HORN
TP7
W8:B
-HORN
1W0 D44 5V1 5V1
5V1 5V1 D46 1W0
TP6
W8:C
DSPGND
W8:D
-WOOFER
TP5
W8:E
WOOFER
W8:F
SHUTDOWN
R136 1/8W 357K 0805
W8:G
DSPSYNC
R79 W125 100K 0805
W8:H
W8:I
L2 120uH
TP10
-16V
W8:J
L4 120uH
TP11
+16V
U12:A
MC33078D
R86 1/8W 1K21 0805
R85 1/8W 1K21 0805
3N3 C37 25V 0805
10N C24 50V 0805
C18 1N5 50V
R82 W125 4K02 0805
MC33078D
U12:B
R16 W125 1K800 0805
C93 1U 50V
R83 W125 1K800 0805
C94 1U 50V
R84 W125 4K02 0805
C22 1N5 50V
R140 0.1W 10R0 0805
U12:C
100N C46 100V 1206
100N C60 100V 1206
R141 0.1W 10R0 0805
X6
GROUND LINK
AGND
GND
SD-COM
D40 200V BAV21
SD
SIGNAL
R75 1/8W 1M0 1206
CMPT4401
Q13 7665 SMT
CMPT4401
Q9 7665 SMT
10U C91 10V 0805
47P C74 100V 0805
10U C71 16V 1206
R73 1W00 47K 2512
1U C57 25V 1206
R66 1/8W 13K 0805
R115 1/8W 1K50 0805
DNS
R74 DNS 0805
U14
7884
IRS20957S
DT
NC
VREF
OCSET
IN
CSD
VDD
VCC
COM
VB
NC
CSH
VS
HO
LO
VSS
R114 1/8W 4K12 0805
R109 3K32 1/8W 0805
R110 W125 1K800 0805
200V D34 BAV21
R61 1W0 4R7 2512
D22 MURA240T3
R60 1W00 33K 2512
1U C76 50V 1206
1U C75 50V 1206
R113 1/8W 3K32 0805
R62 1W00 22R 2512
R77 W250 10R 1206
+15LS
R63 1W00 22R 2512
D1
Q2 IRFI4020H 6763 T220-5 {Function}
G1
G2
S1 D2
S2
2U2 C77 200V 2220
R78 1W0 4R7 2512
2U2 C61 200V 2220
100N C59 450V
100N C62 100V
100V C78 2U2 1812
CONNECTOR TO INPUT BOARD
VIEW FROM TOP
W8
SHUTDOWN 6
DSPSYNC 7
RAIL 8
-15VR 9
+15VR 10
1 HORN
2 -HORN
3 DSPGND
4 -WOOFER
5 WOOFER
Yorkville
Product PS 12P/15P
SheeT3
PCB# M1520
Sheet 3 of 4
Date: Tue May 17, 2016
Rev:V04
YsType:YsType
Filename: M1520V04sch.sch2006

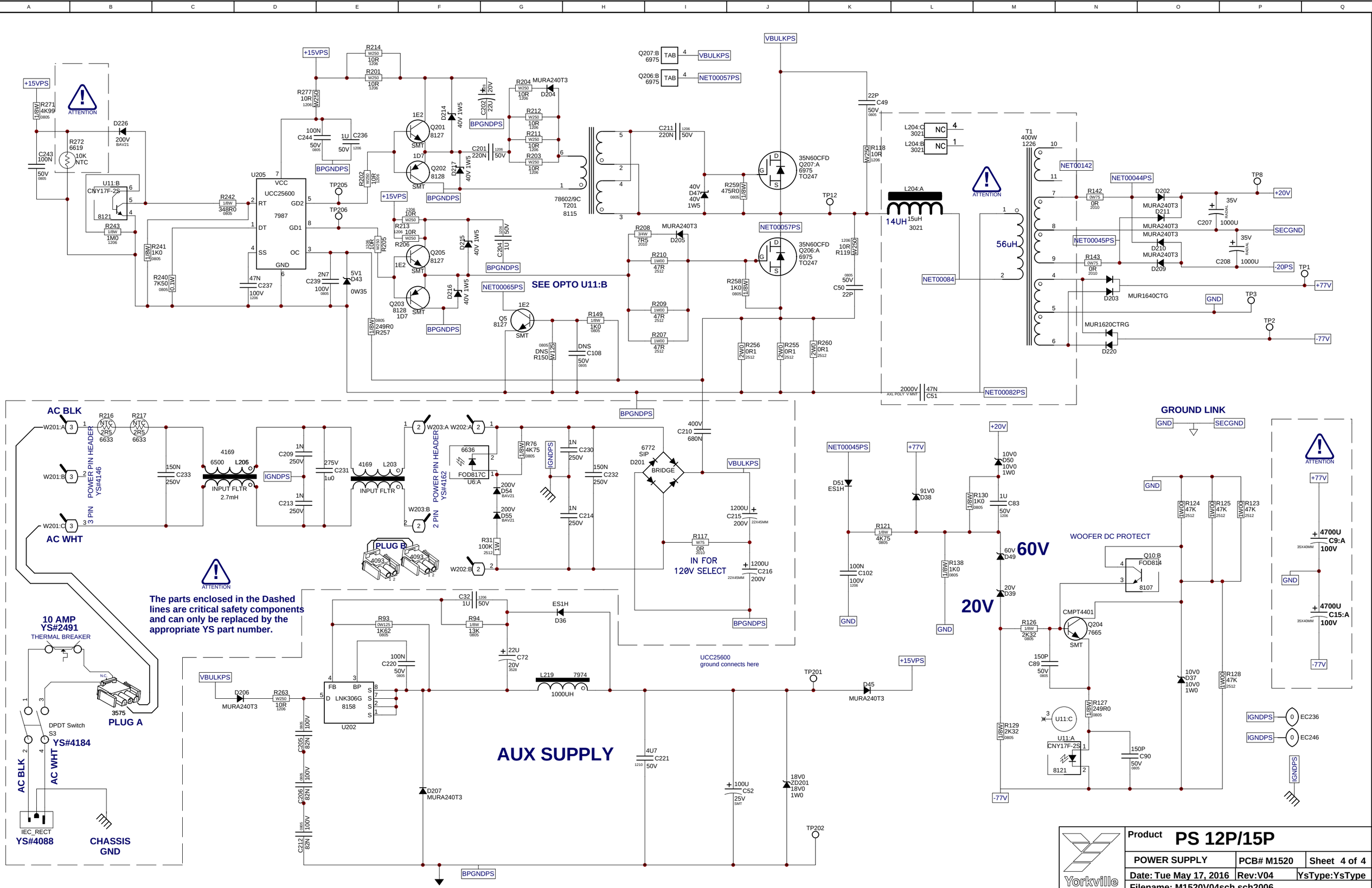

Product	**PS 12P/15P**		
POWER SUPPLY	PCB# M1520	Sheet 4 of 4	
Date: Tue May 17, 2016	Rev:V04	YsType:YsType	
Filename: M1520V04sch.sch2006			

Yorkville

APPLY COIL INSULATOR YS#Z1493 IN THIS AREA BEFORE RTV. SEE NOTE 5.

SEE PICS 1-3 (IN DOCUMENTATION) TO ADD SPACERS TO XSTR AND BRIDGE LEGS

SEE NOTE 1

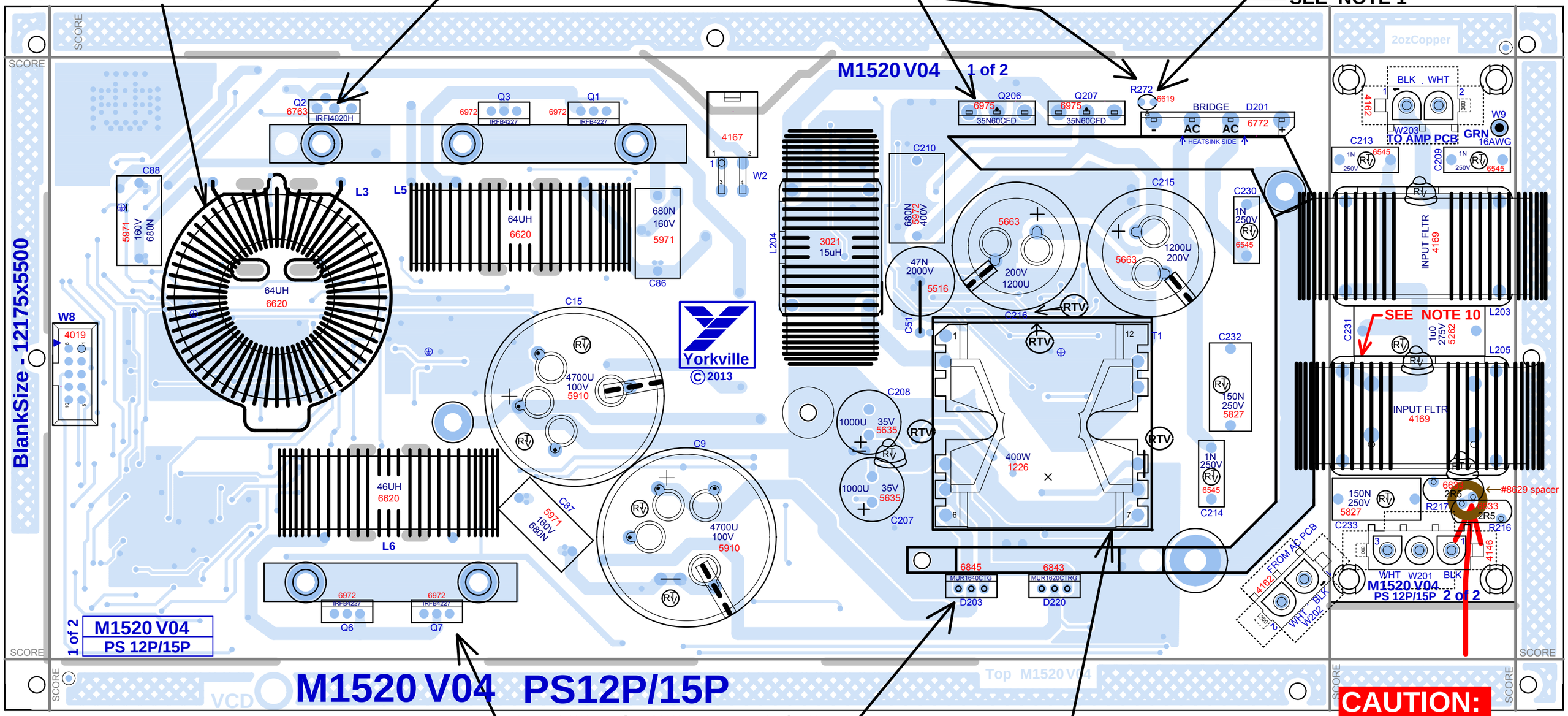

SEE PICS 1-3 (IN DOCUMENTATION) TO ADD SPACERS TO XSTR AND BRIDGE LEGS

APPLY INSULATOR YS#Z1494 TO T1 AND BEND EXCESS FLAP SO IT SITS VERTICALLY BETWEEN C216 AND T1 AS SHOWN. IN PIC. APPLY RTV TO AREAS INDICATED TO SECURE THE INSULATOR FROM VIBRATION. SEE NOTE 9.

CAUTION:

USE ONE #8629 SPACER FOR BOTH SURGISTOR
MAKE SURE RTV COVERS NO MORE THAN 30% OF THE SIDE OF THE SURGISTORS BUT IS STILL WELL SECURED TO COIL L206
SEE PICTURES IN DOCUMENTATION PAGES

SEE LAYOUT DOCUMENTATION

PS 12P/15P
M1520 V04

REMOVE R117
FOR 240V VER.
R117 0R

STUFF FOR MONO
BRIDG
R90 0R
R91 0R

Yorkville
© 2013

Bottom M1520 V04

M1520 V04 BOTTOM VIEW

SEE LAYOUT DOCUMENTATION

SEE LAYOUT DIAGRAM

M1520V04 PS12P/PS15P PRODUCTION NOTES

1. IMPORTANT: PIZZA CUTTER MUST BE USED TO SEPARATE THE PCB FROM THE PANEL.

2. USE SMALL NYLON CABLE TIE YS# 3810 TO SECURE L3, L5, AND L6 TO THE PCB.

3. THERMISTOR R272 (YS# 6619) IS HAND INSERTED.
4. DO NOT STUFF COMPONENTS MARKED WITH DNS. IN THE LAYOUT PADS WITH NO COMPONENT OUTLINE OR REF DESIGNATOR ARE ALSO NOT STUFFED.
5. RTV BETWEEN AND AROUND ALL TALL CAPS, COILS, AND COMPONENTS.
6. ADD THE REQUIRED NUMBER OF SPACERS #8607 AND #3502 TO THE LEGS OF TRANSISTORS AS INDICATED IN PICTURES 1 - 3.
7. PEEL BACK OFF AND APPLY YS# Z1493 INSULATOR FOR COIL L3 IN LOCATION INDICATED. THIS IS DONE AFTER WAVE BEFORE RTV
8. RTV UNDER COILS L3, L5, AND L6 (YS#6620) BEFORE SECURING WITH TIE WRAPS. THEN RTV AROUND THE SIDES. SEE CAUTION NOTE IN LAYOUT AND DOCUMENTATION PICTURES FOR SECURING R216 TO L206 WITH RTV
9. NOTE THAT THIS BOARD USES A WAVE SHIELD THAT REQUIRES THE SOLDER WAVE BE SET TO THE PROPER HEIGHT AND SPEED.
10. AFTER WAVE AND PCB FINISHING, PLEASE PLACE BOARD ON RACK SMT COMPS SIDE UP FOR TRANSPORT TO WIRING DEPARTMENT.
11. BEFORE INSERTING T1 INTO PCB, APPLY INSULATOR YS#1494 TO XFMR BY ALIGNING HOLES IN INSULATOR WITH THE PINS ON T1 XFMR. USE RTV (WHERE INDICATED) TO FASTEN IT DOWN AFTER PLACING T1 WITH INSULATOR INTO PCB.
12. PLACE L205 SO HIGH SIDE OF PLASTIC CARRIER IS AWAY FROM R17. SEE PICTURE

PIC. 1

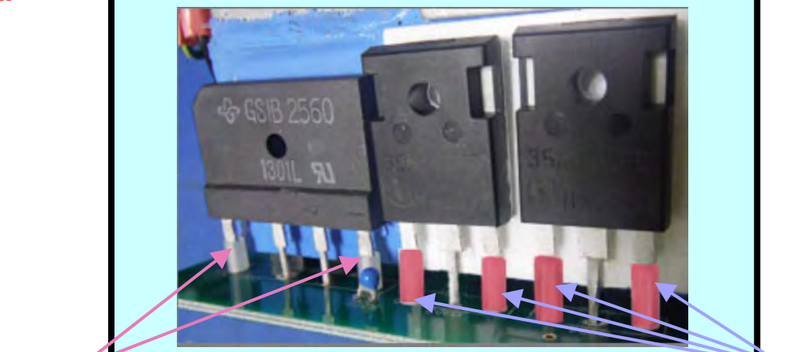

ADD SPACER #9067 TO THE INDICATED LEGS OF D201, Q206 AND Q207

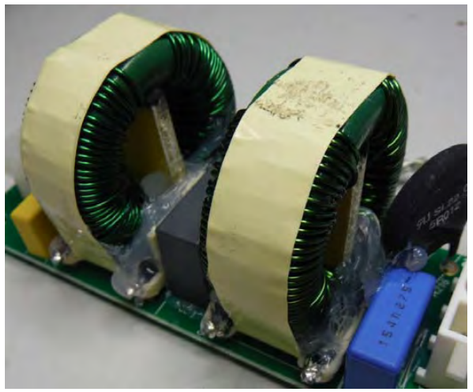

APPLY RTV ALL AROUND THE BASE OF THE COILS L203 AND L205 AS SHOWN



APPLY RTV INSIDE AND ALL AROUND THE COIL

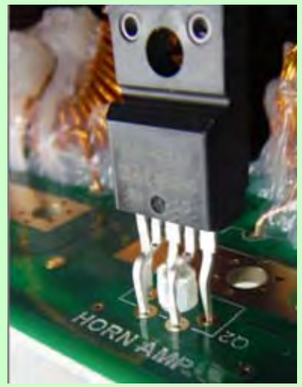

ADD 1 SPACER YS# 8607 TO MIDDLE REAR LEG OF Q2 AS SHOWN

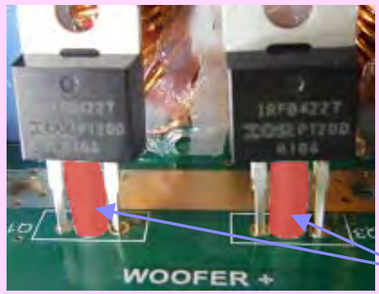

9067 (1)

ADD A # 9067 SPACER TO THE MIDDLE LEG OF Q1, Q3, Q6, Q7 D203 AND D220

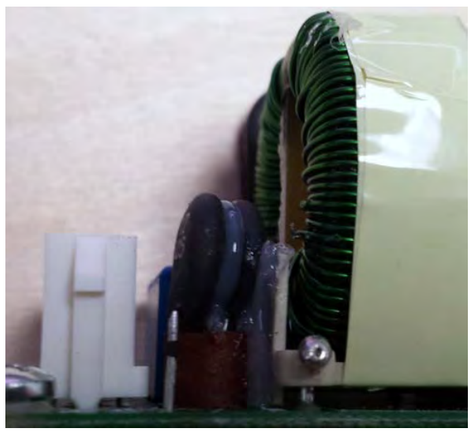

APPLY RTV BETWEEN TWO SURGISTORS AND BETWEEN SURGISTOR AND COIL



YS#1494 INSULATOR. SEE NOTE 9.

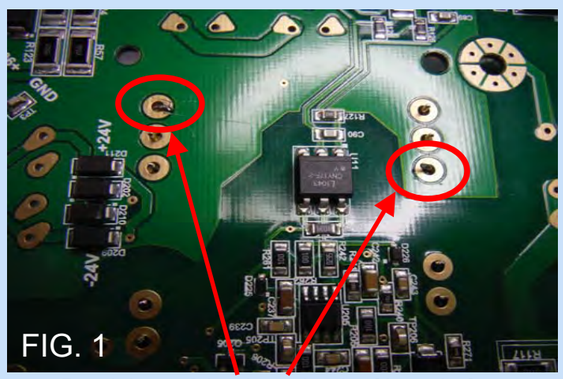

Bend these 2 leads on back of board after inserting T1 (YS# 1226)

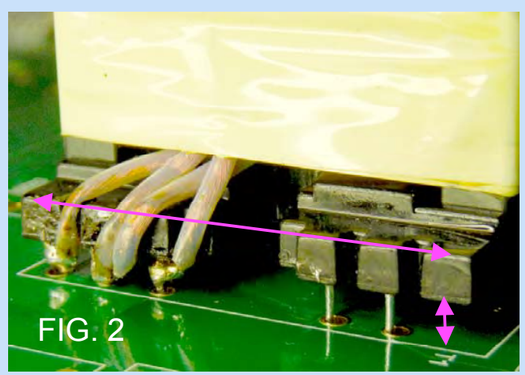

Bending the 2 leads indicated in Fig 1 should level the XFMR T1 as shown in Fig 2 above



BOARDS PLACED UPSIDE DOWN ON RACK
AFTER WAVE SOLDERING

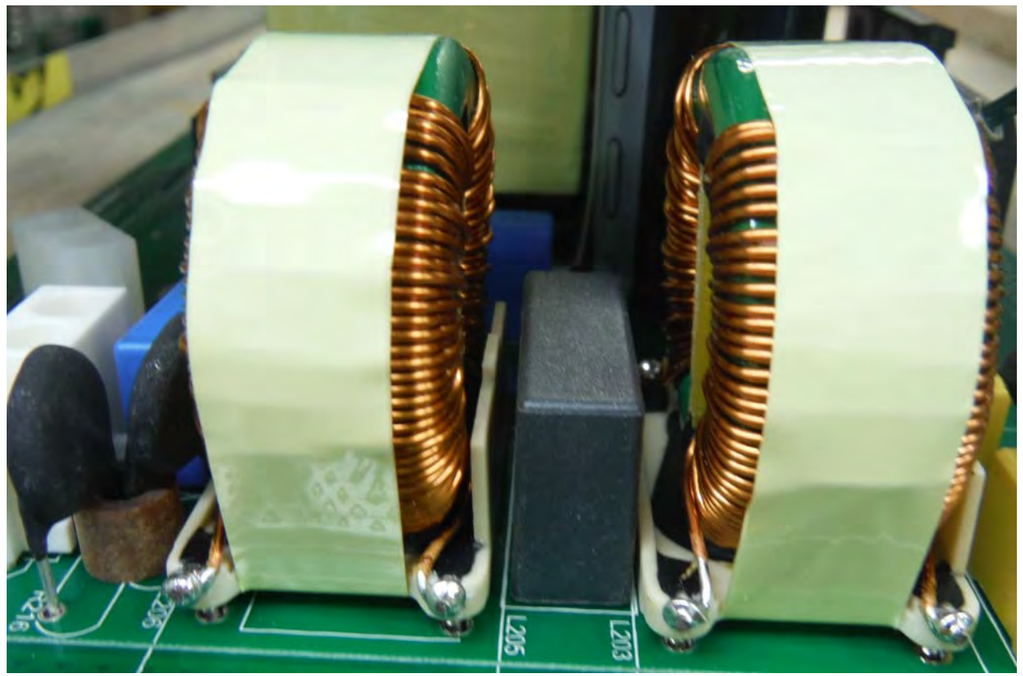

PICTURE FOR NOTE 10.

DESIGN HISTORY AND XSTR PINOUT INFORMATION

XSTR PIN-OUT

35N60CFD

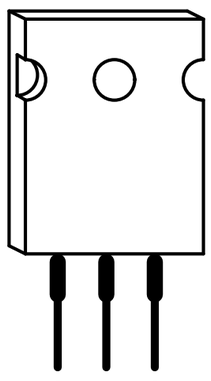

TO-247AC

IRFB4227

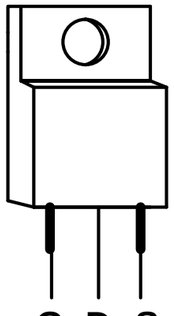

TO-220

M1520 PCB HISTORY

MODEL(S):- PS12P AND PS15P

#	DATE	VER#	DESCRIPTION OF CHANGE
1	10 SEP 2013	V01	RELEASED FOR PRODUCTION
2	22 NOV 2013	V02	ADDED ROUTES FOR BOARD SEPARATION
3	.	.	STRAIN RELIEF OF CERAMIC CAPS
4	06 JAN 2014	V03	PC#8620 - CHANGE L219 FROM YS#8001 TO YS#7974
5	.	.	CHANGE C29 FROM YS#7875 TO YS#8092
6	29-MAY-2014	V04	PC8634: REPLACE #6634 SURGISTOR WITH 2 #6633 SURGISTORS
7	.	.	REVISED PER QPS REPORT
8	24-JUN-2014	.	PC8641: REPLACE 10N CAPS C70 & C79 WITH
9	.	.	VALUE 15N YS# 7798
10	19 AUG 2014	.	PC8687: REPLACE R145 357K (YS#7639) WITH 274K (YS#7686)
11	13-NOV-2014	.	ADDED NOTE 10 FOR PLACEMENT OF L205
12	D	V	N
13	D	V	N

AUDIO-IN
R23 1/8W 1K0 0805
R22 0.1W 7K50 0805
C17 10U 0805 16
10N C20 50V 0805
AGND
R20 1/8W 91K 0805
R21 1W00 15K 2512
47P C16 100V 0805
AGND
L5 6620 64UH
TP14
680N C86 160V
GND
Q10:A FOD814 1 2 8107
R27 W250 100R 1206
R5 1/8W 1K0 0805
+77V
S3D D2
S3D D3
-77V
10V0 D29
1W0
1W0
D30 10V0
R9 2W00 10K 2512
WOOFER-1
C8 0805 10U 16
C85 0805 10U 16
3 4 W2:C
WOOFER +
4 4 W2:D
WOOFER-1
WOOFER+1
R90 W75 0R 2010
R91 W75 0R 2010
R6 W75 0R 2010
R89 W75 0R 2010
GND
REMOVE R90 AND R91
FOR PS10P (MONO MODE)
REMOVE R6 AND R89
FOR BRIDGE MODE
+5V
U17 TL071CDR
1 NC
2
3
4 -V
5 NC
6 OUT
7 +V
8 DIS
7993
D5 200V
D6 200V
100P C12 50V 0805
AGND
2N2 C13 50V 0805
2N2 C14 50V 0805
R18 1/8W 348R0 805
AGND
-5V
R24 1/8W 1K0 0805
+5V
0805 1K0 1/8W R33
200V D7
200V D8
AGND
WSYNC
R37 W125 10K00 0805
+5V
R17 1W00 1K 2512
+16VF
D9 5V1 0W35
100N C21 25V 0805
AGND
FROM SWITCHING
REGULATOR SUPPLY
-5V
R25 1W00 1K 2512
-20V
100N C23 25V 0805
D10 5V1 0W35
AGND
+16VF
R87 W125 100K 0805
+77V
R54 1M0 1/8W 1206
AC SHUT DOWN
FROM POWER SUPPLY
+77V
200V D32
R34 3K32 1/8W 0805
R35 3K32 1/8W 0805
1W0 R10 4R7 2512
D4 MURA240T3
+77V
1W0 R7 33K 2512
HORN-
C31 1U 50V
C84 1U 50V
R139 681 1/8W 0805
22U C103 20V 3528
CMPT4401 Q8 7665 SMT
R122 W125 10K00 0805
D56 200V
D53 200V
U6:B FOD817C 6636
SD-COM
R152 100K 0805
100N C73 25V 0805
10U C118 16 0805
10U C92 16 0805
GND
R19 13K 1/8W 0805
R106 3K32 1/8W 0805
DNS
R26 DNS 0805
U5
11 VCC
8 DT
5 NC
6 VREF
7 OCSET
3 IN
2 CSD
1 VDD
9 COM
15 VB
12 NC
16 CSH
13 VS
14 HO
10 LO
4 VSS
7884 IRS20957S
R36 1/8W 3K32 0805
1U C28 50V 1206
R32 1/8W 3K32 0805
SIGNAL
SD
D41 200V
R8 1W00 47K 2512
+77V
47P C26 100V 0805
10U C25 16V 1206
2U2 1U C7 25V 1206
AGND
1U C27 50V 1206
U3
1 VCC
2 IN1
5 IN2
4 SINK
6 SOURCE
3 GND
ZXGD3002E6 7949
R14 1W0 4R7 2512
R29 W250 10R 1206
+15LS
U1
1 VCC
2 IN1
5 IN2
4 SINK
6 SOURCE
3 GND
ZXGD3002E6 7949
R15 1W0 4R7 2512
OUTPUT+
+77V
IRFB4227 Q1 6972 TO220
D G S
IRFB4227 Q3 6972 TO220
D G S
2U2 C10 200V 2220
100N C19 450V
100N C29 450V
2U2 C11 100V 1812
R30 1W0 4R7 2512
GND
-77V
TO263-5
IN GND ADJ
(Function) LM2991SX
ON/OFF OUT
Q14 8136
R131 1/8W 8K25 0805
L10 120uH 8101
-20V
TP9
L9 120uH 8101
-20PS
C112 4U7 50V 1210
SECGND
GND1
-16V
4U7 C113 50V 1210
HORN-
L11 120uH 8101
+16V
4U7 C114 50V 1210
GND
+16VF
L8 120uH 8101
C111 4U7 50V 1210
GND
+16
L7 8152 220UH
C106 3N3 0805 25V
R151 1/8W 47K5 0805
10N C110 50V 0805
10N C107 50V 0805
D48 1W5 40V
GND
U21
7 VCC
2 BST
1 SW
5 FB
4 RTN
8 VIN
6 RT_SD
7963
3 RCL
LM5008A
C105 0805 10N 50V
GND
+20V
R145 1/8W 274K 0805
4U7 C104 50V 1210
R146 W125 68K 0805
200V D52
4U7 C109 50V 1210
R144 10R0 0.1W 0805
R148 5K36 W125 0805
4U7 C115 50V 1210
R147 1K0 1/8W 0805
+16.5V SWITCHING
REGULATOR SUPPLY
GND
GND1
D35 1W0 5V1
R120 W250 10R 1206
R13 W250 10R 1206
C3 470N 1206 100V
-77V
U2
7 VCC
2 BST
8 VIN
1 SW
6 RT_SD
3 RCL
4 RTN
5 FB
LM5008A 7963
10N C1 50V 0805
MAKE
100V
8091 L1 1000uH
100V ZD3 100V0 0W4
R4 357K 1/8W 0805
100N C4 100V 1206
470N C5 100V 1206
R11 274K 1/8W 0805
-77V
TP13
+15LS
R1 4K99 1/8W 0805
R2 1K0 1/8W 0805
1U C2 25V 1206
1U C99 25V 1206
100N C6 25V 0805
R12 1R0 W250 1206
-77V

Product	PS12PCE/15PCE		
Woofer Amp A	PCB# M1521	Sheet 1 of 4	
Date: Fri Nov 14, 2014	Rev:V01	YsType:YS	
Filename: M1521V01sch.sch2006			

Yorkville

BI AMP WOOFER

SIGNAL

SD

NEG AMP

POS AMP

GROUND LINK

GND — GND1

GROUND LINK

GND — AGND1

Product **PS12PCE/15PCE**		
Woofer Amp B	PCB# M1521	Sheet 2 of 4
Date: Fri Nov 14, 2014	Rev:V01	YsType:YS
Filename: M1521V01sch.sch2006		

Yorkville

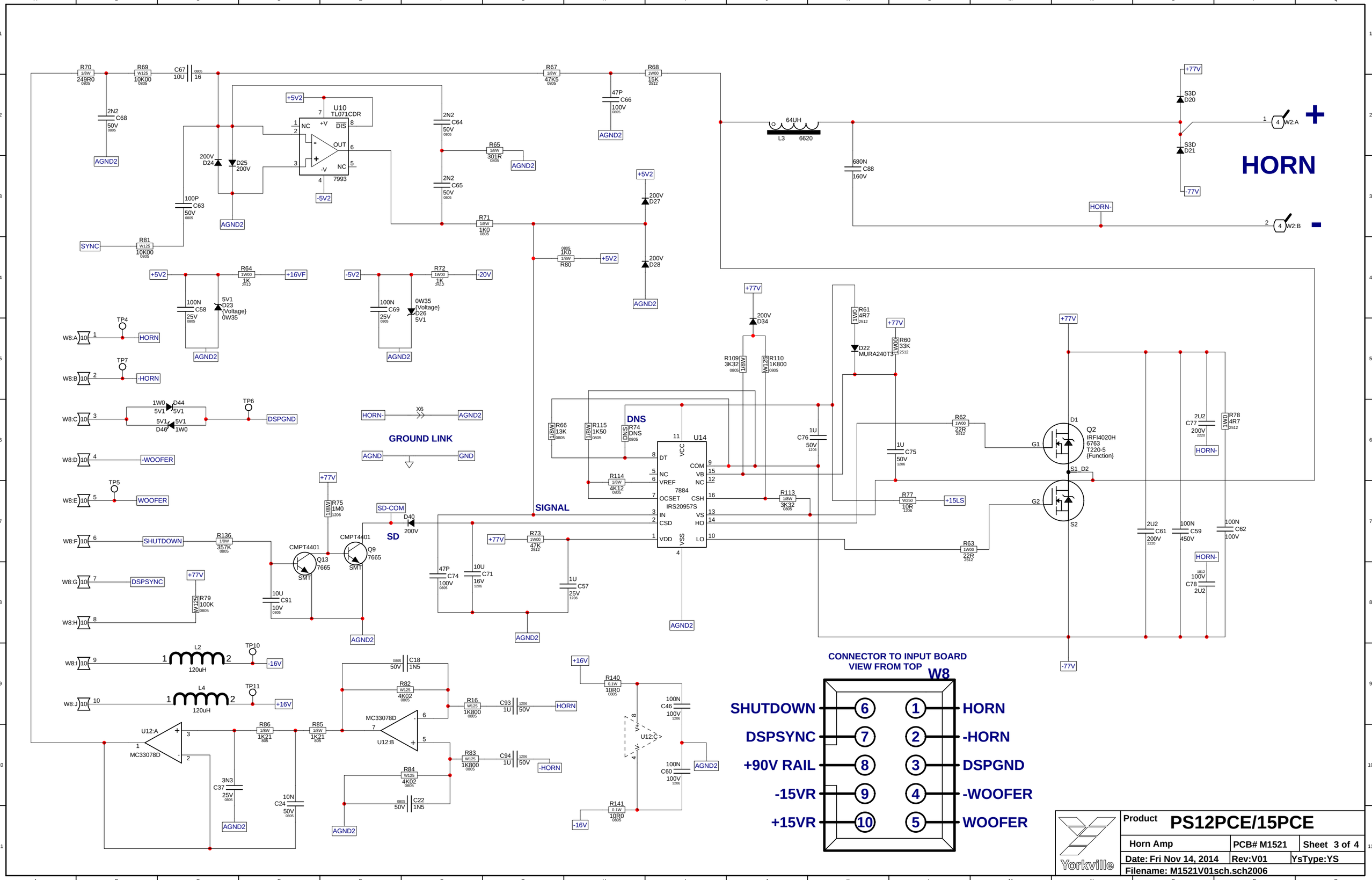
HORN
+
-
W2:A
W2:B
HORN-
+77V
-77V
S3D D20
S3D D21
64UH
L3 6620
680N C88 160V
R70 1/8W 249R0 0805
R69 W125 10K00 0805
C67 10U 16 0805
2N2 C68 50V 0805
AGND2
U10 TL071CDR
7993
+5V2
-5V2
2N2 C64 50V 0805
2N2 C65 50V 0805
R65 1/8W 301R 0805
R67 1/8W 47K5 0805
R68 1W00 15K 2512
47P C66 100V 0805
200V D24
D25 200V
100P C63 50V 0805
SYNC
R81 W125 10K00 0805
R71 1/8W 1K0 0805
200V D27
200V D28
R80 1K0
R64 1W00 1K 2512
+16VF
100N C58 25V 0805
5V1 D23 {Voltage} 0W35
R72 1W00 1K 2512
-20V
100N C69 25V 0805
0W35 {Voltage} D26 5V1
TP4
W8:A
HORN
TP7
W8:B
-HORN
1W0 D44 5V1 5V1
5V1 5V1 D46 1W0
TP6
W8:C
DSPGND
W8:D
-WOOFER
TP5
W8:E
WOOFER
W8:F
SHUTDOWN
R136 1/8W 357K 0805
W8:G
DSPSYNC
W8:H
R79 W125 100K 0805
W8:I
L2 120uH
TP10
-16V
W8:J
L4 120uH
TP11
+16V
GROUND LINK
X6
AGND
GND
SD-COM
D40 200V
SD
SIGNAL
CMPT4401 Q13 7665 SMT
CMPT4401 Q9 7665 SMT
R75 1/8W 1M0 1206
10U C91 10V 0805
R73 1W00 47K 2512
47P C74 100V 0805
10U C71 16V 1206
1U C57 25V 1206
DNS
R74 DNS 0805
R66 1/8W 13K 0805
R115 1/8W 1K50 0805
R114 1/8W 4K12 0805
U14
7884
IRS20957S
DT
NC
VREF
OCSET
IN
CSD
VDD
VCC
COM
VB
NC
CSH
VS
HO
LO
VSS
R109 3K32 1/8W 0805
R110 W125 1K800 0805
200V D34
R61 1W0 4R7 2512
D22 MURA240T3
R60 1W00 33K 2512
1U C76 50V 1206
1U C75 50V 1206
R113 1/8W 3K32 0805
R62 1W00 22R 2512
R77 W250 10R 1206
+15LS
R63 1W00 22R 2512
D1
Q2 IRFI4020H 6763 T220-5 {Function}
G1
G2
S1 D2
S2
2U2 C77 200V 2220
R78 1W0 4R7 2512
2U2 C61 200V 2220
100N C59 450V
100N C62 100V
100V C78 2U2 1812
R140 0.1W 10R0 0805
R141 0.1W 10R0 0805
100N C46 100V 1206
100N C60 100V 1206
U12:C
U12:A
MC33078D
R86 1/8W 1K21 805
R85 1/8W 1K21 805
3N3 C37 25V 0805
10N C24 50V 0805
C18 1N5 50V 0805
R82 W125 4K02 0805
R16 W125 1K800 0805
C93 1U 50V 1206
R83 W125 1K800 0805
C94 1U 50V 1206
R84 W125 4K02 0805
C22 1N5 50V 0805
CONNECTOR TO INPUT BOARD
VIEW FROM TOP
W8
SHUTDOWN 6
DSPSYNC 7
+90V RAIL 8
-15VR 9
+15VR 10
1 HORN
2 -HORN
3 DSPGND
4 -WOOFER
5 WOOFER
Yorkville
Product PS12PCE/15PCE
Horn Amp
PCB# M1521
Sheet 3 of 4
Date: Fri Nov 14, 2014
Rev:V01
YsType:YS
Filename: M1521V01sch.sch2006

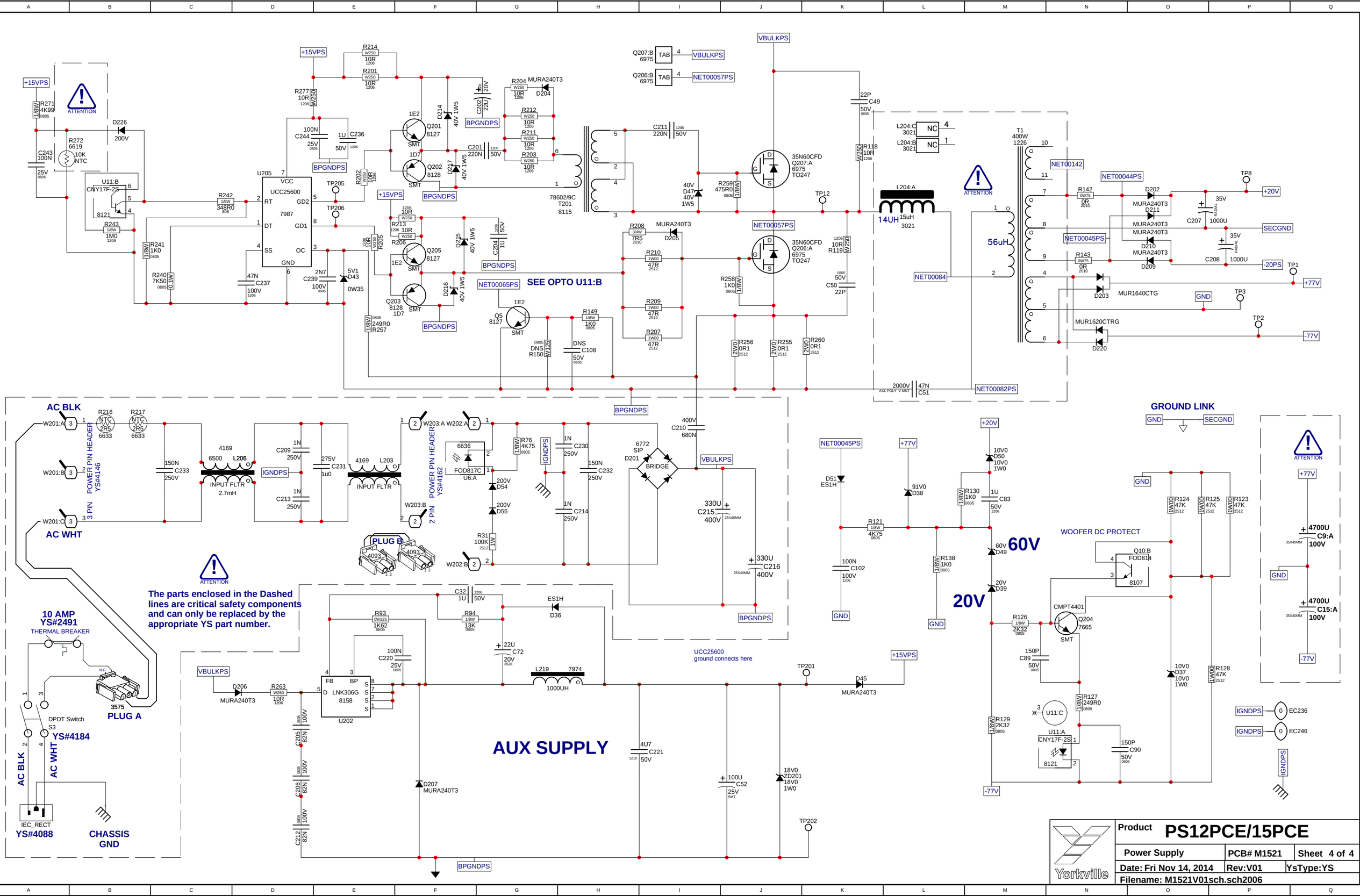

Product	PS12PCE/15PCE	
Power Supply	PCB# M1521	Sheet 4 of 4
Date: Fri Nov 14, 2014	Rev:V01	YsType:YS
Filename: M1521V01sch.sch2006		

Yorkville

APPLY COIL INSULATOR YS#Z1493 IN THIS AREA BEFORE RTV. SEE NOTE 5.

SEE PICS 1-3 (IN DOCUMENTATION) TO ADD SPACERS TO XSTR AND BRIDGE LEGS

SEE NOTE 1

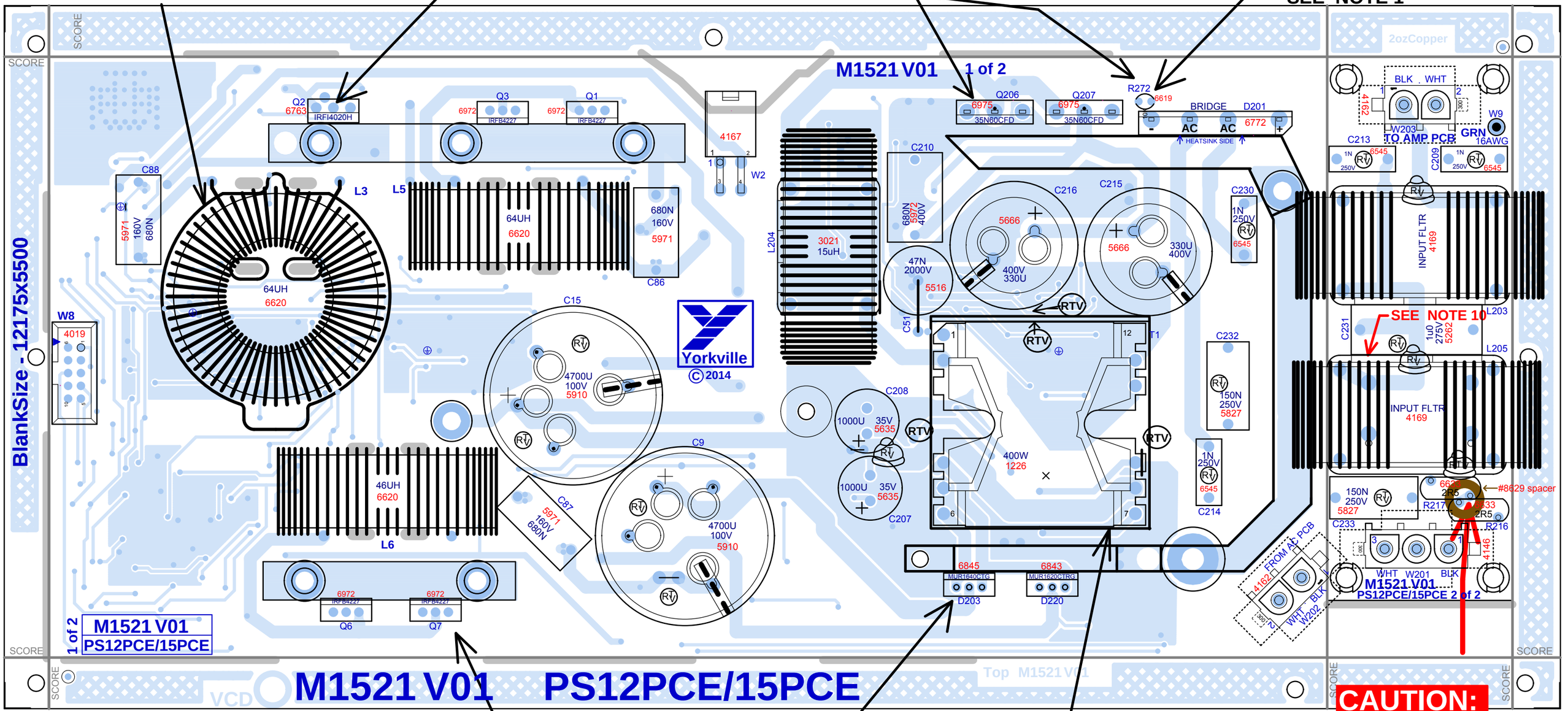

M1521 V01 PS12PCE/15PCE

SEE PICS 1-3 (IN DOCUMENTATION) TO ADD SPACERS TO XSTR AND BRIDGE LEGS

APPLY INSULATOR YS#Z1494 TO T1 AND BEND EXCESS FLAP SO IT SITS VERTICALLY BETWEEN C216 AND T1 AS SHOWN. IN PIC. APPLY RTV TO AREAS INDICATED TO SECURE THE INSULATOR FROM VIBRATION. SEE NOTE 9.

CAUTION:

USE ONE #8629 SPACER FOR BOTH SURGISTOR
MAKE SURE RTV COVERS NO MORE THAN 30% OF THE SIDE OF THE SURGISTORS BUT IS STILL WELL SECURED TO COIL L206
SEE PICTURES IN DOCUMENTATION PAGES

SEE LAYOUT DOCUMENTATION

PS12PCE/15PCE
M1521 V01

STUFF FOR MONO BRIDG R90 R91 0R 0R

screw

Yorkville
© 2014

+16.5V SWITCHING REGULATOR SUPPLY

+15VPS

+15LS

ALL GND

Bottom M1521 V01

M1521 V01

M1521 **V01** BOTTOM VIEW

SEE LAYOUT DOCUMENTATION

SEE LAYOUT DIAGRAM

M1521 V01 PS12PCE/15PCE PRODUCTION NOTES

1. THERMISTOR R272 (YS# 6619) IS HAND INSERTED.
2. DO NOT STUFF COMPONENTS MARKED WITH DNS. IN THE LAYOUT PADS WITH NO COMPONENT OUTLINE OR REF DESIGNATOR ARE ALSO NOT STUFFED.
3. RTV BETWEEN AND AROUND ALL TALL CAPS, COILS, AND COMPONENTS.
4. ADD THE REQUIRED NUMBER OF SPACERS #8607 AND #3502 TO THE LEGS OF TRANSISTORS AS INDICATED IN PICTURES 1 - 3.
5. PEEL BACK OFF AND APPLY YS# Z1493 INSULATOR FOR COIL L3 IN LOCATION INDICATED. THIS IS DONE AFTER WAVE BEFORE RTV
6. RTV UNDER COILS L3, L5, AND L6 (YS#6620) BEFORE SECURING WITH TIE WRAPS. THEN RTV AROUND THE SIDES. SEE CAUTION NOTE IN LAYOUT AND DOCUMENTATION PICTURES FOR SECURING R216 TO L206 WITH RTV
7. NOTE THAT THIS BOARD USES A WAVE SHIELD THAT REQUIRES THE SOLDER WAVE BE SET TO THE PROPER HEIGHT AND SPEED.
8. AFTER WAVE AND PCB FINISHING, PLEASE PLACE BOARD ON RACK SMT COMPS SIDE UP FOR TRANSPORT TO WIRING DEPARTMENT.
9. BEFORE INSERTING T1 INTO PCB, APPLY INSULATOR YS#1494 TO XFMR BY ALIGNING HOLES IN INSULATOR WITH THE PINS ON T1 XFMR. USE RTV (WHERE INDICATED) TO FASTEN IT DOWN AFTER PLACING T1 WITH INSULATOR INTO PCB.
10. PLACE L205 SO HIGH SIDE OF PLASTIC CARRIER IS AWAY FROM R217. SEE PICTURE

PIC. 1

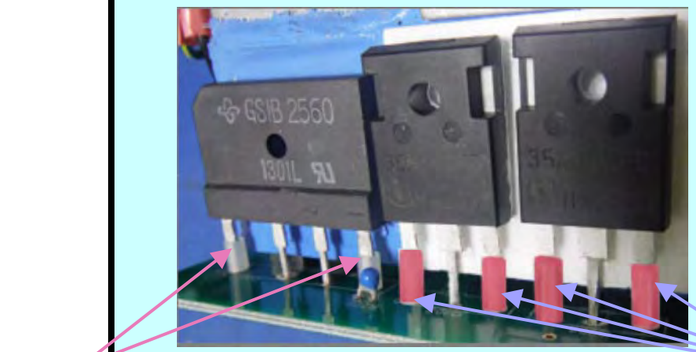

ADD SPACER #9067 TO THE INDICATED LEGS OF D201, Q206 AND Q207

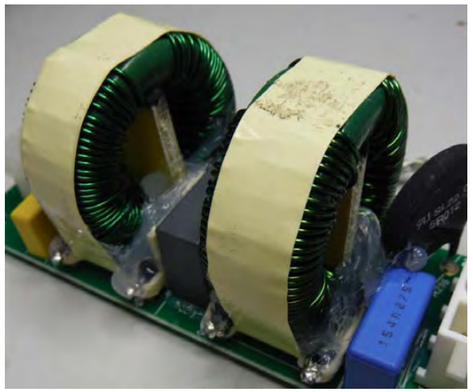

APPLY RTV ALL AROUND THE BASE OF THE COILS L203 AND L205 AS SHOWN



APPLY RTV INSIDE AND ALL AROUND THE COIL

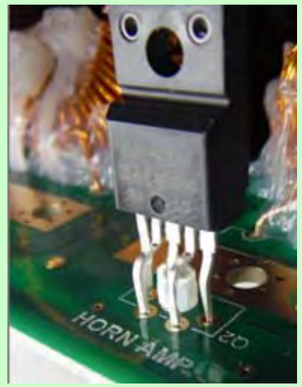

ADD 1 SPACER YS# 8607 TO MIDDLE REAR LEG OF Q2 AS SHOWN



ADD A # 9067 SPACER TO THE MIDDLE LEG OF Q1, Q3, Q6, Q7 D203 AND D220

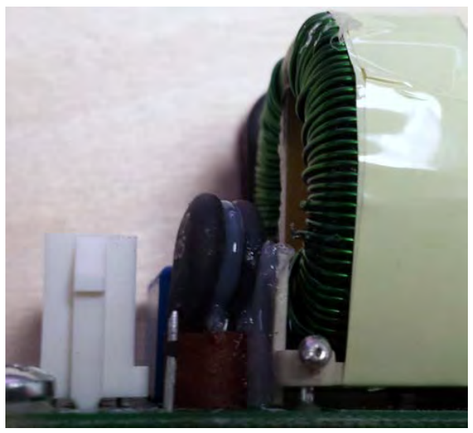

APPLY RTV BETWEEN TWO SURGISTORS AND BETWEEN SURGISTOR AND COIL



YS#1494 INSULATOR. SEE NOTE 9.

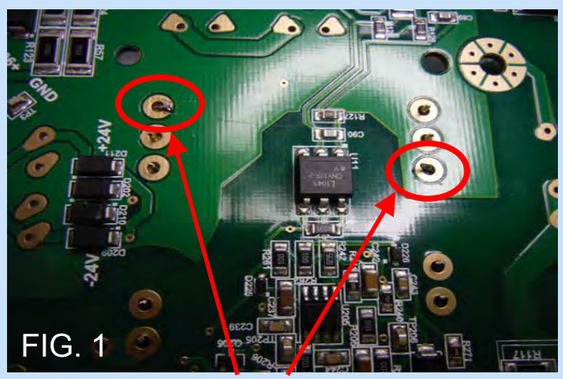

Bend these 2 leads on back of board after inserting T1 (YS# 1226)

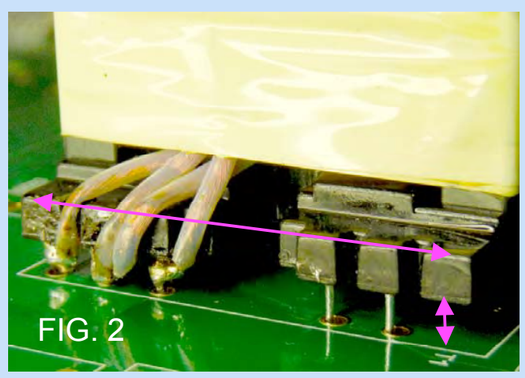

Bending the 2 leads indicated in Fig 1 should level the XFMR T1 as shown in Fig 2 above



BOARDS PLACED UPSIDE DOWN ON RACK
AFTER WAVE SOLDERING

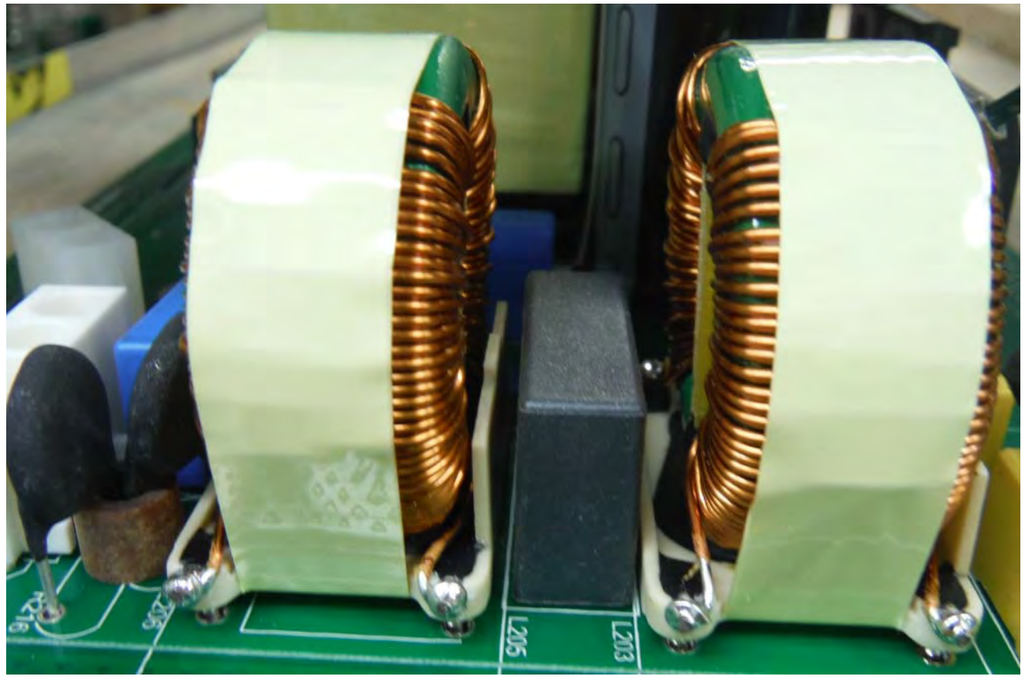

PICTURE FOR NOTE 10.

DESIGN HISTORY AND XSTR PINOUT INFORMATION

XSTR PIN-OUT

35N60CFD

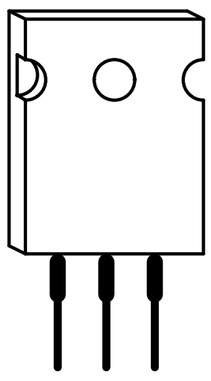

TO-247AC

IRFB4227

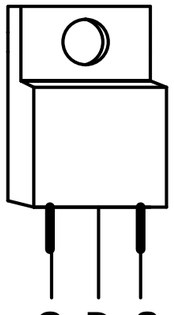

TO-220

M1521.PCB_DATABASE_HISTORY			
MODEL(S):-	M1521		
#	DATE	VER#	DESCRIPTION OF CHANGE
1	14-NOV-2014	V01	First Release
2	D	V	N
3	D	V	N
4	D	V	N
5	D	V	N
6	D	V	N
7	D	V	N
8	D	V	N
9	D	V	N
10	D	V	N
11	D	V	N
12	D	V	N
13	D	V	N

AUX SUPPLY

VBULKPS
D206 MURA240T3 403D
W250 R263 10R 1206
U202 LNK306G 8158 SMD8B
C220 100N 50V 0805
R94 W100 12K1 0603
R93 W250 1K62 0805
C72 10U 16V 1206
D36 ES1H DO-214AC
L219 7974 1000UH
+14V
+15VPS
R158 W250 0R0 0805
C125 400V 22N RAD POLY
D207 MURA240T3 403D
AUXGND
C221 50V 4U7 1210
R157 W125 3K32 0805
100U 25V
C49 ELE 8mm
ZD201 18V DO-214AC
R277 W250 10R 1206
C244 16V 10U 1206
C204 1U 50V 1206
C236 1U 50V 1206
U205 UCC25600 7987 SO8
VCC RT DT SS GD2 GD1 OC GND
U20 MIC4424 6652 SO8
NC VS NC INA OUTA INB OUTB GND
C108 50V 4U7 1210
R271 W100 4K99 0805
D62 D1005 CDSF4148
OPTO-COUPLER U11B CNY17F-2S 8121
R272 W619 10K
C243 100N 50V 0805
R242 W100 475R0 0805
R241 1K37 W0603
R288 W100 27K4 0805
R159 W125 1K21 0805
MMBT5401 Q5 7837 SOT-23
SS
C90 10U 16V 1206
C237 50V 220N 1206
R240 W125 17K8 0805
C239 10N 50V 0805
D43 5V1 SOT-23
R189 W125 348R0 0805
R282 W125 348R0 0805
R190 W125 1K62 0805
R191 W125 1K62 0805
C84 10P 1000V 1206
T2 XF3955
T3 XF3955
D47 SOD323F 30V
D57 SOD323F 30V
D58 SOD323F 30V
D59 SOD323F 30V
C123 50V 4U7 1210
C124 50V 4U7 1210
D60 SOT-23 15V0
D61 SOT-23 15V0
C114 1N 50V 0805
R52 W125 47R5 0805
R155 W100 1K0 0805
C116 1N 50V 0805
R74 W125 47R5 0805
R156 W100 1K0 0805
C111 50V 100P 0805
C113 50V 100P 0805
R153 W100 499R 0805
R154 W100 499R 0805
U19 MIC4424 6652 SO8
U22 MIC4424 6652 SO8
R194 W250 100K 1206
R195 W250 100K 1206
R192 W250 100K 1206
R193 W250 100K 1206
R5310R W500 1210
R57 10R W500 1210
R149 W500 10R 1210
R150 10R W500 1210
R207 W125 10K00 0805
R211 W125 10K00 0805
Q207 SPW35N60CFD 6975 TO247
Q206 SPW35N60CFD 6975 TO247
HB_OUT
BPGNDPS
X9
C51 Axial 2000V 47N
L204 43uH 3109
T1 1249
BPGNDPS
GND
ATTENTION
Hand
+86.3V
+77V
D203 MUR1640CTG 400V
D220 MUR1620CTRG 200V
C120 22X35MM 1500U 100V
C121 22X35MM 1500U 100V
C96 2U2 1812
C97 2U2 1812
-77V
-86.3V

The parts enclosed in the Dashed lines are critical safety components and can only be replaced by the appropriate YS part number.

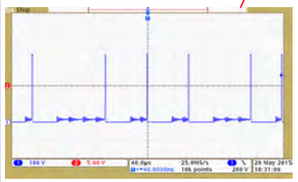

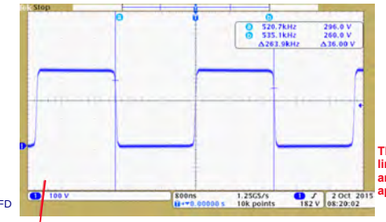

AC BLK
W201A
W201B
AC WHT
W201C
C233 275V 1u0 RAD 'X2'
R284 1W W0 47K 2512
R285 1W W0 47K 2512
L9 3.3mH 6507
C209 250V 1N MF 10MM
C213 250V 1N MF 10MM
IGNDPS
C231 1u0 275V RAD 'X2'
L10 3.3mH 6507
U6A 4PIN OPTO-COUPLER 8107 FOD814
R31 W100 10K0 0805
R177 W250 100K 1206
R176 W250 100K 1206
C230 250V 1N MF 10MM
C232 250V 150N X2 15MM
C214 250V 1N MF 10MM
R216 NTC 6622 10R
K1A RELAY 1C 3105
D201 6772 BRIDGE SIP 400V
TP9
VBULKPS
+340V
C216 25X40MM 1200U 200V
C215 25X40MM 1200U 200V
R292 W250 100K 1206
R293 W250 100K 1206
R265 W250 100K 1206
R266 W250 100K 1206
C32 400V 22N RAD POLY
C210 400V 680N RAD POLY
R118 W00 2R0 2512
TP11
BPGNDPS
ATTENTION

10 AMP
YS#2491
Thermal Breaker
S1
3575
PLUG A
DPDT Switch
S3
YS#4184
AC BLK
AC WHT
CHASSIS GND
IEC_RECT
YS#4088

SS
R152 W100 100R 0805
TP12
+15VPS
U6B 4PIN OPTO-COUPLER 8107 FOD814
R205 W100 1K0 0805
R202 W100 100K0 0805
R210 W125 68K 0805
U25B 7661 LM393D SO8
R201 W125 40K2 0805
D46 5V1 SOT-23
CDSF4148
D50
K1B
R204 W100 10K0 0805
R208 W125 47R5 0805
RELAY 1C 3105
MMBT4401 Q35 7665 SOT-23
C93 50V 1U 1206
C92 22U 16V Elec
R209 W100 20K5 0805
R203 W100 182K 0805
7661 LM393D U25A SO8
R212 W125 40K2 0805
R206 W100 20K5 0805
Q8 MMBT4401 7665 SOT-23
U25C LM393D 7661 SO8
V+ V-
C144 50V 1U 1206
X12
TP13
AUXGND
X2
AUXGND
BPGNDPS
X7
AUXGND
BPGNDPS

WOOFER DC PROTECT
Q10B
FOD814
4PIN OPTO-COUPLER
8107
R121 W125 47K5 0805
R123 W125 47K5 0805
R126 W100 2K32 0805
R130 W125 47K5 0805
R129 W100 2K32 0805
R127 W100 1K0 0805
CNY17F-2S OPTO-COUPLER
U11A 8121
R128 W100 1K0 0805
C89 50V 150P 0805
C83 100N 1206 100V
R138 W100 1K0 0805
Q4 TL431A 7720 SOT23
2V5
R26 W125 68R1 0805
D37 10V0 DO-214AC
R124 W250 10K 0805
R125 W250 10K 0805
R217 W250 10K 0805
R283 W250 10K 0805
TP10
GND
R248 W125 681R 0805
D54 SOD-323 200V
C141 2U2 1812
R249 W100 1M0 0805
R250 W100 150K0 0805
NOAC
GND

Product	**SW PS**		
POWER SUPPLY.SCHDOC	PCB# M1522	Sheet 1 of 6	
Date: 2017-05-08	Rev:V01P0	YsType:YsType	
Filename: POWER SUPPLY.SCHDOC			

Yorkville

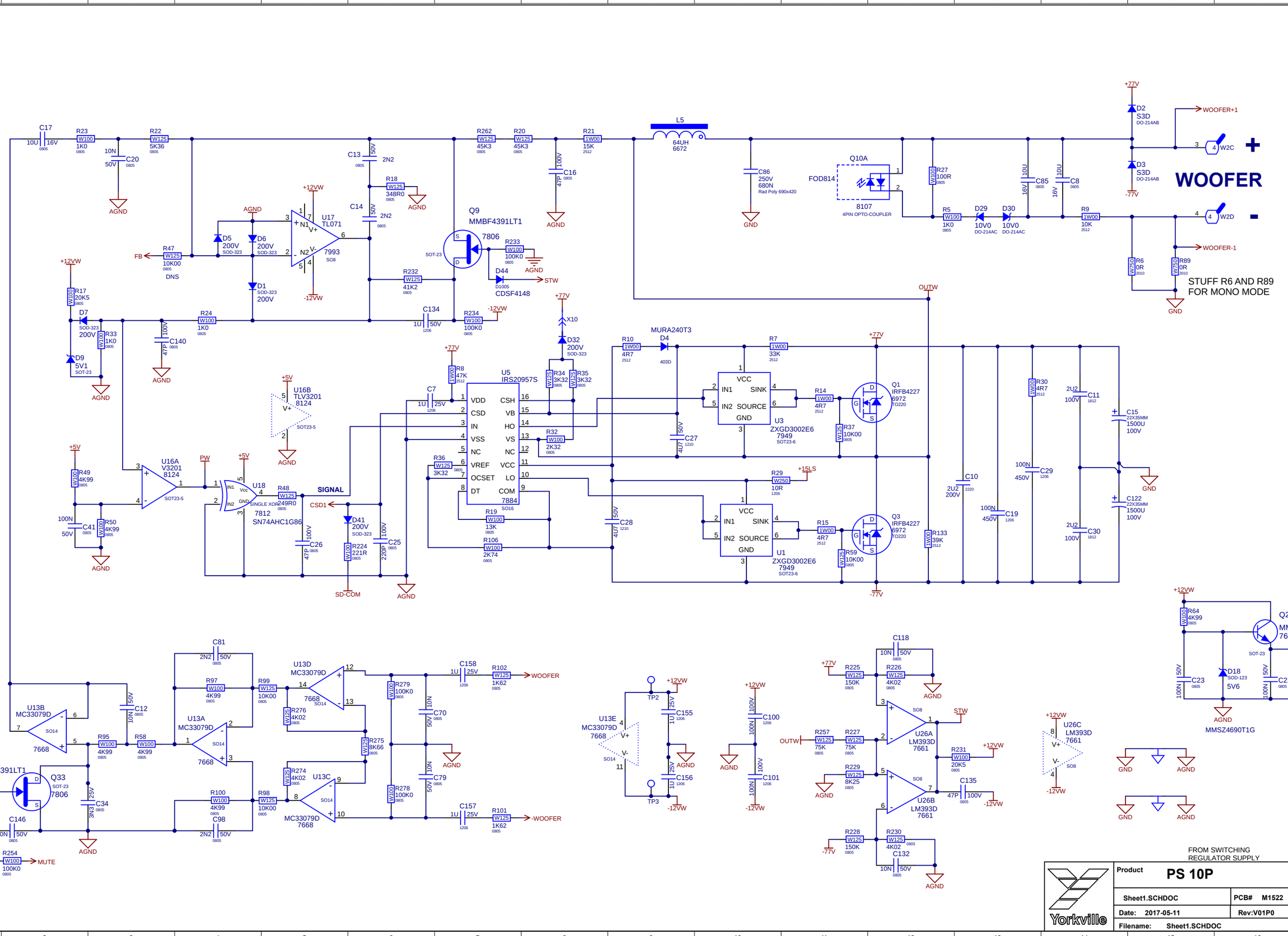
WOOFER
STUFF R6 AND R89
FOR MONO MODE
MMSZ4690T1G
+5.06V
FROM SWITCHING
REGULATOR SUPPLY
Yorkville
Product
PS 10P
Sheet1.SCHDOC
PCB# M1522
Sheet 2 of 6
Date: 2017-05-11
Rev:V01P0
YsType:YsType
Filename: Sheet1.SCHDOC

FOR PS10P ALL COMPONENTS ENCLOSED ARE DNS

BI AMP WOOFER

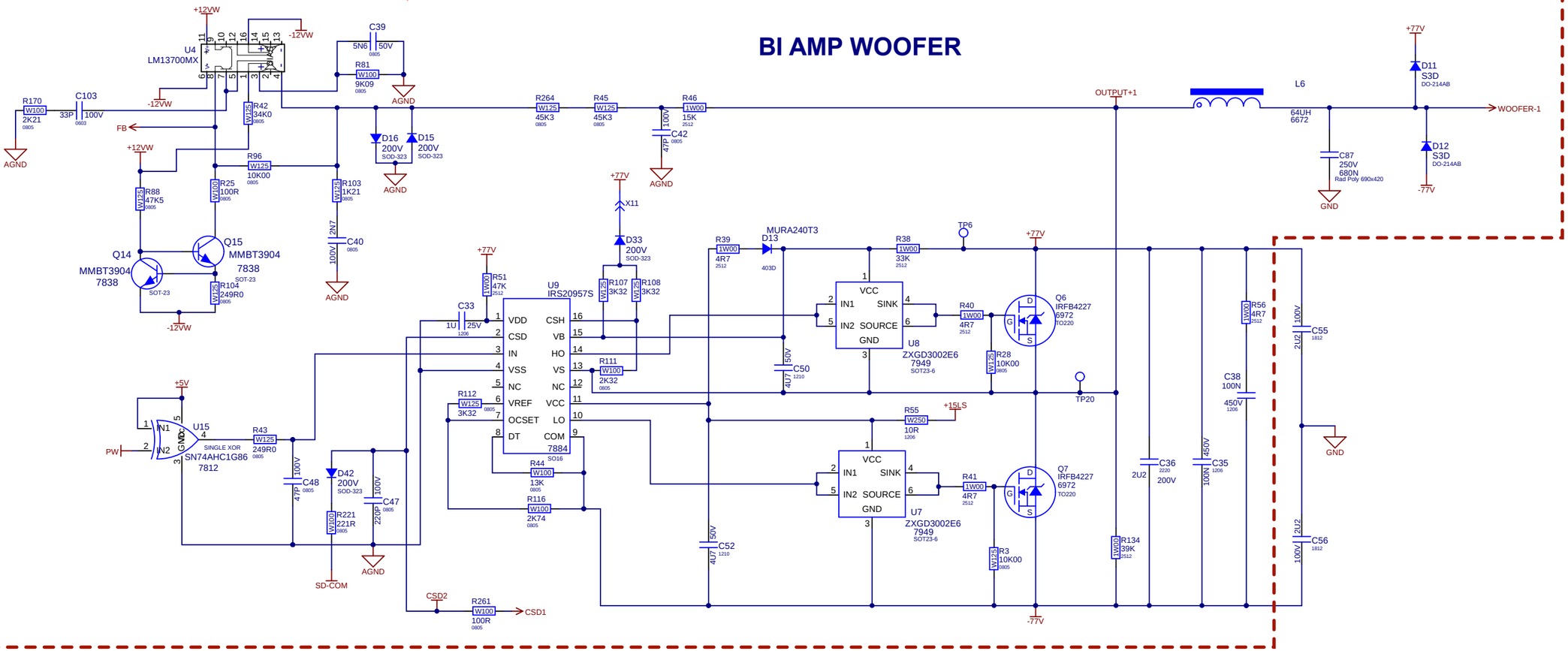

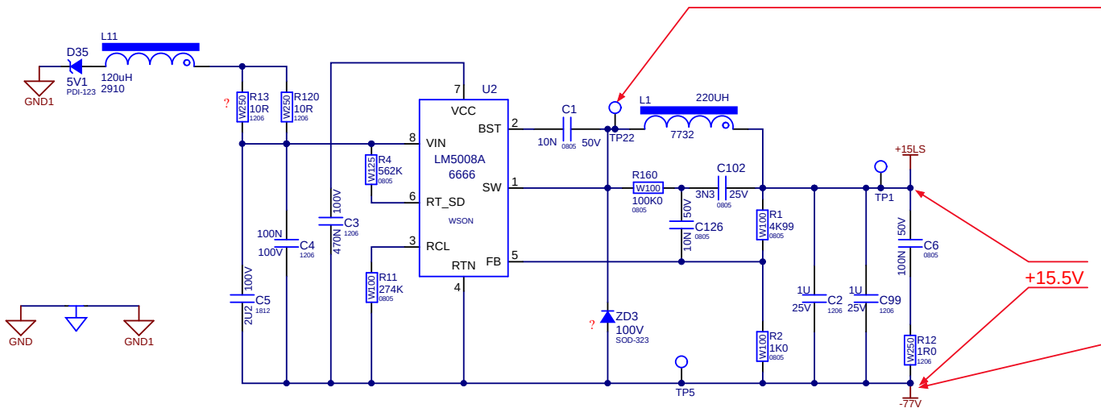

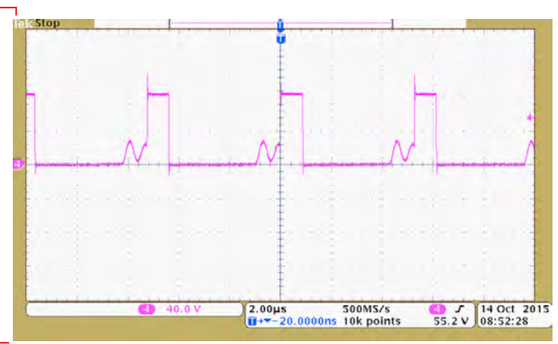

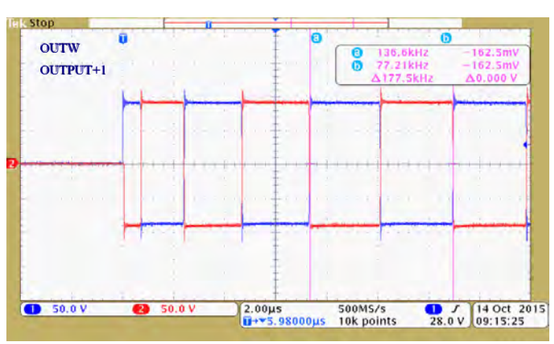

Yorkville	Product **PS 10P**		
	SheeT2.SCHDOC	PCB# M1522	Sheet 3 of 6
	Date: 2017-07-07	Rev:V01P0	YsType:YsType
	Filename: SheeT2.SCHDOC		

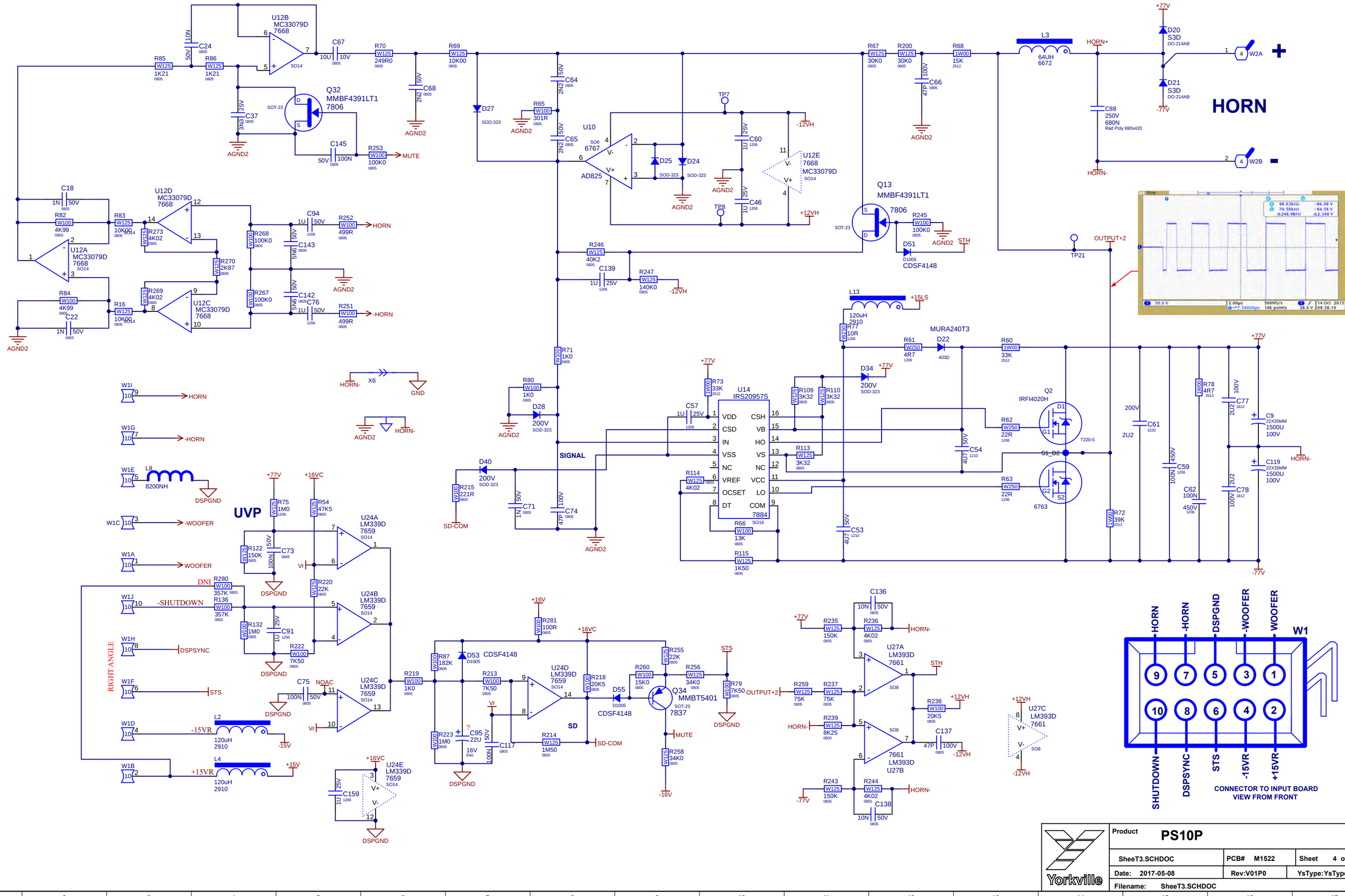
U12B MC33079D 7668
SO14
C24 10N 50V 0805
R85 W125 1K21 0805
R86 W125 1K21 0805
C67 10U 10V 0805
R70 W125 249R0 0805
R69 W125 10K00 0805
C68 2N2 50V 0805
AGND2
C37 3N3 25V 0805
Q32 MMBF4391LT1 7806
SOT-23
C145 100N 50V 0805
R253 W100 100K0 0805
MUTE
D27 SOD-323
C64 2N2 50V 0805
R65 W100 301R 0805
C65 2N2 50V 0805
U10 AD825 SO8 6767
D25 D24 SOD-323
TP7
TP8
C60 1U 25V 1206
C46 1U 25V 1206
-12VH
+12VH
U12E 7668 MC33079D SO14
R67 W125 30K0 0805
R200 W125 30K0 0805
C66 47P 100V 0805
R68 1W00 15K 2512
L3 64UH 6672
HORN+
HORN-
C88 250V 680N Rad Poly 690x420
D20 S3D DO-214AB
D21 S3D DO-214AB
+77V
-77V
W2A
W2B
HORN
Q13 MMBF4391LT1 7806
SOT-23
R245 W100 100K0 0805
D51 D1005 CDSF4148
STH
TP21
OUTPUT+2
C18 1N 50V 0805
R82 W100 4K99 0805
R83 W125 10K00 0805
U12A MC33079D 7668 SO14
R84 W100 4K99 0805
R16 W125 10K00 0805
C22 1N 50V 0805
U12D MC33079D 7668
R273 4K02 0805
R270 2K87 0805
R269 4K02 0805
U12C MC33079D 7668
R268 100K0 0805
R267 100K0 0805
C94 1U 50V 1206
R252 W100 499R 0805
HORN
C143 5N6 50V 0805
C142 5N6 50V 0805
C76 1U 50V 1206
R251 W100 499R 0805
-HORN
AGND2
R246 W125 40K2 0805
C139 1U 25V 1206
R247 W125 140K0 0805
-12VH
L13 120uH 2910
+15LS
R77 W250 10R 1206
R61 W250 4R7 1206
D22 403D
MURA240T3
R60 1W00 33K 2512
D34 200V SOD-323
+77V
R71 W100 1K0 0805
R80 W100 1K0 0805
D28 200V SOD-323
U14 IRS20957S
VDD CSH
CSD VB
IN HO
VSS VS
NC NC
VREF VCC
OCSET LO
DT COM
SIGNAL
SD
SD-COM
R73 W00 33K 2512
C57 1U 25V 1206
R109 W125 3K32 0805
R110 W125 3K32 0805
R113 W125 3K32 0805
R114 W125 4K02 0805
R66 W100 13K 0805
7884 SO16
R115 W125 1K50 0805
D40 200V SOD-323
R215 W00 221R 0805
C71 1N 0805
C74 47P 0805
C54 4U7 1210
C53 4U7 1210
Q2 IRFI4020H
D1 G1 S1_D2 G2 S2
T220-5
6763
R62 W250 22R 1206
R63 W250 22R 1206
R72 W00 39K 2512
C61 2U2 2220
C62 100N 450V 1206
C59 100N 450V 1206
C77 2U2 1812
C78 2U2 1812
R78 1W00 4R7 2512
C9 22X35MM 1500U 100V
C119 22X35MM 1500U 100V
HORN-
-77V
W1I HORN
W1G -HORN
W1E L8 8200NH DSPGND
W1C -WOOFER
W1A WOOFER
W1J -SHUTDOWN
W1H DSPSYNC
W1F STS
W1D L2 -15VR 120uH 2910 -15V
W1B L4 +15VR 120uH 2910 +15V
RIGHT ANGLE
DNI
UVP
+16VC
+16V
U24A LM339D 7659 SO14
U24B LM339D 7659 SO14
U24C LM339D 7659 SO14
U24D LM339D 7659 SO14
U24E LM339D 7659 SO14
R75 1M0 1206
R54 47K5 0805
R122 150K 0805
C73 100N 50V 0805
R220 22K 0805
R280 DNI 357K 0805
R136 357K 0805
R132 1M0 0805
C91 1U 25V 1206
R222 7K50 0805
C75 100N 50V 0805 NOAC
R219 W100 1K0 0805
R281 W00 100R 0805
R87 W100 182K 0805
D53 D1005 CDSF4148
R213 W100 7K50 0805
R218 W00 20K5 0805
D55 D1005 CDSF4148
R223 W100 1M0 0805
C95 22U 16V Elec
C117 100N 50V 0805
R214 W125 1M50 0805
R255 W125 22K 0805
R256 W125 34K0 0805
R260 W100 15K0 0805
Q34 MMBT5401 SOT-23 7837
R79 W00 7K50 0805
STS
R258 W125 34K0 0805
-16V
C159 1U 25V 1206
R235 W125 150K 0805
R236 W125 4K02 0805
C136 10N 50V 0805
U27A LM393D 7661 SO8
R259 W125 75K 0805
R237 W125 75K 0805
R239 W125 8K25 0805
R238 W100 20K5 0805
C137 47P 100V 0805
U27B LM393D 7661 SO8
U27C LM393D 7661 SO8
R243 W125 150K 0805
R244 W125 4K02 0805
C138 10N 50V 0805
OUTPUT+2
W1
HORN -HORN DSPGND -WOOFER WOOFER
9 7 5 3 1
10 8 6 4 2
SHUTDOWN DSPSYNC STS -15VR +15VR
CONNECTOR TO INPUT BOARD
VIEW FROM FRONT
X6
GND
Yorkville
Product PS10P
SheeT3.SCHDOC
PCB# M1522
Sheet 4 of 6
Date: 2017-05-08
Rev:V01P0
YsType:YsType
Filename: SheeT3.SCHDOC

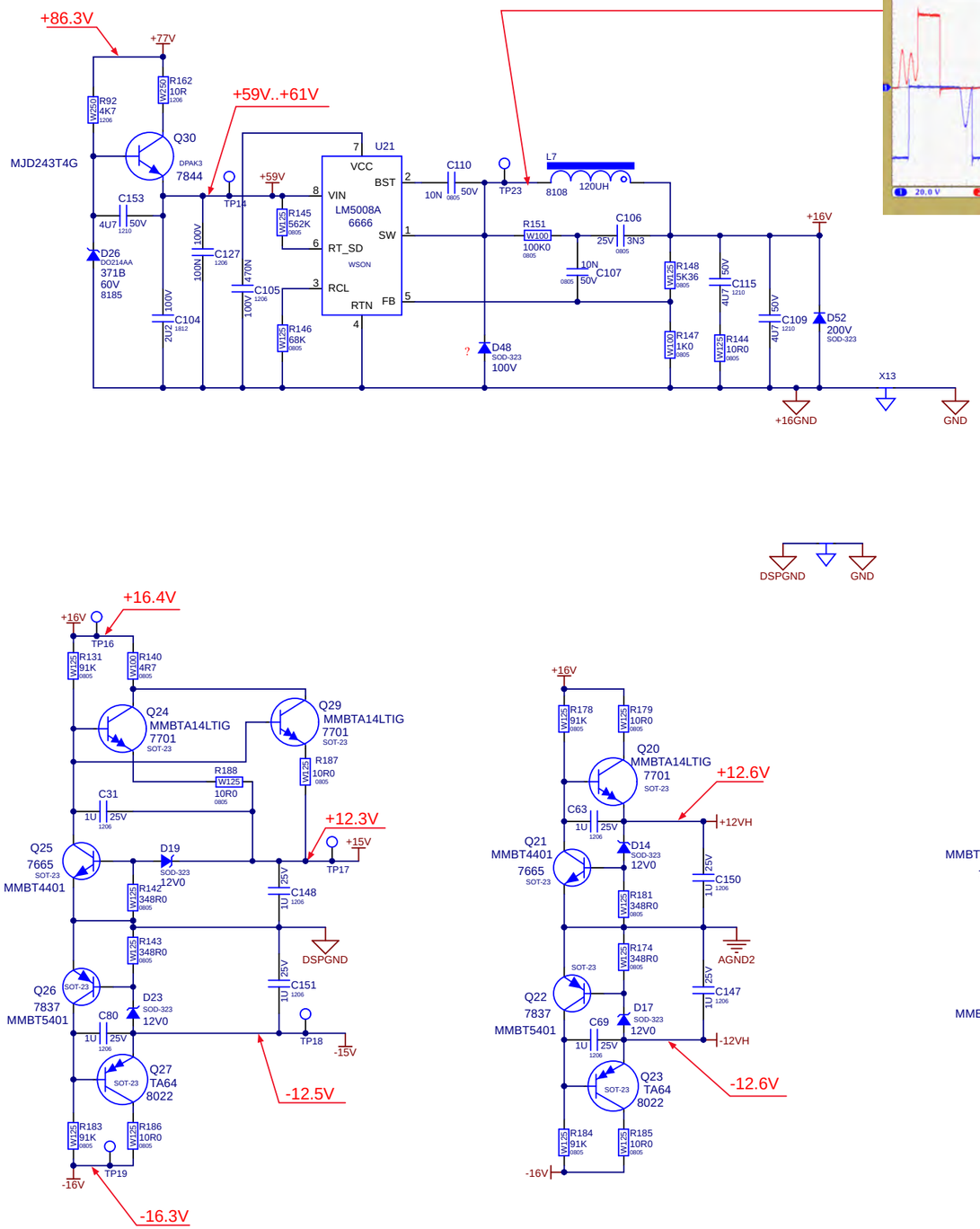

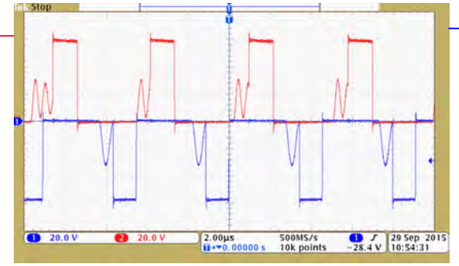

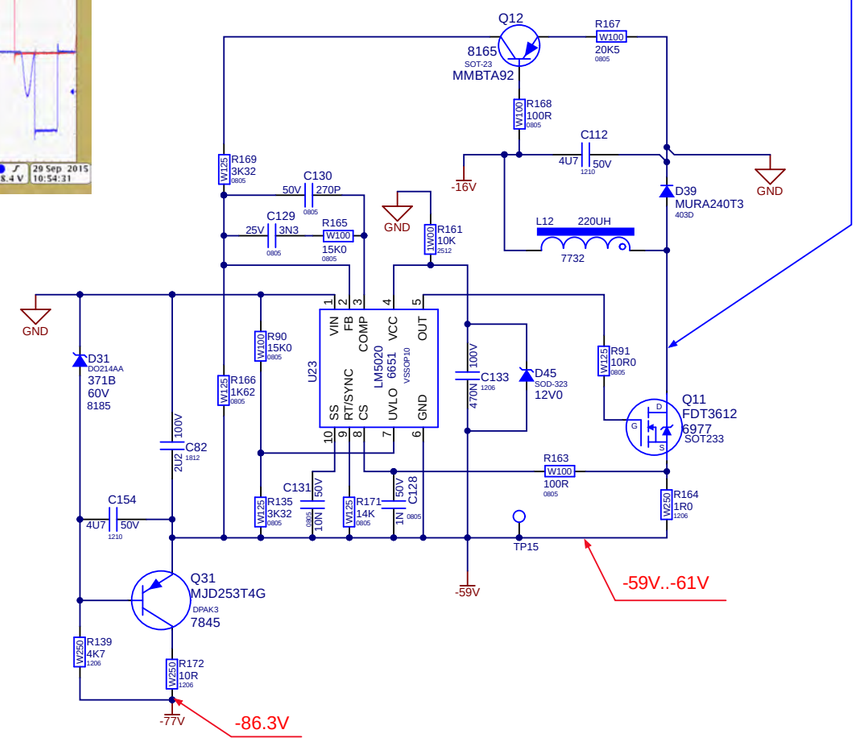

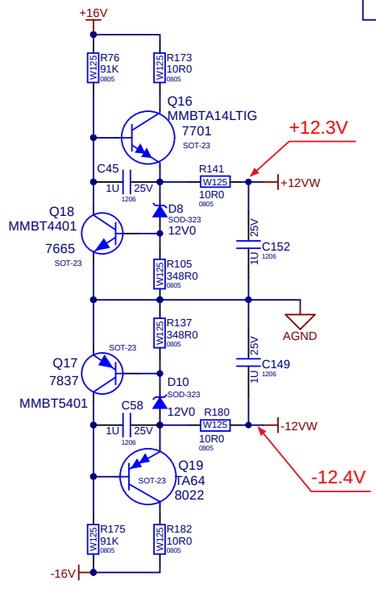

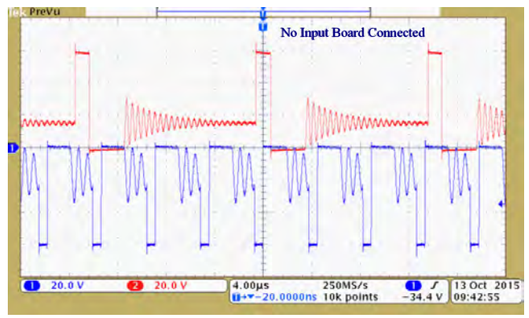

Yorkville	Section: LV Pwr Supply				
	Product(s): PS10P				
	PCB#: M1522	Rev#: V01	EML Rev#: XX	Sheet 5 Of 6	
	Modified: 2017-07-11	File: LV-PS.SchDoc		Tmp Rev: TemplateRev	

DESIGN HISTORY AND INFORMATION

CHANGE HISTORY

#	DATE	VER#	PC#	DESCRIPTION OF CHANGE
1	12-DEC-2016	V01P0		PROTOTYPE
2	19-JUN-2017	V01		RELEASED FOR PRODUCTION
3	11-JUL-2017	.	.	REVISED NOTES FOR PRE-ASSEMBLY FOR PRE-SOLDERING LARGE COILS
4		.	.	REVISED NOTES FOR ADDING RTV POST-WAVE TO L204
5		.	.	
6		.	.	.
7		.	.	.
8		.	.	.
9	.	.	.	.
10	.	.	.	.
11	.	.	.	.
12	.	.	.	.
13	.	.	.	

#	DATE	VER#	PC#	DESCRIPTION OF CHANGE
1	.	.	.	.
2	.	.	.	.
3	.	.	.	.
4	.	.	.	.
5	.	.	.	.
6	.	.	.	.
7	.	.	.	.
8	.	.	.	.
9	.	.	.	.
10	.	.	.	.
11	.	.	.	.
12	.	.	.	.
13	.	.	.	.

#	DATE	VER#	PC#	DESCRIPTION OF CHANGE
1	.	.	.	.
2	.	.	.	.
3	.	.	.	.
4	.	.	.	.
5	.	.	.	.
6	.	.	.	.
7	.	.	.	.
8	.	.	.	.
9	.	.	.	.
10	.	.	.	.
11	.	.	.	.
12	.	.	.	.
13	.	.	.	.

POTENTIOMETERS AND KNOBS

POTENTIOMETERS AND KNOBS			
REF	FUNCTION	POT#	KNOB#
.	.	.	.
.	.	.	.
.	.	.	.
.	.	.	.
.	.	.	.
.	.	.	.
.	.	.	.
.	.	.	.
.	.	.	.
.	.	.	.
.	.	.	.
.	.	.	.
.	.	.	.
.	.	.	.

PINOUT DIAGRAMS

THIS SHEET CONTAINS A CHANGE HISTORY LOG, A LIST OF THE POTS & KNOBS AND A LEADS & PINS REFERENCE SECTION.

Yorkville

Section: Design Information And History				
Product(s): PS10P				
PCB#: M1522	Rev#: V01	EML Rev#: XX	Sheet 6 Of 6	
Modified: 2017-07-11	File: History.SchDoc		Tmp Rev: TemplateRev	

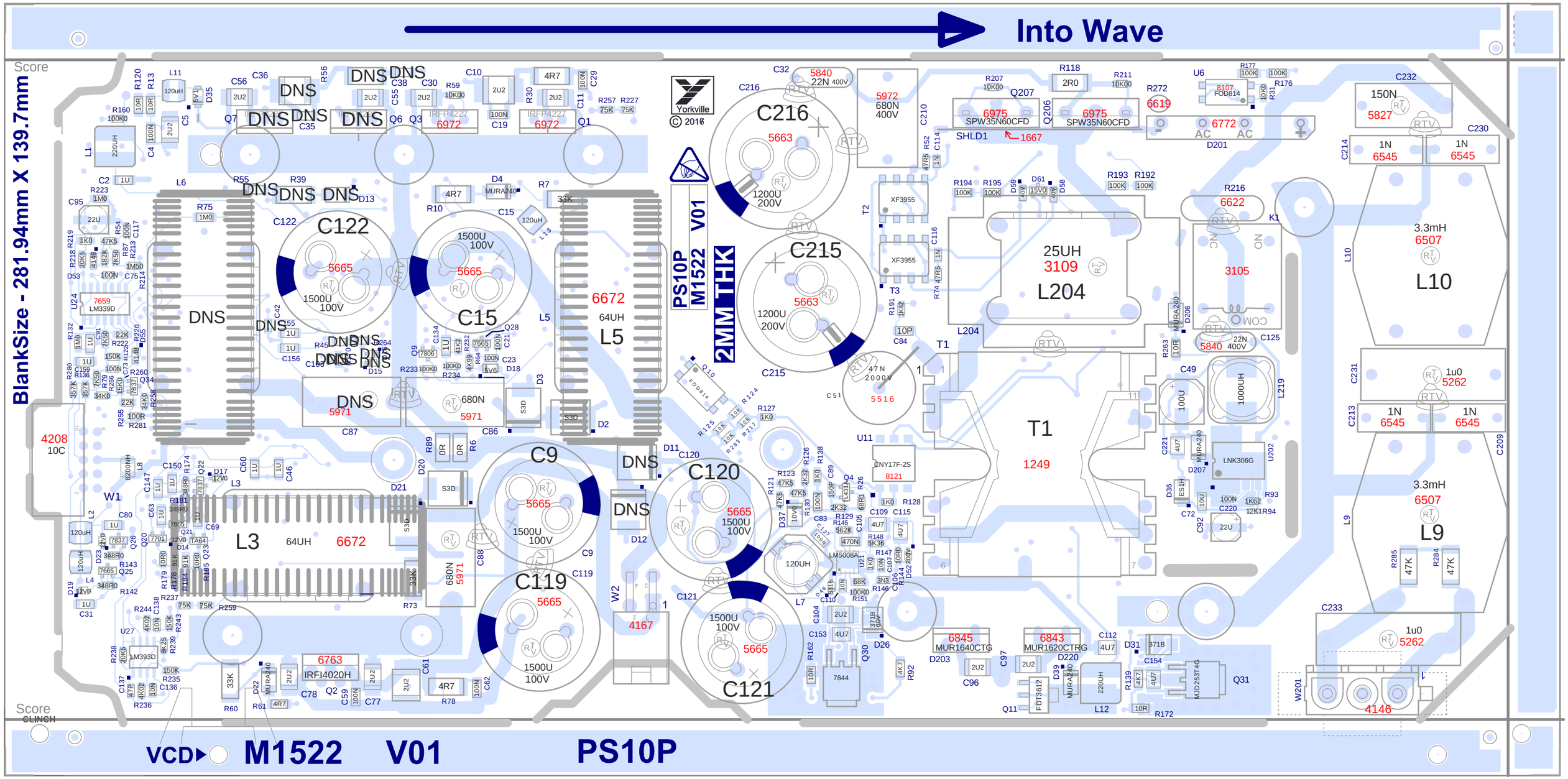

Into Wave
BlankSize - 281.94mm X 139.7mm
Score
Yorkville
© 2016
PS10P
M1522
V01
2MM THK
C122
C15
C216
C215
C9
C119
C120
C121
L3
L5
L204
L10
L9
T1
1249
25UH
3109
3105
3.3mH
6507
1u0
5262
1N
6545
150N
5827
6672
64UH
5971
680N
5665
1500U
100V
1200U
200V
5840
22N
5972
680N
400V
6975
SPW35N60CFD
6772
6619
6622
6845
MUR1640CTG
6843
MUR1620CTRG
6763
IRFI4020H
4167
4146
4208
10C
VCD
M1522
V01
PS10P

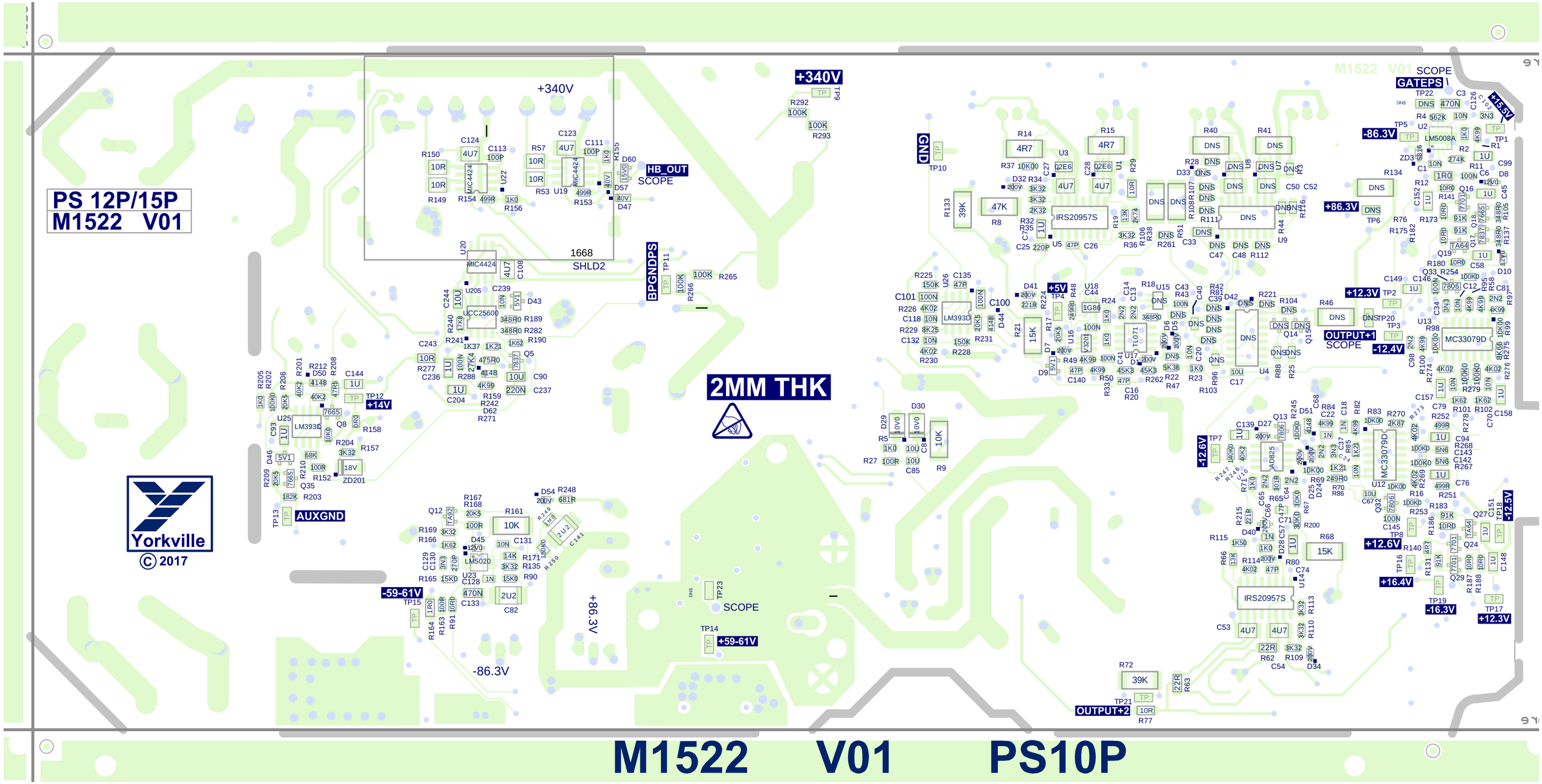
PS 12P/15P
M1522 V01
Yorkville
© 2017
+340V
HB_OUT
SCOPE
1668
SHLD2
BPGNDPS
2MM THK
AUXGND
+14V
-59-61V
+86.3V
-86.3V
+59-61V
GND
IRS20957S
+5V
+12.3V
OUTPUT+1
-12.4V
-12.6V
+12.6V
+16.4V
-16.3V
+12.3V
-12.5V
+15.5V
GATEPS
OUTPUT+2
M1522 V01 PS10P

PCB PRE-ASSEMBLY DOCUMENTATION

USE THESE NOTES TO ASSEMBLE OR PREPARE PARTS
BEFORE INSERTING INTO PCB AND ALSO PRIOR TO WAVE

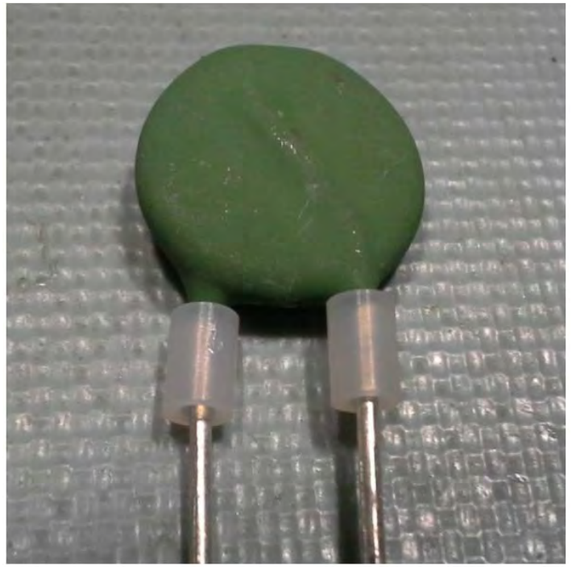

FOR YS PN 6622 USE NYLON SPACER PN 8607

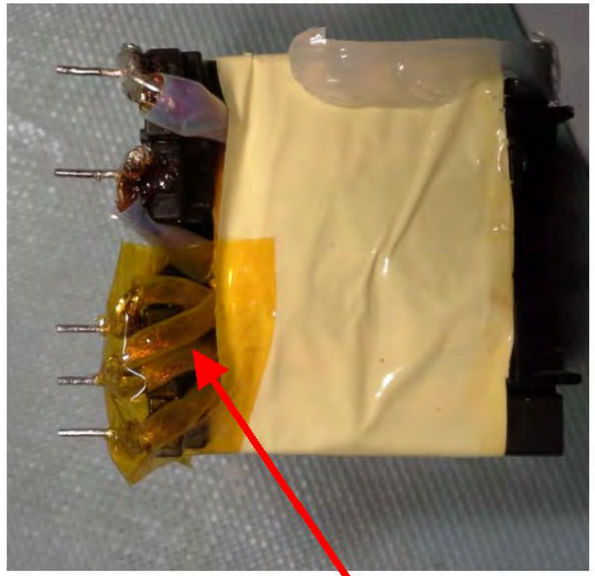

APPLY 1" WIDE KAPTON TAPE OVER PIN AND LEADS ON T1

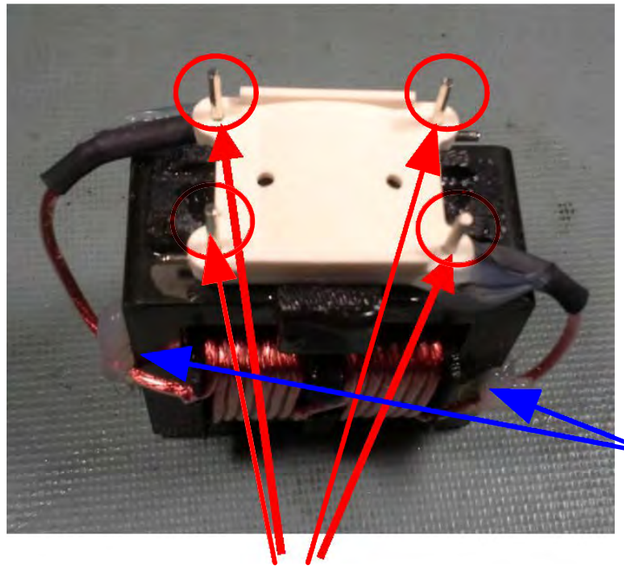

APPLY A SMALL AMOUNT OF RTV WHERE LEADS TOUCH THE CORNERS OF THE COIL. DO NOT APPLY RTV TO BASE OF COIL BEFORE INSERTION INTO BOARD.

DIP LEADS OF COIL (L204 YS#3109) IN FLUX THEN IN SOLDER BEFORE PLACEMENT IN PCB

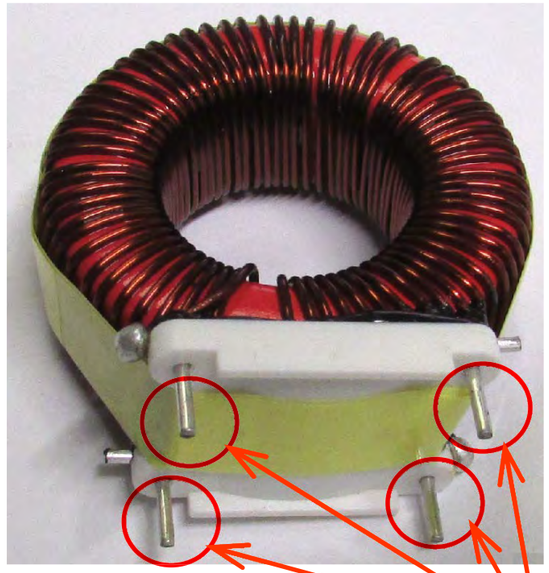

DIP LEADS OF ALL COILS (L3, L5, L6 YS#6672) IN FLUX THEN IN SOLDER BEFORE PLACEMENT IN PCB

THIS SHEET CONTAINS SPECIAL PRODUCTION NOTES AND A LIST OF PCB HARDWARE PARTS REQUIRED FOR THE BUILD.

Yorkville	Section: Assembly Documentation				
	Product(s): PS10P				
	PCB#: M1522	Rev#: V01	EML Rev#: XX	Sheet 7 Of 8	
	Modified: 8/30/2017	File: Pre-Assembly.SchDoc		Tmp Rev: TemplateRev	

PCB ASSEMBLY DOCUMENTATION

SPECIAL PRODUCTION NOTES

1. THERMISTOR R272 (YS# 6619) IS HAND INSERTED.

2. DO NOT STUFF COMPONENTS MARKED WITH DNS. IN THE LAYOUT PADS WITH NO COMPONENT OUTLINE OR REF DESIGNATOR ARE ALSO NOT STUFFED.

3. ADD APPROPRIATE SPACERS TO LEGS OF XTRS AND RECTIFIERS AS INDICATD IN PICS 1-3.
   SEE ALSO PRE-ASSEMBLY NOTES

4. CUT LEADS SHORT ON ALL HAND PLACED TRANSISTORS.

5. NOTE THAT THIS BOARD USES A WAVE SHIELD THAT REQUIRES THE SOLDER WAVE BE SET TO THE PROPER HEIGHT AND SPEED.

6. AFTER WAVE SOLDER. PLACE SHLD2 (YS#1668) ON BOTTOM OF BOARD AND HAND SOLDER.

7. APPLY RTV WHERE INDICATED AND BETWEEN TALL COMPONENTS AND IN THE HOLES PROVIDED. NOTE THAT L204 MUST NOT HAVE RTV APPLIED UNDER PART UNTIL AFTER THE WAVE SOLDERING PROCESS AND IN THE HOLE ON THE BOTTOM OF THE BOARD LOCATED NEAR U20.

8. AFTER WAVE AND PCB FINISHING, PLEASE PLACE BOARD ON RACK WITH LARGE COMPONENTS FACING DOWN. SEE PICTURE

9. BEFORE TRANSPORTING TO WIRING PLEASE SEPARATE BOARD FROM PANEL USING PIZZA CUTTER
   THEN BREAKING NON SCORED END GENTLY WITH APPROPRIATE TOOL



BOARDS PLACED UPSIDE DOWN ON RACK AFTER WAVE SOLDERING

PIC. 2



ADD 1 SPACER YS# 8607 TO MIDDLE REAR LEG OF Q2 AS SHOWN

PIC. 1

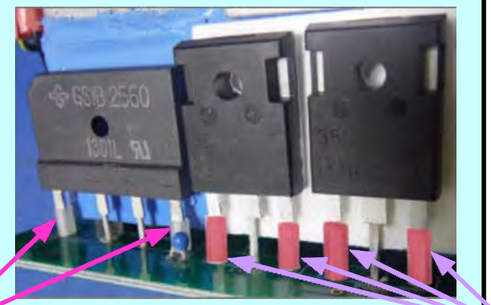

8607 **9067**

ADD NUMBERS OF SPACERS YS# 8607 AND 9067 INDICATED TO LEGS SHOWN FOR D201, Q206 AND Q207

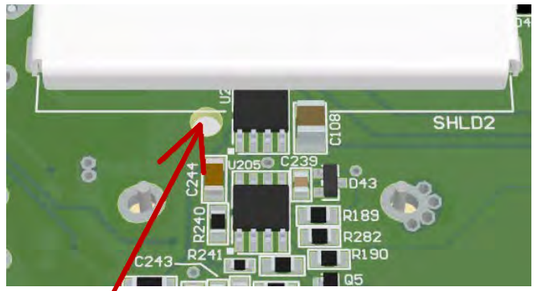

RTV HOLE FOR L204 - SEE NOTE 7.

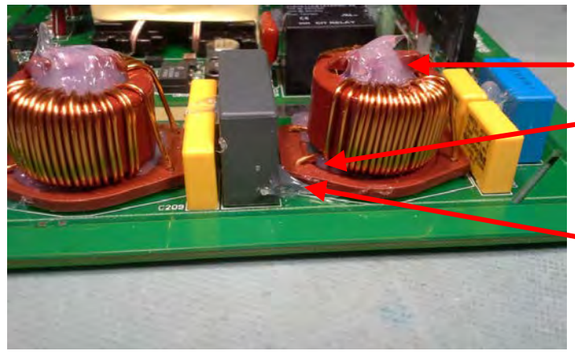

INJECT SILICONE INTO COILS, NOTE SILICONE MUST COME OUT FOR A GOOD FILL

SILICONE IS ALSO INJECTED FROM BOTTOM OF PCB, IT MUST COME OUT UNDER PART.

HAND SOLDER SHLD2 IN 4 PLACES

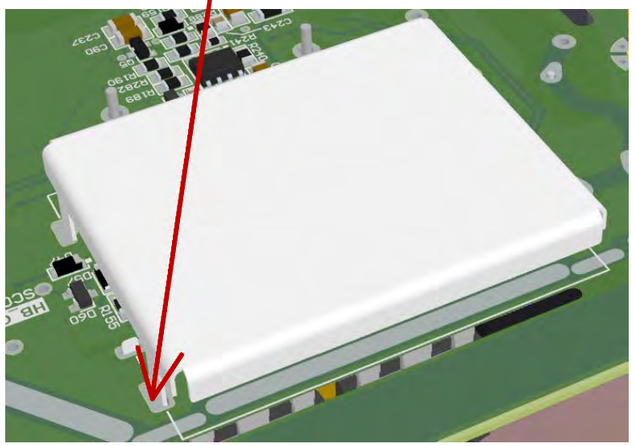

AFTER WAVE SOLDERING, SOLDER SHLD 2 TO BOTTOM OF PCB WHERE SHOWN

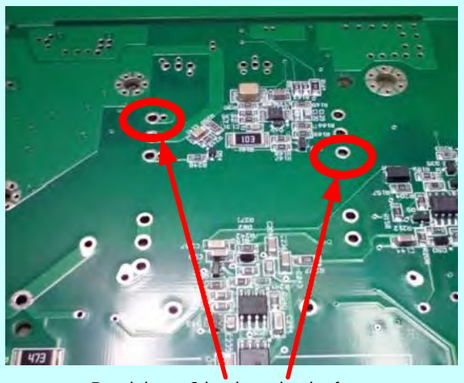

Bend these 2 leads on back of board after inserting T1 (YS# 1226)

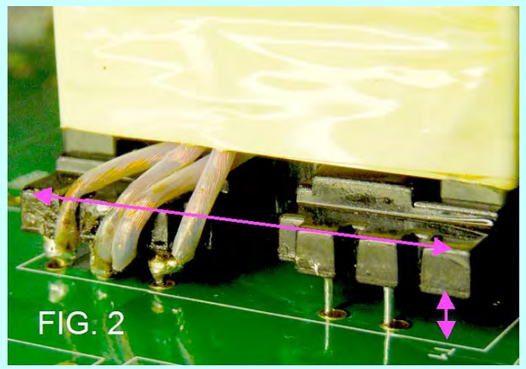

Bending the 2 leads indicated in Fig 1 should level the XFMR T1 as shown in Fig 2 above

PIC. 3

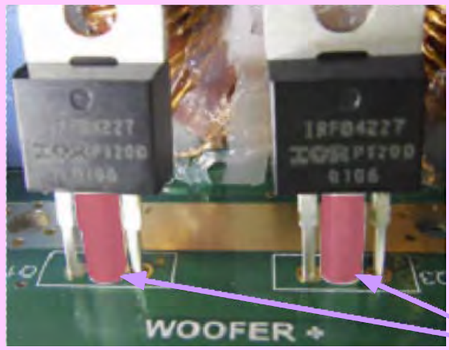

9067

ADD A #9067 SPACER TO THE MIDDLE LEG OF Q1, Q3, D203 AND D220

THIS SHEET CONTAINS SPECIAL PRODUCTION NOTES AND A LIST OF PCB HARDWARE PARTS REQUIRED FOR THE BUILD.

Yorkville	Section: Assembly Documentation				
	Product(s): PS10P				
	PCB#: M1522	Rev#: V01	EML Rev#: XX	Sheet 7 Of 8	
	Modified: 8/30/2017	File: Assembly.SchDoc		Tmp Rev: TemplateRev	

DESIGN HISTORY AND INFORMATION

CHANGE HISTORY

#	DATE	VER#	PC#	DESCRIPTION OF CHANGE
1	12-DEC-2016	V01P0		PROTOTYPE
2	19-JUN-2017	V01		RELEASED FOR PRODUCTION
3		.	.	
4		.	.	
5		.	.	
6		.	.	.
7		.	.	.
8		.	.	.
9	.	.	.	.
10	.	.	.	.
11	.	.	.	.
12	.	.	.	.
13	.	.	.	

#	DATE	VER#	PC#	DESCRIPTION OF CHANGE
1	.	.	.	.
2	.	.	.	.
3	.	.	.	.
4	.	.	.	.
5	.	.	.	.
6	.	.	.	.
7	.	.	.	.
8	.	.	.	.
9	.	.	.	.
10	.	.	.	.
11	.	.	.	.
12	.	.	.	.
13	.	.	.	.

#	DATE	VER#	PC#	DESCRIPTION OF CHANGE
1	.	.	.	.
2	.	.	.	.
3	.	.	.	.
4	.	.	.	.
5	.	.	.	.
6	.	.	.	.
7	.	.	.	.
8	.	.	.	.
9	.	.	.	.
10	.	.	.	.
11	.	.	.	.
12	.	.	.	.
13	.	.	.	.

POTENTIOMETERS AND KNOBS

POTENTIOMETERS AND KNOBS			
REF	FUNCTION	POT#	KNOB#
.	.	.	.
.	.	.	.
.	.	.	.
.	.	.	.
.	.	.	.
.	.	.	.
.	.	.	.
.	.	.	.
.	.	.	.
.	.	.	.
.	.	.	.
.	.	.	.
.	.	.	.
.	.	.	.

PINOUT DIAGRAMS

THIS SHEET CONTAINS A CHANGE HISTORY LOG, A LIST OF THE POTS & KNOBS AND A LEADS & PINS REFERENCE SECTION.

Yorkville

Section: Design Information And History
Product(s): PS10P
PCB#: M1522 | Rev#: V01 | EML Rev#: XX | Sheet 6 Of 6
Modified: 8/30/2017 | File: History.SchDoc | Tmp Rev: TemplateRev

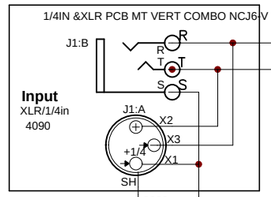

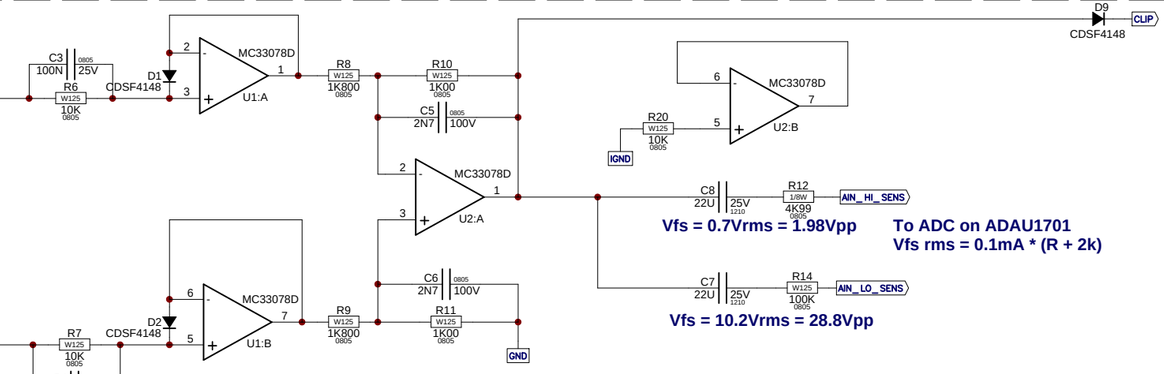

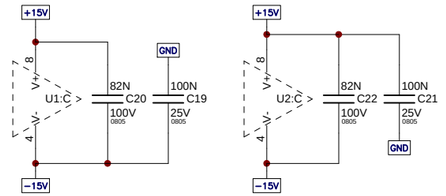

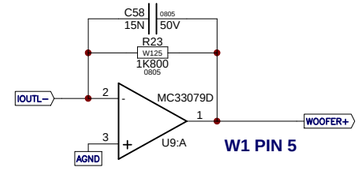

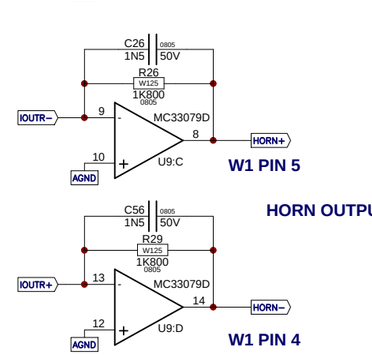

LOW VOLTAGE SUPPLY

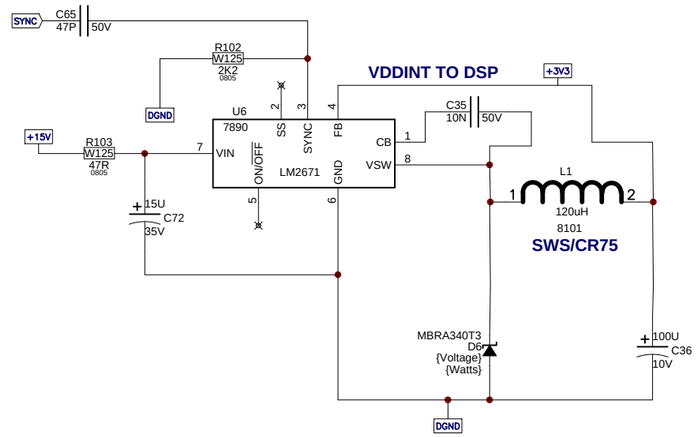

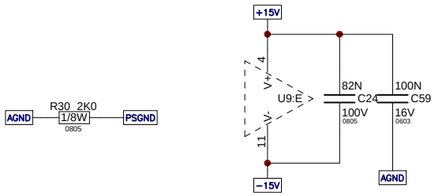

Yorkville	Product **PS Preamp**		
	ANALOG	PCB# M1523	Sheet 1 of 3
	Date: Tue Jun 02, 2015	Rev:1.00	YsType:{Company N
	Filename: M1523V01SCH.sch2006		

LINE GAIN

Line In
J4
TIP
RING
R32 W125 10K 0805
R34 W125 10K 0805
R73 W125 1K00 0805
R74 W125 1K00 0805
R55 W125 10K 0805
R57 W125 10K 0805
47P C47 50V 0805
47P C46 50V 0805
C27 47P 0805 50V
IGND
D11 CDSF4148 CLIP
MC33078D
U13:B
1210 25V 22U C29
R41 W125 33K 0805
GND
R54 W125 4K7 0805
Line Level
P1:A 4459 B 10K
R58 1/8W 100R 0805
C37 22U 25V 1210
U13:A
MC33078D
D13 CDSF4148 CLIP
R72 W125 1K00 0805
R77 W125 10K 0805
R79 W125 10K 0805
MC33078D
U11:B
R80 W125 330R0 0805
R88 W125 1K00 0805
Mixer Enable
S1:B 3522 UP DOWN
NC COM NO
S1:A 3522 UP DOWN
Alternate
R90 W125 1K00 0805
R89 W125 330R0 0805
MIX+
MIX-
R78 W125 10K 0805
R28 1/8W 2K0 0805
Line In
J5 3466
PCB MT
GOLD 24MM
R38 1/8W 2K74 0805
R39 1/8W 2K74 0805
R68 W125 10K 0805
470P C30 50V 0603
TL072
U12:A
R97 W125 10K 0805
R98 W125 10K 0805
TL072
U12:B
R99 W125 10K 0805
R100 W125 10K 0805
Mic In
4010 J6
R62 W125 470R 0805
R63 W125 470R 0805
R67 W125 470R 0805
R69 W125 470R 0805
470P C41 50V 0603
470P C42 50V 0603
C43 680P 0805 50V
C44 680P 0805 50V
R70 1/8W 2K74 0805
R71 1/8W 2K74 0805
MC33078D
U10:A
D10 CDSF4148 CLIP
0805 25V 100N C33
R56 W125 1K00 0805
R53 W125 33K 0805
Mic Level
P2:A 4459 B 10K
R75 W125 1K00 0805
C45 22U 25V 1210
R76 1/8W 20K5 0805
C52 47P 0805 50V
CDSF4148 CLIP D12
U10:B
MC33078D
C34 100N 0805 25V
C28 68N 805 50V
R15 1/8W 4K99 0805
MIC H.P.
U11:A
MC33078D
R27 150K 0805 W125
3696
K1:A
K1:B
+15V
−15V
U13:C
U12:C 82N C48 100V 0805 100N C49 25V 0805
U10:C 82N C50 100V 0805 100N C51 25V 0805
U11:C 82N C53 100V 0805 100N C54 25V 0805
R91 0.1W 18K2 0805
0W2 D7 18V0
MMBT5401 Q1 7837 SOT-23
D8 CDSF4148
R92 W125 1K00 0805

Product **PS Preamp**		
MIXER	PCB# M1523	Sheet 2 of 3
Date: Tue Jun 02, 2015	Rev:1.00	YsType:{Company N
Filename: M1523V01SCH.sch2006		

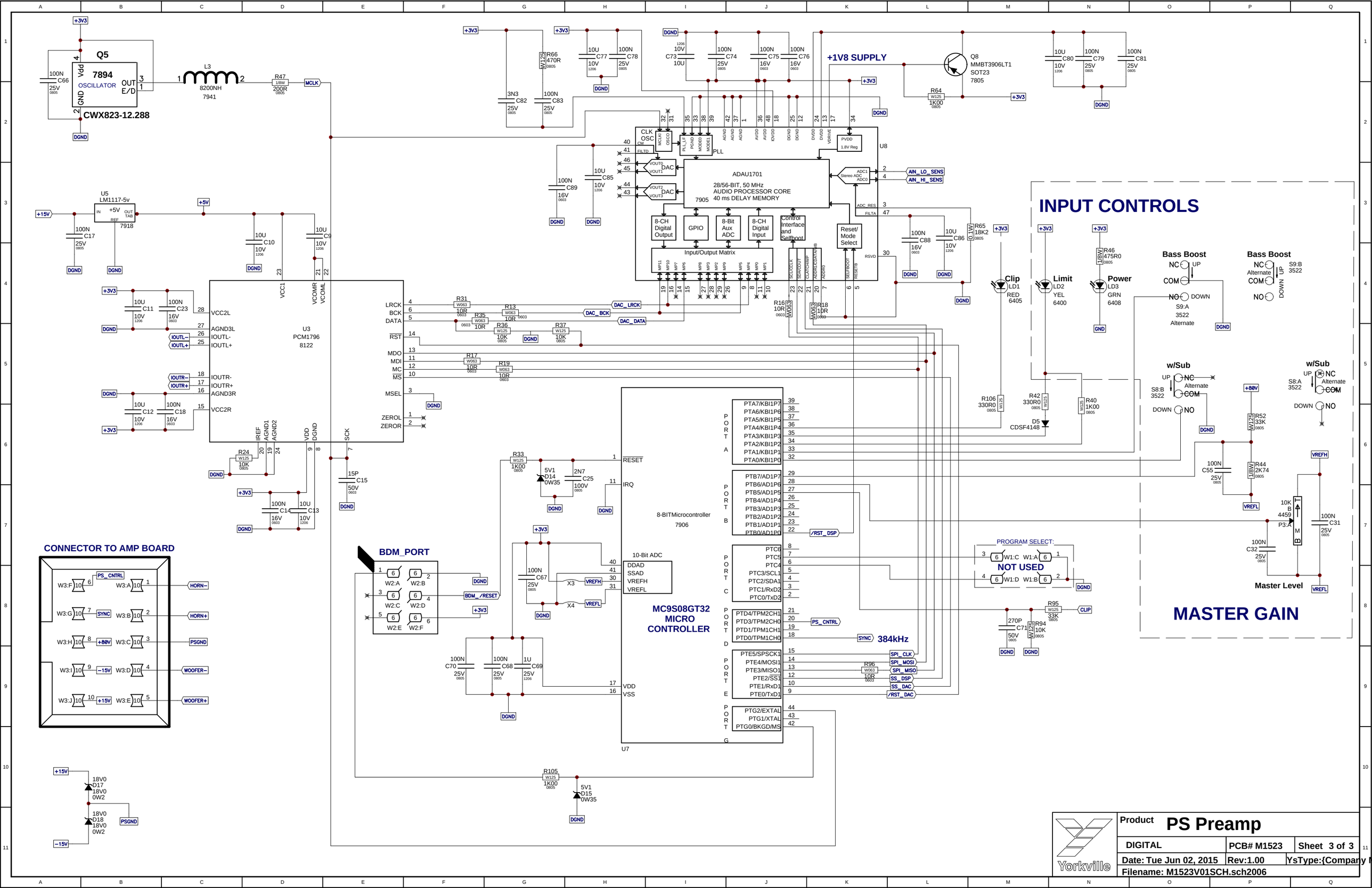

Product **PS Preamp**

DIGITAL	PCB# M1523	Sheet 3 of 3
Date: Tue Jun 02, 2015	Rev:1.00	YsType:{Company
Filename: M1523V01SCH.sch2006		

M1523 - DATABASE HISTORY

MODEL(S):- PS Preamp

#	DATE	VER#	DESCRIPTION OF CHANGE
1	06-JUN-2013	V01	PC8549: values change R27, R95. See PC. GG
2	17-JUL-2013	.	PC8554: Change U12 to TL072 (YS#SM7669). - ML
3	02-JUN-2015	.	PC8797: Do Not Stuff W1 and program setting jumpers.
4	D	V	N
5	D	V	N
6	D	V	N
7	D	V	N
8	D	V	N
9	D	V	N
10	D	V	N
11	D	V	N
12	D	V	N
13	D	V	N
1	D	V	N
2	D	V	N
3	D	V	N
4	D	V	N
5	D	V	N
6	D	V	N
7	D	V	N
8	D	V	N
9	D	V	N
10	D	V	N
11	D	V	N
12	D	V	N
13	D	V	N

POTENTIOMETERS AND KNOBS

M1523 - POTS LIST

MODEL(S):- PS Preamp

REF	FUNCTION	PART#	KNOB	STYLE
P1	Line Level	4459	8653	P32
P2	Mic Level	4459	8653	P32
P3	Master Level	4459	8653	P32
R	F	P	K	N
R	F	P	K	N
R	F	P	K	N
R	F	P	K	N
R	F	P	K	N
R	F	P	K	N
R	F	P	K	N
R	F	P	K	N
R	F	P	K	N
R	F	P	K	N

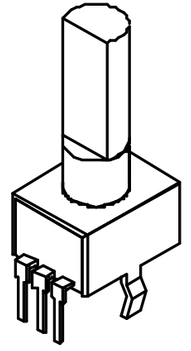

"STYLE_P32"

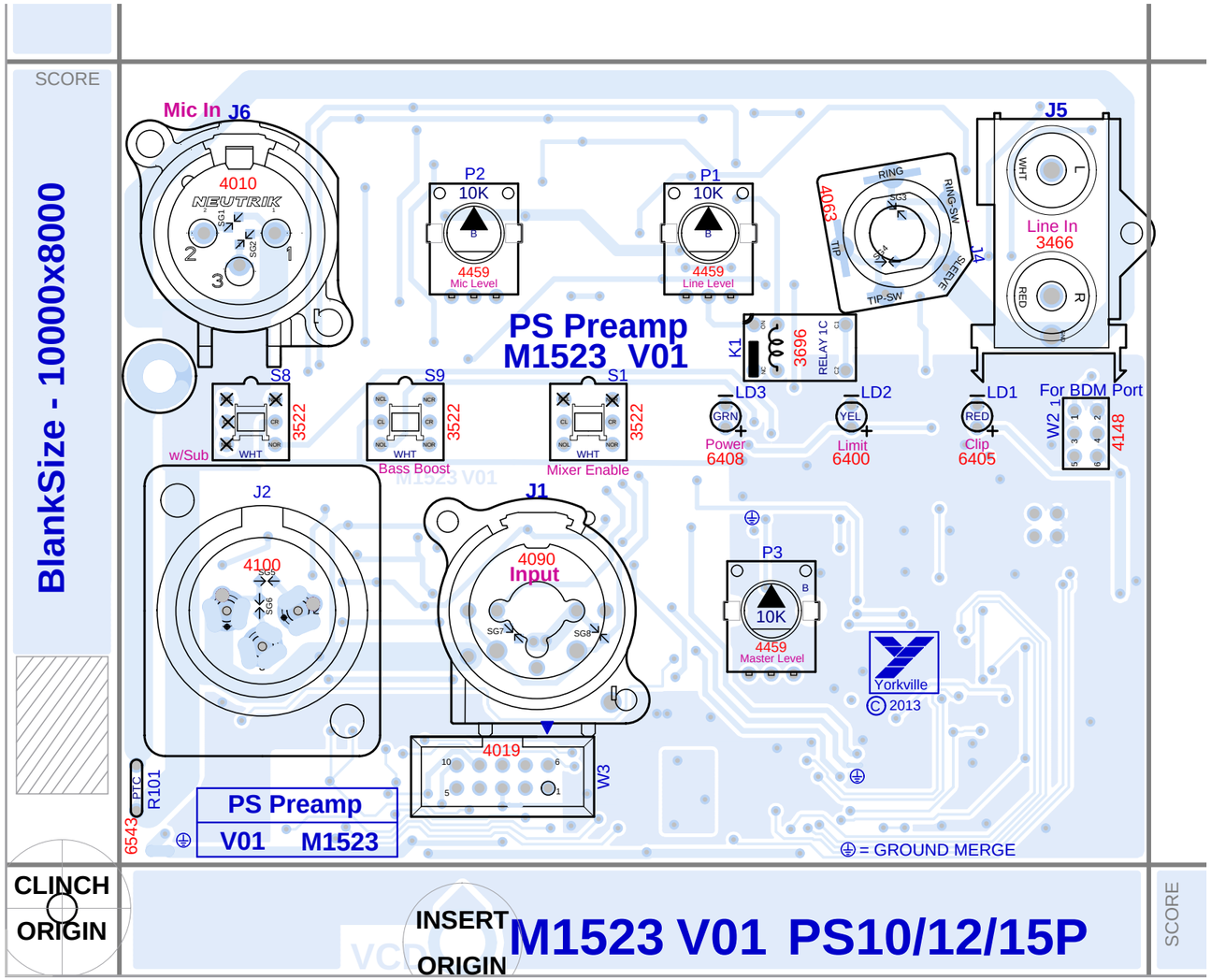

Top Side

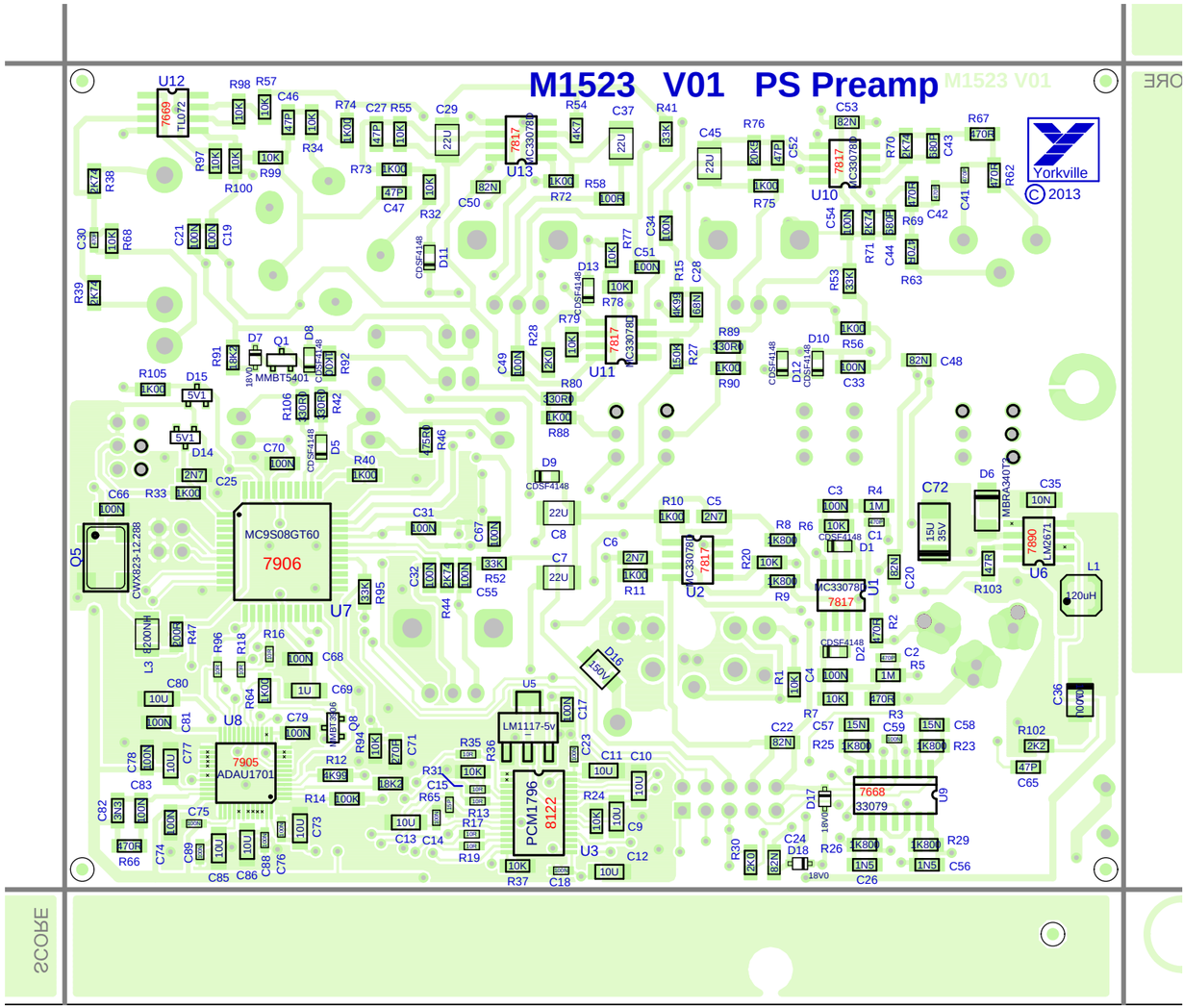

Flip Side

M1523 V01

SEE LAYOUT DOCUMENTATION

SEE LAYOUT DIAGRAM

M1523 V01 PRODUCTION NOTES

1. Adjust wave to proper settings and height to solder with SMT component heat shield.

2. Keep all connectors flush mounted with a jig during wave soldering.

3. Add 0.9" LED spacer (YS#4007) to LD1, LD2 and LD3.

SEE LAYOUT DIAGRAM

M1523 - DATABASE HISTORY

MODEL(S):- PS Preamp

#	DATE	VER#	DESCRIPTION OF CHANGE
1	06-JUN-2013	V01	PC8549: values change R27, R95. See PC. GG
2	17-JUL-2013	.	PC8554: Change U12 to TL072 (YS#SM7669). - ML
3	02-JUN-2015	.	PC8797: Do Not Stuff W1 and program setting jumpers.
4	29-JUN-2015	.	PC8814: Replace W2 right angle hdr (YS#4166)
5	.	.	with vertical hdr (YS#4148)
6	16-MAR-2016	.	PC8866: update jack pads/slots
7	.	.	PC8851: move vias apart near C24
8	D	V	N
9	D	V	N
10	D	V	N
11	D	V	N
12	D	V	N
13	D	V	N
1	D	V	N
2	D	V	N
3	D	V	N
4	D	V	N
5	D	V	N
6	D	V	N
7	D	V	N
8	D	V	N
9	D	V	N
10	D	V	N
11	D	V	N
12	D	V	N
13	D	V	N

POTENTIOMETERS AND KNOBS

M1523 - POTS LIST

MODEL(S):- PS Preamp

REF	FUNCTION	PART#	KNOB	STYLE
P1	Line Level	4459	8653	P32
P2	Mic Level	4459	8653	P32
P3	Master Level	4459	8653	P32
R	F	P	K	N
R	F	P	K	N
R	F	P	K	N
R	F	P	K	N
R	F	P	K	N
R	F	P	K	N
R	F	P	K	N
R	F	P	K	N
R	F	P	K	N

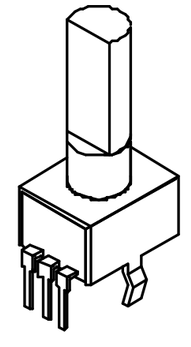

"STYLE_P32"

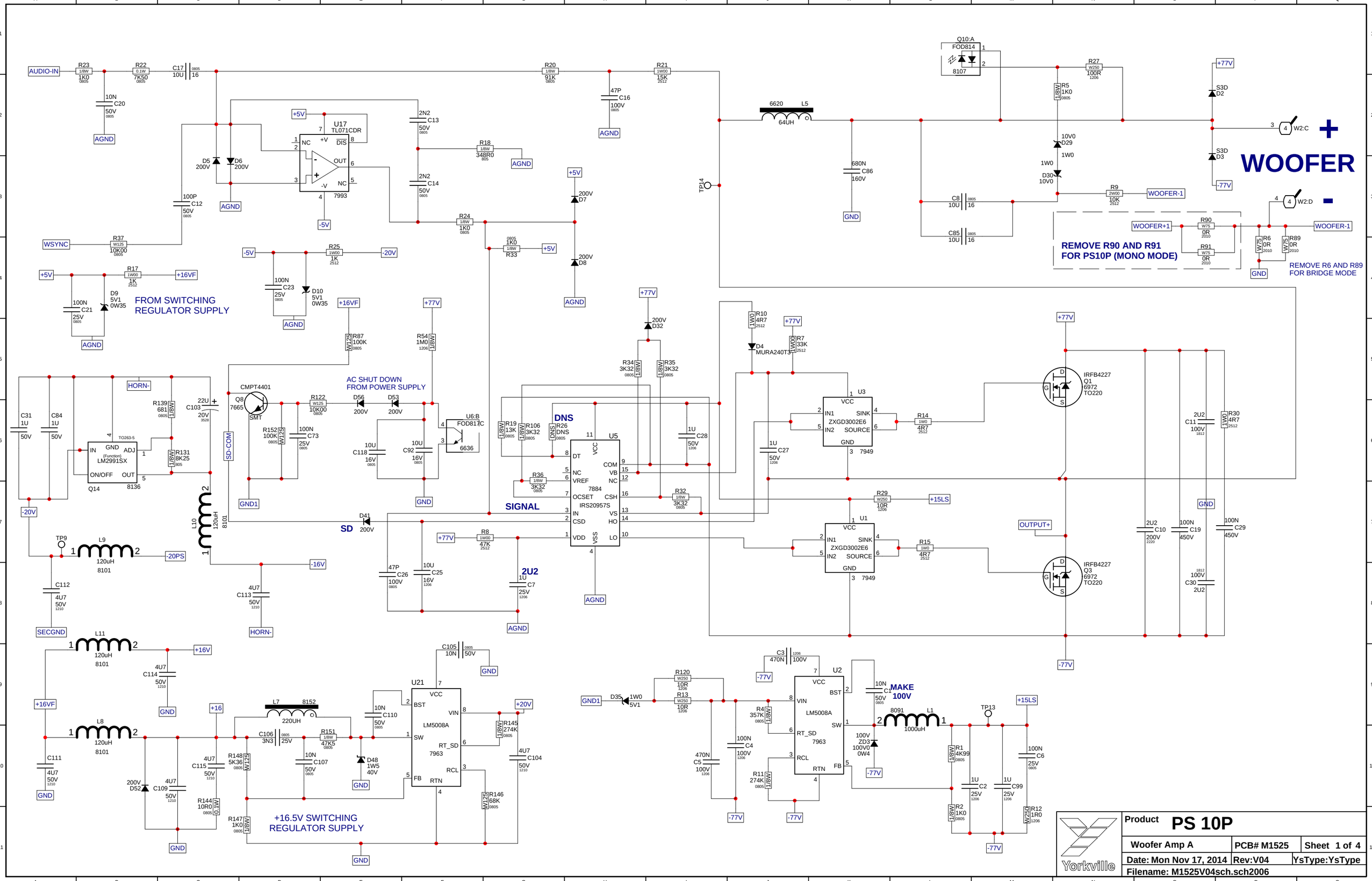

AUDIO-IN
WSYNC
FROM SWITCHING REGULATOR SUPPLY
AC SHUT DOWN FROM POWER SUPPLY
DNS
SIGNAL
SD
+16.5V SWITCHING REGULATOR SUPPLY
MAKE 100V
WOOFER
REMOVE R90 AND R91 FOR PS10P (MONO MODE)
REMOVE R6 AND R89 FOR BRIDGE MODE
Product PS 10P
Woofer Amp A
PCB# M1525
Sheet 1 of 4
Date: Mon Nov 17, 2014
Rev:V04
YsType:YsType
Filename: M1525V04sch.sch2006
Yorkville

FOR MODEL PS10P PARTS INSIDE DASHED LINES ARE UNPLACED

BI AMP WOOFER

GROUND LINK

GND — GND1

SIGNAL

SD

NEG AMP

POS AMP

GROUND LINK

GND — AGND1

Product	PS 10P
Woofer Amp B	PCB# M1525 — Sheet 2 of 4
Date: Mon Nov 17, 2014	Rev:V04 — YsType:YsType
Filename: M1525V04sch.sch2006	

Yorkville

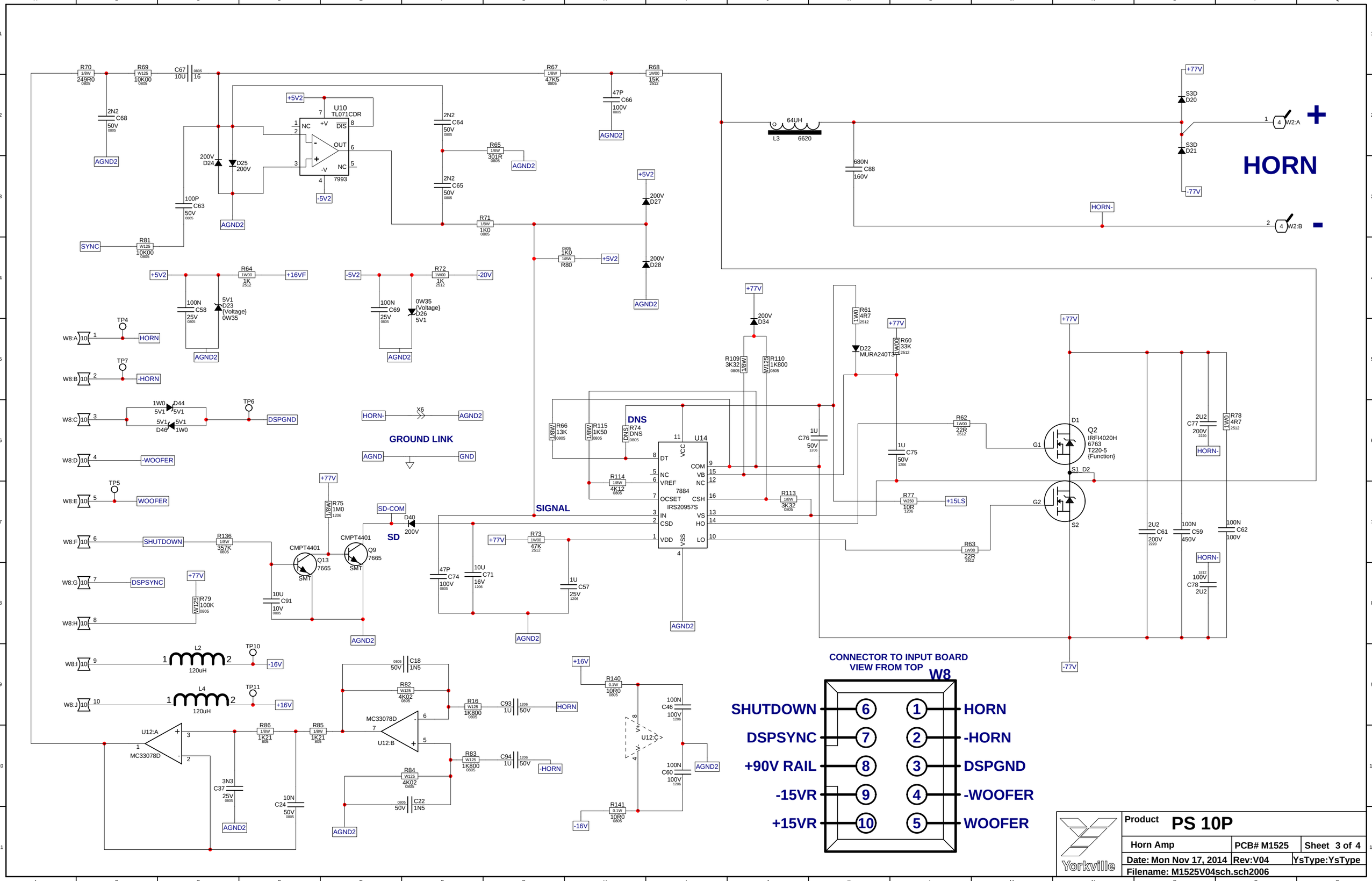
HORN
+
-
W2:A
W2:B
HORN-
+77V
-77V
S3D D20
S3D D21
64UH
L3 6620
680N C88 160V
R70 249R0
R69 10K00
C67 10U 16
2N2 C68 50V
AGND2
U10 TL071CDR
7993
+5V2
-5V2
200V D24
D25 200V
100P C63 50V
SYNC
R81 10K00
2N2 C64 50V
2N2 C65 50V
R65 301R
R67 47K5
R68 15K
47P C66 100V
R71 1K0
R80 1K0
200V D27
200V D28
R64 1K
+16VF
100N C58 25V
5V1 D23 {Voltage} 0W35
R72 1K
-20V
100N C69 25V
0W35 {Voltage} D26 5V1
TP4
W8:A
HORN
TP7
W8:B
-HORN
W8:C
D44 5V1
D46 5V1
TP6
DSPGND
W8:D
-WOOFER
TP5
W8:E
WOOFER
W8:F
SHUTDOWN
R136 357K
W8:G
DSPSYNC
W8:H
R79 100K
W8:I
L2 120uH
TP10
-16V
W8:J
L4 120uH
TP11
+16V
U12:A
MC33078D
R86 1K21
R85 1K21
3N3 C37 25V
10N C24 50V
X6
GROUND LINK
AGND
GND
SD-COM
D40 200V
SD
CMPT4401
Q13 7665
Q9 7665
SMT
R75 1M0
10U C91 10V
R66 13K
R115 1K50
DNS
R74 DNS
U14
7884
IRS20957S
DT
NC
VREF
OCSET
IN
CSD
VDD
VCC
COM
VB
NC
CSH
VS
HO
LO
VSS
R114 4K12
SIGNAL
R73 47K
47P C74 100V
10U C71 16V
1U C57 25V
R109 3K32
R110 1K800
200V D34
R61 4R7
D22 MURA240T3
R60 33K
1U C76 50V
1U C75 50V
R62 22R
R77 10R
+15LS
R113 3K32
R63 22R
D1
Q2 IRFI4020H 6763 T220-5 {Function}
G1
G2
S1 D2
S2
2U2 C77 200V
R78 4R7
2U2 C61 200V
100N C59 450V
100N C62 100V
100V C78 2U2
R140 10R0
R141 10R0
100N C46 100V
100N C60 100V
U12:C
R16 1K800
C93 1U 50V
R82 4K02
C18 1N5
R83 1K800
C94 1U 50V
R84 4K02
C22 1N5
CONNECTOR TO INPUT BOARD
VIEW FROM TOP
W8
SHUTDOWN 6
DSPSYNC 7
+90V RAIL 8
-15VR 9
+15VR 10
1 HORN
2 -HORN
3 DSPGND
4 -WOOFER
5 WOOFER
Yorkville
Product PS 10P
Horn Amp
PCB# M1525
Sheet 3 of 4
Date: Mon Nov 17, 2014
Rev:V04
YsType:YsType
Filename: M1525V04sch.sch2006

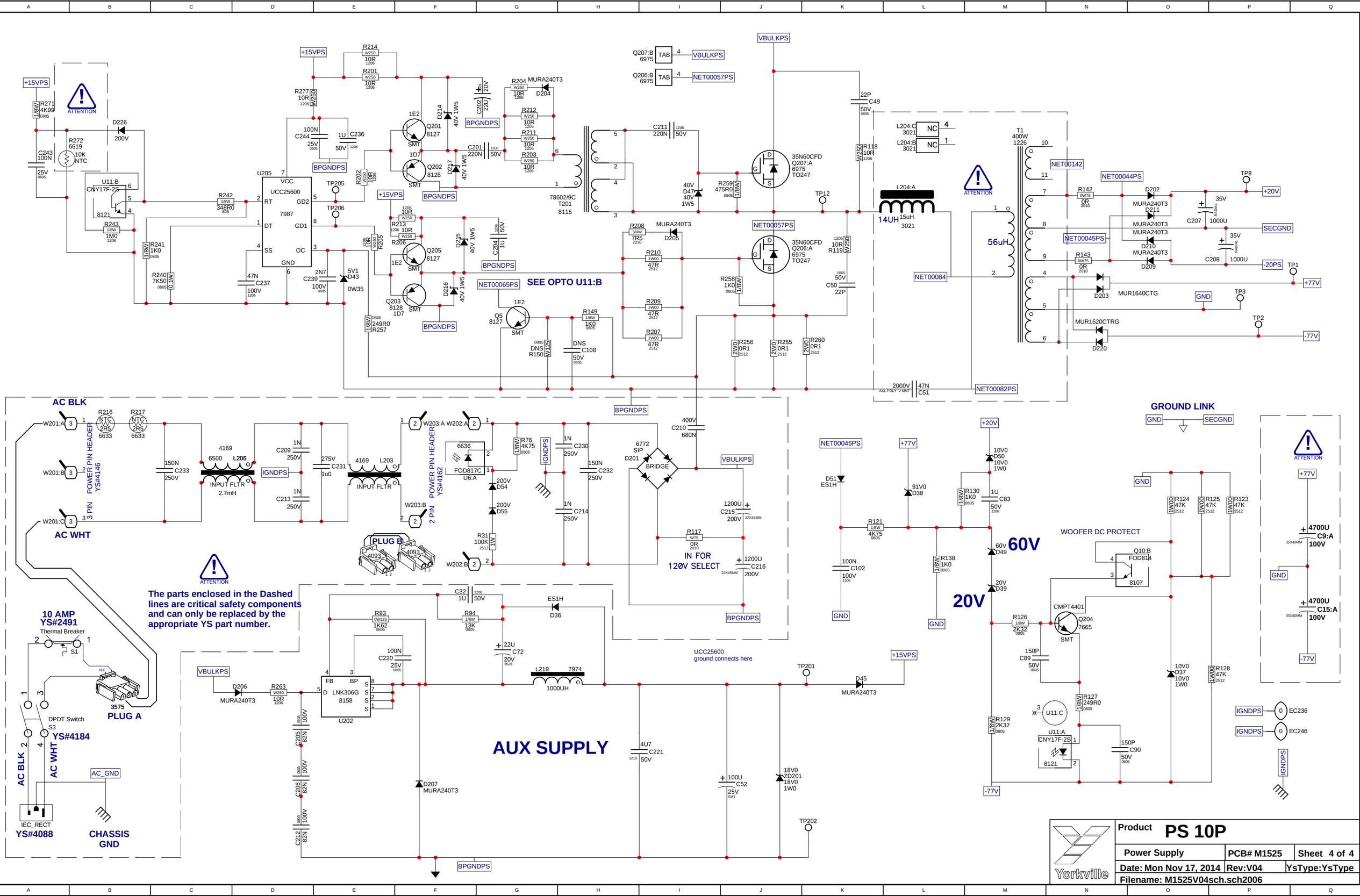

Product	PS 10P	
Power Supply	PCB# M1525	Sheet 4 of 4
Date: Mon Nov 17, 2014	Rev:V04	YsType:YsType
Filename: M1525V04sch.sch2006		

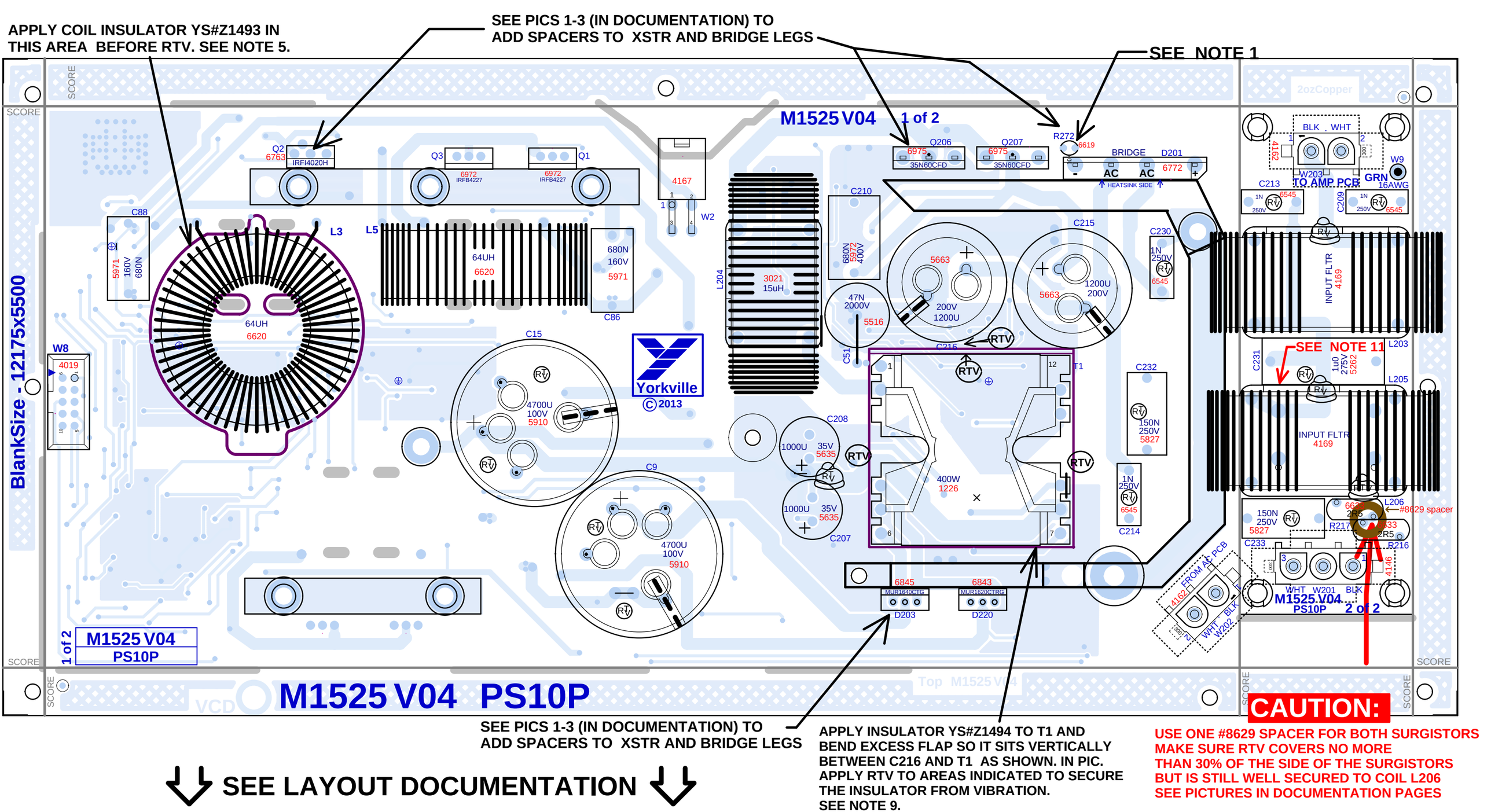
APPLY COIL INSULATOR YS#Z1493 IN THIS AREA BEFORE RTV. SEE NOTE 5.
SEE PICS 1-3 (IN DOCUMENTATION) TO ADD SPACERS TO XSTR AND BRIDGE LEGS
SEE NOTE 1
M1525 V04 1 of 2
BlankSize - 12175x5500
SCORE
2ozCopper
Q2 6763 IRFI4020H
Q3 6972 IRFB4227
Q1 6972 IRFB4227
4167
W2
C88 5971 160V 680N
L3 64UH 6620
L5 64UH 6620
680N 160V 5971
C86
L204 3021 15uH
C210 680N 5972 400V
Q206 6975 35N60CFD
Q207 6975 35N60CFD
R272 6619
BRIDGE D201 6772
HEATSINK SIDE
BLK WHT 4162
W203 TO AMP PCB
GRN 16AWG
W9
C213 1N 250V RTV 6545
C209 1N 250V RTV 6545
C215 5663 200V 1200U
5663 1200U 200V
C230 1N 250V RTV 6545
INPUT FLTR 4169
47N 2000V 5516
C51
C216 RTV
T1
C232 RTV 150N 250V 5827
SEE NOTE 11
C231 1u0 275V 5262
L203
L205
INPUT FLTR 4169
W8 4019
C15 4700U 100V 5910
Yorkville ©2013
C208 1000U 35V 5635
1000U 35V 5635
C207
400W 1226
C9 4700U 100V 5910
1N 250V RTV 6545
C214
150N 250V RTV 5827
C233
L206
#8629 spacer
R217 2R5
R216 2R5
FROM AC PCB 4162
WHT W202 BLK
WHT W201 BLK
4146
M1525 V04 PS10P 2 of 2
6845 MUR1640CTG D203
6843 MUR1620CTRG D220
1 of 2 M1525 V04 PS10P
M1525 V04 PS10P
SEE PICS 1-3 (IN DOCUMENTATION) TO ADD SPACERS TO XSTR AND BRIDGE LEGS
APPLY INSULATOR YS#Z1494 TO T1 AND BEND EXCESS FLAP SO IT SITS VERTICALLY BETWEEN C216 AND T1 AS SHOWN. IN PIC. APPLY RTV TO AREAS INDICATED TO SECURE THE INSULATOR FROM VIBRATION. SEE NOTE 9.
SEE LAYOUT DOCUMENTATION
CAUTION:
USE ONE #8629 SPACER FOR BOTH SURGISTORS
MAKE SURE RTV COVERS NO MORE THAN 30% OF THE SIDE OF THE SURGISTORS BUT IS STILL WELL SECURED TO COIL L206
SEE PICTURES IN DOCUMENTATION PAGES

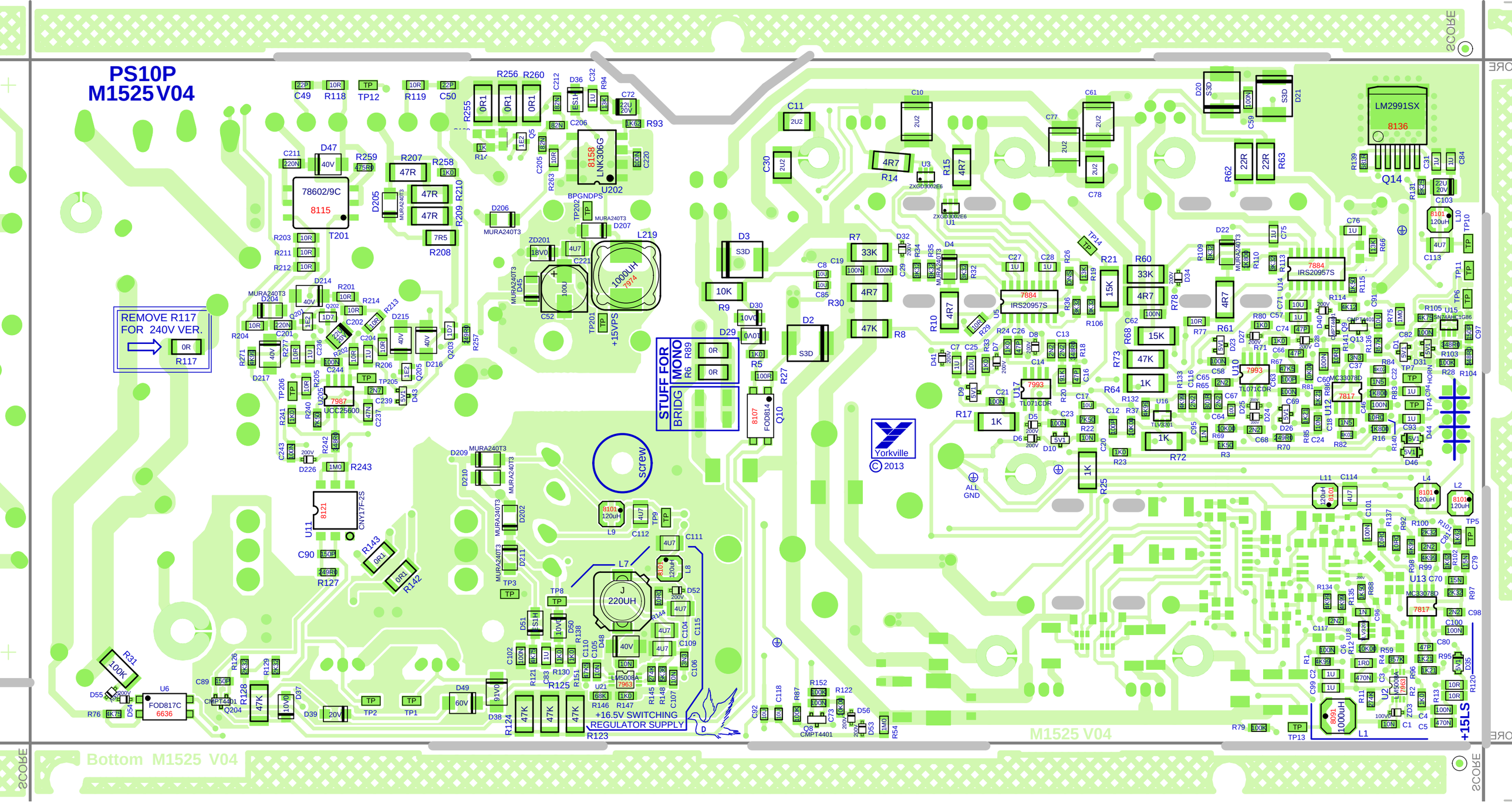

M1525 V04 BOTTOM VIEW

SEE LAYOUT DOCUMENTATION

SEE LAYOUT DIAGRAM

M1525 V04 PS10P PRODUCTION NOTES

1. IMPORTANT: PIZZA CUTTER MUST BE USED TO SEPARATE THE PCB FROM THE PANEL.
2. USE SMALL NYLON CABLE TIE YS# 3810 TO SECURE L3 AND L5 TO THE PCB.

3. THERMISTOR R272 (YS# 6619) IS HAND INSERTED.
4. DO NOT STUFF COMPONENTS MARKED WITH DNS. IN THE LAYOUT PADS WITH NO COMPONENT OUTLINE OR REF DESIGNATOR ARE ALSO NOT STUFFED.
. RTV BETWEEN AND AROUND ALL TALL CAPS, COILS, AND COMPONENTS.
5. ADD THE REQUIRED NUMBER OF SPACERS #8607 AND #3502 TO THE LEGS OF TRANSISTORS AS INDICATED IN PICTURES 1 - 3.
6. PEEL BACK OFF AND APPLY YS# Z1493 INSULATOR FOR COIL L3 IN LOCATION INDICATED. THIS IS DONE AFTER WAVE BEFORE RTV
7. RTV UNDER COILS L3 AND L5 (YS#6620) BEFORE SECURING WITH TIE WRAPS. THEN RTV AROUND THE SIDES. SEE CAUTION NOTE IN LAYOUT AND DOCUMENTATION PICTURES FOR SECURING R216 TO L206 WITH RTV
8. NOTE THAT THIS BOARD USES A WAVE SHIELD THAT REQUIRES THE SOLDER WAVE BE SET TO THE PROPER HEIGHT AND SPEED.
9. AFTER WAVE AND PCB FINISHING, PLEASE PLACE BOARD ON RACK SMT COMPS SIDE UP FOR TRANSPORT TO WIRING DEPARTMENT.
10. BEFORE INSERTING T1 INTO PCB, APPLY INSULATOR YS#1494 TO XFMR BY ALIGNING HOLES IN INSULATOR WITH THE PINS ON T1 XFMR. USE RTV (WHERE INDICATED) TO FASTEN IT DOWN AFTER PLACING T1 WITH INSULATOR INTO PCB.
11. PLACE L205 SO HIGH SIDE OF PLASTIC CARRIER IS AWAY FROM R217. SEE PICTURE

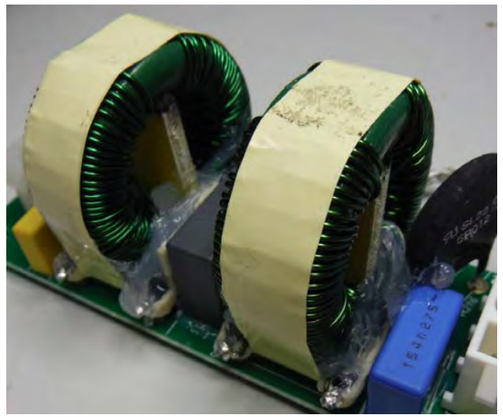

APPLY RTV ALL AROUND THE BASE OF THE COILS L203 AND L205 AS SHOWN



APPLY RTV I NSIDE AND ALL AROUND THE COIL

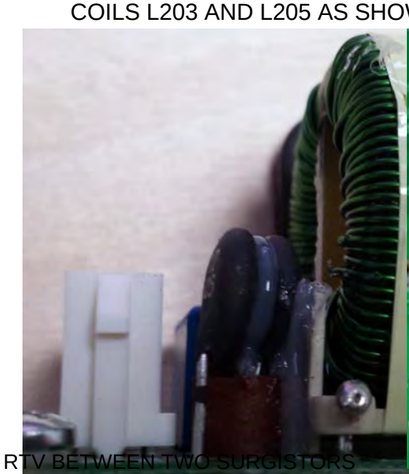

APPLY RTV BETWEEN TWO SURGISTORS AND BETWEEN SURGISTOR AND COIL



YS#1494 INSULATOR. SEE NOTE 9.

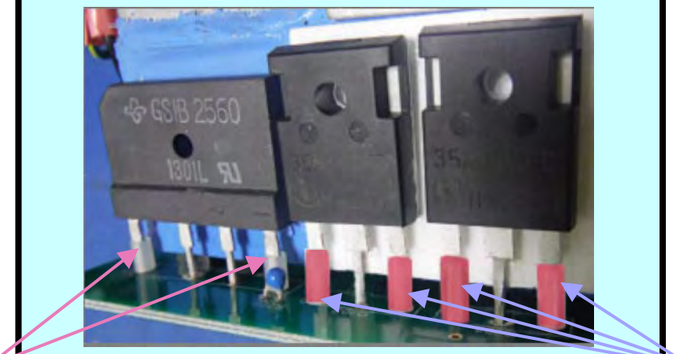

ADD SPACER #9067 TO THE INDICATED LEGS OF D201, Q206 AND Q207

PIC. 2

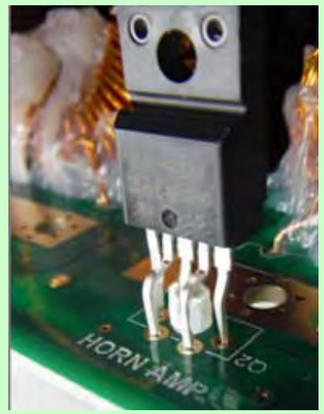

ADD 1 SPACER YS# 8607 TO MIDDLE REAR LEG OF Q2 AS SHOWN

ADD 1 #9067 SPACER TO THE MIDDLE LEG OF Q1, Q3, Q6, Q7 D203 AND D220

PIC. 3

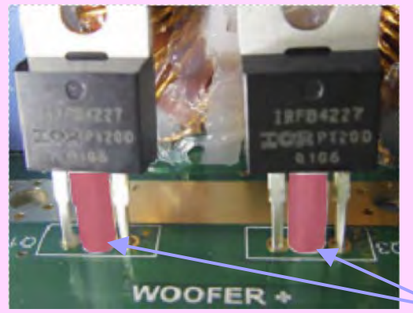

9067 (1)

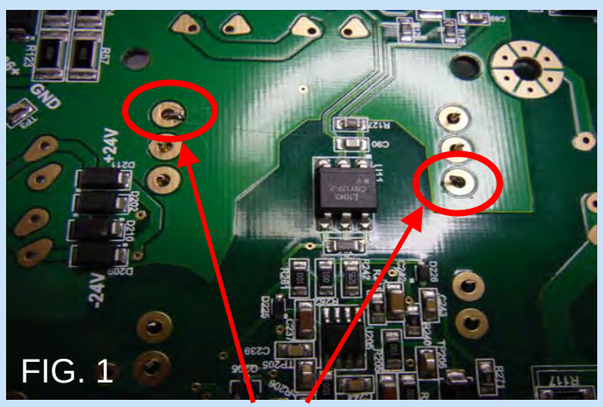

Bend these 2 leads on back of board after inserting T1 (YS# 1226)

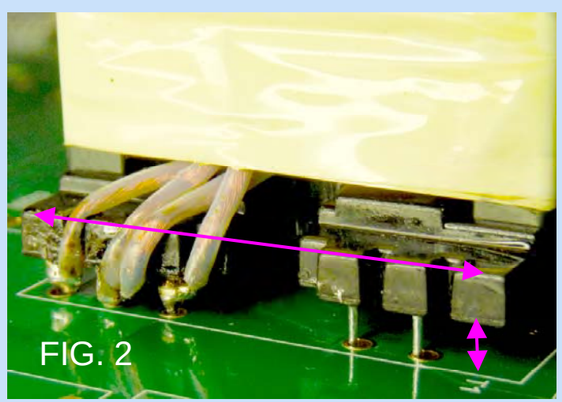

Bending the 2 leads indicated in Fig 1 should level the XFMR T1 as shown in Fig 2 above

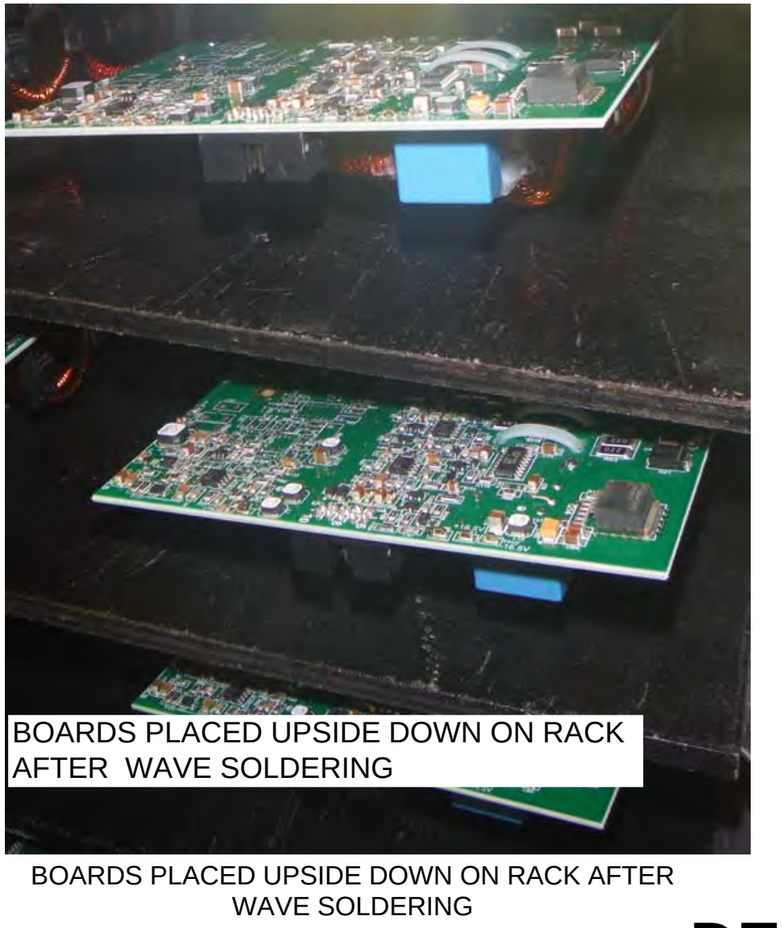

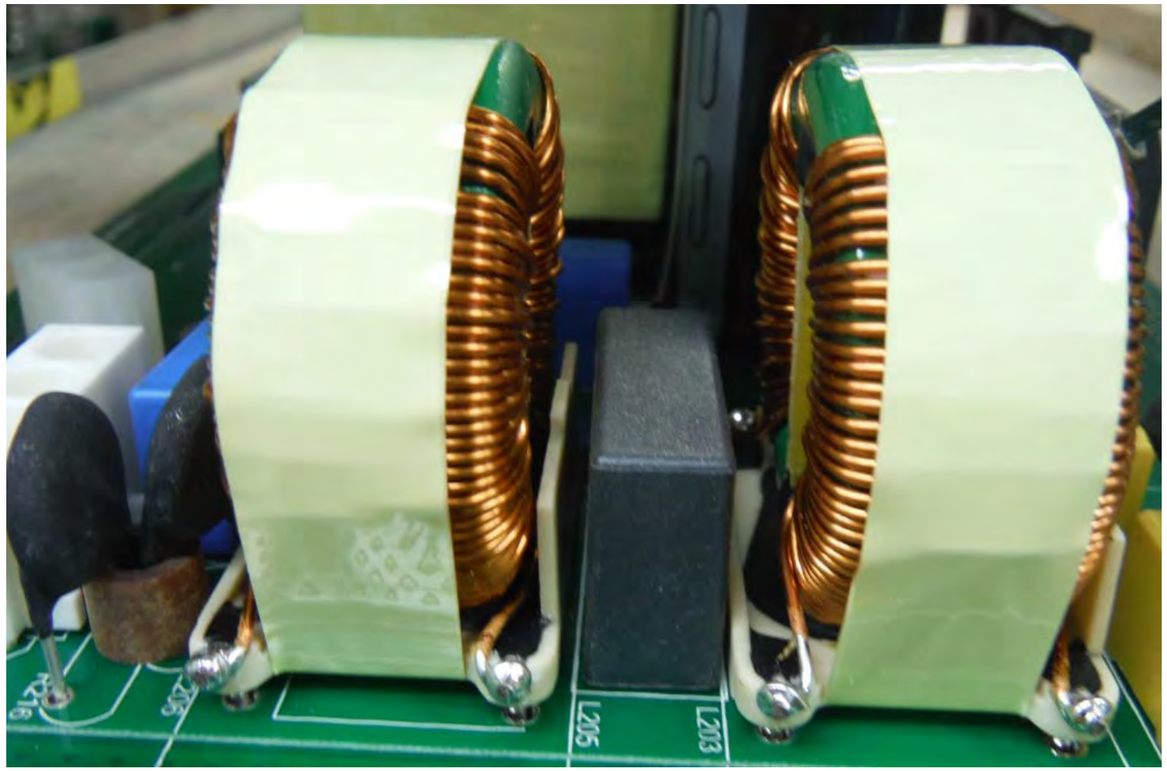

PICTURE FOR NOTE 11.

DESIGN HISTORY AND XSTR PINOUT INFORMATION

XSTR PIN-OUT

35N60CFD

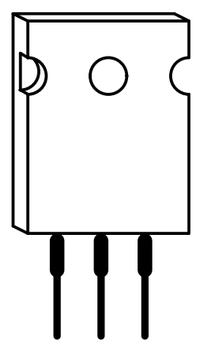

TO-247AC

IRFB4227

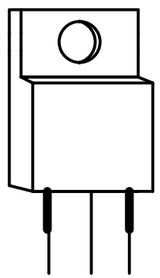

TO-220

M1525 PCB HISTORY

MODEL(S):- PS10P

#	DATE	VER#	DESCRIPTION OF CHANGE
1	10 SEP 2013	V01	RELEASED FOR PRODUCTION
2	22 NOV 2013	V02	ADDED ROUTES FOR BOARD SEPARATION
3	.	.	STRAIN RELIEF OF CERAMIC CAPS
4	06 JAN 2014	V03	PC#8620 - CHANGE L219 FROM YS#8001 TO YS#7974
5	.	.	CHANGE C29 FROM YS#7875 TO YS#8092
6	06 JUN 2014	V04	PC8634: Replace #6634 surgistor with
7	.	.	2 #6633 surgistors. Revised per QPS report.
8	.	.	PC8641:Replace C70, C79 to #7798. GG
9	19 AUG 2014	.	PC8687: REPLACE R145 357K (YS#7639) WITH 274K (YS#7686)
10	13-NOV-2014	.	ADDED NOTE 10 FOR PLACEMENT OF L205
11			
12			
13			

AUX SUPPLY

VBULKPS
D206 MURA240T3 403D
R263 10R 1206
U202 LNK306G 8158 SMD8B
C220 100N 50V 0805
R94 12K1 0603
R93 1K62 0805
D36 ES1H DO-214AC
C72 10U 16V 1206
L219 7974 1000UH
+14V
+15VPS
R158 0R0 0805
C125 400V 22N RAD POLY
D207 MURA240T3 403D
AUXGND
C221 4U7 50V 1210
R157 3K32 100U 25V 0805
C49 ELE 8mm
ZD201 18V DO-214AC
R277 10R 1206
C244 10U 16V 1206
C204 1U 50V 1206
C236 1U 50V 1206
U205 UCC25600 7987 SO8
VCC RT DT SS GD2 GD1 OC GND
R271 4K99 0805
D62 D1005 CDSF4148
OPTO-COUPLER
U11:2 CNY17F-2S 8121
R272 9619 10K
C243 100N 50V 0805
R242 475R0 0805
R241 1K37 0805
R288 27K4 0805
R159 1K21 0805
MMBT5401 Q5 7837 SOT-23
SS
C237 220N 50V 1206
R240 17K8 0805
C239 10N 50V 0805
D43 5V1 SOT-23
R189 348R0 0805
R282 348R0 0805
U20 MIC4424 6652 SO8
NC INA VS OUTA NC INB GND OUTB
C108 4U7 50V 1210
R190 1K62 0805
R191 1K62 0805
C84 10P 1000V 1206

T2 XF3955
D47 SOD323F 30V
D57 SOD323F 30V
C123 4U7 50V 1210
D60 SOT-23 15V0
C114 1N 50V 0805
R52 47R5 0805
R155 1K0 0805
C111 100P 0805
U19 MIC4424 6652 SO8
R153 499R 0805
R194 100K 1206
R195 100K 1206
R5310R 1210
R57 10R 1210
R207 10K00 0805
Q207 SPW35N60CFD 6975 TO247
VBULKPS
HB_OUT

T3 XF3955
D58 SOD323F 30V
D59 SOD323F 30V
C124 4U7 50V 1210
D61 SOT-23 15V0
C116 1N 50V 0805
R74 47R5 0805
R156 1K0 0805
C113 100P 0805
U22 MIC4424 6652 SO8
R154 499R 0805
R192 100K 1206
R193 100K 1206
R149 10R 1210
R150 10R 1210
R211 10K00 0805
Q206 SPW35N60CFD 6975 TO247
X9
BPGNDPS

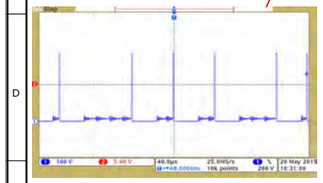

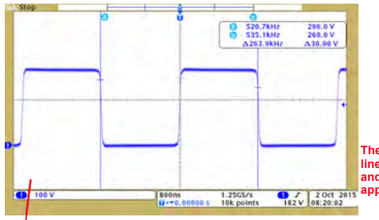

The parts enclosed in the Dashed lines are critical safety components and can only be replaced by the appropriate YS part number.

L204 25UH 3109
43uH T1 1249
A
Hand
D203 MUR1640CTG 400V
D220 MUR1620CTRG 200V
+86.3V
+77V
C120 22X35MM 1500U 100V
C121 22X35MM 1500U 100V
C96 1812 2U2 100V
C97 1812 2U2 100V
GND
-77V
-86.3V
BPGNDPS
C51 Axial 2000V 47N

AC BLK
W201:1
W201:2
W201:3
AC WHT
R284 47K 2512
R285 47K 2512
C233 275V 1u0 RAD 'X2'
L9 3.3mH 6507
C209 250V 1N
C213 250V 1N
IGNDPS
C231 1u0 275V RAD 'X2'
L10 3.3mH 6507
U6:1 4PIN OPTO-COUPLER 8107 FOD814
R31 10K0 0805
R177 100K 1206
R176 100K 1206
C230 250V 1N MF 10MM
C214 250V 1N MF 10MM
C232 250V 150N 'X2' 15MM
R216 NTC 6622 10R
K1:1 RELAY 1C 3105
D201 6772 BRIDGE SIP 400V
TP9
VBULKPS
+340V
R265 100K 1206
R266 100K 1206
C215 25X40MM 330U 400V
C216 25X40MM 330U 400V
R292 100K 1206
R293 100K 1206
C210 400V 680N RAD POLY
C32 400V 22N RAD POLY
R118 1W60 2R0 1812
TP11
BPGNDPS

A

10 AMP
YS#2491
Thermal Breaker
S1
N.C.
3575
PLUG A
DPDT Switch
S3
YS#4184
AC BLK
AC WHT
CHASSIS GND
IEC_RECT
YS#4088

SS
R152 100R 0805
TP12
+15VPS
U6:2 4PIN OPTO-COUPLER 8107 FOD814
R205 1K0 0805
R202 100K0 0805
R210 68K 0805
U25:2 7661 LM393D SO8
R201 40K2 0805
CDSF4148
D50
K1:2
D46 5V1 SOT-23
R204 10K0 0805
R208 47R5 0805
RELAY 1C 3105
MMBT4401 Q35 7665 SOT-23
C93 1U 50V 1206
C92 22U 16V Elec
R209 20K5 0805
R203 182K 0805
R206 20K5 0805
7661 LM393D U25:1
R212 40K2 0805
Q8 MMBT4401 SOT-23 7665
U25:3 LM393D 7661 SO8
V+ V-
C144 1U 50V 1206
X12
TP13
AUXGND

X2
AUXGND
BPGNDPS
X7
AUXGND
BPGNDPS

R248 681R 0805
D54 SOD-323 200V
R249 1M0 0805
C141 1812 2U2 100V
R250 150K0 0805
NOAC
GND

WOOFER DC PROTECT
Q10:2 FOD814 4PIN OPTO-COUPLER 8107
R121 47K5 0805
R123 47K5 0805
R130 47K5 0805
R129 2K32 0805
CNY17F-2S OPTO-COUPLER U11:1 8121
R126 2K32 0805
C89 50V 150P 0805
C83 100N 1206 100V
R138 1K0 0805
Q4 TL431A 7720 SOT23 2V5
R127 1K0 0805
R128 1K0 0805
D37 10V0 DO-214AC
R124 10K 0805
R125 10K 0805
R217 10K 0805
R283 10K 0805
TP10
GND
R26 68R1 0805

Yorkville	Product SW PS		
	POWER SUPPLY.SCHDOC	PCB# M1528	Sheet 1 of 6
	Date: 2018-01-12	Rev:V01P0	YsType:YsType
	Filename: POWER SUPPLY.SCHDOC		

STUFF R6 AND R89
FOR MONO MODE

FROM SWITCHING
REGULATOR SUPPLY

Yorkville	Product	PS 12P/15P	
	Sheet1.SCHDOC	PCB# M1528	Sheet 2 of 6
	Date: 2018-01-12	Rev:V01P0	YsType:YsType
	Filename: Sheet1.SCHDOC		

BI AMP WOOFER

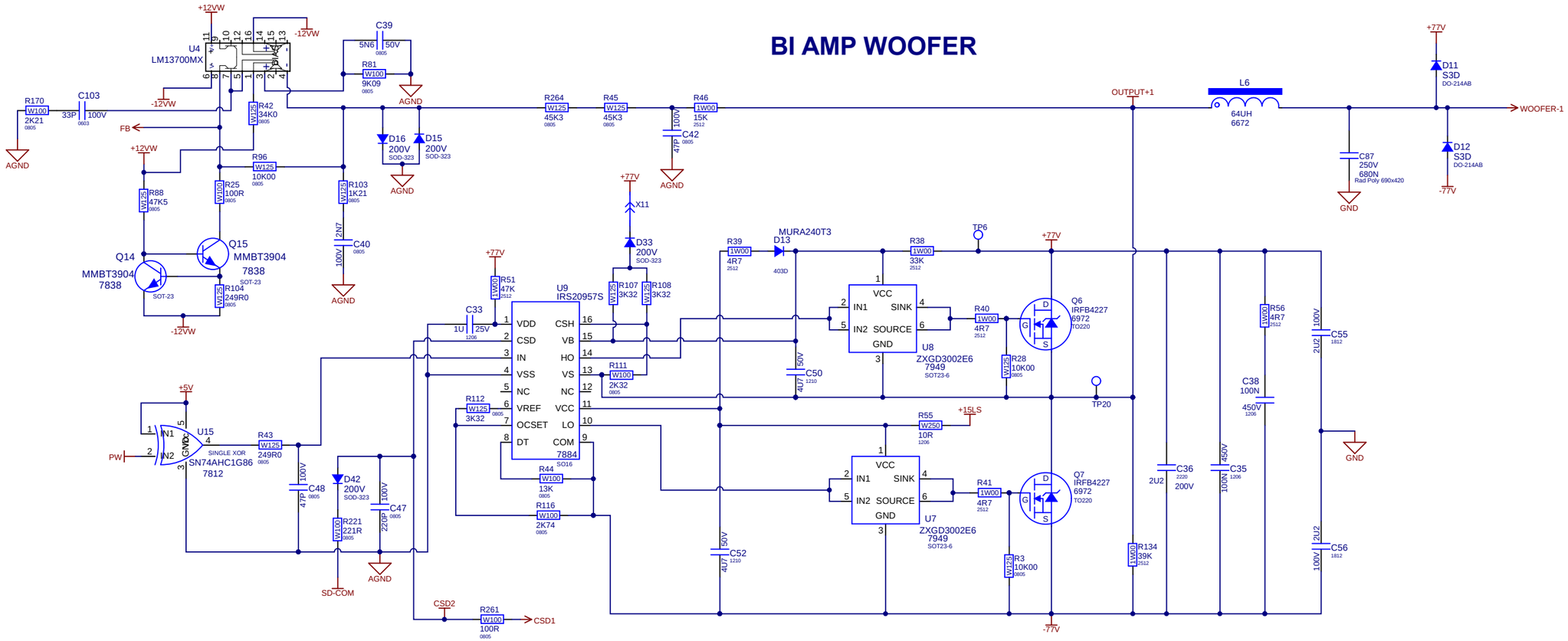

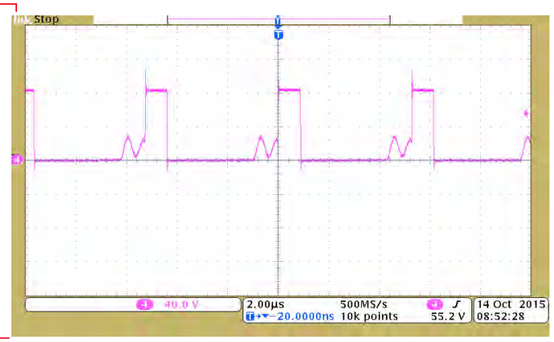

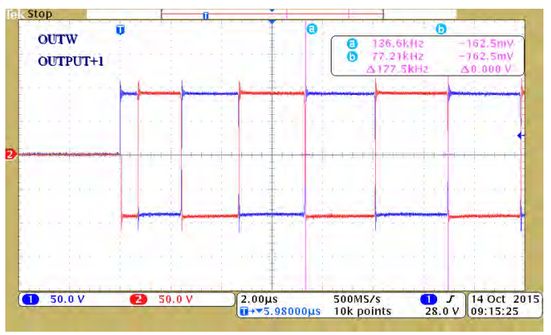

Yorkville	Product	PS 12P/15P	
	SheeT2.SCHDOC	PCB# M1528	Sheet 3 of 6
	Date: 2018-01-12	Rev:V01P0	YsType:YsType
	Filename: SheeT2.SCHDOC		

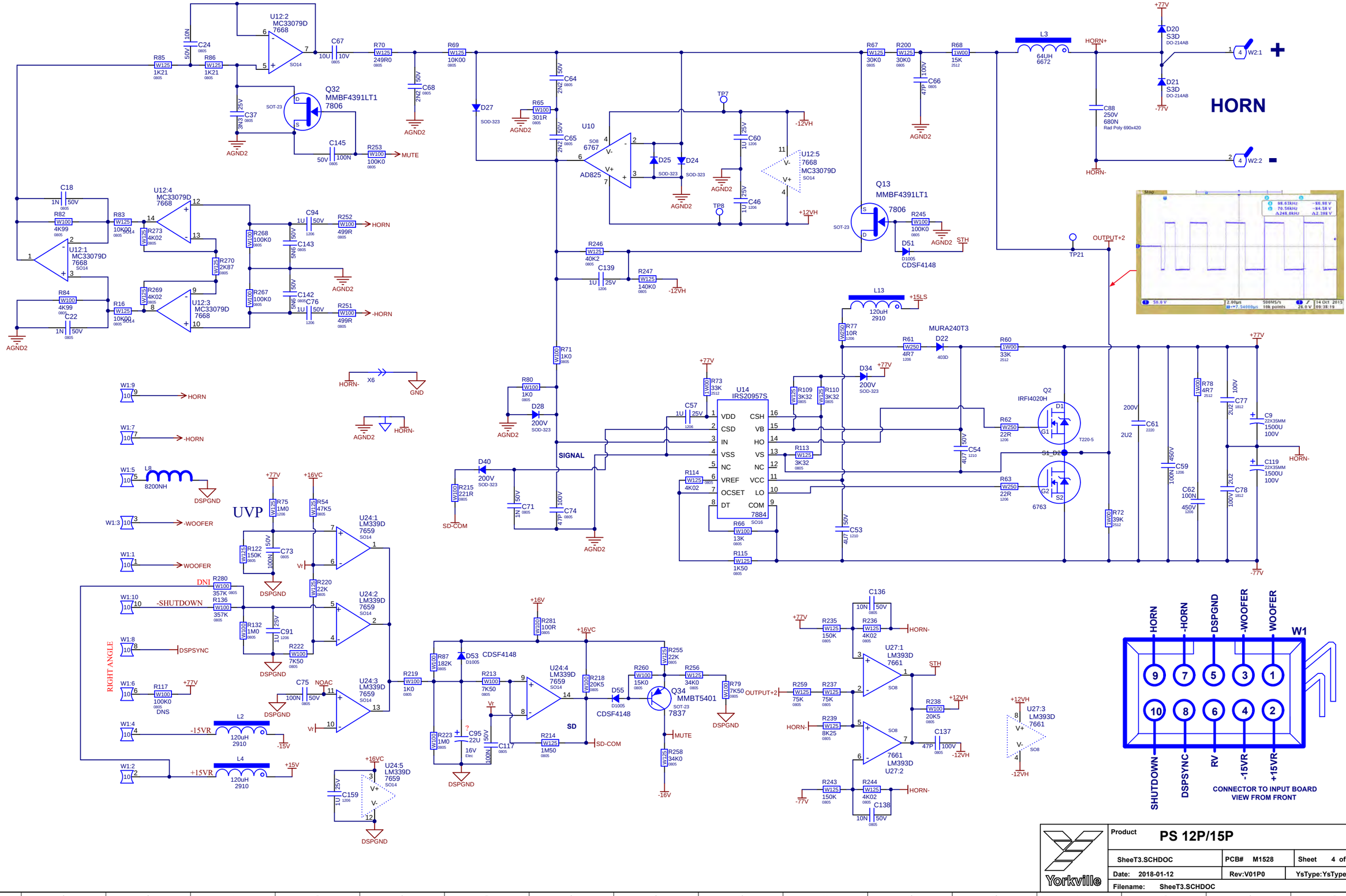
U12:2 MC33079D 7668
C24 10N 50V
C67 10U 10V
R70 W125 249R0
R69 W125 10K00
C68 2N2
R85 W125 1K21
R86 W125 1K21
C37 3N3 25V
Q32 MMBF4391LT1 7806
C145 100N 50V
R253 W100 100K0
MUTE
AGND2
C18 1N 50V
R82 W100 4K99
R83 W125 10K00
U12:4 MC33079D 7668
R273 W250 4K02
R268 W100 100K0
C94 1U 50V
R252 W100 499R
HORN
U12:1 MC33079D 7668
R270 W250 2K87
C143 5N6 50V
R84 W100 4K99
R16 W125 10K00
R269 W250 4K02
U12:3 MC33079D 7668
R267 W100 100K0
C142 5N6 50V
C76 1U 50V
R251 W100 499R
-HORN
C22 1N 50V
W1:9 10 9 HORN
W1:7 10 7 -HORN
HORN- X6 GND
AGND2 HORN-
W1:5 10 5 L8 8200NH DSPGND
W1:3 10 3 -WOOFER
W1:1 10 1 WOOFER
UVP
R75 W250 1M0
R54 W250 47K5
U24:1 LM339D 7659
R122 W250 150K
C73 100N 50V
R220 W250 22K
U24:2 LM339D 7659
DNI
R280 W100 357K
W1:10 10 -SHUTDOWN
R136 W100 357K
R132 W100 1M0
C91 1U 25V
R222 W100 7K50
W1:8 10 8 DSPSYNC
RIGHT ANGLE
W1:6 10 6 R117 W100 100K0 DNS
+77V
C75 100N 50V NOAC
U24:3 LM339D 7659
W1:4 10 4 -15VR L2 120uH 2910 -15V
W1:2 10 2 +15VR L4 120uH 2910 +15V
+16VC
U24:5 LM339D 7659
C159 1U 25V
DSPGND
+16V
R281 W100 100R
R87 W100 182K
D53 CDSF4148 D1005
R213 W100 7K50
U24:4 LM339D 7659
R218 W100 20K5
D55 CDSF4148 D1005
R223 W100 1M0
C95 22U 16V Elec
C117 100N 50V
R214 W125 1M50
SD
SD-COM
R219 W100 1K0
R260 W100 15K0
R255 W125 22K
R256 W125 34K0
Q34 MMBT5401 SOT-23 7837
R79 W100 7K50
MUTE
R258 W125 34K0
-16V
OUTPUT+2
D27 SOD-323
R65 W100 301R
C64 2N2 50V
C65 2N2 50V
U10 AD825 SO8 6767
D25 D24 SOD-323
TP7 TP8
C60 1U 25V
C46 1U 25V
-12VH +12VH
U12:5 MC33079D 7668 SO14
R246 W125 40K2
C139 1U 25V
R247 W125 140K0
-12VH
R67 W125 30K0
R200 W125 30K0
R68 1W00 15K 2512
C66 47P 100V
Q13 MMBF4391LT1 7806
R245 W100 100K0
D51 D1005 CDSF4148
STH
L3 64UH 6672
HORN+
HORN-
C88 250V 680N Rad Poly 690x420
D20 S3D DO-214AB
D21 S3D DO-214AB
+77V -77V
W2:1 W2:2
HORN
TP21 OUTPUT+2
L13 120uH 2910 +15LS
R71 W100 1K0
R80 W100 1K0
D28 200V SOD-323
D34 200V SOD-323
MURA240T3
R77 W250 10R 1206
R61 W250 4R7 1206
D22 403D
R60 1W00 33K 2512
U14 IRS20957S
R73 1W00 33K 2512
C57 1U 25V
R109 W125 3K32
R110 W125 3K32
R113 W125 3K32
R114 W125 4K02
R115 W125 1K50
R66 W100 13K
C53 4U7 50V
C54 4U7 50V
Q2 IRFI4020H T220-5
R62 W250 22R 1206
R63 W250 22R 1206
6763
S1_D2
R72 1W00 39K 2512
C61 2220 200V 2U2
C59 2220 450V 100N
C62 1206 100N 450V
R78 1W00 4R7 2512
C77 1812 100V 2U2
C78 1812 100V 2U2
C9 22X35MM 1500U 100V
C119 22X35MM 1500U 100V
HORN-
-77V
R215 W100 221R
D40 200V SOD-323
C71 1N 50V
C74 47P 100V
SD-COM
AGND2
R235 W125 150K
C136 10N 50V
U27:1 LM393D 7661
R236 W125 4K02
R237 W125 75K
R259 W125 75K
R239 W125 8K25
R238 W100 20K5
C137 47P 100V
-12VH
U27:3 LM393D 7661
U27:2 7661 LM393D
R243 W125 150K
R244 W125 4K02
C138 10N 50V
W1 9 7 5 3 1 10 8 6 4 2
HORN -HORN DSPGND -WOOFER WOOFER
SHUTDOWN DSPSYNC RV -15VR +15VR
CONNECTOR TO INPUT BOARD
VIEW FROM FRONT
Product PS 12P/15P
SheeT3.SCHDOC
PCB# M1528
Sheet 4 of 6
Date: 2018-01-12
Rev:V01P0
YsType:YsType
Filename: SheeT3.SCHDOC
Yorkville

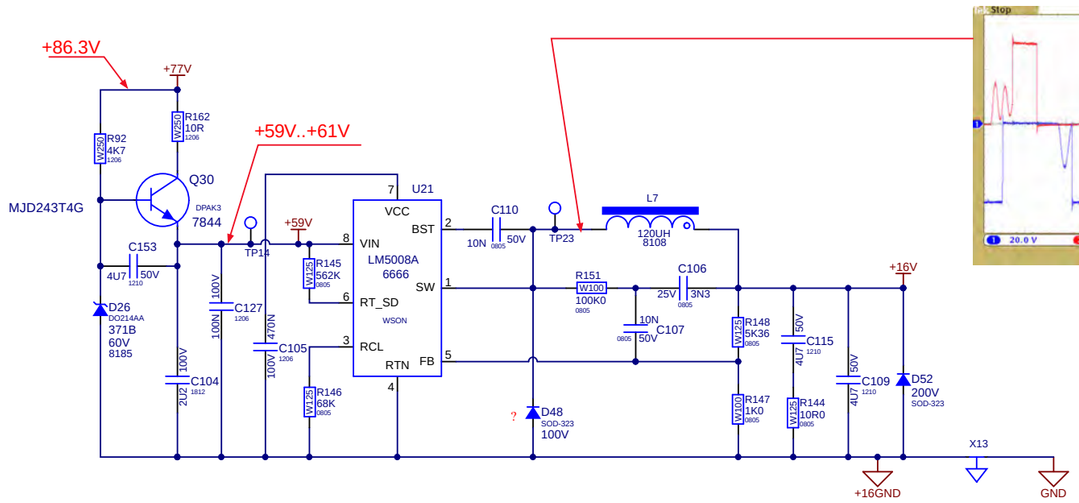

Section:	LV Pwr Supply				
Product(s):	PS12PCE-PS15PCE				
PCB#: M1527	Rev#: V03	EML Rev#: XX	Sheet 5 Of 6		
Modified: 2018-01-12	File: LV-PS.SchDoc		Tmp Rev: TemplateRev		

DESIGN HISTORY AND INFORMATION

CHANGE HISTORY

#	DATE	VER#	PC#	DESCRIPTION OF CHANGE
1	02-JUN-2016	V01	.	RELEASED FOR PRODUCTION
2	26-JUL-2016	.	8885	UPDATED SYMBOL FOR IRS20957S
3	16-SEP-2016	.	8965	ADDED PRE-ASSEMBLY PAGE FOR ADDITIONAL PROCESS NOTES
4	03-FEB-2017	V02	.	ADD VIAS TO REINFORCE HIGH CURRENT CONNECTED COMPONENTS
5			.	CHANGE THICKNESS OF BOARD TO 2MM
6	20-JUN-2017	V02	.	RELEASED FOR PRODUCTION
7		.	.	
8	.	.	.	.
9	.	.	.	.
10	.	.	.	.
11	.	.	.	.
12	.	.	.	.
13		.	.	.

#	DATE	VER#	PC#	DESCRIPTION OF CHANGE
1	.	.	.	.
2	.	.	.	.
3	.	.	.	.
4	.	.	.	.
5	.	.	.	.
6	.	.	.	.
7	.	.	.	.
8	.	.	.	.
9	.	.	.	.
10	.	.	.	.
11	.	.	.	.
12	.	.	.	.
13	.	.	.	.

#	DATE	VER#	PC#	DESCRIPTION OF CHANGE
1	.	.	.	.
2	.	.	.	.
3	.	.	.	.
4	.	.	.	.
5	.	.	.	.
6	.	.	.	.
7	.	.	.	.
8	.	.	.	.
9	.	.	.	.
10	.	.	.	.
11	.	.	.	.
12	.	.	.	.
13	.	.	.	.

POTENTIOMETERS AND KNOBS

POTENTIOMETERS AND KNOBS			
REF	FUNCTION	POT#	KNOB#
.	.	.	.
.	.	.	.
.	.	.	.
.	.	.	.
.	.	.	.
.	.	.	.
.	.	.	.
.	.	.	.
.	.	.	.
.	.	.	.
.	.	.	.
.	.	.	.
.	.	.	.
.	.	.	.

PINOUT DIAGRAMS

THIS SHEET CONTAINS A CHANGE HISTORY LOG, A LIST OF THE POTS & KNOBS AND A LEADS & PINS REFERENCE SECTION.

Yorkville

Section: Design Information And History
Product(s): PS12PCE-PS15PCE
PCB#: M1527 | Rev#: V03 | EML Rev#: XX | Sheet 6 Of 6
Modified: 2018-01-12 | File: History.SchDoc | Tmp Rev: TemplateRev

PCB PRE-ASSEMBLY DOCUMENTATION

USE THESE NOTES TO ASSEMBLE OR PREPARE PARTS
BEFORE INSERTING INTO PCB AND ALSO PRIOR TO WAVE

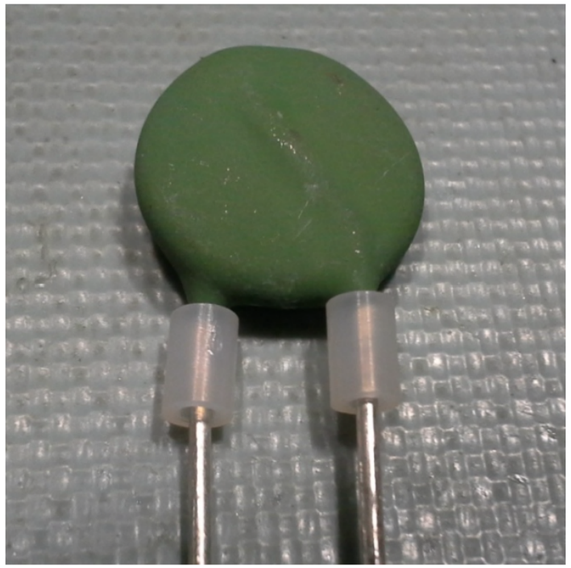

FOR YS PN 6622 USE NYLON SPACER PN 8607

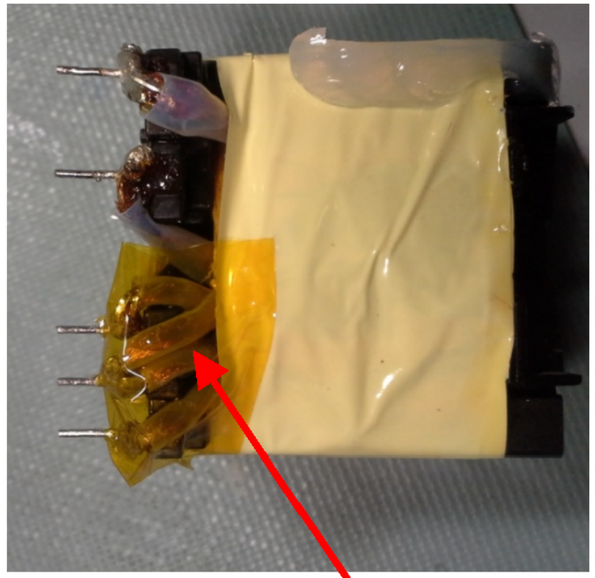

APPLY 1" WIDE KAPTON TAPE OVER PIN AND LEADS ON T1

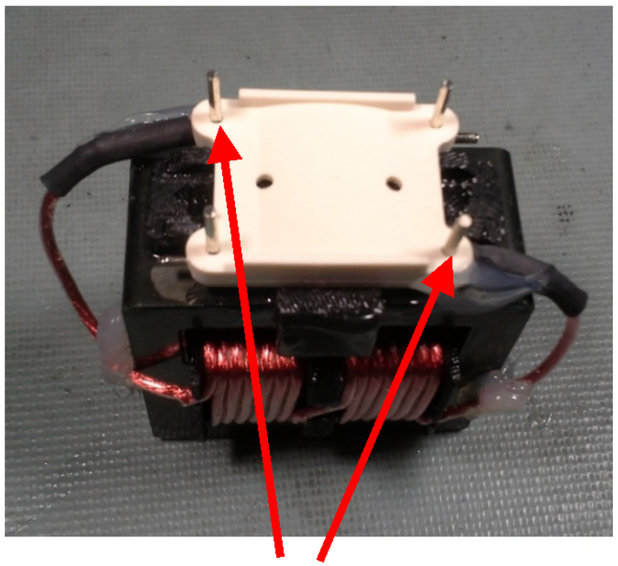

DO NOT GET SILICONE ON PINS

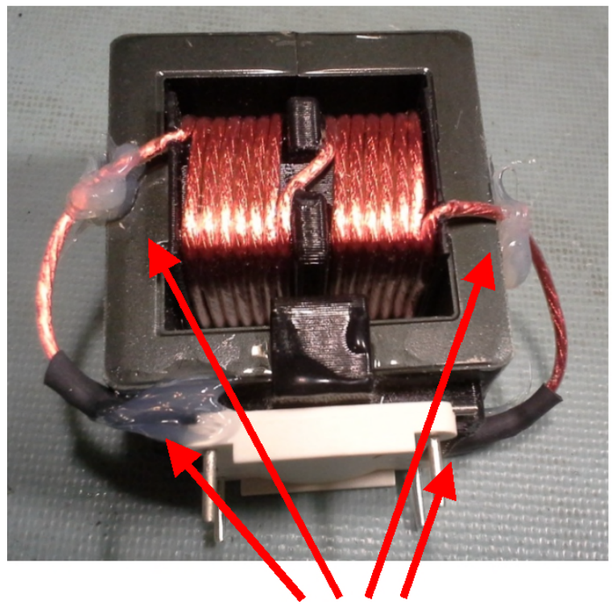

SILICONE APPLIED TO 4 PLACES ON L204

THIS SHEET CONTAINS SPECIAL PRODUCTION NOTES AND A LIST OF PCB HARDWARE PARTS REQUIRED FOR THE BUILD.

Yorkville	Section: Assembly Documentation				
	Product(s): PS12PCE-PS15PCE				
	PCB#: M1527	Rev#: V03	EML Rev#: XX	Sheet 7 Of 8	
	Modified: 2018-01-12	File: Pre-Assembly.SchDoc		Tmp Rev: TemplateRev	

PCB ASSEMBLY DOCUMENTATION

SPECIAL PRODUCTION NOTES

1. THERMISTOR R272 (YS# 6619) IS HAND INSERTED.

2. DO NOT STUFF COMPONENTS MARKED WITH DNS. IN THE LAYOUT PADS WITH NO COMPONENT OUTLINE OR REF DESIGNATOR ARE ALSO NOT STUFFED.

3. ADD APPROPRIATE SPACERS TO LEGS OF XTRS AND RECTIFIERS AS INDICATD IN PICS 1-3.
   SEE ALSO PRE-ASSEMBLY NOTES

4. CUT LEADS SHORT ON ALL HAND PLACED TRANSISTORS.

5. NOTE THAT THIS BOARD USES A WAVE SHIELD THAT REQUIRES THE SOLDER WAVE BE SET TO THE PROPER HEIGHT AND SPEED.

6. AFTER WAVE SOLDER. PLACE SHLD2 (YS#1668) ON BOTTOM OF BOARD AND HAND SOLDER.

7. APPLY RTV WHERE INDICATED AND BETWEEN TALL COMPONENTS.

8. BEFORE TRANSPORTING TO WIRING PLEASE SEPARATE BOARD FROM PANEL USING PIZZA CUTTER
   THEN BREAKING NON SCORED END GENTLY WITH APPROPRIATE TOOL

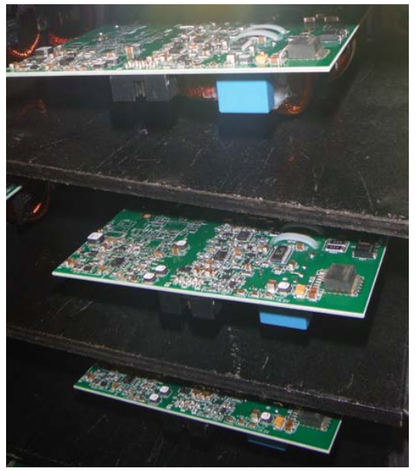

BOARDS PLACED UPSIDE DOWN ON RACK AFTER WAVE SOLDERING

PIC. 2

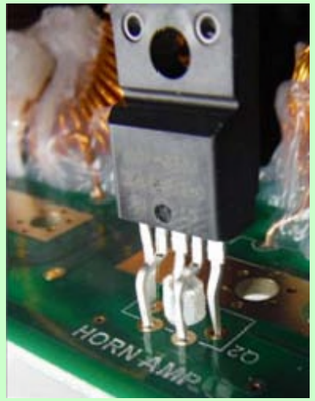

ADD 1 SPACER YS# 8607 TO MIDDLE REAR LEG OF Q2 AS SHOWN

PIC. 1

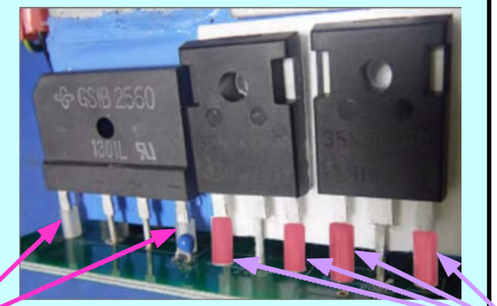

8607

ADD NUMBERS OF SPACERS YS# 8607 AND 9067 INDICATED TO LEGS SHOWN FOR D201, Q206 AND Q207

9067

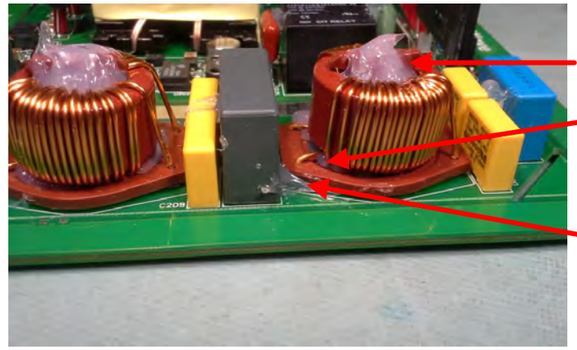

INJECT SILICONE INTO COILS, NOTE SILICONE MUST COME OUT FOR A GOOD FILL

SILICONE IS ALSO INJECTED FROM BOTTOM OF PCB, IT MUST COME OUT UNDER PART.

HAND SOLDER SHLD2 IN 4 PLACES

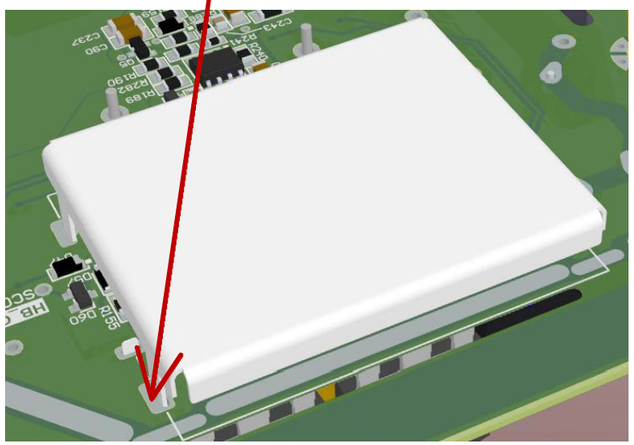

AFTER WAVE SOLDERING, SOLDER SHLD 2 TO BOTTOM OF PCB WHERE SHOWN

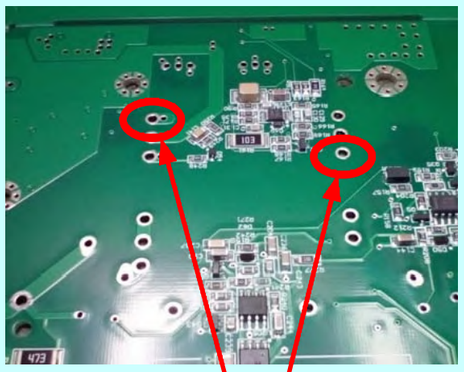

Bend these 2 leads on back of board after inserting T1 (YS# 1226)

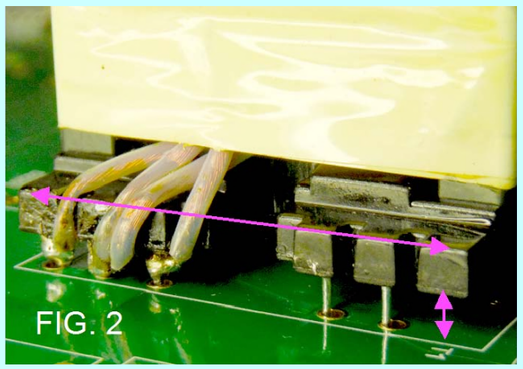

Bending the 2 leads indicated in Fig 1 should level the XFMR T1 as shown in Fig 2 above

PIC. 3

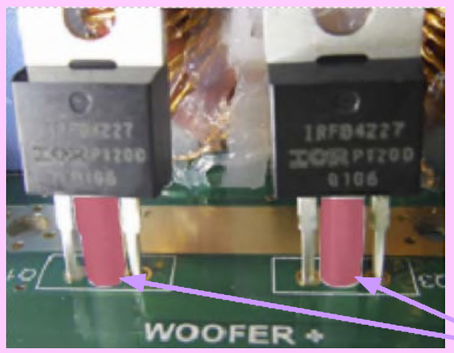

9067

ADD A #9067 SPACER TO THE MIDDLE LEG OF Q1, Q3, Q6, Q7, D203 AND D220

THIS SHEET CONTAINS SPECIAL PRODUCTION NOTES AND A LIST OF PCB HARDWARE PARTS REQUIRED FOR THE BUILD.

Yorkville	Section:	Assembly Documentation			
	Product(s):	PS12PCE-PS15PCE			
	PCB#: M1527	Rev#: V03	EML Rev#: XX	Sheet 7 Of 8	
	Modified: 2018-01-12	File: Assembly.SchDoc		Tmp Rev: TemplateRev	

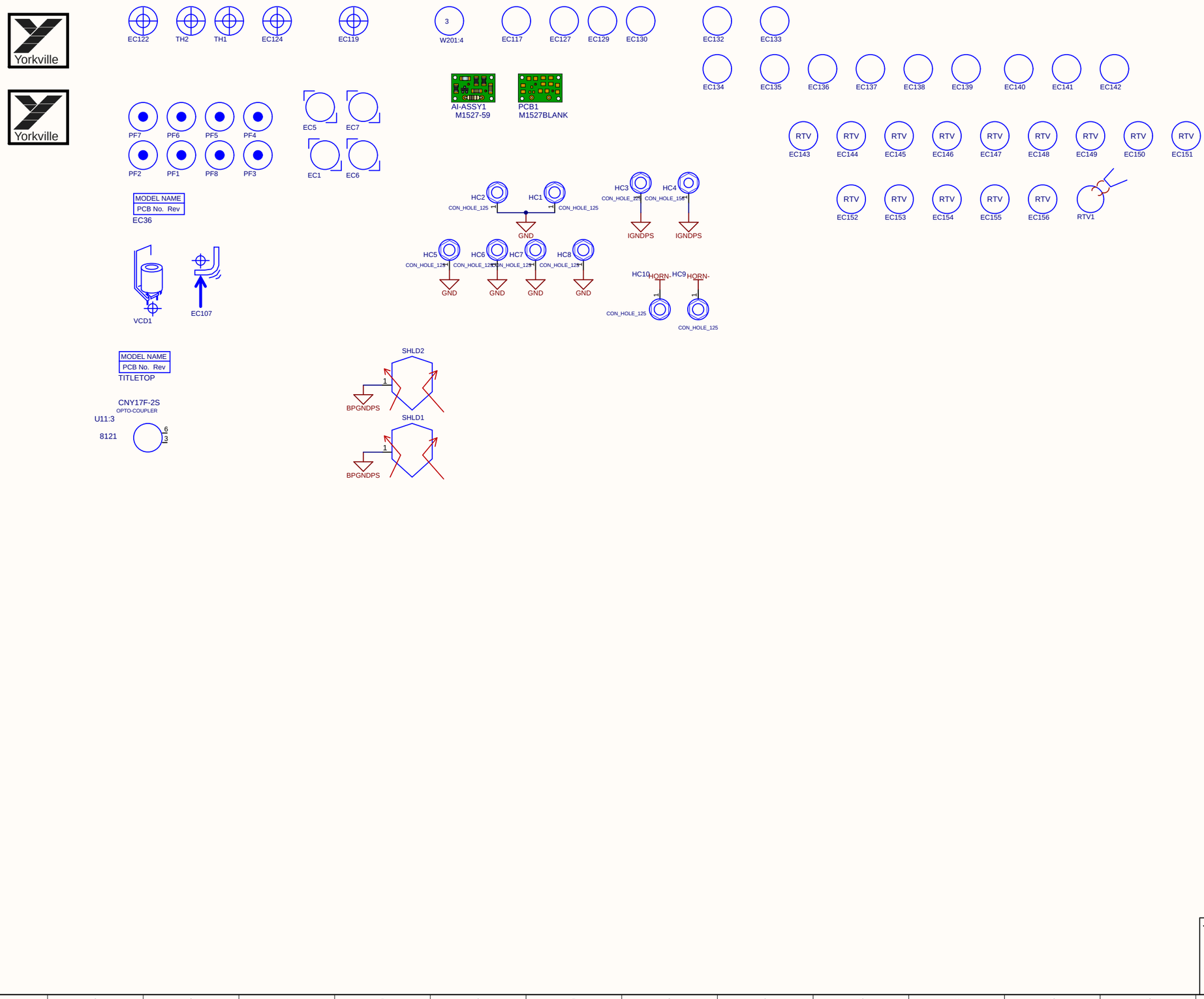

Product	**PS 12P/15P**		
ECO.SCHDOC	PCB# M1528	Sheet 8 of 8	
Date: 2018-01-12	Rev:V01P0	YsType:YsType	
Filename: ECO.SCHDOC			

Into Wave

Score

BlankSize - 139.7mmX281.94mm

Yorkville
© 2016

PS12PCE-PS15PCE
M1527 V03
2MM THK

Score
CLINCH

VCD▶ M1527 V03 PS12PCE-PS15PCE

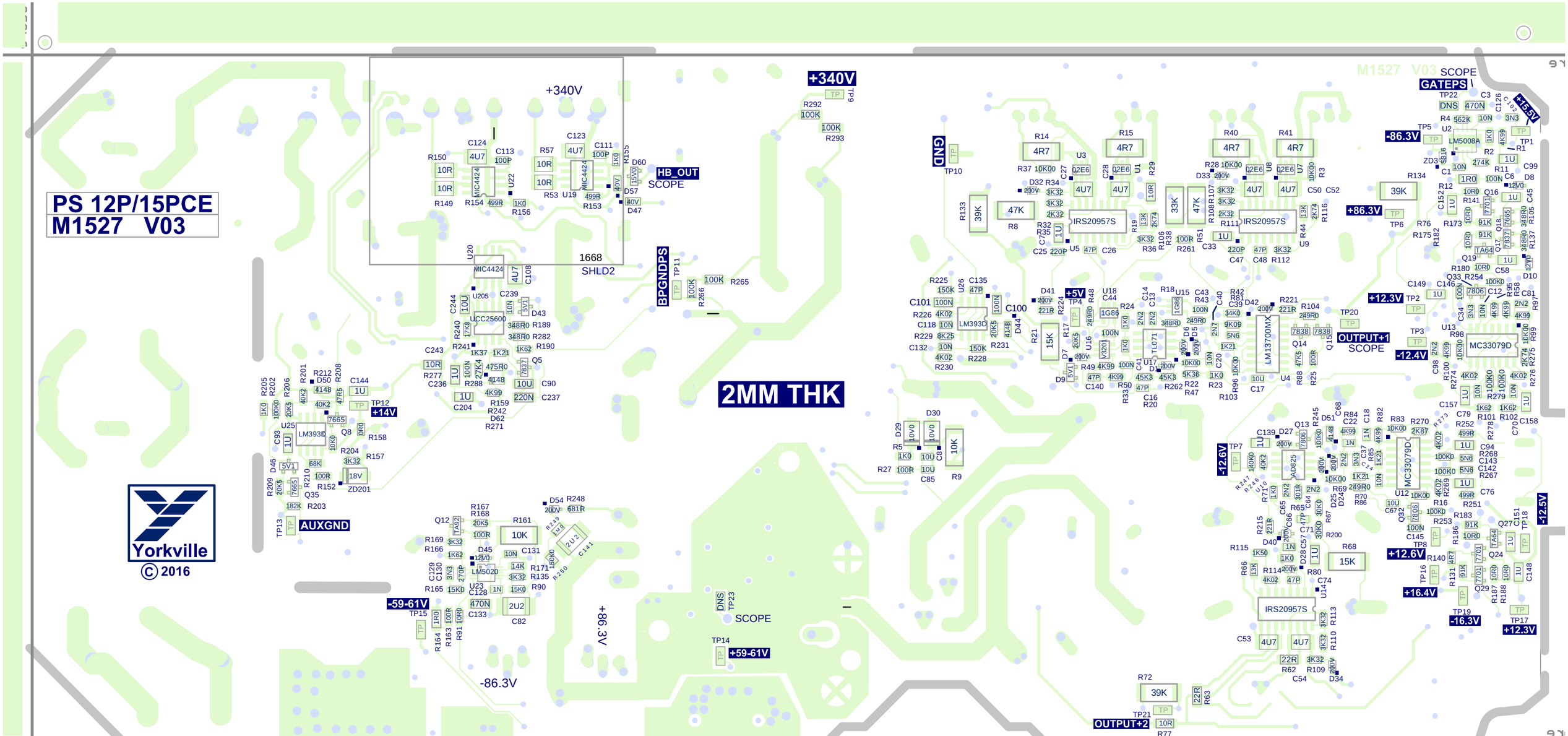

M1527 V03 PS12PCE-PS15PCE

PCB PRE-ASSEMBLY DOCUMENTATION

USE THESE NOTES TO ASSEMBLE OR PREPARE PARTS
BEFORE INSERTING INTO PCB AND ALSO PRIOR TO WAVE

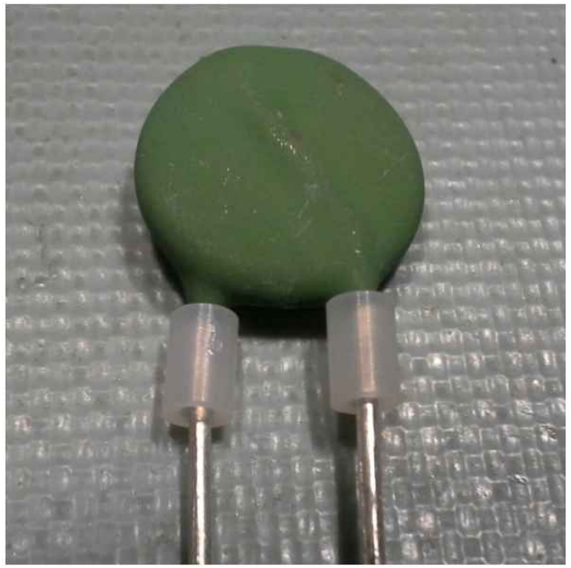

FOR YS PN 6622 USE NYLON SPACER PN 8607



APPLY 1" WIDE KAPTON TAPE OVER PIN AND LEADS ON T1

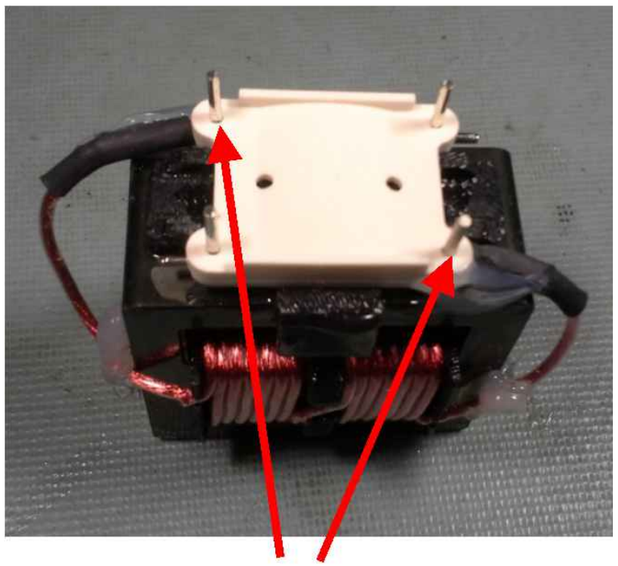

DO NOT GET SILICONE ON PINS

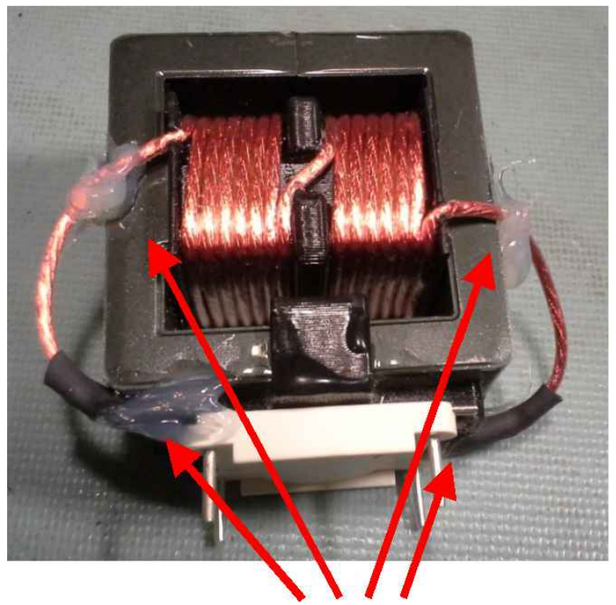

SILICONE APPLIED TO 4 PLACES ON L204

THIS SHEET CONTAINS SPECIAL PRODUCTION NOTES AND A LIST OF PCB HARDWARE PARTS REQUIRED FOR THE BUILD.

Yorkville	Section: Assembly Documentation				
	Product(s): PS12PCE-PS15PCE				
	PCB#: M1527	Rev#: V03	EML Rev#: XX	Sheet 7 Of 8	
	Modified: 2018-01-12	File: Pre-Assembly.SchDoc		Tmp Rev: TemplateRev	

PCB ASSEMBLY DOCUMENTATION

SPECIAL PRODUCTION NOTES

1. THERMISTOR R272 (YS# 6619) IS HAND INSERTED.

2. DO NOT STUFF COMPONENTS MARKED WITH DNS. IN THE LAYOUT PADS WITH NO COMPONENT OUTLINE OR REF DESIGNATOR ARE ALSO NOT STUFFED.

3. ADD APPROPRIATE SPACERS TO LEGS OF XTRS AND RECTIFIERS AS INDICATD IN PICS 1-3.
   SEE ALSO PRE-ASSEMBLY NOTES

4. CUT LEADS SHORT ON ALL HAND PLACED TRANSISTORS.

5. NOTE THAT THIS BOARD USES A WAVE SHIELD THAT REQUIRES THE SOLDER WAVE BE SET TO THE PROPER HEIGHT AND SPEED.

6. AFTER WAVE SOLDER. PLACE SHLD2 (YS#1668) ON BOTTOM OF BOARD AND HAND SOLDER.

7. APPLY RTV WHERE INDICATED AND BETWEEN TALL COMPONENTS.

8. BEFORE TRANSPORTING TO WIRING PLEASE SEPARATE BOARD FROM PANEL USING PIZZA CUTTER
   THEN BREAKING NON SCORED END GENTLY WITH APPROPRIATE TOOL

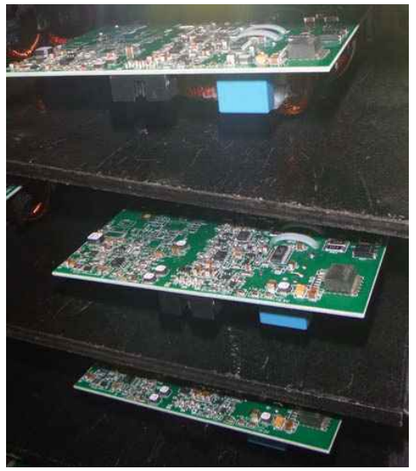

BOARDS PLACED UPSIDE DOWN ON RACK AFTER WAVE SOLDERING

PIC. 2



ADD 1 SPACER YS# 8607 TO MIDDLE REAR LEG OF Q2 AS SHOWN

PIC. 1

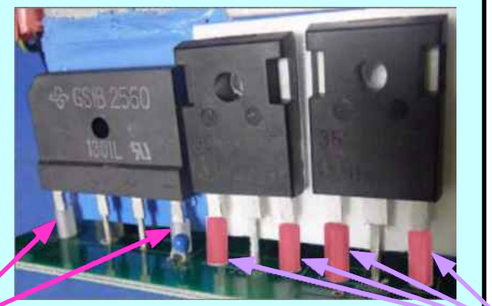

8607

ADD NUMBERS OF SPACERS YS# 8607 AND 9067 INDICATED TO LEGS SHOWN FOR D201, Q206 AND Q207

9067

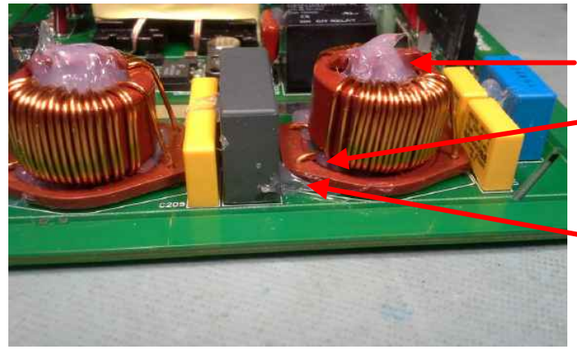

INJECT SILICONE INTO COILS, NOTE SILICONE MUST COME OUT FOR A GOOD FILL

SILICONE IS ALSO INJECTED FROM BOTTOM OF PCB, IT MUST COME OUT UNDER PART.

HAND SOLDER SHLD2 IN 4 PLACES

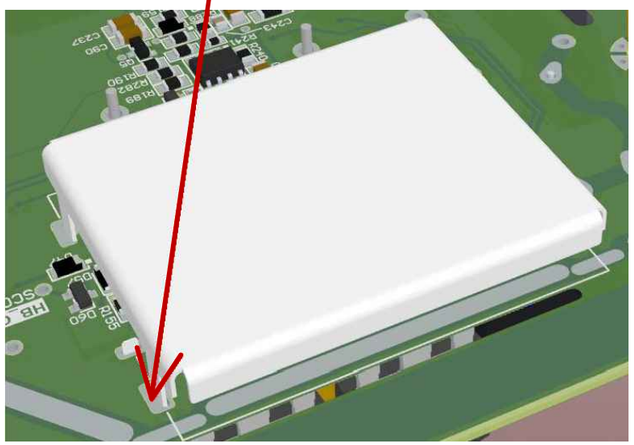

AFTER WAVE SOLDERING, SOLDER SHLD 2 TO BOTTOM OF PCB WHERE SHOWN

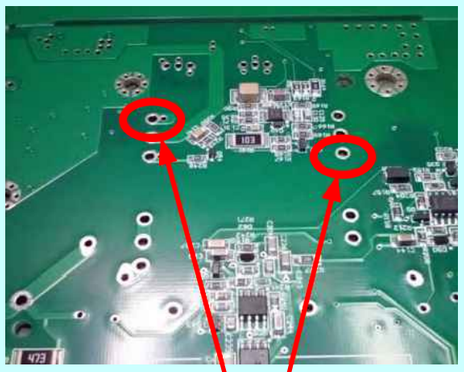

Bend these 2 leads on back of board after inserting T1 (YS# 1226)

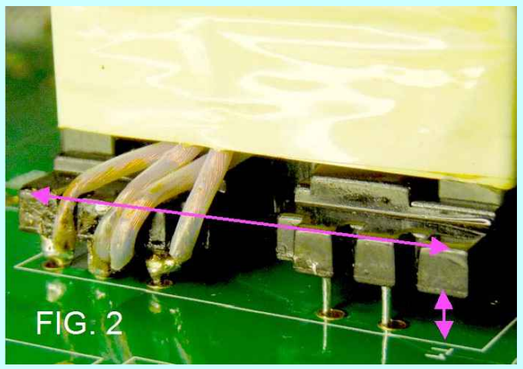

Bending the 2 leads indicated in Fig 1 should level the XFMR T1 as shown in Fig 2 above

PIC. 3

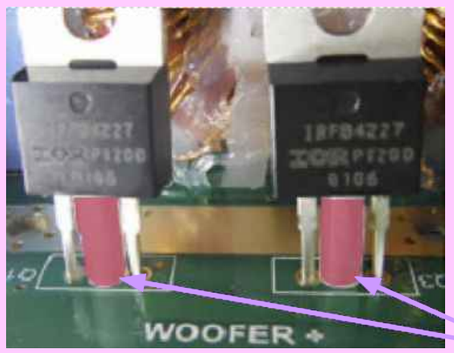

9067

ADD A #9067 SPACER TO THE MIDDLE LEG OF Q1, Q3, Q6, Q7, D203 AND D220

THIS SHEET CONTAINS SPECIAL PRODUCTION NOTES AND A LIST OF PCB HARDWARE PARTS REQUIRED FOR THE BUILD.

Yorkville	Section: Assembly Documentation				
	Product(s): PS12PCE-PS15PCE				
	PCB#: M1527	Rev#: V03	EML Rev#: XX	Sheet 7 Of 8	
	Modified: 2018-01-12	File: Assembly.SchDoc		Tmp Rev: TemplateRev	

DESIGN HISTORY AND INFORMATION

CHANGE HISTORY

#	DATE	VER#	PC#	DESCRIPTION OF CHANGE
1	02-JUN-2016	V01	.	RELEASED FOR PRODUCTION
2	26-JUL-2016	.	8885	UPDATED SYMBOL FOR IRS20957S
3	16-SEP-2016	.	8965	ADDED PRE-ASSEMBLY PAGE FOR ADDITIONAL PROCESS NOTES
4	03-FEB-2017	V02	.	ADD VIAS TO REINFORCE HIGH CURRENT CONNECTED COMPONENTS
5			.	CHANGE THICKNESS OF BOARD TO 2MM
6	20-JUN-2017	V02	.	RELEASED FOR PRODUCTION
7		.	.	
8	.	.	.	.
9	.	.	.	.
10	.	.	.	.
11	.	.	.	.
12	.	.	.	.
13		.	.	.

#	DATE	VER#	PC#	DESCRIPTION OF CHANGE
1	.	.	.	.
2	.	.	.	.
3	.	.	.	.
4	.	.	.	.
5	.	.	.	.
6	.	.	.	.
7	.	.	.	.
8	.	.	.	.
9	.	.	.	.
10	.	.	.	.
11	.	.	.	.
12	.	.	.	.
13	.	.	.	.

#	DATE	VER#	PC#	DESCRIPTION OF CHANGE
1	.	.	.	.
2	.	.	.	.
3	.	.	.	.
4	.	.	.	.
5	.	.	.	.
6	.	.	.	.
7	.	.	.	.
8	.	.	.	.
9	.	.	.	.
10	.	.	.	.
11	.	.	.	.
12	.	.	.	.
13	.	.	.	.

POTENTIOMETERS AND KNOBS

POTENTIOMETERS AND KNOBS			
REF	FUNCTION	POT#	KNOB#
.	.	.	.
.	.	.	.
.	.	.	.
.	.	.	.
.	.	.	.
.	.	.	.
.	.	.	.
.	.	.	.
.	.	.	.
.	.	.	.
.	.	.	.
.	.	.	.
.	.	.	.
.	.	.	.

PINOUT DIAGRAMS

THIS SHEET CONTAINS A CHANGE HISTORY LOG, A LIST OF THE POTS & KNOBS AND A LEADS & PINS REFERENCE SECTION.

Yorkville

Section: Design Information And History
Product(s): PS12PCE-PS15PCE
PCB#: M1527 | Rev#: V03 | EML Rev#: XX | Sheet 6 Of 6
Modified: 2018-01-12 | File: History.SchDoc | Tmp Rev: TemplateRev

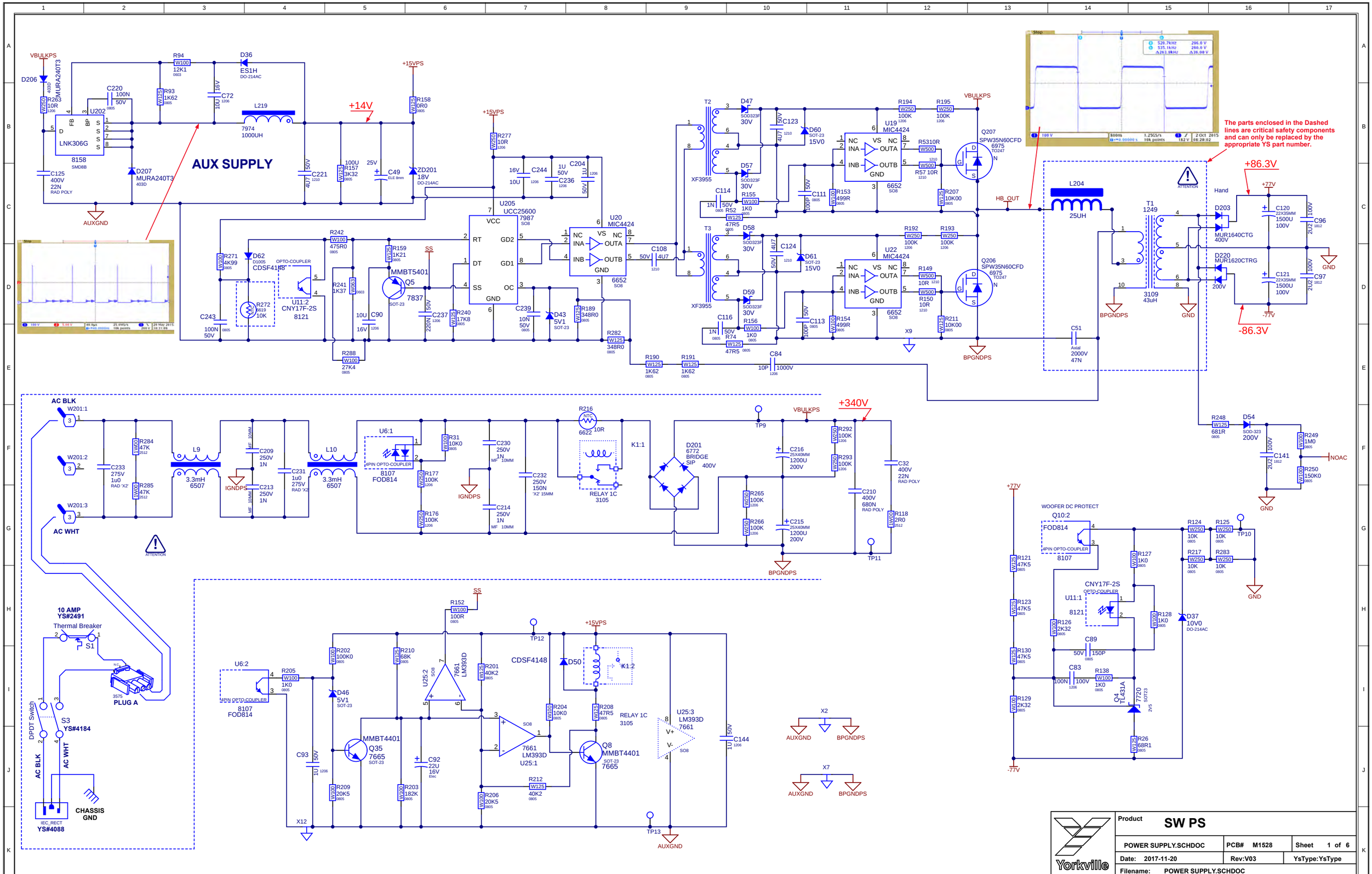
AUX SUPPLY
The parts enclosed in the Dashed lines are critical safety components and can only be replaced by the appropriate YS part number.
+14V
+15VPS
+86.3V
-86.3V
+340V
VBULKPS
AUXGND
BPGNDPS
HB_OUT
AC BLK
AC WHT
10 AMP
YS#2491
Thermal Breaker
PLUG A
DPDT Switch
YS#4184
CHASSIS GND
YS#4088
WOOFER DC PROTECT
NOAC
Product
SW PS
POWER SUPPLY.SCHDOC
PCB# M1528
Sheet 1 of 6
Date: 2017-11-20
Rev:V03
YsType:YsType
Filename: POWER SUPPLY.SCHDOC
Yorkville

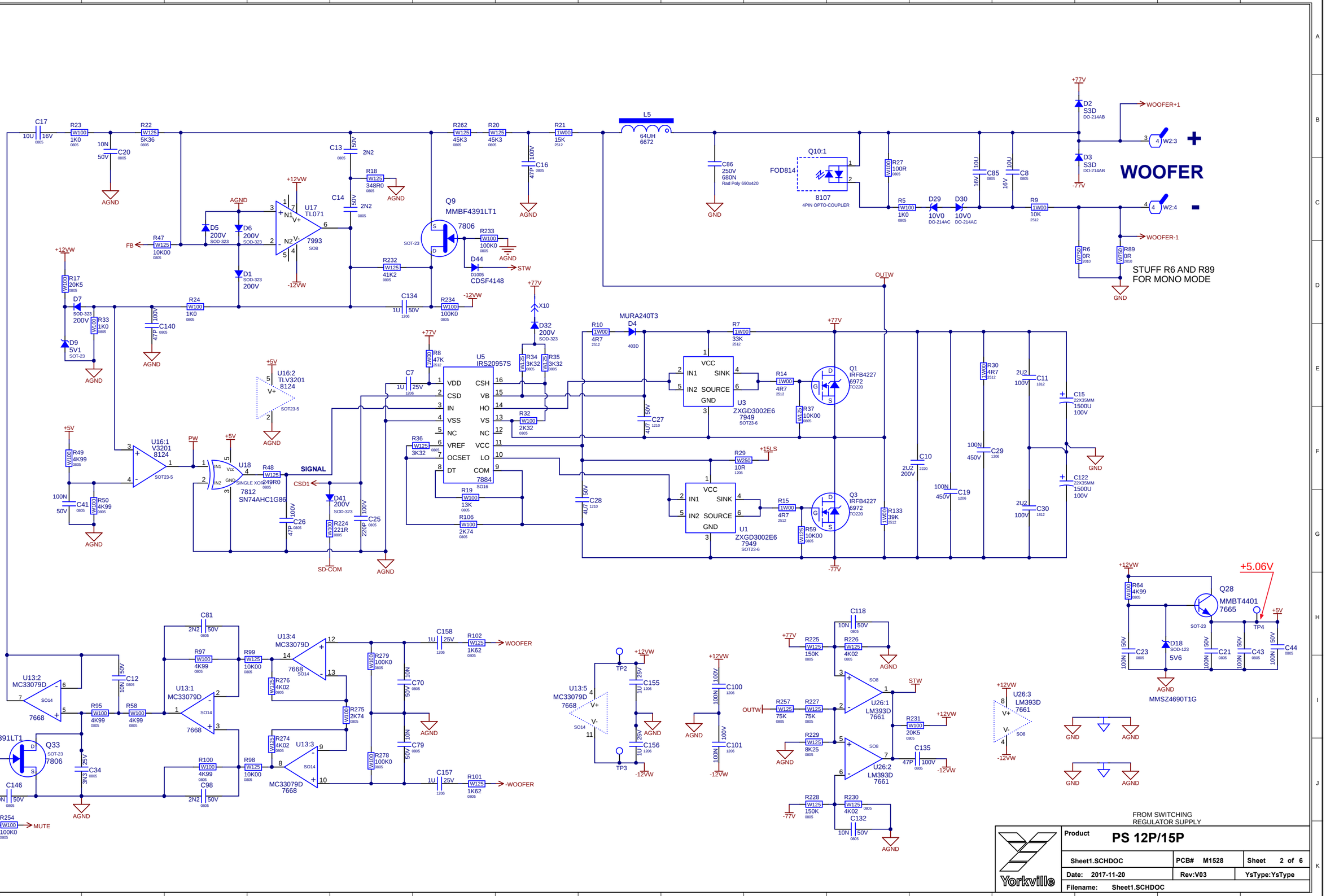
WOOFER
+
-
STUFF R6 AND R89
FOR MONO MODE
WOOFER+1
WOOFER-1
+5.06V
FROM SWITCHING
REGULATOR SUPPLY
Yorkville
Product
PS 12P/15P
Sheet1.SCHDOC
PCB# M1528
Sheet 2 of 6
Date: 2017-11-20
Rev:V03
YsType:YsType
Filename: Sheet1.SCHDOC

BI AMP WOOFER

+12VW
-12VW
U4
LM13700MX
C39
5N6 50V 0805
R81
W100
9K09
0805
AGND
R170
W100
2K21
0805
C103
33P 100V
0603
FB
R42
W25
34K0
0805
R96
W125
10K00
0805
R88
W25
47K5
0805
R25
W100
100R
0805
R103
W25
1K21
0805
2N7
C40
0805
100V
Q14
MMBT3904
7838
SOT-23
Q15
MMBT3904
7838
SOT-23
R104
W25
249R0
0805
R264
W125
45K3
0805
R45
W125
45K3
0805
R46
1W00
15K
2512
C42
47P
0805
D16
200V
SOD-323
D15
200V
SOD-323
OUTPUT+1
L6
64UH
6672
+77V
D11
S3D
DO-214AB
D12
S3D
DO-214AB
-77V
WOOFER-1
C87
250V
680N
Rad Poly 690x420
GND
X11
D33
200V
SOD-323
R39
1W00
4R7
2512
D13
MURA240T3
403D
R38
1W00
33K
2512
TP6
U9
IRS20957S
VDD
CSD
IN
VSS
NC
VREF
OCSET
DT
CSH
VB
HO
VS
NC
VCC
LO
COM
7884
SO16
C33
1U 25V
1206
R51
1W00
47K
2512
R107
W125
3K32
R108
W125
3K32
R111
W100
2K32
0805
R112
W125
3K32
0805
R44
W100
13K
0805
R116
W100
2K74
0805
C50
4U7
1210
50V
U8
ZXGD3002E6
7949
SOT23-6
R40
1W00
4R7
2512
Q6
IRFB4227
6972
TO220
R28
W25
10K00
0805
TP20
R55
W250
10R
1206
+15LS
U7
ZXGD3002E6
7949
SOT23-6
R41
1W00
4R7
2512
Q7
IRFB4227
6972
TO220
R3
W25
10K00
0805
C52
4U7
1210
50V
R134
1W00
39K
2512
C36
2220
200V
2U2
C35
1206
100N
450V
C38
100N
450V
1206
R56
1W00
4R7
2512
C55
1812
2U2
100V
C56
1812
2U2
100V
GND
+5V
U15
SN74AHC1G86
7812
SINGLE XOR
PW
R43
W125
249R0
0805
C48
47P
0805
100V
D42
200V
SOD-323
R221
W100
221R
0805
C47
220P
0805
100V
SD-COM
AGND
CSD2
R261
W100
100R
0805
CSD1
L11
D35
5V1
PDI-123
120uH
2910
GND1
R13
W250
10R
1206
R120
W250
10R
1206
U2
LM5008A
6666
WSON
VCC
VIN
RT_SD
RCL
RTN
BST
SW
FB
R4
W25
562K
0805
C3
470N
1206
100V
C4
100N
100V
1206
C5
2U2
100V
1812
R11
W100
274K
0805
C1
10N 50V
0805
L1
220UH
7732
TP22
R160
W100
100K0
0805
C102
3N3 25V
0805
C126
10N
0805
50V
R1
W100
4K99
0805
ZD3
100V
SOD-323
TP5
R2
W100
1K0
0805
C2
1U
25V
1206
C99
1U
25V
1206
TP1
+15LS
C6
100N
50V
0805
R12
W250
1R0
1206
-77V
+15.5V
GND
GND1
```
Ch1 Stop
4 40.0 V
2.00µs 500MS/s
T→-20.0000ns 10k points
4 ⎍ 55.2 V
14 Oct 2015
08:52:28
```
```
Ch1 Stop
OUTW
OUTPUT+1
a 136.6kHz −162.5mV
b 77.21kHz −162.5mV
Δ177.5kHz Δ0.000 V
1 50.0 V
2 50.0 V
2.00µs 500MS/s
T→5.98000µs 10k points
1 ⎍ 28.0 V
14 Oct 2015
09:15:25
```

Yorkville

Product	**PS 12P/15P**		
Sheet2.SCHDOC	PCB# M1528	Sheet 3 of 6	
Date: 2017-11-20	Rev:V03	YsType:YsType	
Filename: Sheet2.SCHDOC			

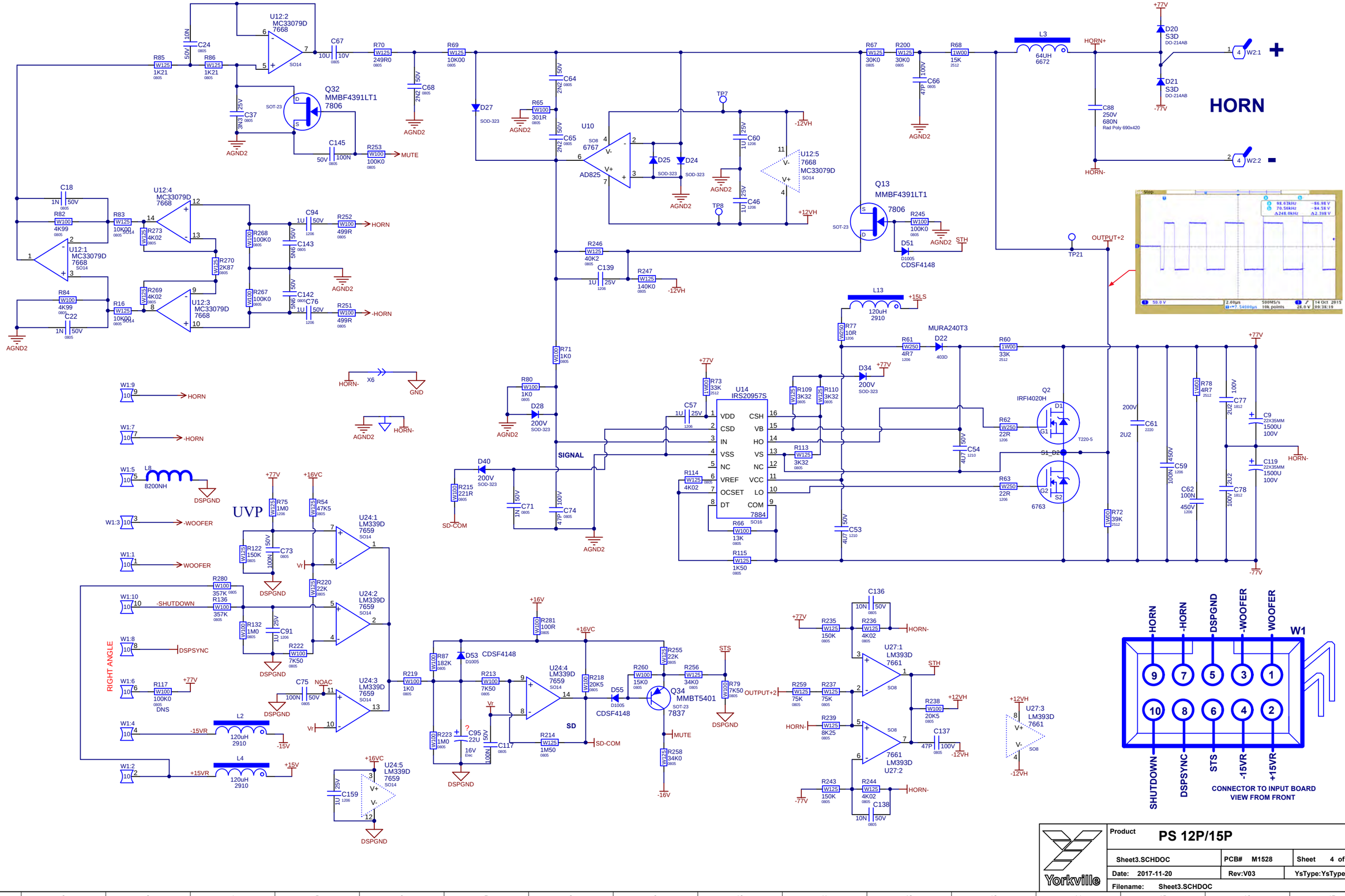
U12:2 MC33079D 7668
C24 10N 50V
C67 10U 10V
R70 W125 249R0
R69 W125 10K00
C68 2N2
R85 W125 1K21
R86 W125 1K21
C37 3N3 25V
Q32 MMBF4391LT1 7806
C145 100N 50V
R253 W100 100K0
MUTE
AGND2
D27
R65 W100 301R
C64 2N2 50V
C65 2N2 50V
U10 SO8 6767 AD825
D25
D24
TP7
TP8
C60 1U 25V
C46 1U 25V
U12:5 7668 MC33079D SO14
-12VH
+12VH
R67 W125 30K0
R200 W125 30K0
C66 47P 100V
R68 1W00 15K 2512
L3 64UH 6672
HORN+
HORN-
C88 250V 680N Rad Poly 690x420
+77V
D20 S3D DO-214AB
D21 S3D DO-214AB
-77V
W2:1
W2:2
HORN
Q13 MMBF4391LT1 7806
R245 W100 100K0
D51 D1005 CDSF4148
STH
TP21
OUTPUT+2
C18 1N 50V
R82 W100 4K99
R84 W100 4K99
C22 1N 50V
U12:1 MC33079D 7668
U12:4 MC33079D 7668
U12:3 MC33079D 7668
R83 W125 10K00
R16 W125 10K00
R273 W250 4K02
R269 W250 4K02
R270 W250 2K87
R268 W100 100K0
R267 W100 100K0
C94 1U 50V
C143 5N6 50V
C142 5N6 50V
C76 1U 50V
R252 W100 499R
R251 W100 499R
HORN
-HORN
R246 W125 40K2
C139 1U 25V
R247 W125 140K0
R71 W100 1K0
R80 W100 1K0
D28 200V SOD-323
L13 120uH 2910
+15LS
R77 W250 10R 1206
MURA240T3
R61 W250 4R7 1206
D22 403D
R60 1W00 33K 2512
D34 200V SOD-323
Q2 IRFI4020H
R62 W250 22R 1206
R63 W250 22R 1206
6763
T220-5
S1_D2
G1
G2
S2
R72 1W00 39K 2512
C61 200V 2U2 2220
C59 450V 100N
C62 100N 450V 1206
R78 4R7 1W00 2512
C77 100V 2U2 1812
C78 100V 2U2 1812
C9 22X35MM 1500U 100V
C119 22X35MM 1500U 100V
HORN-
-77V
U14 IRS20957S
VDD CSH
CSD VB
IN HO
VSS VS
NC NC
VREF VCC
OCSET LO
DT COM
7884 SO16
SIGNAL
C57 1U 25V
R73 W00 33K 2512
R109 W125 3K32
R110 W125 3K32
R113 W125 3K32
R114 W125 4K02
R115 W125 1K50
R66 W100 13K
C54 4U7 50V
C53 4U7 50V
D40 200V SOD-323
R215 W100 221R
C71 1N 50V
C74 47P 100V
SD-COM
AGND2
W1:9 10 9 HORN
W1:7 10 7 -HORN
W1:5 10 5 L8 8200NH DSPGND
W1:3 10 3 -WOOFER
W1:1 10 1 WOOFER
W1:10 10 -SHUTDOWN
W1:8 10 8 DSPSYNC
W1:6 10 6 R117 W100 100K0 DNS +77V
W1:4 10 4 -15VR L2 120uH 2910 -15V
W1:2 10 2 +15VR L4 120uH 2910 +15V
RIGHT ANGLE
UVP
+77V
+16VC
R75 W125 1M0 1206
R54 W125 47K5 0805
U24:1 LM339D 7659 SO14
U24:2 LM339D 7659 SO14
U24:3 LM339D 7659 SO14
U24:5 LM339D 7659 SO14
R122 W125 150K 0805
C73 100N 50V 0805
R220 W125 22K 0805
R280 W100 357K 0805
R136 W100 357K 0805
R132 W100 1M0 0805
C91 1U 25V 1206
R222 W100 7K50 0805
C75 100N 50V 0805
NOAC
DSPGND
Vr
R219 W100 1K0 0805
R281 W100 100R 0805
+16V
R87 W100 182K 0805
D53 D1005 CDSF4148
R213 W100 7K50 0805
U24:4 LM339D 7659 SO14
R218 W100 20K5 0805
D55 D1005 CDSF4148
R214 W125 1M50 0805
R223 W100 1M0 0805
C95 22U 16V Elec
C117 100N 50V 0805
SD
SD-COM
R260 W100 15K0 0805
R255 W125 22K 0805
R256 W125 34K0 0805
Q34 MMBT5401 SOT-23 7837
MUTE
R258 W125 34K0 0805
R79 W100 7K50 0805
STS
-16V
OUTPUT+2
U27:1 LM393D 7661
U27:2 7661 LM393D
U27:3 LM393D 7661 SO8
R235 W125 150K 0805
R236 W125 4K02 0805
R259 W125 75K 0805
R237 W125 75K 0805
R239 W125 8K25 0805
R243 W125 150K 0805
R244 W125 4K02 0805
R238 W100 20K5 0805
C136 10N 50V 0805
C138 10N 50V 0805
C137 47P 100V 0805
+12VH
-12VH
HORN-
-77V
W1
HORN
-HORN
DSPGND
-WOOFER
WOOFER
SHUTDOWN
DSPSYNC
STS
-15VR
+15VR
CONNECTOR TO INPUT BOARD
VIEW FROM FRONT
Yorkville
Product
PS 12P/15P
Sheet3.SCHDOC
PCB# M1528
Sheet 4 of 6
Date: 2017-11-20
Rev:V03
YsType:YsType
Filename: Sheet3.SCHDOC

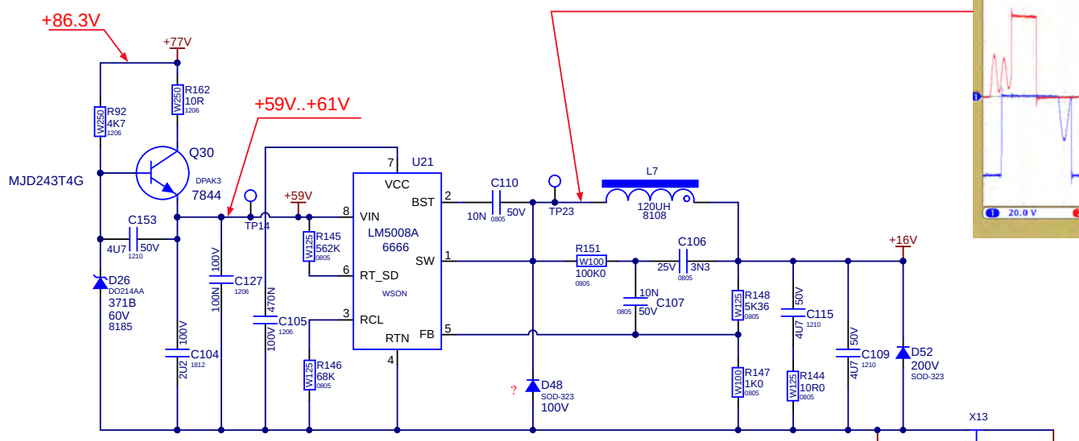

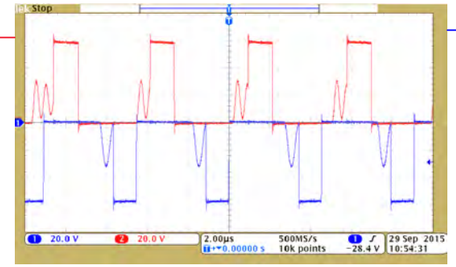

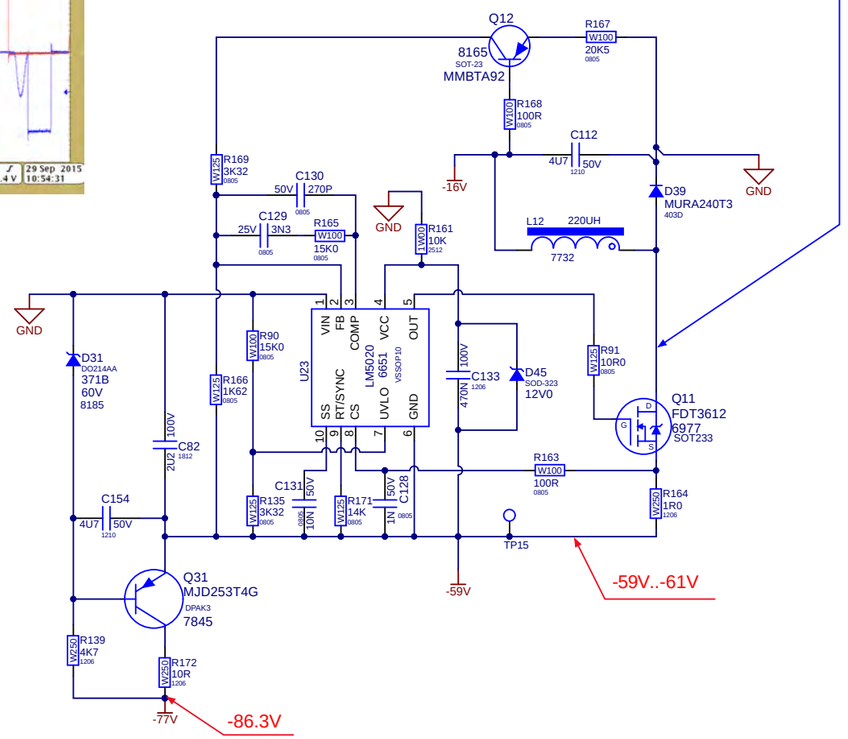

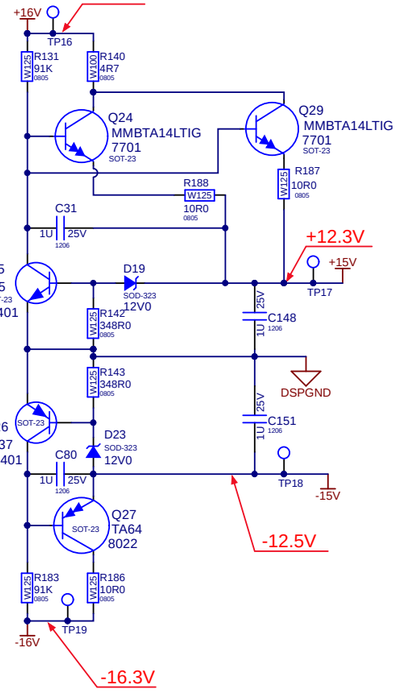

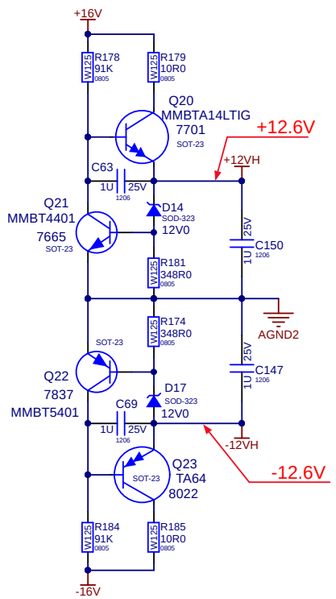

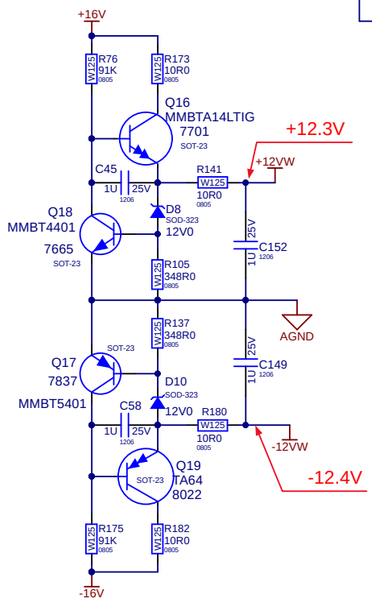

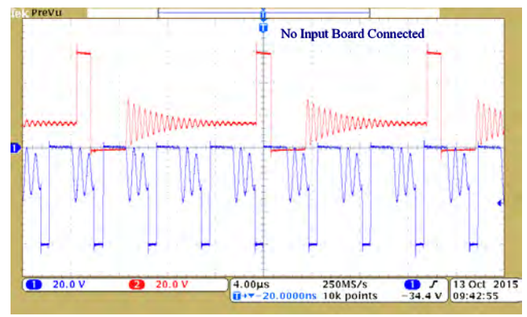

Yorkville	Section: LV Pwr Supply				
	Product(s): PS12P-PS15P				
	PCB#: M1528	Rev#: V03	EML Rev#: XX	Sheet 5 Of 6	
	Modified: 2017-11-20	File: LV-PS.SchDoc		Tmp Rev: TemplateRev	

DESIGN HISTORY AND INFORMATION

CHANGE HISTORY

#	DATE	VER#	PC#	DESCRIPTION OF CHANGE
1	02-JUN-2016	V01	.	RELEASED FOR PRODUCTION
2	26-JUL-2016	.	8885	UPDATED SYMBOL FOR IRS20957S
3	16-SEP-2016	.	8965	ADDED PRE-ASSEMBLY PAGE FOR ADDITIONAL PROCESS NOTES
4	03-FEB-2017	V02	.	ADD VIAS TO REINFORCE HIGH CURRENT CONNECTED COMPONENTS
5	.	.	.	CHANGE THICKNESS OF BOARD TO 2MM
6	10-JUL-2017	.	.	REVISED NOTES FOR PRE-ASSEMBLY FOR PRE-SOLDERING LARGE COILS
7	.	.	.	REVISED NOTES FOR ADDING RTV POST-WAVE TO L204
8	16-NOV-2017	V03	9140	MOVE R46 TO TOP OF PCB AND ELONGATED COIL PADS
9	.	.	.	.
10	.	.	.	.
11	.	.	.	.
12	.	.	.	.
13	.	.	.	.

#	DATE	VER#	PC#	DESCRIPTION OF CHANGE
1	.	.	.	.
2	.	.	.	.
3	.	.	.	.
4	.	.	.	.
5	.	.	.	.
6	.	.	.	.
7	.	.	.	.
8	.	.	.	.
9	.	.	.	.
10	.	.	.	.
11	.	.	.	.
12	.	.	.	.
13	.	.	.	.

#	DATE	VER#	PC#	DESCRIPTION OF CHANGE
1	.	.	.	.
2	.	.	.	.
3	.	.	.	.
4	.	.	.	.
5	.	.	.	.
6	.	.	.	.
7	.	.	.	.
8	.	.	.	.
9	.	.	.	.
10	.	.	.	.
11	.	.	.	.
12	.	.	.	.
13	.	.	.	.

POTENTIOMETERS AND KNOBS

POTENTIOMETERS AND KNOBS			
REF	FUNCTION	POT#	KNOB#
.	.	.	.
.	.	.	.
.	.	.	.
.	.	.	.
.	.	.	.
.	.	.	.
.	.	.	.
.	.	.	.
.	.	.	.
.	.	.	.
.	.	.	.
.	.	.	.
.	.	.	.

PINOUT DIAGRAMS

THIS SHEET CONTAINS A CHANGE HISTORY LOG, A LIST OF THE POTS & KNOBS AND A LEADS & PINS REFERENCE SECTION.

Yorkville

Section: Design Information And History
Product(s): PS12P-PS15P
PCB#: M1528 | Rev#: V03 | EML Rev#: XX | Sheet 6 Of 6
Modified: 2017-11-20 | File: History.SchDoc | Tmp Rev: TemplateRev

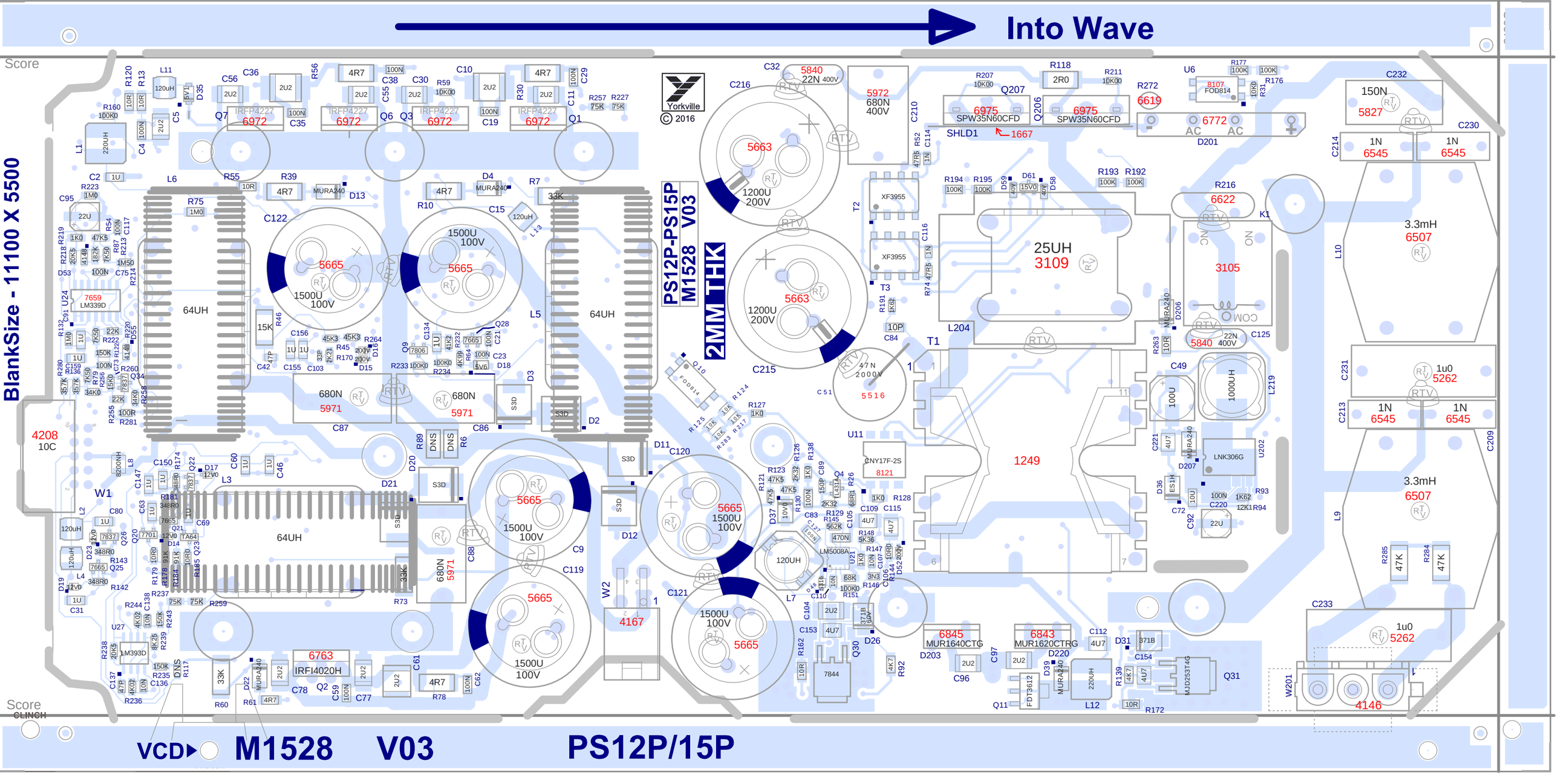

Into Wave
BlankSize - 11100 X 5500
PS12P-PS15P
M1528 V03
2MM THK
Yorkville
© 2016
VCD
M1528
V03
PS12P/15P

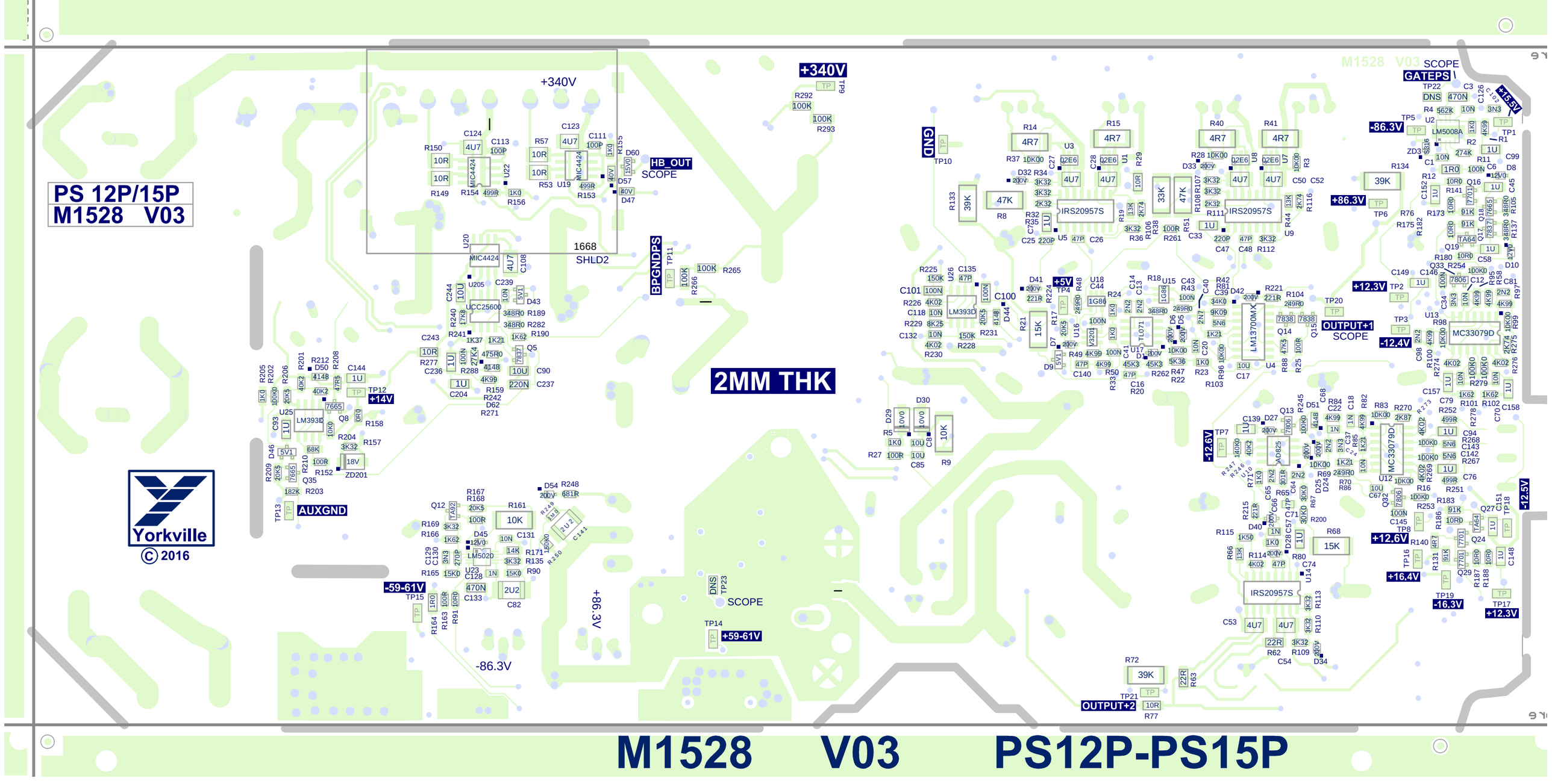
PS 12P/15P
M1528 V03
Yorkville
© 2016
2MM THK
+340V
HB_OUT
SCOPE
1668
SHLD2
BPGNDPS
GND
GATEPS
+15.5V
-86.3V
+86.3V
+12.3V
-12.4V
OUTPUT+1
SCOPE
+5V
+14V
AUXGND
-59-61V
+59-61V
-86.3V
+86.3V
-12.6V
+12.6V
+16.4V
-16.3V
+12.3V
-12.5V
OUTPUT+2
IRS20957S
LM13700MX
MC33079D
LM393D
UCC25600
MIC4424
LM5008A
LM5020
TL071
AD825
M1528 V03 PS12P-PS15P

PCB PRE-ASSEMBLY DOCUMENTATION

USE THESE NOTES TO ASSEMBLE OR PREPARE PARTS
BEFORE INSERTING INTO PCB AND ALSO PRIOR TO WAVE

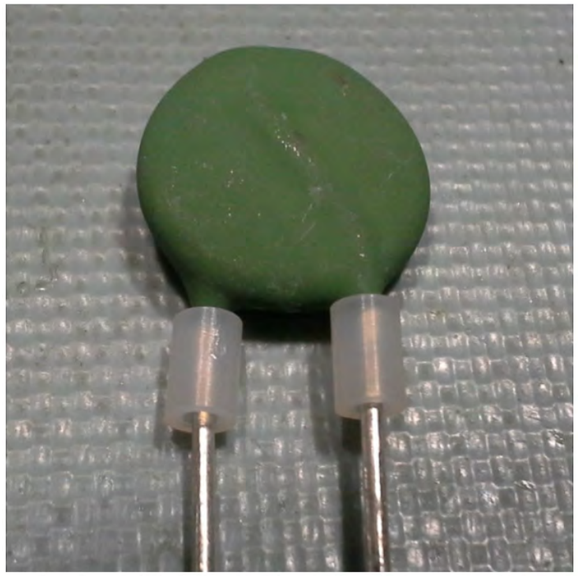

FOR YS PN 6622 USE NYLON SPACER PN 8607

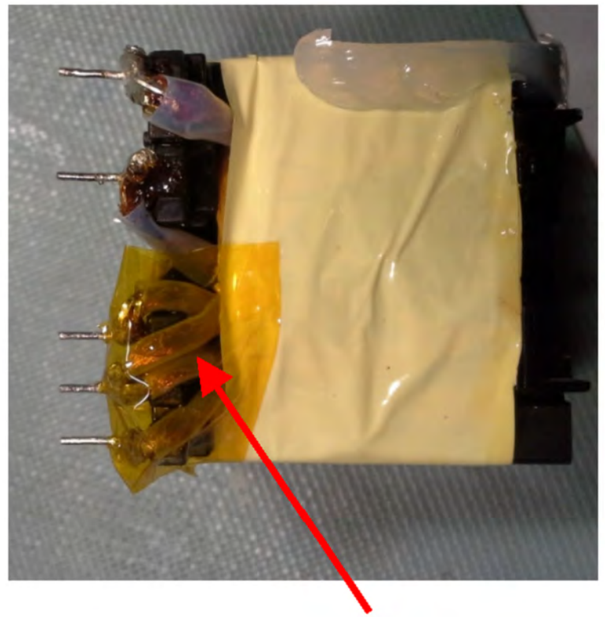

APPLY 1" WIDE KAPTON TAPE OVER PIN AND LEADS ON T1

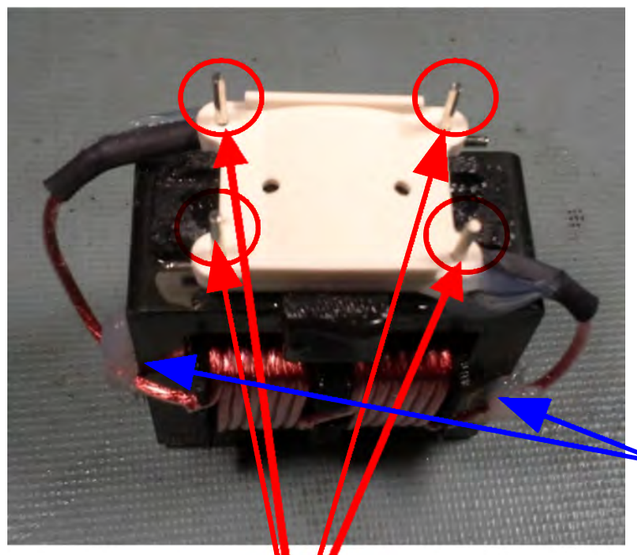

APPLY A SMALL AMOUNT OF RTV WHERE LEADS TOUCH THE CORNERS OF THE COIL. DO NOT APPLY RTV TO BASE OF COIL BEFORE INSERTION INTO BOARD.

DIP LEADS OF COIL (L204 YS#3109) IN FLUX THEN IN SOLDER BEFORE PLACEMENT IN PCB

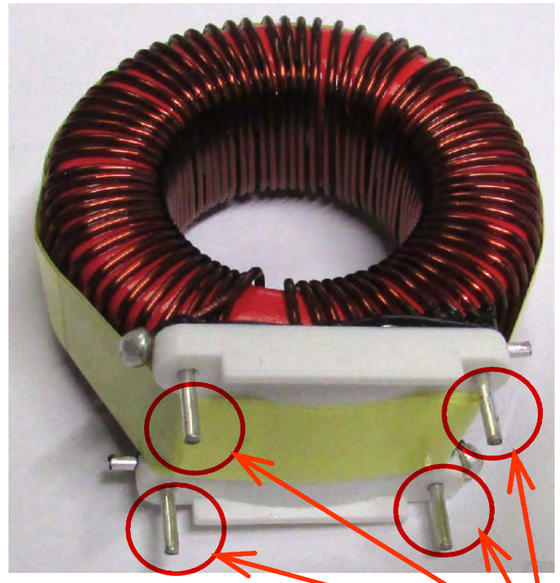

DIP LEADS OF ALL COILS (L3, L5, L6 YS#6672) IN FLUX THEN IN SOLDER BEFORE PLACEMENT IN PCB

THIS SHEET CONTAINS SPECIAL PRODUCTION NOTES AND A LIST OF PCB HARDWARE PARTS REQUIRED FOR THE BUILD.

Yorkville	Section: Assembly Documentation					
	Product(s): PS12P-PS15P					
	PCB#: M1528	Rev#: V03	EML Rev#: XX	Sheet 7 Of 8		
	Modified: 2017-11-16	File: Pre-Assembly.SchDoc		Tmp Rev: TemplateRev		

PCB ASSEMBLY DOCUMENTATION

SPECIAL PRODUCTION NOTES

1. THERMISTOR R272 (YS# 6619) IS HAND INSERTED.

2. DO NOT STUFF COMPONENTS MARKED WITH DNS. IN THE LAYOUT PADS WITH NO COMPONENT OUTLINE OR REF DESIGNATOR ARE ALSO NOT STUFFED.

3. ADD APPROPRIATE SPACERS TO LEGS OF XTRS AND RECTIFIERS AS INDICATD IN PICS 1-3.
   SEE ALSO PRE-ASSEMBLY NOTES

4. CUT LEADS SHORT ON ALL HAND PLACED TRANSISTORS.

5. NOTE THAT THIS BOARD USES A WAVE SHIELD THAT REQUIRES THE SOLDER WAVE BE SET TO THE PROPER HEIGHT AND SPEED.

6. AFTER WAVE SOLDER. PLACE SHLD2 (YS#1668) ON BOTTOM OF BOARD AND HAND SOLDER.

7. APPLY RTV WHERE INDICATED AND BETWEEN TALL COMPONENTS AND IN THE HOLES PROVIDED. NOTE THAT L204 MUST NOT HAVE RTV APPLIED UNDER PART UNTIL AFTER THE WAVE SOLDERING PROCESS AND IN THE HOLE ON THE BOTTOM OF THE BOARD LOCATED NEAR U20.

8. AFTER WAVE AND PCB FINISHING, PLEASE PLACE BOARD ON RACK WITH LARGE COMPONENTS FACING DOWN. SEE PICTURE

9. BEFORE TRANSPORTING TO WIRING PLEASE SEPARATE BOARD FROM PANEL USING PIZZA CUTTER
   THEN BREAKING NON SCORED END GENTLY WITH APPROPRIATE TOOL



BOARDS PLACED UPSIDE DOWN ON RACK AFTER WAVE SOLDERING

PIC. 2



ADD 1 SPACER YS# 8607 TO MIDDLE REAR LEG OF Q2 AS SHOWN

PIC. 1

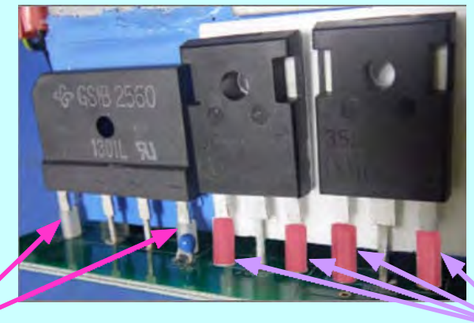

8607

ADD NUMBERS OF SPACERS YS# 8607 AND 9067 INDICATED TO LEGS SHOWN FOR D201, Q206 AND Q207

9067

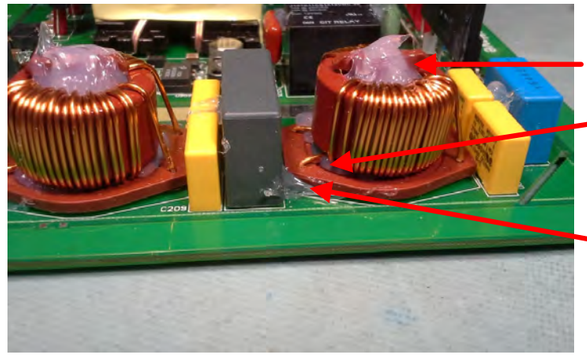

INJECT SILICONE INTO COILS, NOTE SILICONE MUST COME OUT FOR A GOOD FILL

SILICONE IS ALSO INJECTED FROM BOTTOM OF PCB, IT MUST COME OUT UNDER PART.

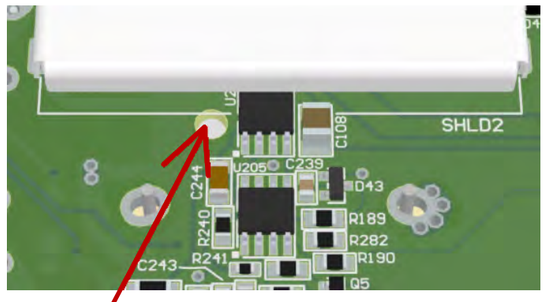

HAND SOLDER SHLD2 IN 4 PLACES

RTV HOLE FOR L204 - SEE NOTE 7.

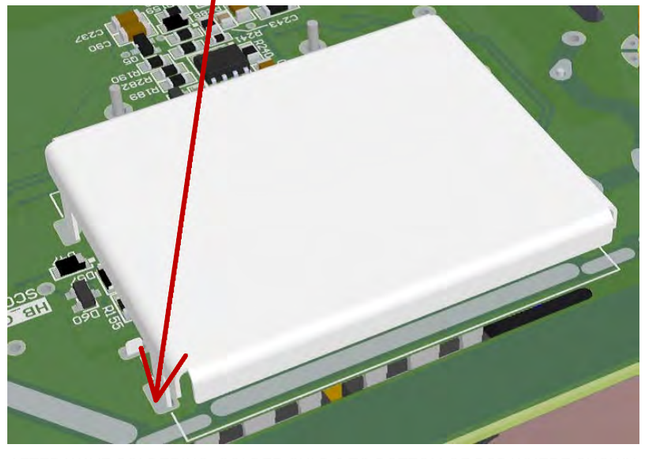

AFTER WAVE SOLDERING, SOLDER SHLD 2 TO BOTTOM OF PCB WHERE SHOWN

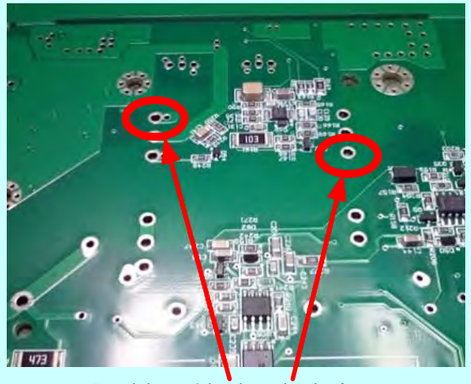

Bend these 2 leads on back of board after inserting T1 (YS# 1226)

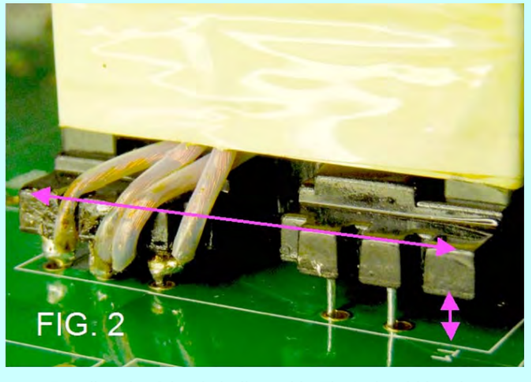

Bending the 2 leads indicated in Fig 1 should level the XFMR T1 as shown in Fig 2 above

PIC. 3

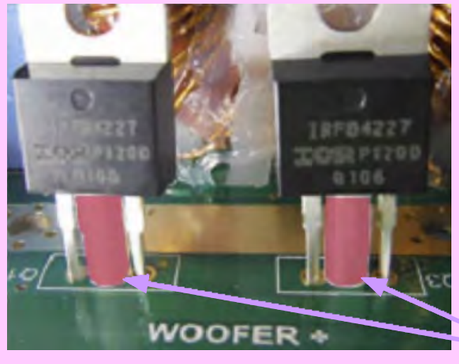

9067

ADD A #9067 SPACER TO THE MIDDLE LEG OF Q1, Q3, Q6, Q7, D203 AND D220

THIS SHEET CONTAINS SPECIAL PRODUCTION NOTES AND A LIST OF PCB HARDWARE PARTS REQUIRED FOR THE BUILD.

Yorkville	Section:	Assembly Documentation			
	Product(s):	PS12P-PS15P			
	PCB#: M1528	Rev#: V03	EML Rev#: XX	Sheet 7 Of 8	
	Modified: 2017-11-16	File: Assembly.SchDoc		Tmp Rev: TemplateRev	

DESIGN HISTORY AND INFORMATION

CHANGE HISTORY

#	DATE	VER#	PC#	DESCRIPTION OF CHANGE
1	02-JUN-2016	V01	.	RELEASED FOR PRODUCTION
2	26-JUL-2016	.	8885	UPDATED SYMBOL FOR IRS20957S
3	16-SEP-2016	.	8965	ADDED PRE-ASSEMBLY PAGE FOR ADDITIONAL PROCESS NOTES
4	03-FEB-2017	V02	.	ADD VIAS TO REINFORCE HIGH CURRENT CONNECTED COMPONENTS
5	.	.	.	CHANGE THICKNESS OF BOARD TO 2MM
6	10-JUL-2017	.	.	REVISED NOTES FOR PRE-ASSEMBLY FOR PRE-SOLDERING LARGE COILS
7	.	.	.	REVISED NOTES FOR ADDING RTV POST-WAVE TO L204
8	16-NOV-2017	V03	9140	MOVE R46 TO TOP OF PCB AND ELONGATED COIL PADS
9	.	.	.	.
10	.	.	.	.
11	.	.	.	.
12	.	.	.	.
13	.	.	.	.

#	DATE	VER#	PC#	DESCRIPTION OF CHANGE
1	.	.	.	.
2	.	.	.	.
3	.	.	.	.
4	.	.	.	.
5	.	.	.	.
6	.	.	.	.
7	.	.	.	.
8	.	.	.	.
9	.	.	.	.
10	.	.	.	.
11	.	.	.	.
12	.	.	.	.
13	.	.	.	.

#	DATE	VER#	PC#	DESCRIPTION OF CHANGE
1	.	.	.	.
2	.	.	.	.
3	.	.	.	.
4	.	.	.	.
5	.	.	.	.
6	.	.	.	.
7	.	.	.	.
8	.	.	.	.
9	.	.	.	.
10	.	.	.	.
11	.	.	.	.
12	.	.	.	.
13	.	.	.	.

POTENTIOMETERS AND KNOBS

POTENTIOMETERS AND KNOBS			
REF	FUNCTION	POT#	KNOB#
.	.	.	.
.	.	.	.
.	.	.	.
.	.	.	.
.	.	.	.
.	.	.	.
.	.	.	.
.	.	.	.
.	.	.	.
.	.	.	.
.	.	.	.
.	.	.	.
.	.	.	.

PINOUT DIAGRAMS

THIS SHEET CONTAINS A CHANGE HISTORY LOG, A LIST OF THE POTS & KNOBS AND A LEADS & PINS REFERENCE SECTION.

Yorkville

Section:	Design Information And History				
Product(s):	PS12P-PS15P				
PCB#: M1528	Rev#: V03	EML Rev#: XX	Sheet 6 Of 6		
Modified: 2017-11-16	File: History.SchDoc		Tmp Rev: TemplateRev		

J1:2
FUNCTION
XLR-PHONE
4090
J1:1
FUNCTION
XLR-PHONE
4090
NCJ6FAV-0
+1/4
X2
X3
X1
SHLD
D16
SMAJ150CA
DO-214ACBI
J2
SG8
SPRKGAP
IGND
SG7
SPRKGAP
IGND
MIX-
MIX+
R2
W125
470R
0805
R3
W125
470R
0805
R1
W125
10K
0805
R4
W125
1M
0805
R5
W125
1M
0805
C1
0603
470P
50V
C2
0603
470P
50V
IGND
265V
IGND
R101
1543
48R
W5
CON_HOLE_125
CHGND
PSGND
GL1
CHGND
C3
100N 50V
0805
R6
W125
10K
0805
D1
4148
D1005
MC33078
7817
U1:1
SO8
R8
W125
1K800
0805
R10
W125
1K02
0805
C5
2N7 100V
0805
D9
CLIP
MC33078
7817
U2:2
SO8
R20
W125
10K
0805
GND
C8
22U 25V
1210
R12
W100
4K99
0805
AIN_HI_SENS
Vfs = 0.7Vrms = 1.98Vpp
To ADC on ADAU1701
Vfs rms = 0.1mA * (R + 2k)
C7
22U 25V
1210
R14
W125
100K
0805
AIN_LO_SENS
Vfs = 10.2Vrms = 28.8Vpp
MC33078
7817
U2:1
SO8
C6
2N7 100V
0805
R11
W125
1K02
0805
GND
D2
4148
D1005
MC33078
7817
U1:2
SO8
R9
W125
1K800
0805
R7
W125
10K
0805
C4
100N 50V
0805
+15V
MC33078
100N 50V
7817
U1:3
SO8
C20
0805
-15V
C19
100N 50V
0805
GND
+15V
MC33078
100N 50V
7817
U2:3
SO8
C22
0805
C21
0805
100N 50V
-15V
GND
C58
15N 50V
0805
R23
W125
1K800
0805
U9:2
MC33079D
7668
SO14
IOUTL-
WOOFER+
W1 PIN 5
AGND
C57
15N 50V
0805
R25
W125
1K800
0805
WOOFER OUTPUT
U9:1
MC33079D
7668
SO14
IOUTL+
WOOFER-
W1 PIN 4
AGND
C39
50V 100N
0805
R30
W100
2K0
0805
DGND
AGND
C26
1N5 50V
0805
R26
W125
1K800
0805
U9:4
MC33079D
7668
SO14
IOUTR-
HORN-
W1 PIN 5
AGND
C56
1N5 50V
0805
HORN OUTPUT
R29
W125
1K800
0805
U9:3
MC33079D
7668
SO14
IOUTR+
HORN
W1 PIN 4
AGND
C65
47P 50V
0805
SYNC
R102
W125
2K2
0805
DGND
VDDINT TO DSP
+3V3
C35
10N 50V
1206
+15V
R103
W125
47R
0805
C72
35V
6032
15U
U6
LM2671
7890
SO8
VIN
ON/OFF
SS
SYNC
FB
GND
VSW
CB
L1
120uH
2910
SWS/CR75
D6
C36
10V
3528
100U
DGND
LOW VOLTAGE
SUPPLY
+15V
R68
W100
39R
0805
U9:5
7668
MC33079D
SO14
V+
V-
C24
0805
100N
50V
C38
0805
100N 50V
R69
W100
39R
0805
-15V
DGND

Product	PS Preamp		
ANALOG.SCHDOC	PCB# M1529	Sheet 1 of 4	
Date: 2016-12-07	Rev:1.00	YsType:*	
Filename: ANALOG.SCHDOC			

Yorkville

LINE GAIN

MIC GAIN

Product	PS Preamp		
MIXER.SCHDOC	PCB# M1529	Sheet 2 of 4	
Date: 2016-12-07	Rev:V01	YsType:*	
Filename: MIXER.SCHDOC			

Yorkville

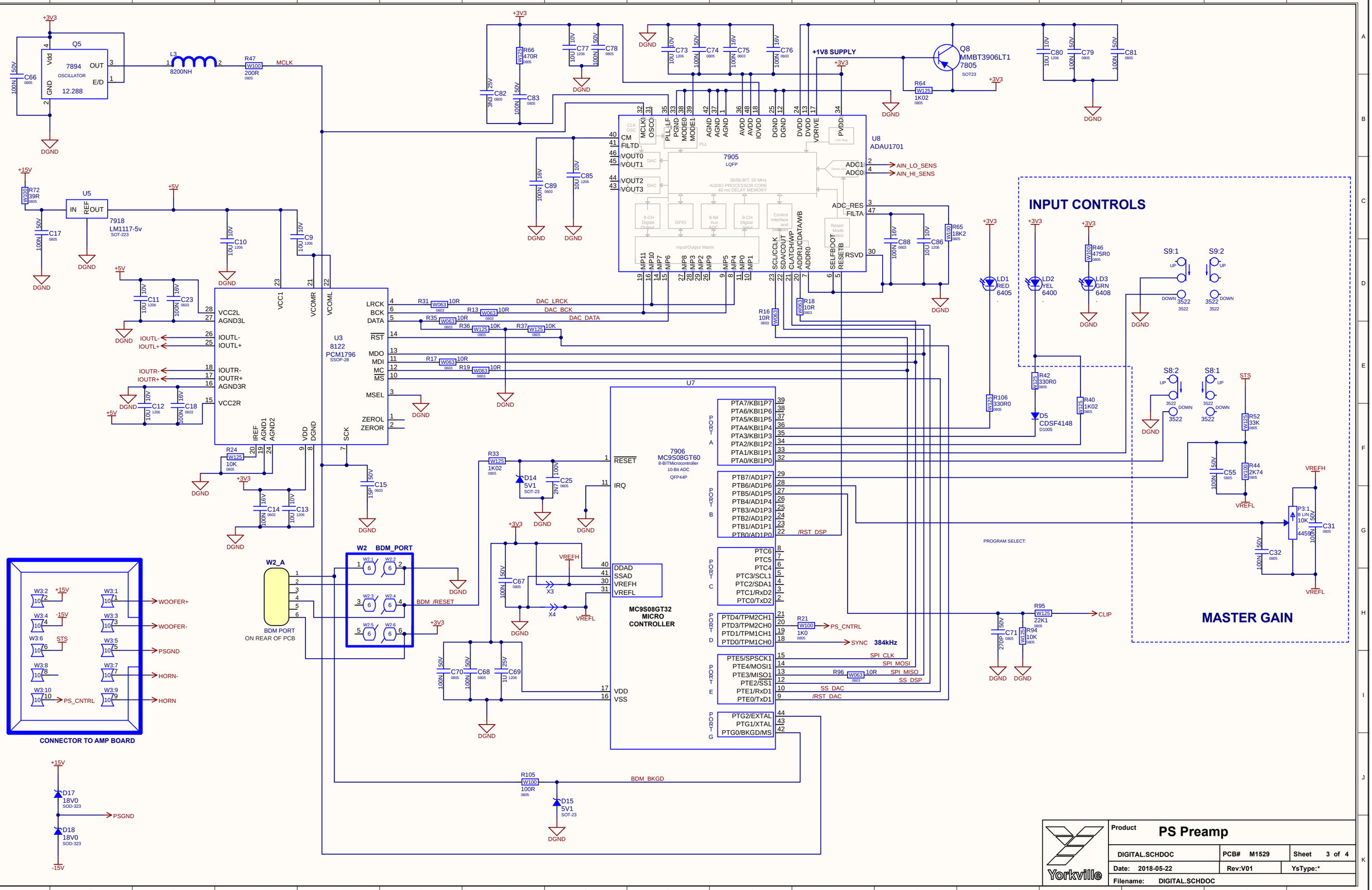

INPUT CONTROLS
MASTER GAIN
CONNECTOR TO AMP BOARD
W2 BDM_PORT
BDM PORT
ON REAR OF PCB
U3
8122
PCM1796
SSOP-28
U7
7906
MC9S08GT60
8-BITMicrocontroller
10-Bit ADC
QFP44P
MC9S08GT32
MICRO
CONTROLLER
U8
ADAU1701
7905
LQFP
Q5
7894
OSCILLATOR
12.288
Q8
MMBT3906LT1
7805
SOT23
U5
7918
LM1117-5v
SOT-223
+1V8 SUPPLY
AIN_LO_SENS
AIN_HI_SENS
DAC_LRCK
DAC_BCK
DAC_DATA
IOUTL-
IOUTL+
IOUTR-
IOUTR+
MCLK
BDM_/RESET
BDM_BKGD
PS_CNTRL
SYNC
384kHz
SPI_CLK
SPI_MOSI
SPI_MISO
SS_DSP
SS_DAC
/RST_DAC
/RST_DSP
PROGRAM SELECT:
CLIP
VREFH
VREFL
STS
WOOFER+
WOOFER-
PSGND
HORN-
HORN
D17
18V0
SOD-323
D18
18V0
SOD-323
D14
5V1
SOT-23
D15
5V1
SOT-23
D5
CDSF4148
D1005
LD1
RED
6405
LD2
YEL
6400
LD3
GRN
6408
S9:1
S9:2
S8:2
S8:1
P3:1
B LIN
10K
4459
Yorkville
Product
PS Preamp
DIGITAL.SCHDOC
PCB# M1529
Sheet 3 of 4
Date: 2018-05-22
Rev:V01
YsType:*
Filename: DIGITAL.SCHDOC

DESIGN HISTORY AND INFORMATION

CHANGE HISTORY

#	DATE	VER#	PC#	DESCRIPTION OF CHANGE
1	02-JUN-2016	V01	.	RELEASED FOR PRODUCTION
2	22-MAY-2018	V01	9211	REPLACE R105 (1K02 - 0805 YS# 7898) WITH YS# 7624 (100R - 0805)
3	.	.	.	.
4	.	.	.	.
5	.	.	.	.
6	.	.	.	.
7	.	.	.	.
8	.	.	.	.
9	.	.	.	.
10	.	.	.	.
11	.	.	.	.
12	.	.	.	.
13	.	.	.	.

#	DATE	VER#	PC#	DESCRIPTION OF CHANGE
1	.	.	.	.
2	.	.	.	.
3	.	.	.	.
4	.	.	.	.
5	.	.	.	.
6	.	.	.	.
7	.	.	.	.
8	.	.	.	.
9	.	.	.	.
10	.	.	.	.
11	.	.	.	.
12	.	.	.	.
13	.	.	.	.

POTENTIOMETERS AND KNOBS

POTENTIOMETERS/SWITCHES AND KNOBS				
REF	FUNCTION	POT/SW YS#	STYLE	KNOB#
P1	Line Level	4459	P32	8653
P2	Mic Level	4459	P32	8653
P3	Master Level	4459	P32	8653
.	.	.	.	.
.	.	.	.	.
.	.	.	.	.
.	.	.	.	.
.	.	.	.	.
.	.	.	.	.
.	.	.	.	.
.	.	.	.	.
.	.	.	.	.
.	.	.	.	.

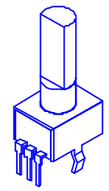

"STYLE_P32"

PINOUT DIAGRAMS

THIS SHEET CONTAINS A CHANGE HISTORY LOG, A LIST OF THE POTS & KNOBS AND A LEADS & PINS REFERENCE SECTION.

Yorkville

Section: Design Information And History
Product(s): PS10/PS12/PS15P
PCB#: M1529 | Rev#: V01 | EML Rev#: 01 | Sheet 1 Of *
Modified: 2018-05-22 | File: History.SchDoc | Tmp Rev: TemplateRev

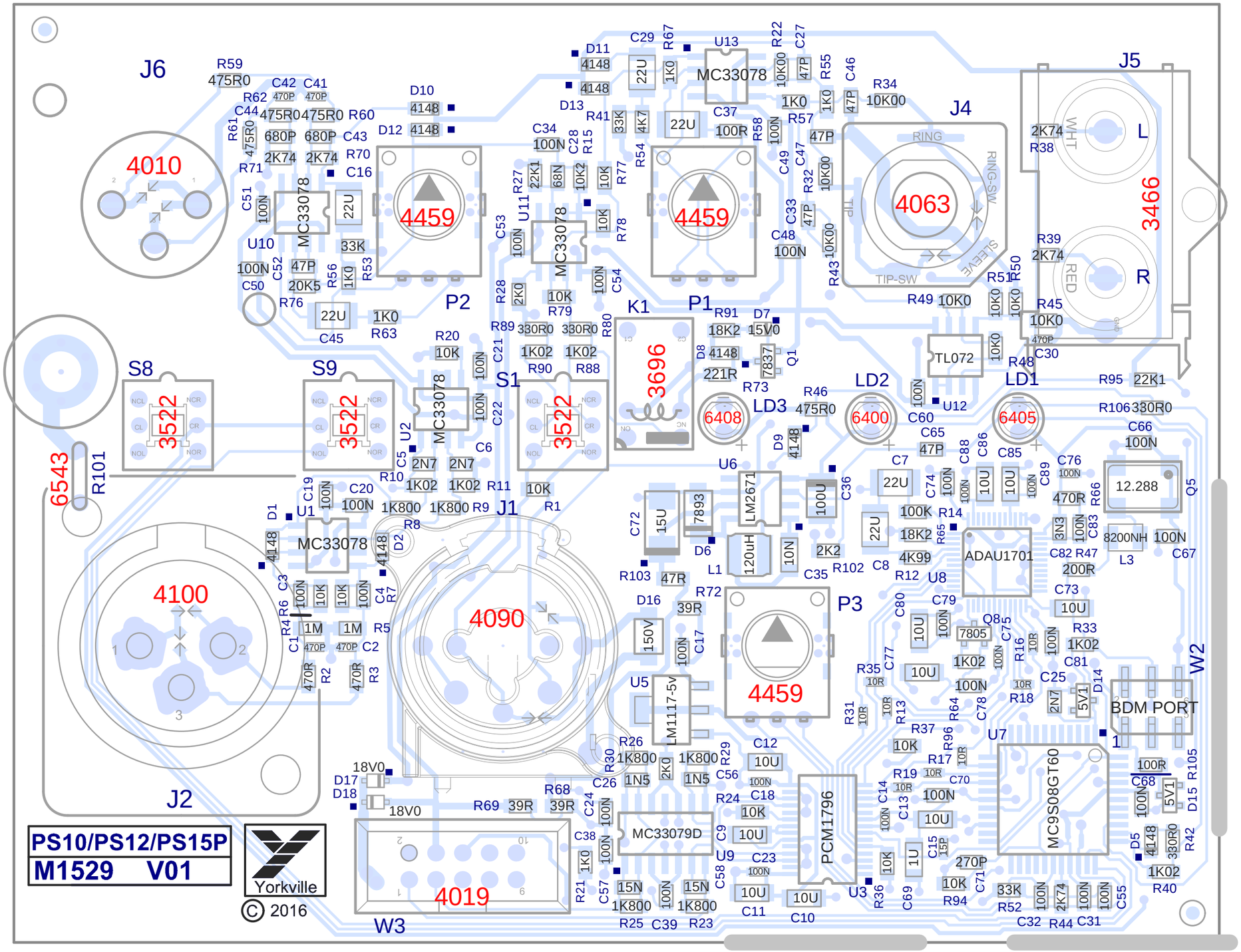

SEE LAYOUT DOCUMENTATION

PCB ASSEMBLY DOCUMENTATION

SPECIAL PRODUCTION NOTES

1. KEEP ALL CONNECTORS FLUSH MOUNTED AND STRAIGHT WITH A JIG DURING WAVE SOLDERING.

2. ADD 0.9" LED SPACER (YS#4007) to LD1, LD2 and LD3.

3. DO NOT STUFF COMPONENTS MARKED WITH DNS. IN THE LAYOUT PADS WITH

4. BEFORE TRANSPORTING TO WIRING PLEASE SEPARATE BOARD FROM PANEL USING PIZZA CUTTER SO SMT COMPONENTS ARE NOT STRESSED.

PCB HARDWARE

Section: Assembly Documentation			
Product(s): PS10/PS12/PS15P			
PCB#: M1529	Rev#: V01	EML Rev#: 01	Sheet 1 Of *
Modified: 2018-05-22	File: Assembly.SchDoc		Tmp Rev: TemplateRev

DESIGN HISTORY AND INFORMATION

CHANGE HISTORY

#	DATE	VER#	PC#	DESCRIPTION OF CHANGE
1	02-JUN-2016	V01	.	RELEASED FOR PRODUCTION
2	22-MAY-2018	V01	9211	REPLACE R105 (1K02 - 0805 YS# 7898) WITH YS# 7624 (100R - 0805)
3	.	.	.	.
4	.	.	.	.
5	.	.	.	.
6	.	.	.	.
7	.	.	.	.
8	.	.	.	.
9	.	.	.	.
10	.	.	.	.
11	.	.	.	.
12	.	.	.	.
13	.	.	.	.

#	DATE	VER#	PC#	DESCRIPTION OF CHANGE
1	.	.	.	.
2	.	.	.	.
3	.	.	.	.
4	.	.	.	.
5	.	.	.	.
6	.	.	.	.
7	.	.	.	.
8	.	.	.	.
9	.	.	.	.
10	.	.	.	.
11	.	.	.	.
12	.	.	.	.
13	.	.	.	.

POTENTIOMETERS AND KNOBS

POTENTIOMETERS/SWITCHES AND KNOBS				
REF	FUNCTION	POT/SW YS#	STYLE	KNOB#
P1	Line Level	4459	P32	8653
P2	Mic Level	4459	P32	8653
P3	Master Level	4459	P32	8653
.	.	.	.	.
.	.	.	.	.
.	.	.	.	.
.	.	.	.	.
.	.	.	.	.
.	.	.	.	.
.	.	.	.	.
.	.	.	.	.
.	.	.	.	.
.	.	.	.	.

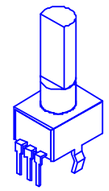

"STYLE_P32"

PINOUT DIAGRAMS

THIS SHEET CONTAINS A CHANGE HISTORY LOG, A LIST OF THE POTS & KNOBS AND A LEADS & PINS REFERENCE SECTION.

Yorkville

Section: Design Information And History
Product(s): PS10/PS12/PS15P
PCB#: M1529 | Rev#: V01 | EML Rev#: 01 | Sheet 1 Of *
Modified: 2018-05-22 | File: History.SchDoc | Tmp Rev: TemplateRev