


PreSonus CONTRACTOR

# StudioLive™ 24.4.2

**24-input digital mixer / FireWire interface for live performance and recording**

- 24 mic/line channel inputs with 100 mm faders and insert sends/returns
- 25 Class A XMAX™ solid-state mic preamplifiers (24 ch. + Talkback)
- 4 subgroups and 10 auxiliary buses (pre/post-fader send)
- 2 stereo 32-bit floating point digital effects processors
- Fat Channel signal processing on all channels and buses, with high-pass filter, 4-band fully parametric EQ, compressor, gate, and limiter
- Four dual-mono, 31-band graphic EQs that are assignable to the subgroups, aux sends, and main bus
- 32-in/26-out FireWire recording interface (24-bit/44.1 kHz and 48 kHz)
- Scene and individual settings store and recall
- Bundle for Mac® and Windows® includes PreSonus Studio One™ Artist DAW, Capture™ live-recording software, Virtual StudioLive™ bidirectional mixer-control software
- Free StudioLive Remote iPad® wireless-control software and QMix™ iPhone®/iPod touch® wireless aux-control software available from the Apple App Store.
- Daisy-chain 2 StudioLive 24.4.2s for 48x8x2 (or 48x4x2, selectable) live mixing (no recording)

The PreSonus StudioLive™ 24.4.2 is a 24-channel (24x4x2) digital mixer that is designed for live events, live and studio recording, and corporate, institutional, and other installations.

Each channel features an XLR mic input and high-headroom Class A XMAX™ mic preamp, individually switched 48V phantom power, ¼" balanced line input, and insert point. Channel, subgroup, and main levels are set with 100 mm faders. The StudioLive 24.4.2 has ten aux buses, four subgroups, a talkback section with Class A XMAX preamp, extensive LED metering, mixer Scene save and recall, and channel-strip save/recall/copy/paste. Four dual-mono, 31-band, graphic EQs are available and are assignable in pairs to the Subgroups, Aux Sends, and Main output bus. Every channel and subgroup has Solo and Mute buttons, the two FX buses have Mute buttons, and the Aux buses have Solo buttons. A Solo-in-Place (SIP) button is provided, and the Cue bus is switchable between AFL and PFL. The Solo and Main bus, Tape Input, and Main FireWire return can be monitored via the Control Room Outputs.

All buttons on the mixing surface glow gently when inactive and brightly when selected for easy viewing in low-light conditions. The mixer also offers a 12 VDC, BNC lamp socket.

Main outputs are on both XLR and balanced ¼" jacks, and a full-range XLR Mono output is provided. All Main Outputs can be used at the same time and are controlled by the Main bus fader. The levels for the XLR Mono output and the stereo XLR and TRS outputs can be adjusted using two volume pots on the back panel. The signal can be attenuated to -40 dB and boosted up to +10 dB. The subgroup, aux send, and control room outputs are balanced ¼" jacks, as are the two stereo Aux returns. The stereo tape sends and returns use RCA jacks. Pre-insert, analog direct outputs are provided on DB25 connectors. A stereo coax S/PDIF digital output is included.

The mixer incorporates a built-in 32x26 FireWire recording/playback interface and has two FireWire 400 (IEEE 1394) ports. In addition to providing computer connectivity, the ports permit pass-through for connecting a hard drive, and they allow up to 2 StudioLive 24.4.2s to be daisy-chained, providing a 48x8x2 or 48x4x2 (selectable) mixer for live mixing without recording.

The StudioLive 24.4.2's Fat Channel™ processing section offers a 4-band fully parametric EQ with switchable shelving on the low and high bands, individual band on/off switches, and global EQ on/off; full-featured compressor; limiter with variable threshold; and expander/gate with Key Listen and Key Filter on every channel, aux, and subgroup. The Fat Channel also provides a high-pass filter on each channel, aux, and effects bus.

*text continued on page 4*

## RESOURCES

**To obtain these documents, please go to the following Web page and click on the Downloads tab:**

www.presonus.com/products/Detail.aspx?ProductId=59

**This data sheet:** PreSonus_StudioLive_24.4.2.pdf
**CAD drawings:** PreSonus_StudioLive_24.4.2.dxf
**A&E Specs:** PreSonus_StudioLive_24.4.2_AE.doc
**Color brochure:** PreSonus_Mixer_Brochure.pdf

## RELATED PRESONUS PRODUCTS

StudioLive Linking Adapter
StudioLive 16.4.2 Dustcover
StudioLive 16.0.2 Digital Mixer
StudioLive 24.4.2 Digital Mixer



StudioLive™ 24.4.2

## The StudioLive Software Library ships free with the StudioLive 24.4.2!

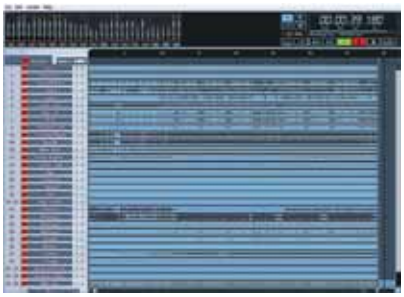

### Capture™ Multitrack Recording

- Up to 34x34 multitrack recording application
- Record with two mouse clicks
- Essential editing suite (copy, cut, paste, splice, resize)
- Peak LED-style meter bridge with clip indicators
- Marker placement and recall
- Export between markers
- Record stereo mix of StudioLive mixer
- Full transport control
- Import/export individual WAV or OpenTL files
- Mac®- and Windows®-compatible



### Virtual StudioLive™ Remote Control

- Remote control of all main StudioLive 24.4.2 mixer functions via FireWire-connected computer
- Easy drag-and-drop workflow
- Drag presets directly to channels
- Drag parts of presets directly to components in the Fat Channel
- Adjust the Fat Channel gate, compressor, and EQ, plus the graphic EQs and effects, in a huge pop-up window
- Quickly drop entire Scenes to the mixer for instant recall of all channel, effects, and graphic EQ settings
- Load effects quickly by simply dragging presets into the GUI
- Use the mouse to quickly assign channels to multiple buses, mute, solo, etc.
- Timestamp backups of the entire board
- Copy and load channels, copy main mix to aux mix (and aux to aux), link channel faders so that they move together
- Remote-control VSL wirelessly using Apple iPad®, iPhone®, and iPod touch®
- Set permissions for iOS devices



### Studio One™ Artist 2 DAW

- Elegant single-window work environment
- Powerful drag-and-drop functionality
- Unlimited audio tracks, MIDI tracks, virtual instruments, buses, and FX channels
- Content browser with convenient sort options and preview player
- Most intuitive MIDI-mapping system available
- Real-time audio time-stretching and resampling
- Multitrack comping and MIDI editing
- Transient detection and editing and groove extraction
- Automatic delay compensation
- Advanced automation
- Integrates tightly with Celemony Melodyne
- Instantly configures to PreSonus interfaces
- Compatible with ASIO-, Windows Audio-, and Core Audio-compliant interfaces
- 26 Native Effects™ 32-bit effects and virtual instrument plug-ins
- 10+ GB of third-party software, loops, and instruments
- Mac®- and Windows®-compatible

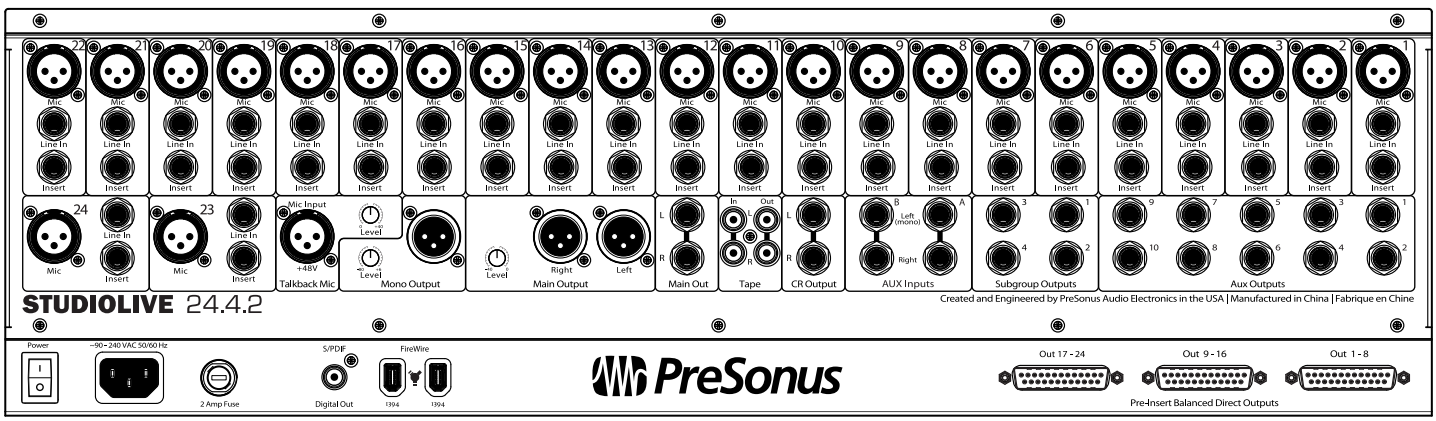

StudioLive™ 24.4.2

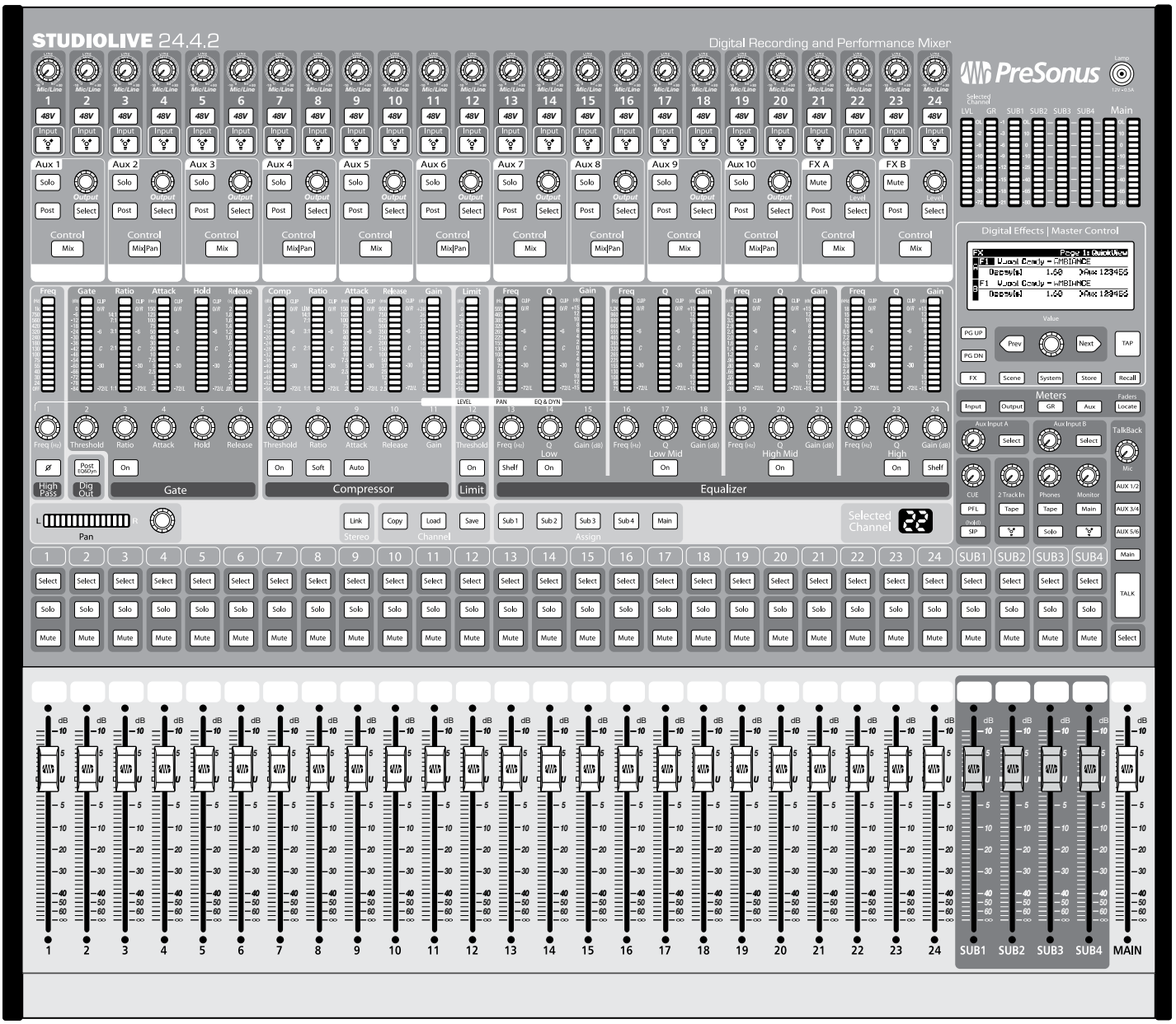

In addition, the Fat Channel provides panning, subgroup and main assigns; sends to each aux and effects bus; and phase reverse for each channel. The Fat Channel's 16-segment, multipurpose LED meters offer 4 modes for visually monitoring the levels of all 24 inputs: post-gain and pre-dynamics and pre-fader; post-dynamics and post-fader; the amount of gain reduction; or the fader settings for a saved Scene. These meters can also be used to display the output volume of each of the 10 Aux Sends and FX buses as well as the boost/cut for each band of the graphic EQ. Channels can be linked in stereo as odd-even pairs (Ch. 1-2, 3-4, etc.), and a horizontal LED Pan meter displays the pan position for the selected channel or linked channels. The Fat Channel can be inserted anywhere there is a blue Select button; when a Select button is fully lighted, the Fat Channel is active on that channel, aux, etc.

Time-based effects such as delay and reverb are delivered by two stereo, 32-bit floating point effects processors, which are assigned to dedicated effects buses and come with 50 user-editable factory presets and 49 empty locations for user-created presets. An LCD display gives access to the effects parameters, graphic EQ, Scene store/recall, channel strip store/recall, and system settings.

In addition to the multifunction meters in the Fat Channel, the StudioLive 24.4.2 has a main metering section featuring 15-segment LED meters that display the levels of the currently selected channel or bus, the four Subgroups, and the Left and Right channels of the Main bus. This section features the same metering modes as the Fat Channel: pre-dynamics and pre-fader, post-dynamics and post-fader, the amount of gain reduction applied to each subgroup and the Main bus, or the fader settings for a saved Scene. In addition, the main meter section offers a dedicated Gain Reduction meter for the currently selected channel.

The StudioLive 24.4.2 operates on 100-240 VAC and employs a standard IEC power connector.

Bundled software includes PreSonus Capture™ multitrack audio-recording application (primarily intended for recording live events), PreSonus Studio One™ Artist digital audio workstation (for audio and MIDI production), and PreSonus Virtual StudioLive™ (VSL) bidirectional mixer-control application, which provides preset- and Scene-management features and enables real-time adjustment of the most commonly used mixer settings.

In addition, VSL enables the user to copy and load channels, copy Main mix to Aux mix (and Aux to Aux), and link channel faders so that they can move together. VSL can optionally make the StudioLive mixer default to Fader Locate Mode once a fader has been adjusted using either VSL or StudioLive Remote for iPad (described next).

The StudioLive 24.4.2 can be controlled wirelessly by networking, via Wi-Fi, an Apple iPad® running PreSonus' StudioLive Remote app with a computer, running VSL, that is connected to the StudioLive mixer via FireWire. This enables the iPad to control VSL, and in turn, the StudioLive mixer. The Tap Tempo feature for the StudioLive's time-based effects can be controlled both from VSL and from StudioLive Remote.

Any Aux bus can be wirelessly controlled from an Apple iPhone® or iPod touch® that is running PreSonus' QMix™ app. As with StudioLive Remote, the iPhone/iPod touch must be networked via Wi-Fi to the FireWire-connected computer running VSL. Aux buses can be named in VSL or in QMix, and the names will appear in both programs.

Permissions can be set in VSL so that each networked iPad can only control front-of-house mixer features or a specified aux and so that each iPhone/iPod touch can only control a specified aux—or is ignored entirely.

StudioLive Remote and QMix are free from the Apple App Store.

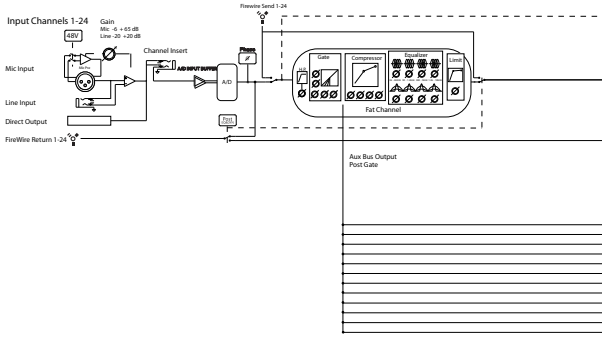


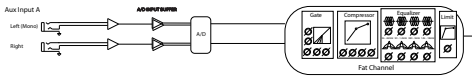


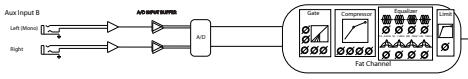


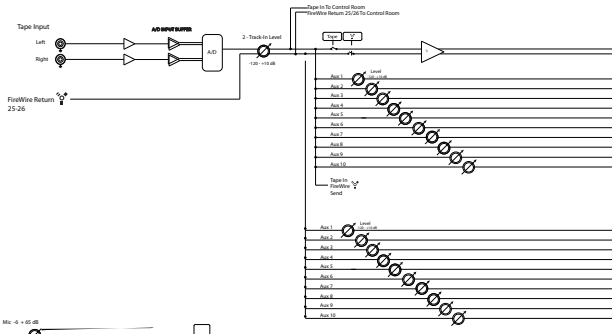


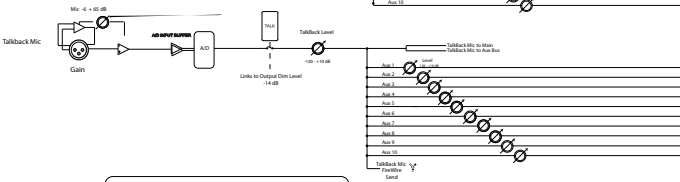


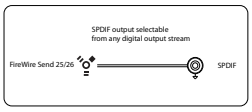

StudioLive™
24.4.2

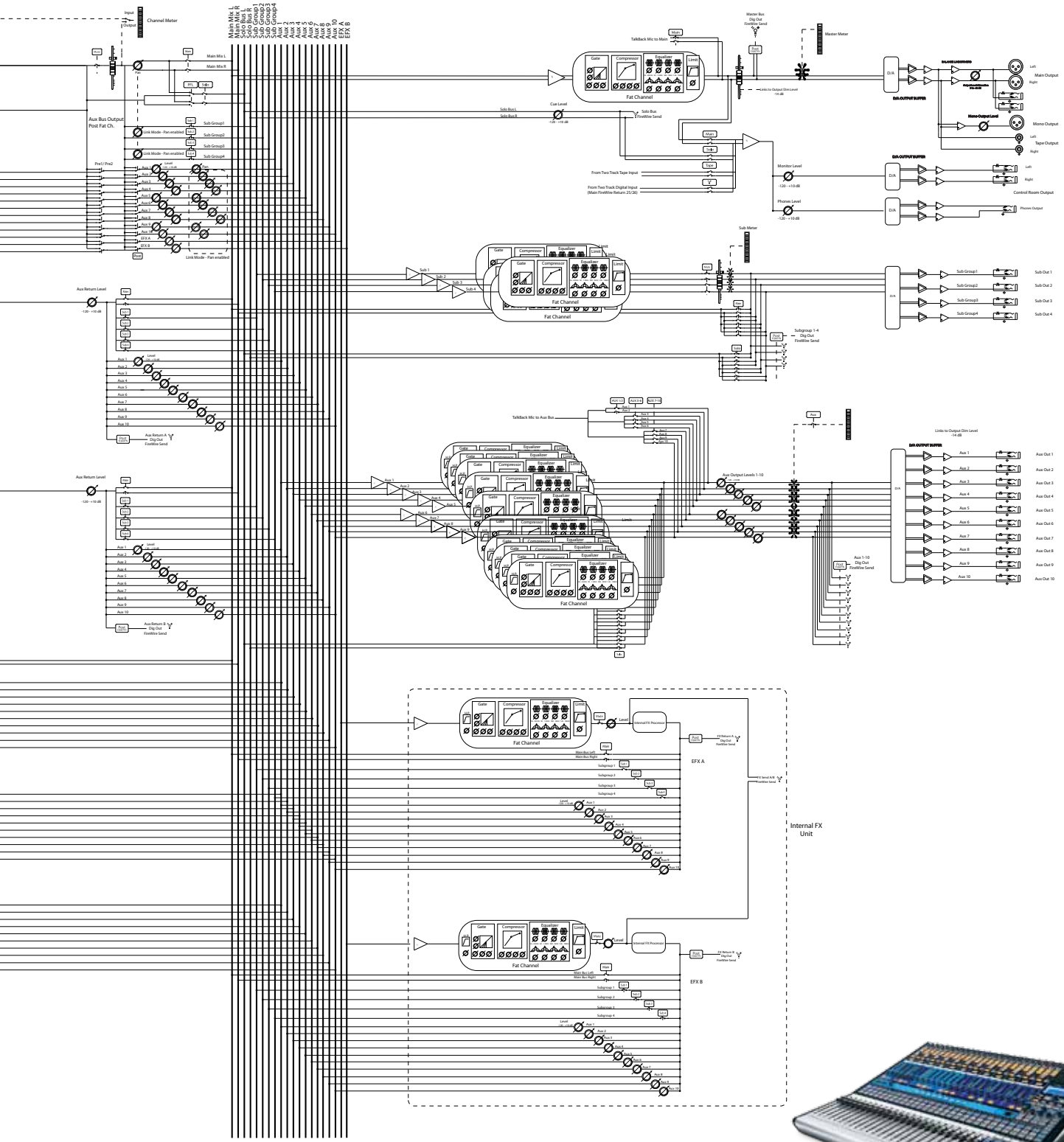




# StudioLive 24.4.2 Architect & Engineering Specifications

**Also available as a Word document:**

**PreSonus_StudioLive_24.4.2_AE.doc**

## 1. GENERAL CONFIGURATION.

The mixer shall be a digital mixer and shall accommodate 24 line and/or 24 microphone signals, Channels 1–24; and shall include 24 analog Send/Return channel Inserts; 24 channel Direct Outputs; 2 stereo pairs of Aux Return inputs; 2 stereo pairs of Main mix outputs; 1 Main mix Mono output, 1 stereo pair of Control Room outputs; 4 Subgroup outputs; 10 Aux Send outputs; 1 stereo pair of RCA-type phono Tape outputs; 1 stereo Headphones output; 1 stereo S/PDIF coaxial digital output; and two FireWire 400 ports that can connect to a Mac or Windows PC for recording and control and to act as a pass-through for attaching an external storage drive. The mixer shall be capable of placement on a table and shall be fitted with 1 rocker-type Power switch; 1 3-pin IEC power receptacle that accepts 100-240 VAC, with user-replaceable, socketed 2A fuse; 1 BNC socket, providing 12 VDC at 0.5A for fitting an external lamp (not included); and shall be entirely self-contained.

## 2. MIXER INPUTS.

CHANNELS 1–24: Each channel shall include an electrically balanced, mono microphone input, using an XLR-3-F-type connector, providing gain from -30 to +16 dBu via a rotary Trim control. Each channel shall include one XMAX™ Class A solid-state microphone preamplifier. Phantom power shall be individually enabled/disabled for each channel via a button-type switch. Twenty-four balanced line inputs shall be wired using ¼" TRS phone jacks and shall accept nominal levels from -10 dBV to +4 dBu and maximum input levels of +22 dBu. Each channel shall include a pre-fader Insert point, using ¼" TRS phone jacks (tip=send, ring=return, sleeve=ground), delivering and accepting nominal levels from -10 dBV to +4 dBu and maximum input levels of +18 dBu. In addition, each channel shall accept an input signal from the FireWire 400 bus. The input of each channel shall be switchable between the analog inputs and the FireWire input, using a button-type switch. Each channel and Subgroup shall have a Solo switch and a Mute switch. Each channel shall have a dedicated, 100 mm level-control fader with marked increments at ∞, -60, -50, -40, -30, -30, -20, -10, -5, 0, +5, and +10 dB.

## 3. MIXER OUTPUTS.

MAIN OUTPUTS: The mixer's Main mix-bus stereo outputs shall be fitted in three ways: Using balanced XLR jacks, delivering a maximum output of +24 dBu, with an output impedance of 100Ω; using balanced ¼" TRS phone jacks, delivering a maximum output of +24 dBu; and using unbalanced RCA-type phono jacks (labeled Tape Out), delivering nominal levels from -10 dBV to +4 dBu. Output level for both the XLR and TRS Main mix-bus outputs shall be controllable using a single rear-panel knob. The Main mix-bus Mono output shall be fitted with one balanced XLR jack, delivering nominal levels from -10 dBV to +4 dBu, and with an output impedance of 100Ω; and it shall include a rear-panel rotary level control.

OTHER OUTPUTS: Channels 1-24 shall include pre-insert, balanced, analog Direct Outputs, using three sub-DB25 jacks (channels 1-8, 9-16, and 17-24), delivering nominal levels from -10 dBV to +4 dBu. The mixer shall include 4 Subgroup outputs, using balanced ¼" TRS phone jacks, delivering a maximum output level of +18 dBu and nominal levels from -10 dBV to +4 dBu, with an output impedance of 100Ω; 1 stereo pair of Control Room outputs, using balanced ¼" TRS phone jacks, delivering a maximum output level of +18 dBu and nominal levels from -10 dBV to +4 dBu, with an output impedance of 100Ω; 10 Aux Send outputs using balanced ¼" TRS phone jacks, delivering a maximum output level of +18 dBu and nominal levels from -10 dBV to +4 dBu, with an output impedance of 100Ω; and 1 stereo Headphones output, using an unbalanced ¼" TRS phone jack (tip=left, ring=right, sleeve=ground), and with a maximum output level of 150 mW.

## 4. MIXER INPUT SECTION.

In addition to the controls listed in section 2 (MIXER INPUTS), the mixer shall include 10 sets of Aux Send controls, each of which shall have a pre/post switch, a Solo switch, an Output level control that employs a rotary encoder, and a Select switch for controlling the Fat Channel processing section for the selected Aux Send.

## 5. DYNAMICS PROCESSING, PARAMETRIC EQ, AND BUS ASSIGNMENT.

All input channels, Aux Sends, Subgroups, and the Main Bus shall be routed to a section called the "Fat Channel" when their associated Select buttons are pressed. The Fat Channel shall provide the following digital signal-processing: High-pass Filter and Phase Reverse (input channels only), switchable Gate/Expander, Compressor, Limiter, Pan, and four-band fully parametric equalizer (EQ).

The Gate/Expander shall include Key Filter, Key Listen, Threshold, Range, Attack, and Release parameters. The Compressor shall have sweepable Threshold, Ratio, Attack, Release, and Gain; shall include an Auto Attack and Release feature; and shall be switchable between hard and soft knee. The Limiter shall have a sweepable Threshold.

The four-band parametric EQ shall be a second-order shelving filter. The Low band shall have a sweepable frequency from 36 Hz to 465 Hz, ±15 dB, and shall be switchable between shelf and peaking. The Low Mid band shall have a sweepable center frequency from 90 Hz to 1.2 kHz, ±15 dB. The High Mid EQ shall have a sweepable center frequency from 380 Hz to 5 kHz, ±15 dB. The High band shall have a sweepable frequency from 1.4 kHz to 18 kHz, ±15 dB, and shall be switchable between shelf and peaking. Each band shall have a sweepable Q ranging from 0.1 to 4 and shall be individually switchable on/off; a separate switch shall allow the entire parametric EQ to be enabled/disabled.

In addition, the Fat Channel shall enable signals to be assigned to the Subgroups and Main bus and shall enable adjacent odd-even channels (Channels 1/2, 3/4, etc.) to be linked in stereo. The Fat Channel also shall provide button switches that enable Channel settings to be copied, loaded, and saved to and from onboard memory.

## 6. MIXER OUTPUT SECTION.

The mixer shall have 1 stereo 100 mm fader for the Main bus, providing up to 10 dB gain, and 4 mono 100 mm Subgroup faders, each providing up to 10 dB gain. These 5 faders shall be marked at ∞, -60, -50, -40, -30, -30, -20, -10, -5, 0, +5, and +10 dB. The mixer shall have a Solo bus that shall include a rotary Cue Mix volume control; a button switch that shall toggle between After-Fader Listen (AFL) and Pre-Fader Listen (PFL); and a Solo-in-Place (SIP) mode, which shall be engaged using a button switch. The mixer shall have a Monitor bus that feeds the Control Room and Headphone outputs. The Headphone output level and Control Room output level shall be controllable with dedicated rotary encoders. The Tape Input, Solo bus, Main bus, and main L/R FireWire returns shall each be assignable to the Monitor bus using dedicated button-type switches. The mixer shall have a Talkback mic section that shall include a rotary level control; four buttons that assign the Talkback mic to Aux Sends 1-2, 3-6, and 7-10 and to the Main bus; and a latching Talkback (Talk) on/off button.

## 7. EFFECTS AND GRAPHIC EQ.

The mixer shall include two stereo, 32-bit effects processors and a library of effects presets that shall include time-based processing such as delay and reverb. The effects library and effects parameters shall be accessed using an FX button.

The mixer shall also include 4 dual-mono (8 channels), 31-band, 1/3-octave graphic equalizers with curve-fitting algorithm. The graphic EQs shall be assignable to the Main mix bus, the Subgroups, or the Aux Sends. Gain/attenuation shall be ±15 dB. A "GEQ" switch shall display the Graphic EQ menu on the LCD screen, providing fast access to the GEQ settings.

## 8. MEMORY AND GENERAL SETTINGS.

The mixer shall provide digital memory (storage) for the status of all digital mixer parameters but not for the status of the analog channel Trims.




The mixer shall enable storage of up to 80 Global Scenes, 99 channel-strip Presets, 99 FX presets, and 99 GEQ presets. The mixer shall permit settings to be copied between channels. Memory shall also be provided for effects settings. The mixer shall include a Digital Effects I Master Control section that includes an LCD display and controls that provide access to systems settings and the graphic equalizer and that enables store and recall of mixer Scenes and Fat Channel and effects settings. These controls shall include a rotary Value encoder, Previous and Next buttons, Page Up and Page Down buttons, an FX button for accessing the effects, and Scene, System, Store, and Recall buttons. This section also shall include a Tap button, the primary purpose of which is setting tempo for the delay effects described in Section 7 (EFFECTS AND GRAPHIC EQ).

## 9. AUDIO INTERFACE.

The mixer shall provide a built-in computer interface for recording and playing back audio. The interface shall enable 32 audio streams to be sent to a Mac or PC computer and 26 streams to be returned from the computer to the mixer via FireWire 400, as described in Section 1 (GENERAL CONFIGURATION) and Section 2 (MIXER INPUTS). The interface shall support digital audio with up to 24-bit depth and (selectable) 44.1 or 48 kHz sample rate.

## 10. METERING.

MAIN METERING: The mixer shall provide individual level meters for the left and right channels of the Main bus and for each of the four Subgroups; these 6 meters shall be 15-segment LED meters, each with labeled points at -60, -45, -30, -20, -10, 0, and +10 dB, with an additional point labeled "OL" (Overload). The Main and Subgroup meters shall be calibrated so that a 0 dBu signal at the Main or Subgroup output shall be indicated as 0 dB on the meters, ±1 dB. The mixer shall provide one 15-segment LED meter to display the level of the currently selected channel; this meter shall have labeled points at -72, -38, -24, -15, -10, -6, and -2 dB, with an additional point labeled "OL" (Overload). The mixer shall provide one 15-segment LED meter to display the Gain Reduction for the currently selected channel; this meter shall have labeled points at -21, -18, -15, -12, -9, -6, and -2 dB. Button switches shall be provided that turn PFL input metering on/off; turn post-fader output metering on/off; turn gain-reduction metering on/off; turn aux bus master out metering on/off, and turn fader-recall (Locate) metering on/off.

MULTIPURPOSE METERING: Multipurpose metering shall be provided in the Fat Channel section (described in Section 5, DYNAMICS PROCESSING, PARAMETRIC EQ, AND BUS ASSIGNMENT) that shall display the levels of all 24 inputs, post-gain and pre-dynamics, pre-EQ, and pre-fader; the levels of all 24 inputs, post-dynamics, post-EQ, and post-fader; the gain reduction for all 24 inputs; the output volume of each of the 10 Aux Sends; the gain levels for each band of any of the 31-band graphic EQs, or the fader settings for a saved Scene. A horizontal LED Pan meter shall be provided that shall display the pan position for the selected channel or linked channels.

## 11. BUNDLED SOFTWARE.

The mixer shall ship with at least three software packages for Mac and Windows computers. These packages shall include:

- A multitrack audio-recording application primarily intended for recording live events.
- A digital audio workstation application that enables recording, editing, and playback of both MIDI data and audio.
- A bidirectional mixer-control application that provides preset- and scene-management features, enables real-time adjustment of the most commonly used mixer settings, and sets permissions for optional iOS wireless-control apps.

The mixer shall also be wirelessly controllable from an Apple iPad, and its Aux buses shall be controllable from an Apple iPhone or iPod touch, using dedicated applications when networked via Wi-Fi (802.11) to a FireWire-connected computer running VSL.

## 12. PHYSICAL CONFIGURATION.

The mixer shall be made of steel, with an aluminum armrest, and shall be painted gray, silver, and blue with black and white graphics. The mixer shall weigh 51 lbs., 0 oz. (15.88 kg). Dimensions of the mixer shall be 22.35" (56.8 cm) in length, 25.5" (64.77 cm) in width, and 6.9" (17.53 cm) in depth.

## 13. SPECIFICATIONS.

13. SPECIFICATIONS. In addition to specifications already cited, the mixer shall meet or exceed the following specifications:

### Microphone Preamp

***Type***
XLR Female, balanced

***Frequency Response to Direct Output (at unity gain)***
20 Hz-40 kHz, 0 / -0.5 dBu

***Frequency Response to Main Output (at unity gain)***
20 Hz-20 kHz, ± 0.5 dBu

***Input Impedance***
1 kΩ

***THD to Direct Output (1 kHz at unity gain)***
0.005%, +4 dBu, 20 –20 kHz, unity gain, unwtd

***THD to Main Output (1 kHz at unity gain)***
0.005%, +4 dBu, 20 Hz-20 kHz, unity gain, unwtd

***EIN to Direct Output***
125 dB unwtd, +130 dB A-wtd

***S/N Ratio to Direct Output (Ref = +4 dB, 20 kHz BW, unity gain, A-wtd)***
97 dB

***S/N Ratio to Main Output (Ref = +4 dB, 20 kHz BW, unity gain, A-wtd)***
94 dB

***Common Mode Rejection Ratio (1 kHz at unity gain)***
65 dB

***Gain Control Range (±1 dB)***
16 dB to +67 dB

***Maximum Input Level (unity gain)***
16 dBu

***Phantom Power (±2 VDC)***
48 VDC

### Line Inputs

***Type***
¼" TRS Female, balanced mono

***Frequency Response to Direct Outputs (at unity gain)***
10-40 kHz, 0 / -0.5 dBu

***Frequency Response to Main Outputs (at unity gain)***
20 Hz-20 kHz, ± 0.5 dBu

***Input Impedance***
10 kΩ

***THD to Direct Output (1 kHz at unity gain)***
<0.0007%, +4 dBu, 20 Hz-20 kHz, unity gain, unwtd

***THD to Main Output (1 kHz at unity gain)***
<0.005%, +4 dBu, 20 Hz-20 kHz, unity gain, unwtd

***S/N Ratio to Direct Output (Ref = +4 dBu, 20 kHz BW, unity gain, A-wtd)***
105 dB

***S/N Ratio to Main Output (Ref = +4 dBu, 20 kHz BW, unity gain, A-wtd)***
94 dB

***Gain Control Range (±1 dB)***
20 dB to +20 dB

***Maximum Input level (unity gain)***
22 dBu

### Tape Inputs

***Type***
RCA Female, unbalanced (stereo pair)

***Maximum Input Level***
18 dBu

### Auxiliary Inputs

***Type***
¼" TRS Female, balanced (2 stereo pairs)

***Maximum Input Level***
18 dBu

### Main Outputs

***Type***
XLR Male, balanced (stereo pair); ¼" TRS Female, balanced (stereo pair); XLR Male, balanced (mono)

***Rated Output Level***
24 dBu

***Output Impedance***
100Ω

### Aux Outputs

***Type***
¼" TRS Female, balanced (mono)

***Rated Output Level***
18 dBu

***Output Impedance***
100Ω

### Subgroup Outputs

***Type***
¼" TRS Female, balanced (mono)

***Rated Output Level***
18 dBu

***Output Impedance***
100Ω

### Tape Outputs

***Type***
RCA Female, unbalanced (stereo pair)

***Rated Output Level***
18 dBu

***Output Impedance***
100Ω

### Control Room Outputs

***Type***
¼" TRS Female, balanced (stereo pair)

***Rated Output Level***
18 dBu

***Output Impedance***
100Ω

### System Crosstalk

***Input to Output (Ref = +4 dBu 20 Hz-20 kHz, unwtd)***
90 dB

***Adjacent Channels (Ref = +4 dBu 20 Hz-20 kHz, unwtd)***
87 dB

### Noise Gate / Expander

***Threshold Range***
-84 dB to 0 dB

***Attack Time***
0.2 to 500 ms

***Release Time***
0.05s to 2s

***Expander Attenuation Range***
2:1 (fixed)

***Noise Gate Attenuation Range***
2:1 (fixed)

***Key Filter***
2nd-order, resonant bypass; Q=0.7

***Key Listen***
Off to 16 kHz

StudioLive™ 24.4.2

### Compressor

***Threshold Range***
-56 dB to 0 dB

***Ratio***
1:1 to 14:1

***Attack Time***
0.2 ms to 150 ms

***Release Time***
2.5 ms to 900 ms

***Auto Attack and Release***
Attack = 10 ms, Release = 150 ms

***Curve Types***
hard and soft knee

### Limiter

***Threshold***
-28 dB to 0 dB

***Ratio***
∞:1

***Attack***
20 ms

***Hold***
10 ms

***Release***
20 ms

### Parametric EQ

***Type***
2nd order shelving filter

***Low (Lowpass or Bandpass)***
36 to 465 Hz, ±15 dB

***Low Mid (Bandpass)***
90 Hz to 1.2 kHz, ±15 dB

***High Mid (Bandpass)***
380 Hz to 5 kHz, ±15 dB

***High (Highpass or Bandpass)***
1.4 kHz to 18 kHz, ±15 dB

***Q (sweepable for each band)***
0.1 to 4

### Digital Audio

***ADC Dynamic Range (A-wtd, 48 kHz)***
118 dB

***DAC Dynamic Range (A-wtd, 48 kHz)***
118 dB

***FireWire***
S400, 400Mb/s

***Internal Processing***
32-bit, floating point

***Sampling Rate***
44.1, 48 kHz

***A/D/A Bit Depth***
24

***Reference Level for 0 dBFS***
18 dBu

### Clock

***Jitter***
20 ps rms (20 Hz-20 kHz)

***Jitter Attenuation***
60 dB (1 ns in, 1 ps out)

**The mixer shall be a PreSonus StudioLive 24.4.2.**

PreSonus™ CONTRACTOR



# StudioLive™ 24.4.2

**24-input digital mixer / FireWire interface for live performance and recording**

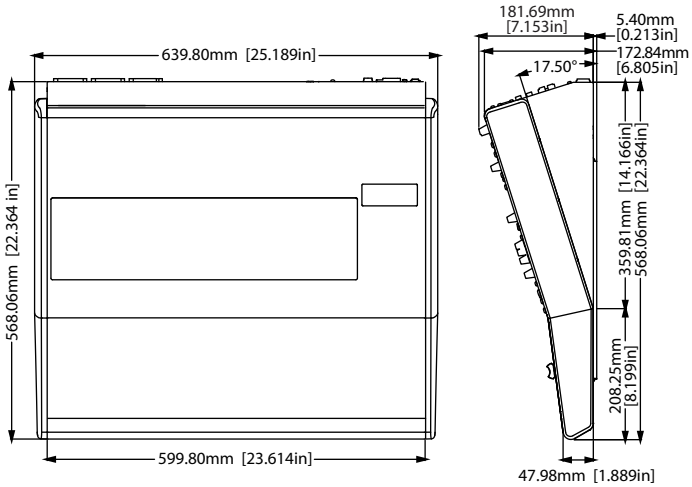


TOP VIEW RIGHT VIEW

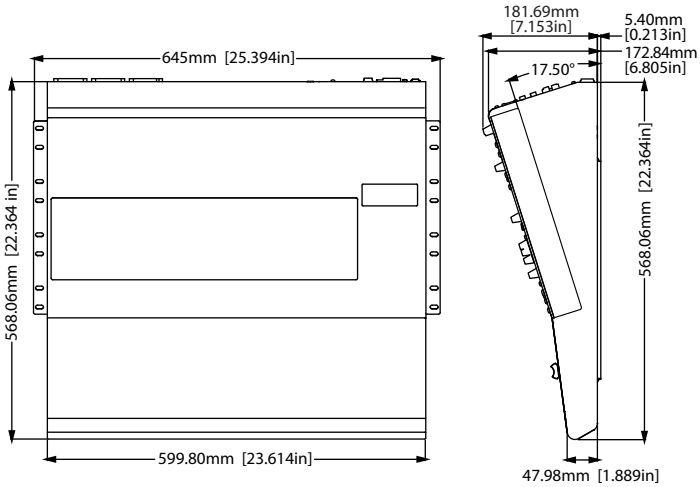


TOP VIEW RIGHT VIEW

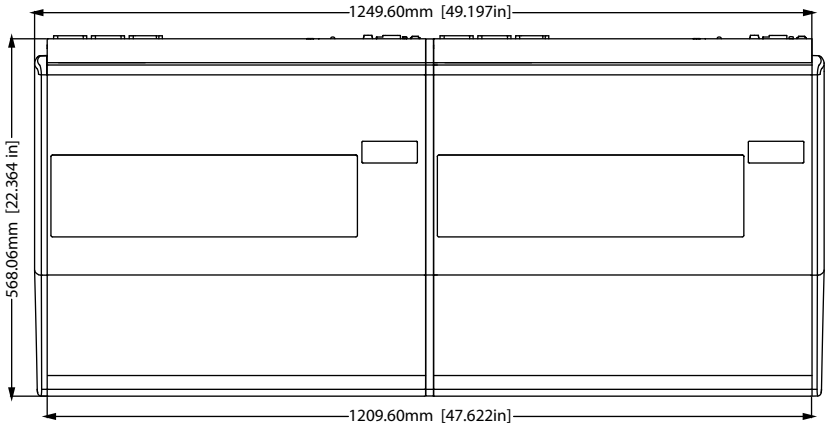


TOP VIEW

PreSonus™ CONTRACTOR


7257 Florida Blvd.
Baton Rouge, LA 70806
ph 225-216-7887
fax 225-926-8347
support@presonus.com
www.presonus.com



©2012 PreSonus Audio Electronics and PreSonus Software Ltd. All Rights Reserved. StudioLive, QMix, and XMAX are trademarks of PreSonus Audio Electronics. Capture and Studio One are trademarks of PreSonus Software Ltd. Windows is a registered trademark of Microsoft. Mac is a registered trademark of Apple, Inc. All specifications are subject to change.