ROCKVILLE



OWNER'S MANUAL

PPA20

RACK MOUNT PRE-AMPLIFIER

Thank you for purchasing this Rockville PPA20 Rack Mount Pre-Amplifier. We are very proud to bring you what we consider to be an extremely high quality professional pre-amplifier. Proudly conceived and developed in the USA, the Rockville PPA20 was designed and engineered by a team of music enthusiasts, DJ's and musicians. We have spared no expense in manufacturing this pre-amplifier to meet the highest quality standards. With proper care and installation this unit will provide you with the highest levels of performance and reliability.

Please read this installation guide carefully for proper use of your Rockville PPA20 Rack Mountable Pre-Amplifier. Should you need technical assistance please call our technical help line at 1-646-758-0144, Monday through Friday, 9am to 5pm EST.

IMPORTANT SAFETY INSTRUCTIONS



- To reduce risk of electric shock, never open the unit. There are no user serviceable parts, refer service to an authorized Rockville service center.
- Do not expose this unit to any kind of moisture.
- Please ensure that the unit is situated in a properly ventilated area.
- Make sure the unit is placed on a level and stable surface.

Features

- Rockville PPA20 Rack Mount Pre-Amplifier
- 1U Rack Size
- 1/4″ microphone input
- RCA PHONO input
- 5x RCA AUX inputs
- 1/4″ headphone output
- RCA REC / LINE outputs
- XLR master output (left, right)
- Headphone volume & Microphone volume controls
- 3 band EQ (Treble / Mid / Bass)
- Master volume
- L / R balance
- Input source switch
- AUX4 / AUX5 selector switch
- Mono / Stereo switch
- Mute
- Low cut crossover control allows you to cut off certain frequencies which comes in handy when using turntables, subs, and other gear. This function will allow you to play your music louder, with lower distortion and make your speakers last longer.
- Loudness compensation circuit which at low-to-medium volume boosts the bass and treble response
- Ground lift switch
- Unit dimensions: 18.89″ x 6.49″ x 1.73″ inches
- Unit weight: 4.43 lbs
- 110/220 switchable power supply (fuse: 0.2A)

SPECIFICATIONS

General

- Frequency Response: 5Hz . 30kHz +0, -3 dB
- Bass: 12dB at 100Hz
- Midrange: 9dB at 1 Hz
- Treble: 12dB at 10kHz
- Loudness: 9/0/+9dB at 100/1k/10kHz
- Mute: 20dB
- Power: 110V / 220V, 50/60Hz Switchable power supply
- Power Consumption: 15W

Input Sensitivity / Impedance

- Mic: 1mV / 3 K ohms
- PHONO: 3mV / 47 K ohms
- AUX1, 2, 3, 4, and 5: 150mV / 22 K ohms

Output Sensitivity / Impedance

- REC: 150mV / 3 K ohms
- Line: max. 11V / 1 K ohms

Total Harmonic Distortion

- Mic: < 0.02%
- PHONO: < 0.04%
- AUX1, 2, 3, 4, and 5: < 0.01%

Signal to Noise Ratio

- Mic: > 70dB
- PHONO: > 90dB
- AUX1, 2, 3 , 4, and 5: > 100dB

Functions

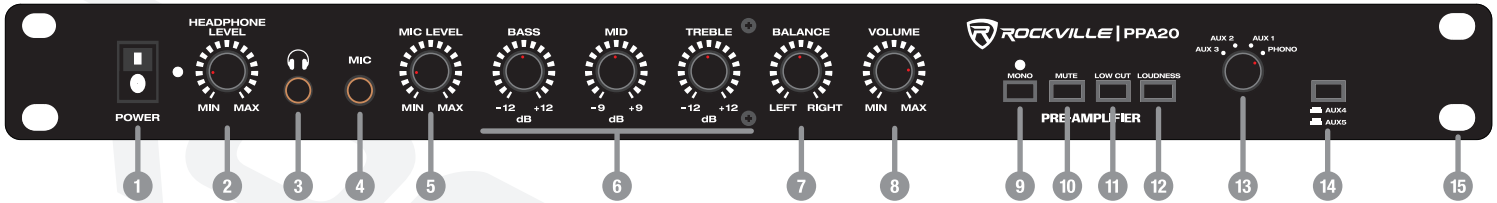

1. Power switch
2. Headphone level control
3. 1/4″ Headphone output
4. 1/4″ Microphone input
5. Microphone level control: adjusts volume of microphone input.
6. 3 band EQ: used to adjust the relative level of low, mid, and high frequencies.
7. Balance: adjusts the level of the left and right channels. The 12 o'clock position is the point of equal balance.
8. Master volume: controls the overall volume of the unit.
9. Mono / Stereo switch: when the unit is in Mono mode (LED will be lit) the two stereo channels are blended together to produce monophonic sound. This blend minimizes rumble and surface noise in old monophonic records. Push the button a second time (LED goes out) to get back to stereo.
10. Mute switch: Pushing this button reduces the volume of the amplifier output signal by approximately 20 dB. Please note that muting has no effect on the microphone volume.
11. Low cut switch: allows you to cut off certain frequencies which is essential when using turntables, subs, and other gear. This function will allow you to play your music louder, with lower distortion and make your speakers last longer.
12. Loudness switch: controls the loudness compensation circuit which at low-to-medium volume boosts the bass and treble response.
13. Input selector switch: allows user to select between PHONO, AUX1, AUX2, and AUX3 RCA inputs.

Functions

14. AUX4 / AUX5 selector switch: press to select AUX4 RCA input, depress to select AUX5 RCA input.
15. Rack ears: allows for unit rack mount using four attaching screws and washers (not included).

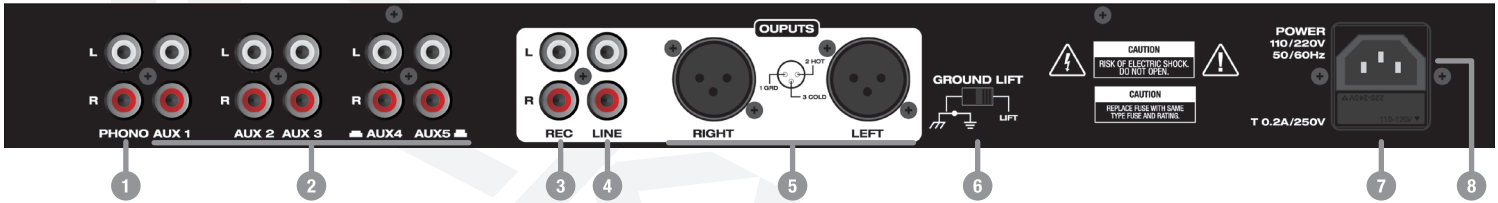

1. RCA PHONO input
2. RCA AUXinputs
3. RCA REC output
4. RCA LINE output
5. L / R XLR outputs
6. Ground Lift switch: Depending on your system configuration, applying the ground may create a quieter signal path. Switching to ground lift can eliminate ground loops and hum to create a quieter signal path.
7. User serviceable fuse
8. IEC AC Power socket

How to Switch Power Supply

Unit come preset to 110V. To switch to 220V follow the instructions below.

1. Pull out the fuse compartment.

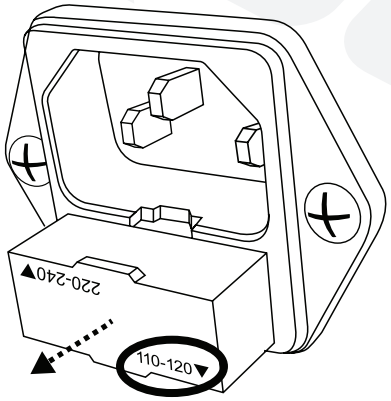

2. Rotate the fuse compartment so that the words 220-240 readable.

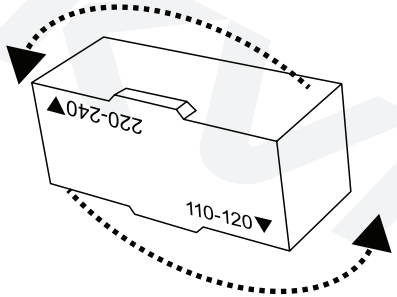

3. Re-insert fuse compartment.

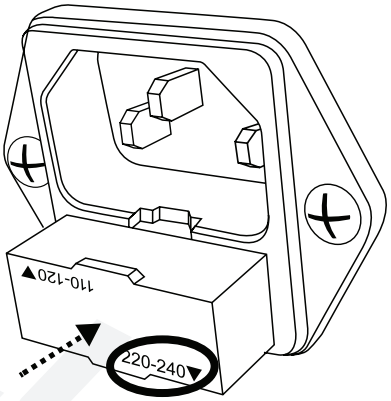

Troubleshooting

PROBLEM	SOLUTION
No Sound	1. Check all connections. 2. Check that the input selector is set to the correct source. 3. If using AUX4/AUX5, ensure that the selector button is set to the proper position.

FEDERAL COMMUNICATIONS COMMISSION COMPLIANCE INFORMATION

Responsible party name: Rockville

Address: 600 Bayview Ave.
Entrance A
Inwood, NY 11096

Hereby declares that the product PPA20 Rack Mount Pre-Amplifier complies with FCC rules as mentioned in the following paragraph:

This device complies with Part 15 of the FCC rules. Operation is subject to the following two conditions: (1) this device may not cause harmful interference, and (2) this device must accept any interference received, including interference that may cause undesired operation.

Note: This equipment has been tested and found to comply with the limits for a Class B digital device, pursuant to Part 15 of the FCC rules. These limits are designed to provide reasonable protection against harmful interference in a residential installation. This equipment generates, uses and can radiate radio frequency energy and, if not installed and used in accordance with the instructions, may cause harmful interference to radio communications. However, there is no guarantee that interference will not occur in a particular installation. If this equipment does cause harmful interference to radio or television reception, which can be determined by turning the equipment off and on, the user is encouraged to try to correct the interference by one or more of the following measures:

- Reorient or relocate the receiving antenna.
- Increase the separation between the equipment and receiver.
- Connect the equipment into an outlet on a circuit different from that to which the receiver is connected.
- Consult the dealer or an experienced radio/TV technician for help.

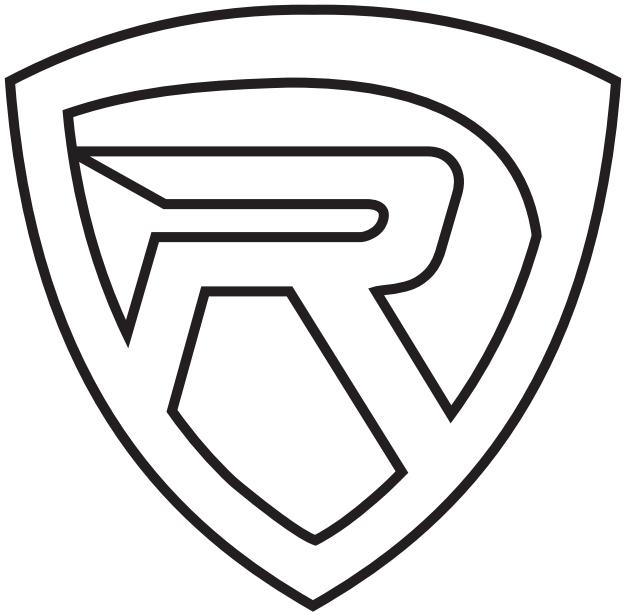

RockvilleAudio.com

© 2017 ROCKVILLE // Features and specifications are subject to change and or improvement without notice.