HiFi ENGINE®

For more Hi-Fi manuals and set-up information
please visit www.hifiengine.com

SA-800

FWW PIONEER

SA-800

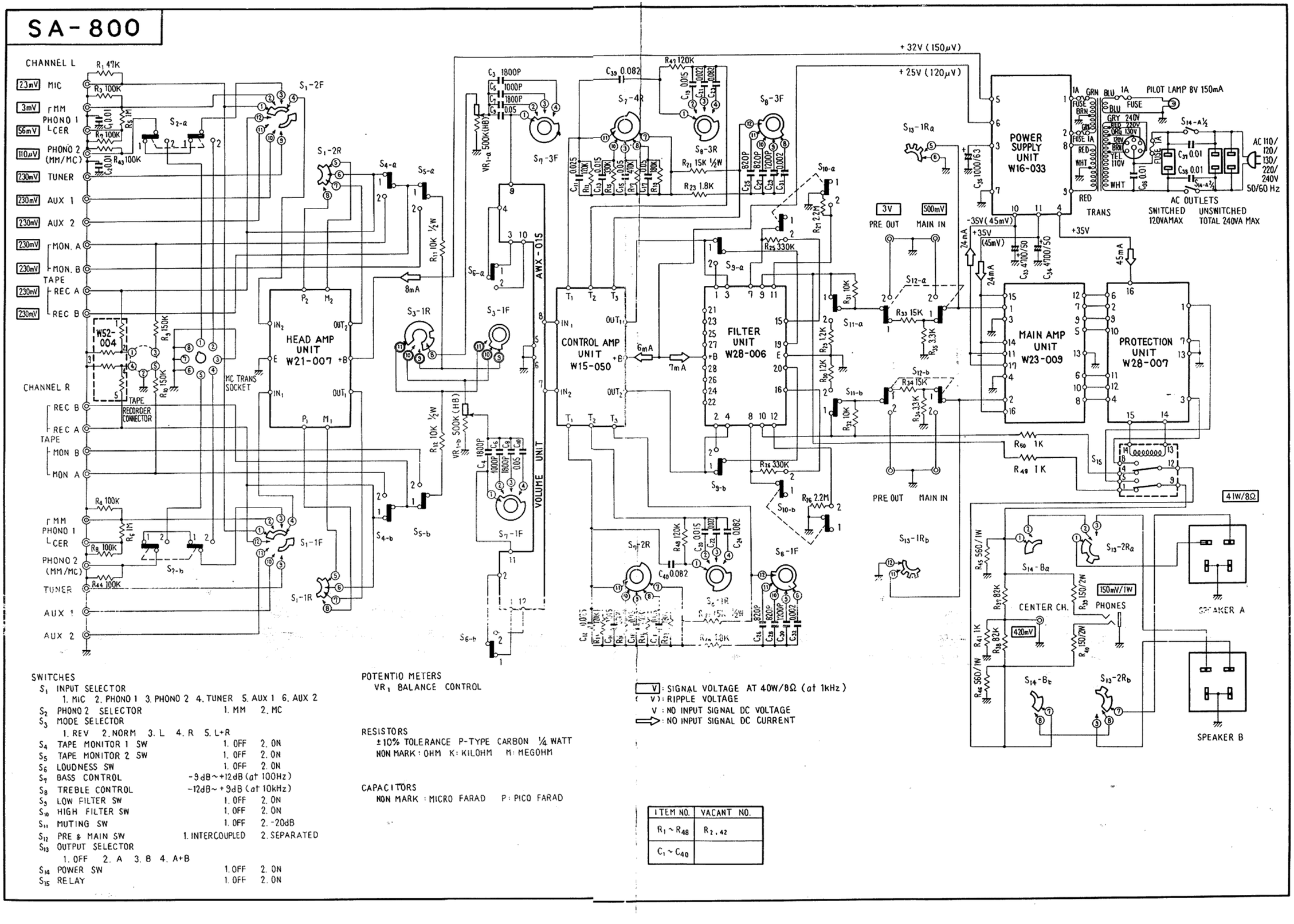

SWITCHES

S_1	INPUT SELECTOR 1. MIC 2. PHONO 1 3. PHONO 2 4. TUNER 5. AUX 1 6. AUX 2		
S_2	PHONO 2 SELECTOR	1. MM	2. MC
S_3	MODE SELECTOR 1. REV 2. NORM 3. L 4. R 5. L+R		
S_4	TAPE MONITOR 1 SW	1. OFF	2. ON
S_5	TAPE MONITOR 2 SW	1. OFF	2. ON
S_6	LOUDNESS SW	1. OFF	2. ON
S_7	BASS CONTROL	-9dB~+12dB (at 100Hz)	
S_8	TREBLE CONTROL	-12dB~+9dB (at 10kHz)	
S_9	LOW FILTER SW	1. OFF	2. ON
S_{10}	HIGH FILTER SW	1. OFF	2. ON
S_{11}	MUTING SW	1. OFF	2. -20dB
S_{12}	PRE & MAIN SW	1. INTERCOUPLED	2. SEPARATED
S_{13}	OUTPUT SELECTOR 1. OFF 2. A 3. B 4. A+B		
S_{14}	POWER SW	1. OFF	2. ON
S_{15}	RELAY	1. OFF	2. ON

POTENTIO METERS

VR_1 BALANCE CONTROL

RESISTORS

±10% TOLERANCE P-TYPE CARBON ¼ WATT
NON MARK : OHM K: KILOHM M: MEGOHM

CAPACITORS

NON MARK : MICRO FARAD P: PICO FARAD

[V]: SIGNAL VOLTAGE AT 40W/8Ω (at 1kHz)
(V): RIPPLE VOLTAGE
V : NO INPUT SIGNAL DC VOLTAGE
⇨: NO INPUT SIGNAL DC CURRENT

ITEM NO.	VACANT NO.
R_1 ~ R_{48}	$R_{2,42}$
C_1 ~ C_{40}	

HEAD AMP UNIT

W21-007

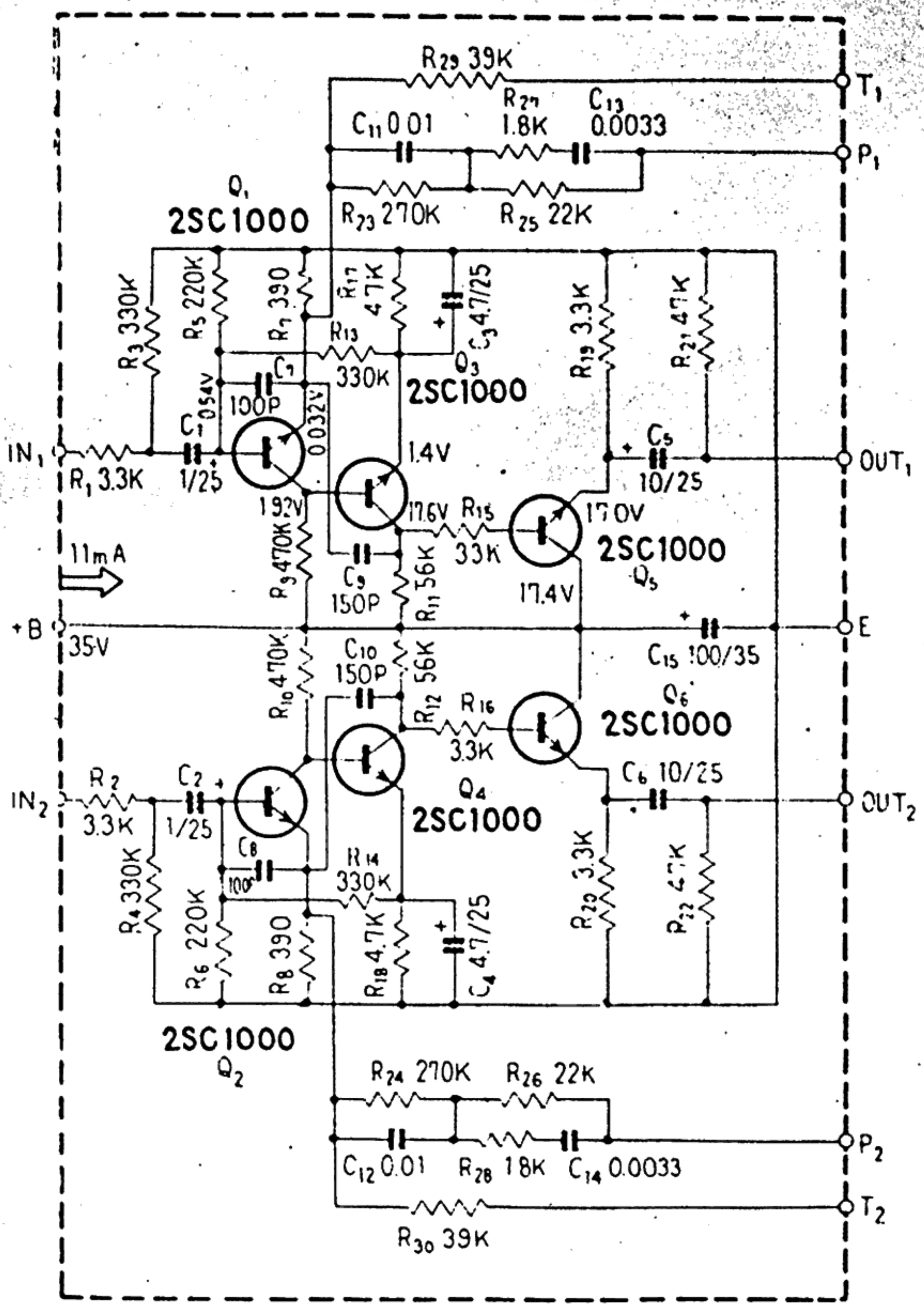

PROTECTOR UNIT

W28 - 007

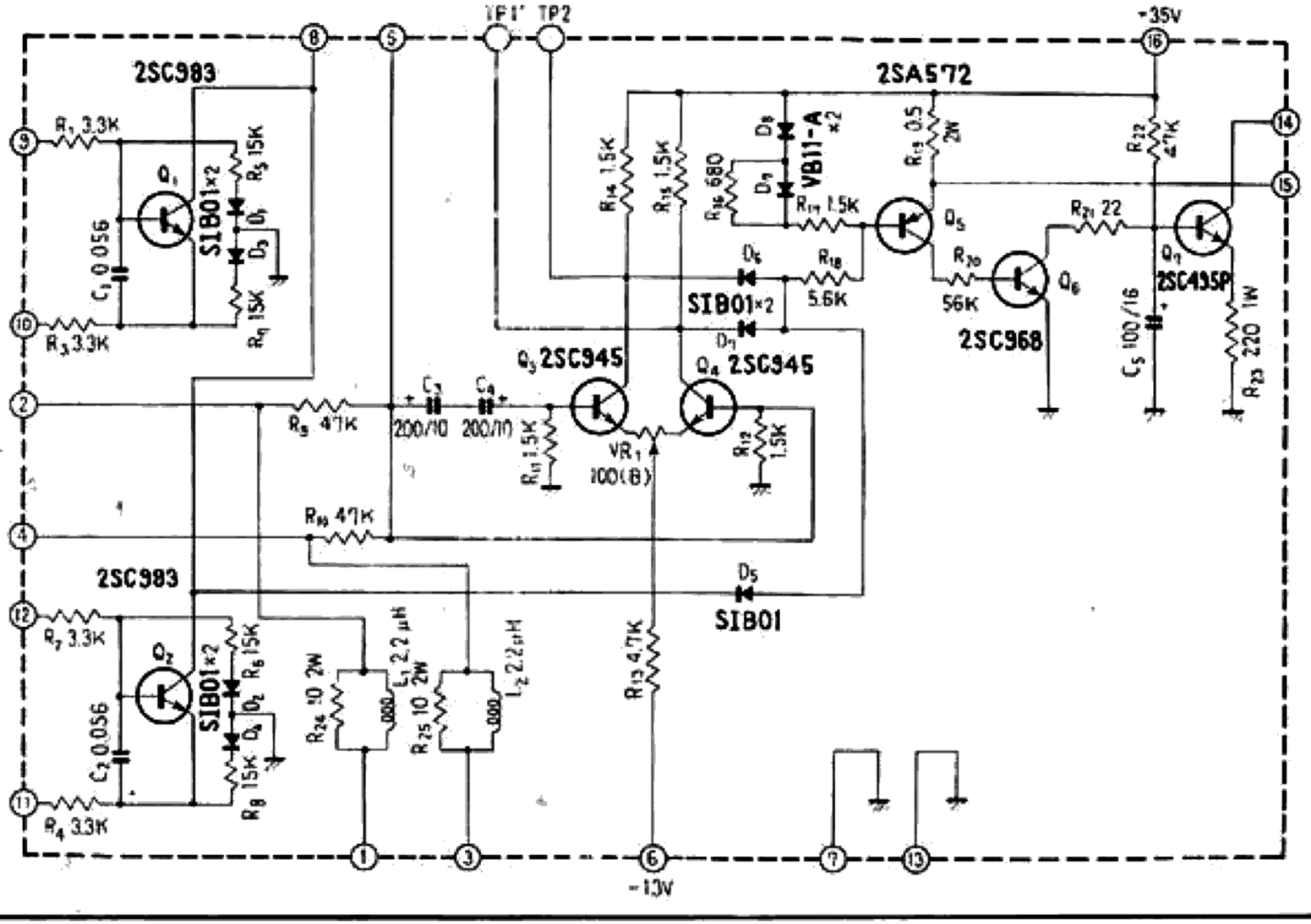

MAIN AMP UNIT

W23 - 009

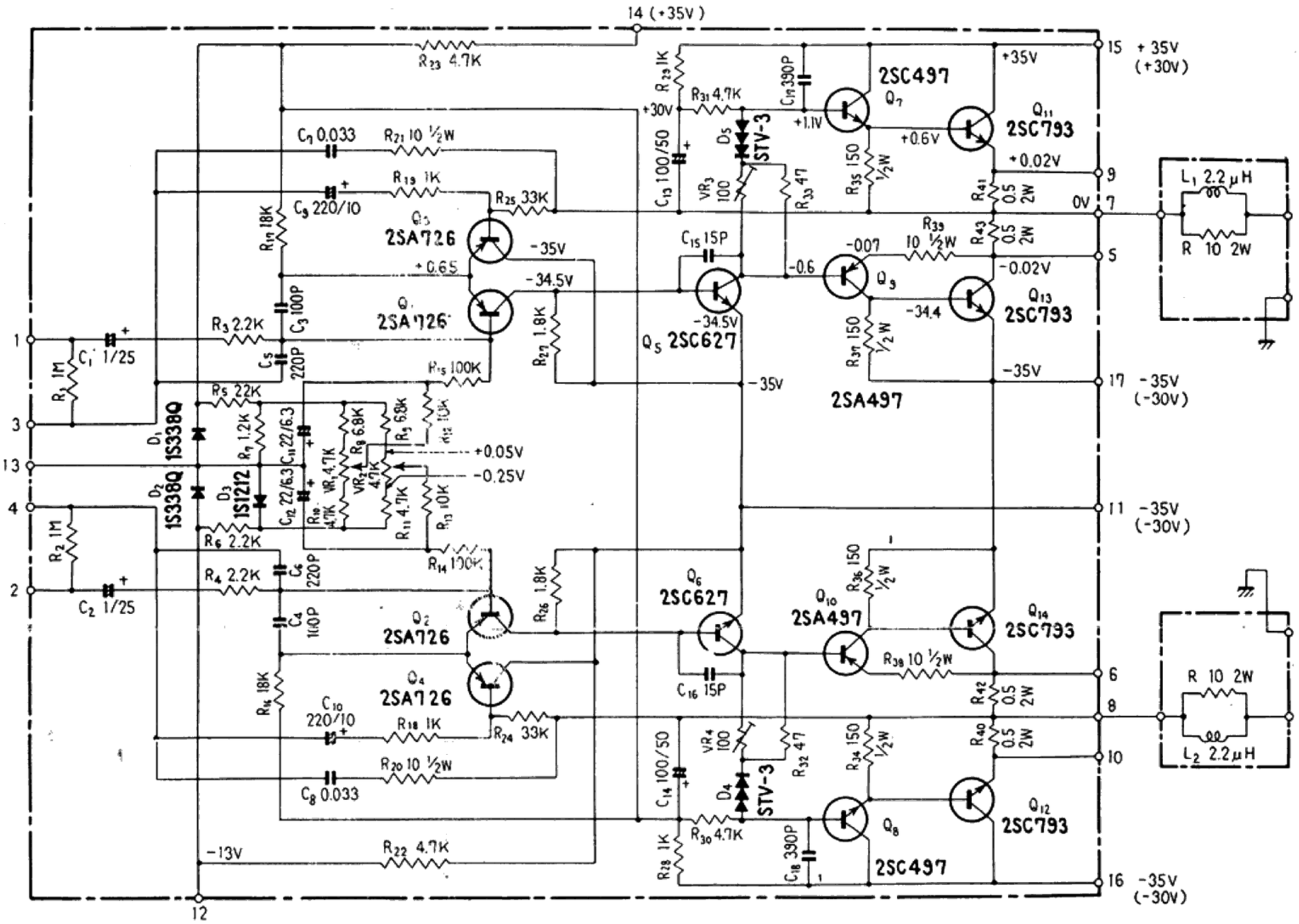

POWER SUPPLY UNIT

W16-033

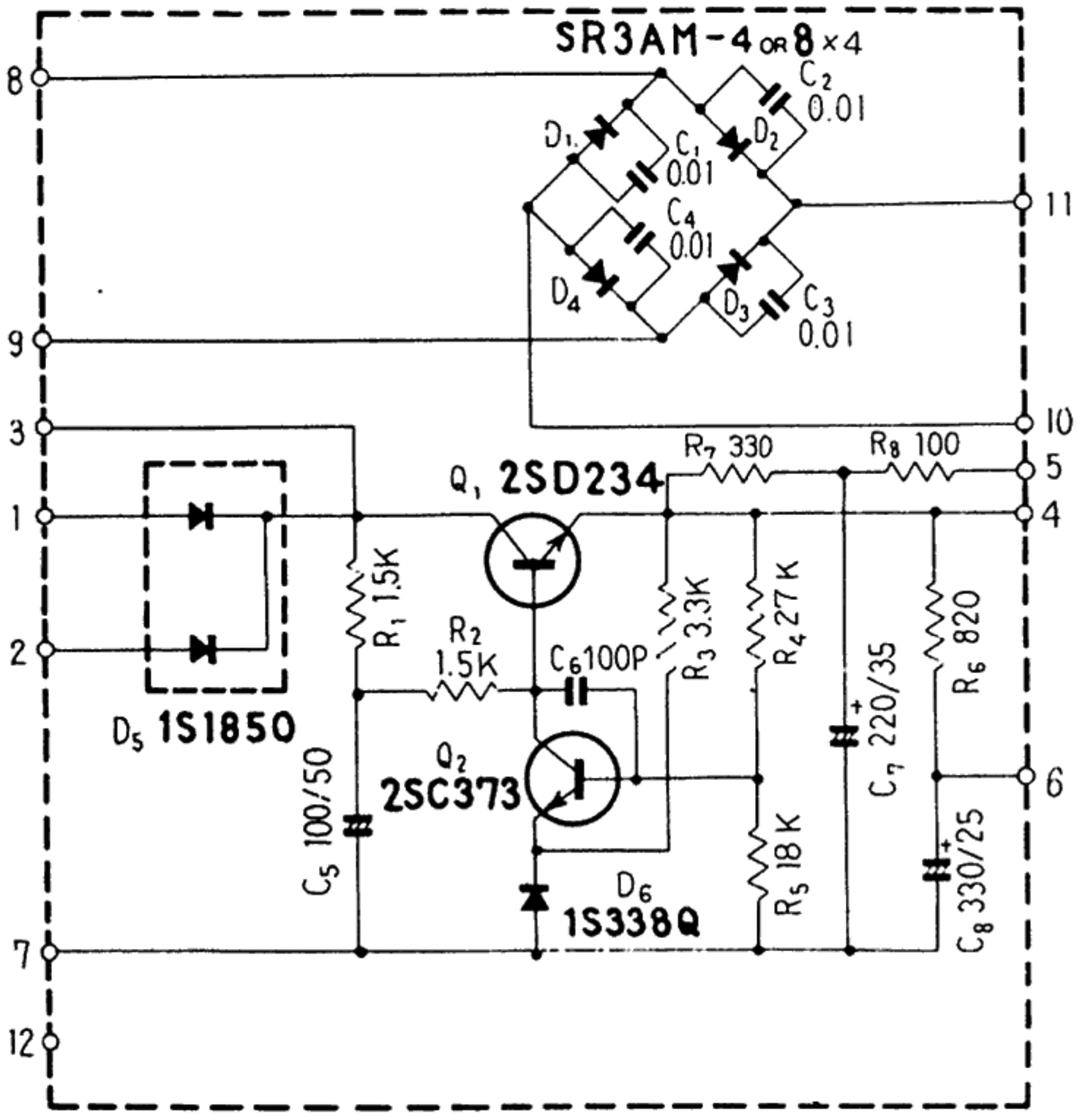

CONTROL AMP UNIT

W15-050

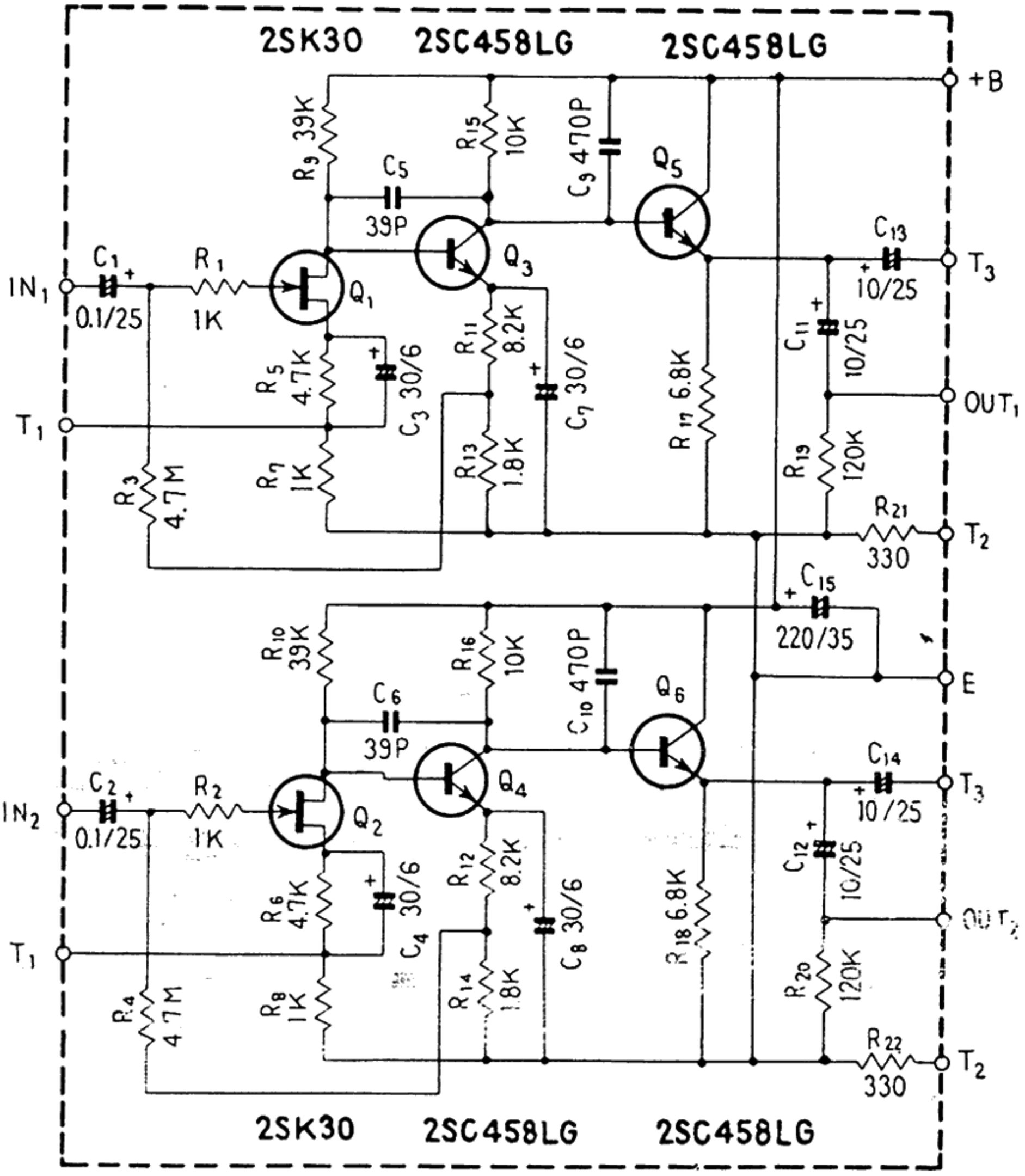

FILTER UNIT

W28-006

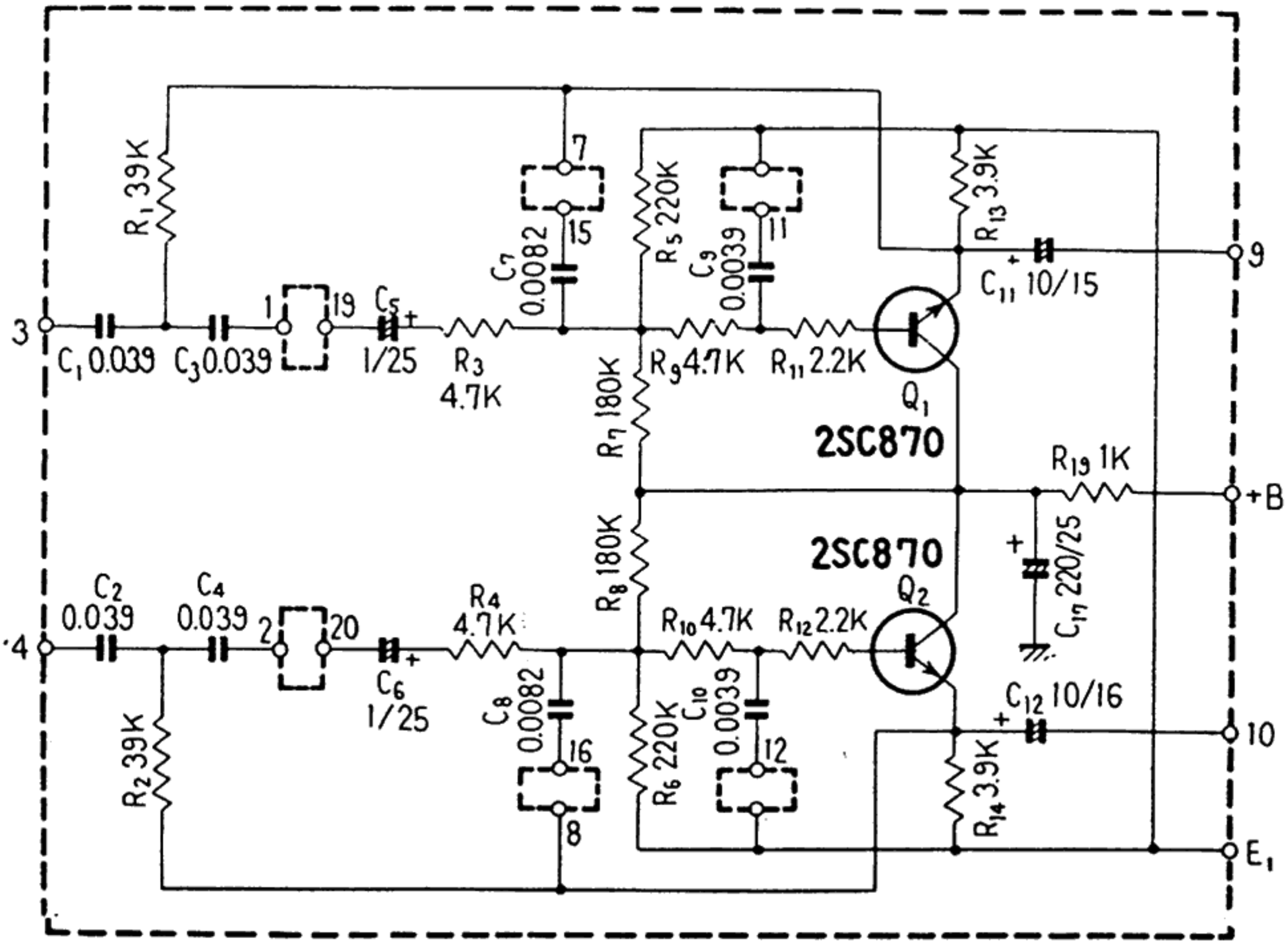

MOUNTING TEMPLATE

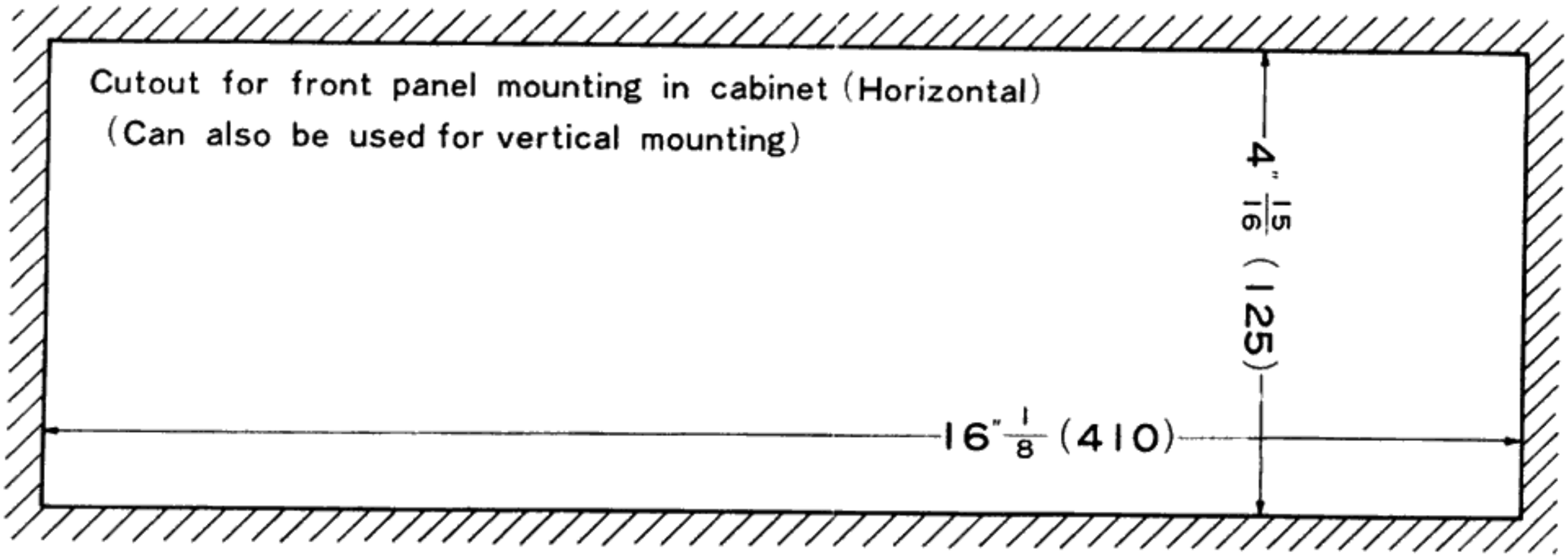

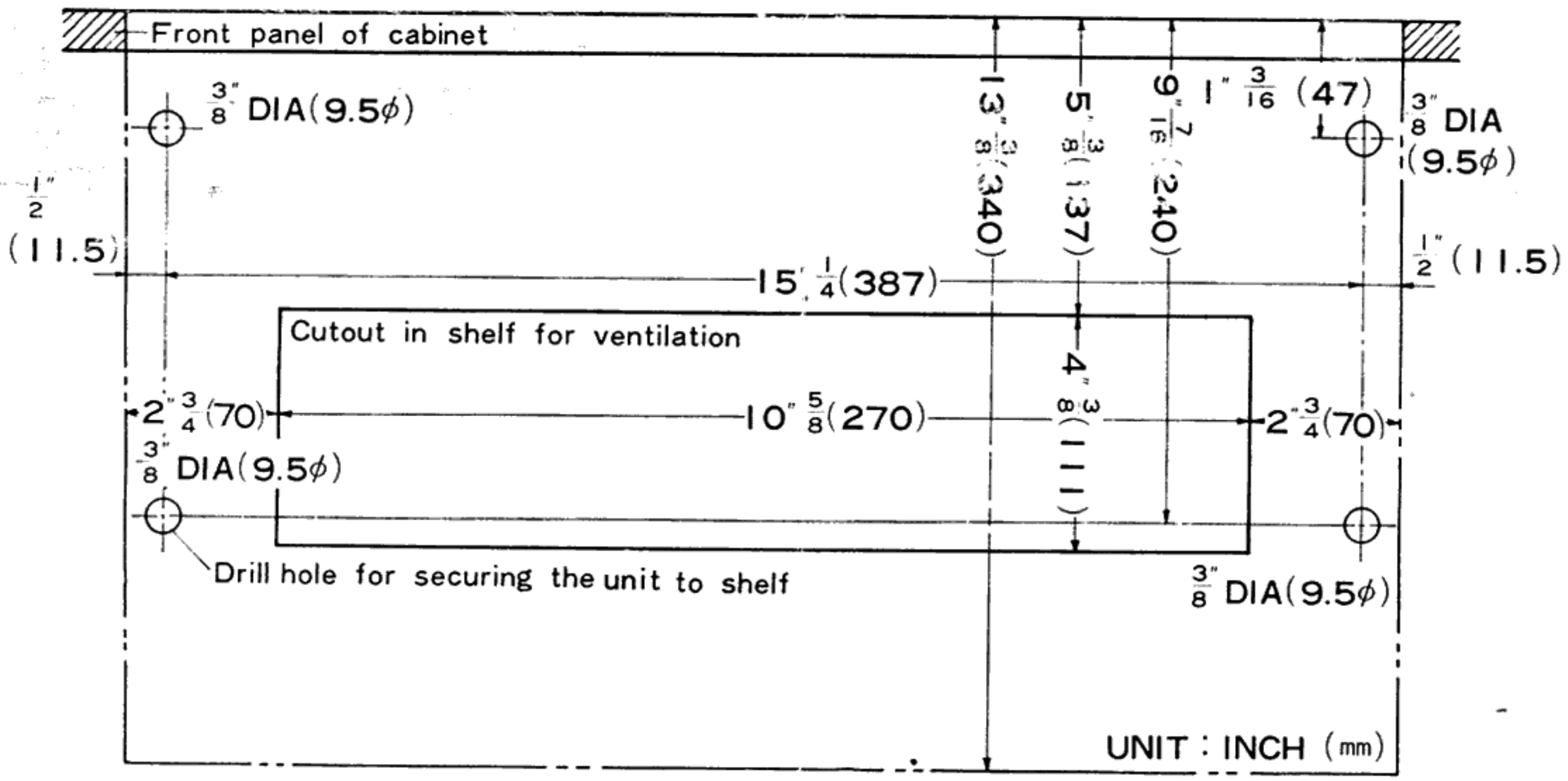

Remove the four feet on the bottom plate of the unit.

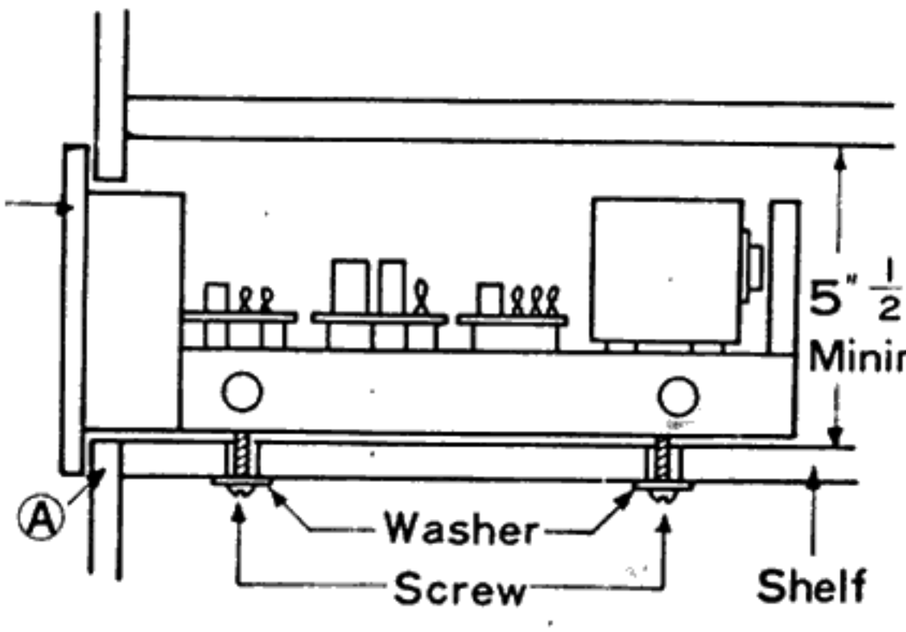

The top of the shelf must not be higher than the cutout portion of the cabinet front.