HiFi ENGINE®

For more Hi-Fi manuals and set-up information
please visit www.hifiengine.com

www.hifiengine.com

〈R42-189-0〉

Service Manual

STEREO AMPLIFIER

SA-800 / FVW, KUW, KCW

NOTE

MODEL SA-800 COMES IN THREE VERISIONS DISTINGUISHED AS FOLLOWS:

Round label on rear panel	Voltages	Type
KUW	120V only	UL approved (U.S.A.)
FVW	5-position selector	General export model
KCW	120V only	CSA approved (Canada)

〈7IH02M41D〉

PIONEER®

www.hifiengine.com

CONTENTS

1. SPECIFICATIONS 1
2. FRONT PANEL FACILITIES 3
3. CONNECTION DIAGRAM 5
4. CIRCUIT DESCRIPTION
   - 4-1 Block diagram 7
   - 4-2 Low level input circuits 9
   - 4-3 Head amplifier circuit 9
   - 4-4 High level inputs and control circuits 9
   - 4-5 Control amplifier circuit 9
   - 4-6 Filter 9
   - 4-7 Power amplifier circuit 9
   - 4-8 Protector circuit 9
   - 4-9 Power supply circuit 9
5. DISASSEMBLY
   - 5-1 Wooden case 10
   - 5-2 Front panel 10
   - 5-3 Bottom plate 10
   - 5-4 Parts and PCB locations 11
6. ALIGNMENT PROCEDURES
   - 6-1 DC neutral voltage & detector circuit adjustment 12
   - 6-2 Idle current adjustment 12
7. SCHEMATIC DIAGRAMS AND PCB PATTERNS 13
8. PARTS LIST 22
9. PACKING METHOD AND PARTS 35

www.hifiengine.com

1 • SPECIFICATIONS

SEMICONDUCTORS

FETs	2
Transistors	35
Diodes	20

POWER AMPLIFIER SECTION

Music Power Output (IHF)	165 Watts (4Ω) 108 Watts (8Ω)
Continuous Power Output (each channel driven)	53W/53W (4Ω) 41W/41W (8Ω)
Continuous Power Output (both channel driven)	39W + 39W (4Ω) 34W + 34W (8Ω)
Power Output in the range of 20Hz to 20kHz (both channel driven)	26W + 26W (8Ω, Harmonic Distortion Less than 0.5%)
Harmonic Distortion	Less than 0.5% (Continuous power output)
Intermodulation Distortion	Less than 0.5% (Continuous power output)
Power Bandwidth (IHF)	5Hz to 50kHz (8Ω, Harmonic Distortion Less than 0.5%)
Frequency Response	5Hz to 80kHz, ±1dB
Input Sensitivity/Impedance (1kHz, Continuous power output)	560mV/100kΩ
Speakers	4 to 16Ω
Damping Factor	More than 65 (8Ω, 1kHz)
Center Channel Output	500mV

PREAMPLIFIER SECTION

Output Voltage	3V (Rated output), 5V (Max.)
Harmonic Distortion	Less than 0.1%
Frequency Response	20Hz to 60kHz, ±1dB
Input Sensitivity/Impedance (1kHz, for rated output)	PHONO 1. MAG 3mV/50kΩ CER 56mV/100kΩ PHONO 2. MM 3mV/50kΩ MC 110μV/30Ω (with PHONO INPUT TRANSFORMER "PP-402") MIC 2.3mV/50kΩ TUNER 230mV/200kΩ AUX 1, 2 230mV/200kΩ TAPE MONITOR 1, 2 230mV/200kΩ
Recording Output	TAPE REC 1, 2 (Pin jack) 230mV TAPE REC (DIN connector) 35mV
BASS Control (3dB step)	–9dB, +12dB (100Hz)
TREBLE Control (3dB step)	–12dB, +9dB (10kHz)
LOW Filter	–3.5dB/60Hz (12dB/oct.)
HIGH Filter	–3dB/6kHz (12dB/oct.)

www.hifiengine.com

Equalization Curve	PHONO: RIAA	
Loudness Contour	+11.5dB/100Hz, +6.5dB/10kHz with Volume Control set at −40dB position.	
Muting	−20dB	
Hum and Noise (IHF)	PHONO	More than 80dB
	TUNER, AUX	More than 100dB
Channel Separation (1kHz)	PHONO	More than 50dB
	TUNER, AUX	More than 55dB

MISCELLANEOUS

Power Requirements	120V, 60Hz (KUW, KCW)	
	110V, 120V, 130V, 220V and 240V. 50 to 60Hz (FVW)	
Power Consumption	230W (Max.)	
Dimensions (overall)	$16\text{-}\frac{15}{16}$ in./430mm (width)	
	$5\text{-}\frac{11}{16}$ in./145mm (height)	
	$13\text{-}\frac{1}{4}$ in./337mm (depth)	
Weight: Without package	23lb/10.3kg	
With package	27lb/12.3kg	

NOTE: Specification and the design subject to possible modification without notice due to improvements.



www.hifiengine.com

2 • FRONT PANEL FACILITIES

■ POWER SWITCH

Controls power to the unit. Setting it to ON will apply power to the unit.

■ SPEAKER SWITCH

Selects the speaker system to be used.

OFF ..... No sound comes from any speaker system. Useful when listening through headphones.

A ..... Sound comes through the speaker system connected to the A speaker terminals.

B ..... Sound comes through the speaker system connected to the B speaker terminals.

A + B .... Both A and B speaker systems are energized.

■ PHONES JACK

Use this to plug in stereo headphones. A full selection of high-performance headphones is available from Pioneer.

■ BASS CONTROLS

Operation is the same as for the TREBLE controls.

■ FILTER SWITCHES

LOW ..... Setting to ON will eliminate low frequency noises, such as record rumble, hum, or other interference. The switch is normally set to OFF, unless the filter is required.

HIGH ..... Setting to ON will eliminate high frequency noises, such as record scratch, hiss, static noise from fluorescent lamps, or other interference. The switch is normally set to OFF, unless the filter is required.

■ TREBLE CONTROLS

Turn them to the right (clockwise) from the FLAT position to boost the high tone, and turn them to the left (counterclockwise) to diminish it. The scale markings in dB (decibels) enable the listener to read the actual settings.

■ VOLUME CONTROL

To increase the volume, turn it to the right (clockwise).

■ MUTING SWITCH

Pressing this switch down to the –20dB position decreases the volume by 20dB instantly. Setting it to the OFF position restores the volume to normal.

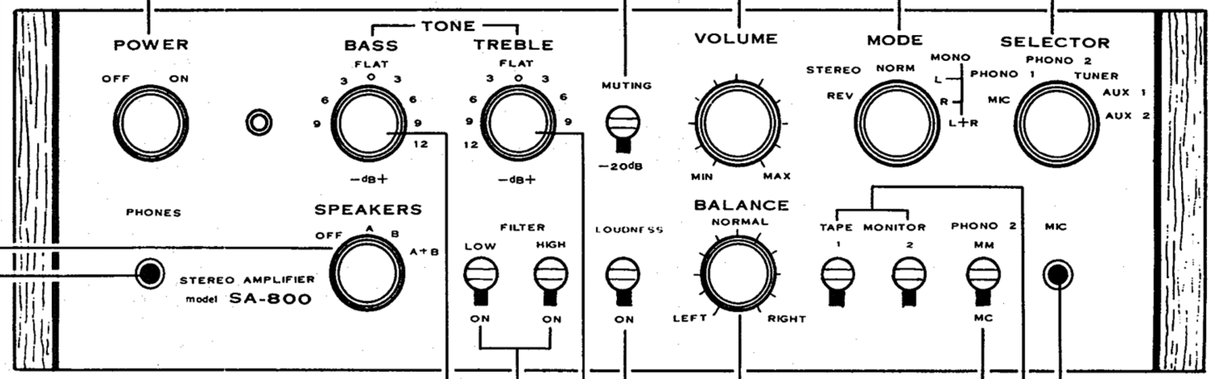

■ LOUDNESS SWITCH

To listen to quieter sound, set this to the ON position. This emphasizes the low and high notes. For normal listening, set it to the OFF position.

■ BALANCE CONTROL

This control balances the volume of the left and right speaker systems. Where the volume from the right-hand speakers is too low, turn it to the right (clockwise). Where the volume from the left-hand speakers is too low, turn it to the left (counterclockwise).

■ PHONO 2 MM/MC SWITCH

Set this switch according to the type of cartridge used in the turntable connected to the PHONO 2 terminals.

MM ..... For a moving magnet (MM) cartridge.

MC ..... For a moving coil (MC) cartridge.

■ MODE SWITCH

This selects mode sound reproduction.

STEREO REV ..... Stereo with the left and right channels reversed.

STEREO NORM ... Normal stereo

MONO L ..... Input signals of the left channel through speakers.

MONO R ..... Input signals of the right channel through speakrs.

MONO L + R ..... Input signals of left and right channels are mixed and reproduced through both speakers. (Monophonic sound)

■ SELECTOR SWITCH

This selects the program source.

MIC ..... Microphone sound can be reproduced through the speakers or recorded on tape.

PHONO 1 ..... To use the turntable connected to the PHONO 1 terminals.

PHONO 2 ..... To use the turntable connected to the PHONO 2 terminals.

TUNER ..... To use a tuner connected to the TUNER terminals.

AUX 1 ..... To use a cassette or cartridge tape player or other program source connected to the AUX 1 terminals.

AUX 2 ..... To play TV sound track or another program source connected to the AUX 2 terminals.

■ MIC JACK

Connect the plug attached to the microphone lead to this jack. A high-impedance, dynamic-type microphone with a standard plug should be used. A selection of high-performance dynamic microphone is available from Pioneer.

■ TAPE MONITOR SWITCHES (1 and 2)

These switches are set to ON for test-listening of recording in progress or playback of recorded tapes with tape decks.

1 ..... This switch is set to ON for using a tape deck connected to TAPE 1 MON terminals and TAPE 1 REC terminals or TAPE REC/P.B. connector.

2. ..... This switch is set to ON for using a tape deck connected to TAPE 2 MON terminals and TAPE 2 REC terminals.

NOTE: For a normal playback function except for tape playback, leave these switches set to the upper position (OFF position). If the switches are set to ON, sound does not come out from speakers.

www.hifiengine.com

3 • CONNECTION DIAGRAM

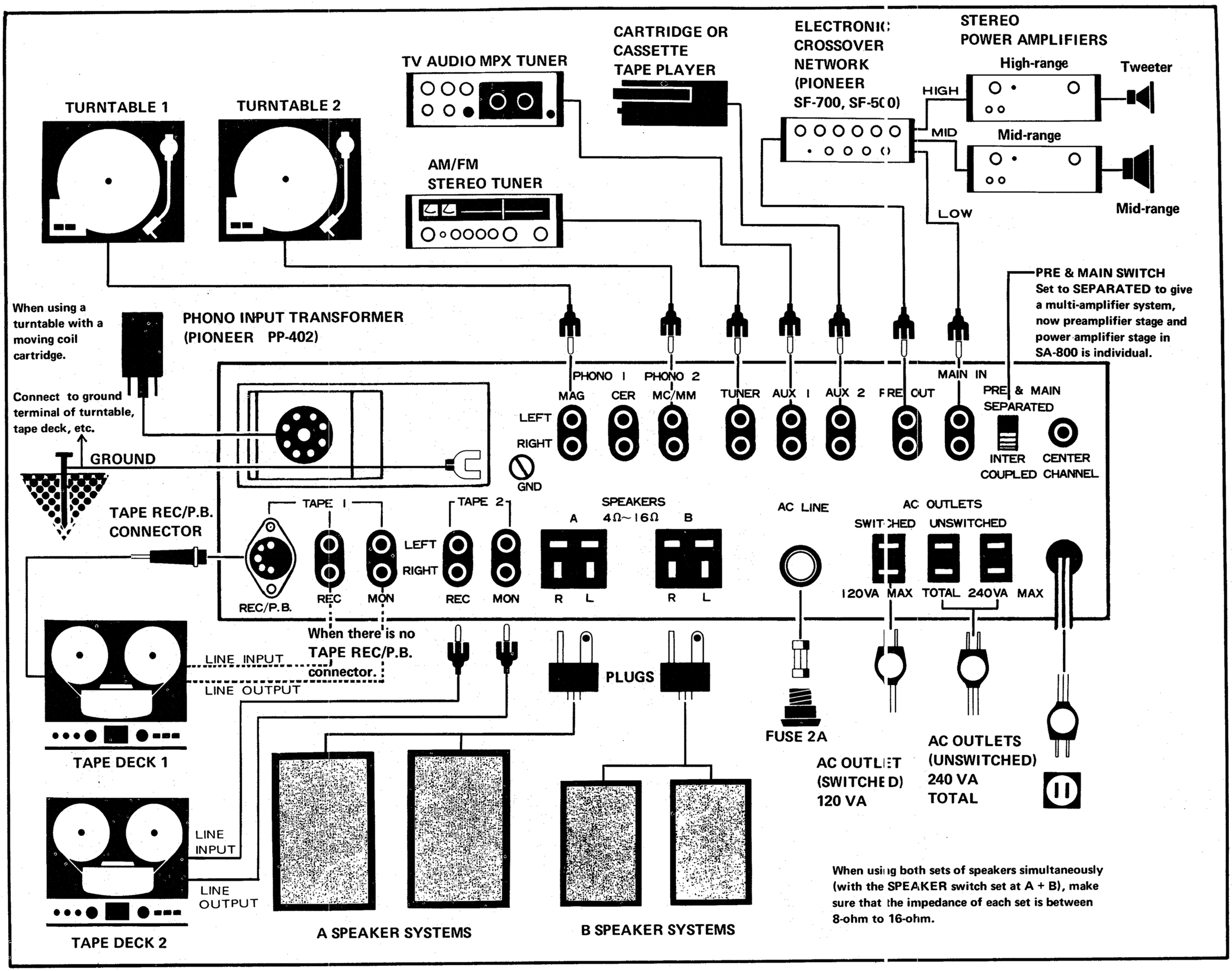

www.hifiengine.com

4 • CIRCUIT DESCRIPTION

4-1 BLOCK DIAGRAM

The block diagram shows the signal path in the SA-800 as well as the auxiliary circuits such as the overload protector and power supply.

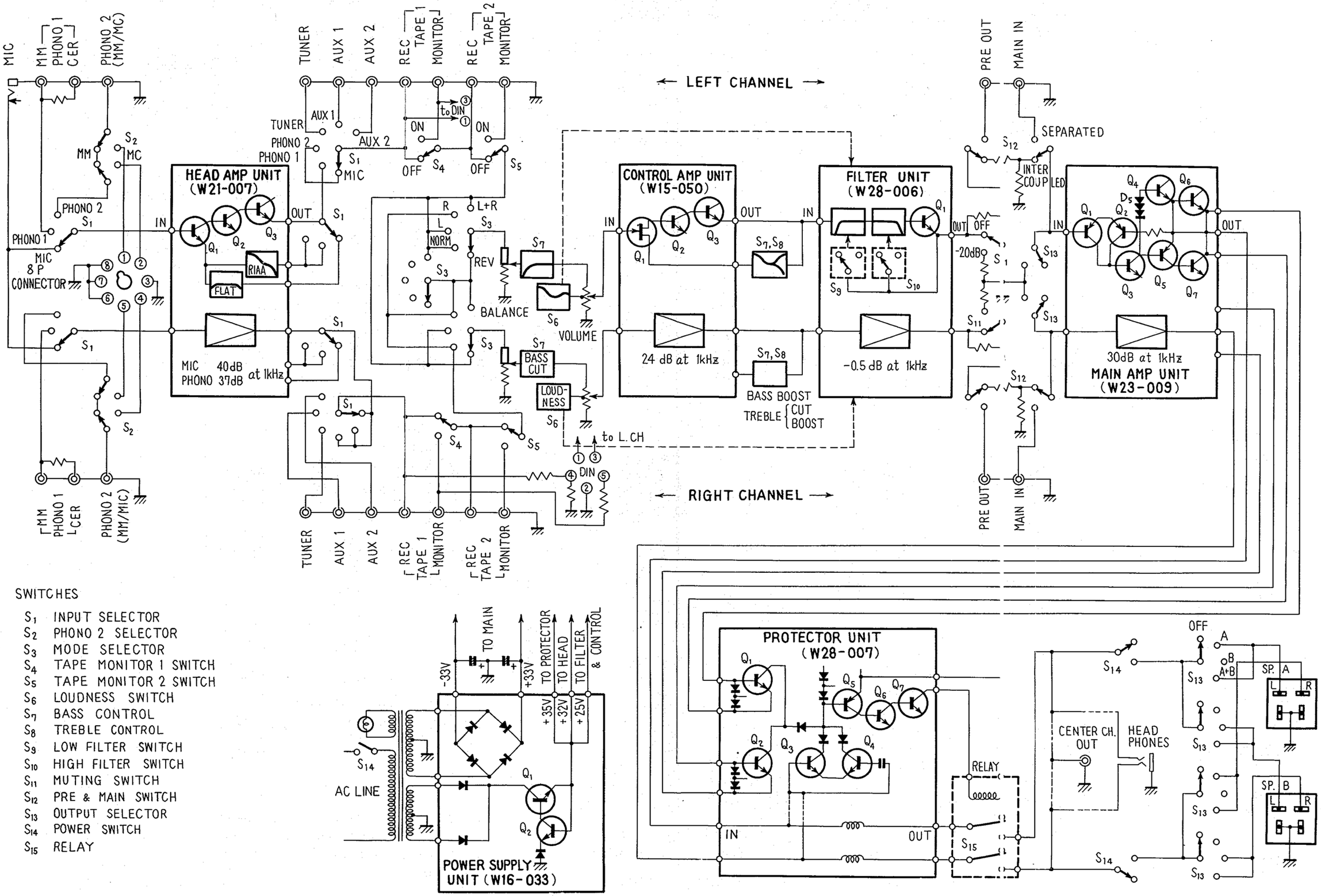

SWITCHES

S_1	INPUT SELECTOR
S_2	PHONO 2 SELECTOR
S_3	MODE SELECTOR
S_4	TAPE MONITOR 1 SWITCH
S_5	TAPE MONITOR 2 SWITCH
S_6	LOUDNESS SWITCH
S_7	BASS CONTROL
S_8	TREBLE CONTROL
S_9	LOW FILTER SWITCH
S_{10}	HIGH FILTER SWITCH
S_{11}	MUTING SWITCH
S_{12}	PRE & MAIN SWITCH
S_{13}	OUTPUT SELECTOR
S_{14}	POWER SWITCH
S_{15}	RELAY

www.hifiengine.com

4-2 LOW LEVEL INPUT CIRCUITS

Low level signals such as from phono cartridge or microphone are supplied into the PHONO 1 and 2 or MIC input jacks. S2 selects between moving coil (MC) and moving magnet (MM) cartridge.
Low output MC cartridges can be accommodated with the help of an optional step-up transformer (Pioneer model PP-402) which can be plugged into the 8P connector.
Program sources are selected by the input selector, S1.

4-3 HEAD AMPLIFIER

The complete head amplifier is contained on the W21-007 PCB, consisting of two voltage amplifiers and directly coupled emitter-follower circuitry. The overall negative feedback loop circuit for equalization is connected between the emitters of Q1 and Q3.
Equalization characteristics are: RIAA playback for PHONO, flat response for microphone.

4-4 HIGH LEVEL INPUTS AND CONTROL CIRCUITS

High level inputs such as AUX 1, 2 and TUNER are also selected by S1. Input from tape deck and recording output signal (a head amplifier output or a direct output from a high level input) are switched by S4 and S5, respectively. The selected signal then passes to mode switch S3, balance and volume controls through the RC network which establishes the characteristic of the tone control bass cut side. This characteristic can be switched by part of S7.

4-5 CONTROL AMPLIFIER

This stage, consisting of one FET and two transistors, is embodied on PCB No. W15-050. The FET is used in the top amplifier to obtain stable, high impedance under all conditions; the Q3 emitter-follower circuit maintains good negative feedback conditions for the tone control circuits.
The output from this stage passes to the next filter stage and the switched RC network which determines the tone control characteristics, i.e. treble boost and cut and bass boost.

4-6 FILTER

The filter stage is embodied on PCB No. W28-006.
Filter design uses switchable RC factors with emitter-follower transistors. Basically, this filter operates according to the active filter principle; it features a steep-slope, 12dB/oct. characteristic.

4-7 POWER AMPLIFIER CIRCUIT

The power stereo amplifier stage consists of 4 power transistors mounted on PCB No. W23-009. Of the seven transistors in each channel, Q1 and Q2 operate in pairs, forming a differential amplifier. This eliminates DC voltage and current drift caused by ambient temperature changes, thereby stabilizing the amplifier's total performance.
In the above-mentioned differential amplifier, the base of Q1 receives the signal input while the overall NFB voltage is applied to the base of Q2. The output from the Q2 emitter is applied to the emitter of Q1. On the other hand, an inverted emitter input is also applied to the base of Q1 so that Q1 amplifies the sum total of these input values.
The output from Q1 drives the quasi-complementary Darlington output stage consisting of transistor pairs Q4/Q6 and Q5/Q7. D5 works to stabilize the bias of Q4, Q5, Q6 and Q7 against temperature fluctuations.

4-8 PROTECTOR CIRCUIT

The protector consists of two types of detectors and a DC amplifier, all assembled on PCB No. W28-007.
Q1 (Q2) is a detector for static overload exceeding the rated collector current limit and caused by thermal running of the power transistors or trouble in some part, and for dynamic overload caused by a drop in the output load impedance below 2Ω. Q1 protects the left channel, Q2 the right channel. Q3 and Q4 form a differential amplifier which detects DC drift voltages present at the output terminal of the power amplifier.
It serves both channels simultaneously. Q5 - Q7 form a trigger circuit for the relay at the DC amplifier. In normal operation, the relay contacts are closed by the collector current of Q7 and the output signal is fed to the speakers. If the detector discovers some trouble, the relay opens and disconnects the output terminals from the original output point in the circuit.

4-9 POWER SUPPLY CIRCUIT

Q1 and Q2 are voltage regulator, supplying low-ripple rectified current to the preamplifier. The balanced voltage supply for the power amplifier is obtained from other power transformer taps via a briged rectifier. All parts except the filter capacitor and power transformer are lacated on PCB No. W16-033.

www.hifiengine.com

5 · DISASSEMBLY

5·1 WOODEN CASE

Remove the 4 screws from the side of the wooden case. Pull the case backward off the amplifier housing.

5·2 FRONT PANEL

Pull off all knobs, then remove nuts and washers from shafts as illustrated in Fig. 1. The front panel can be removed.

5·3 BOTTOM PLATE

The bottom plate can be removed after loosening the 10 screws.

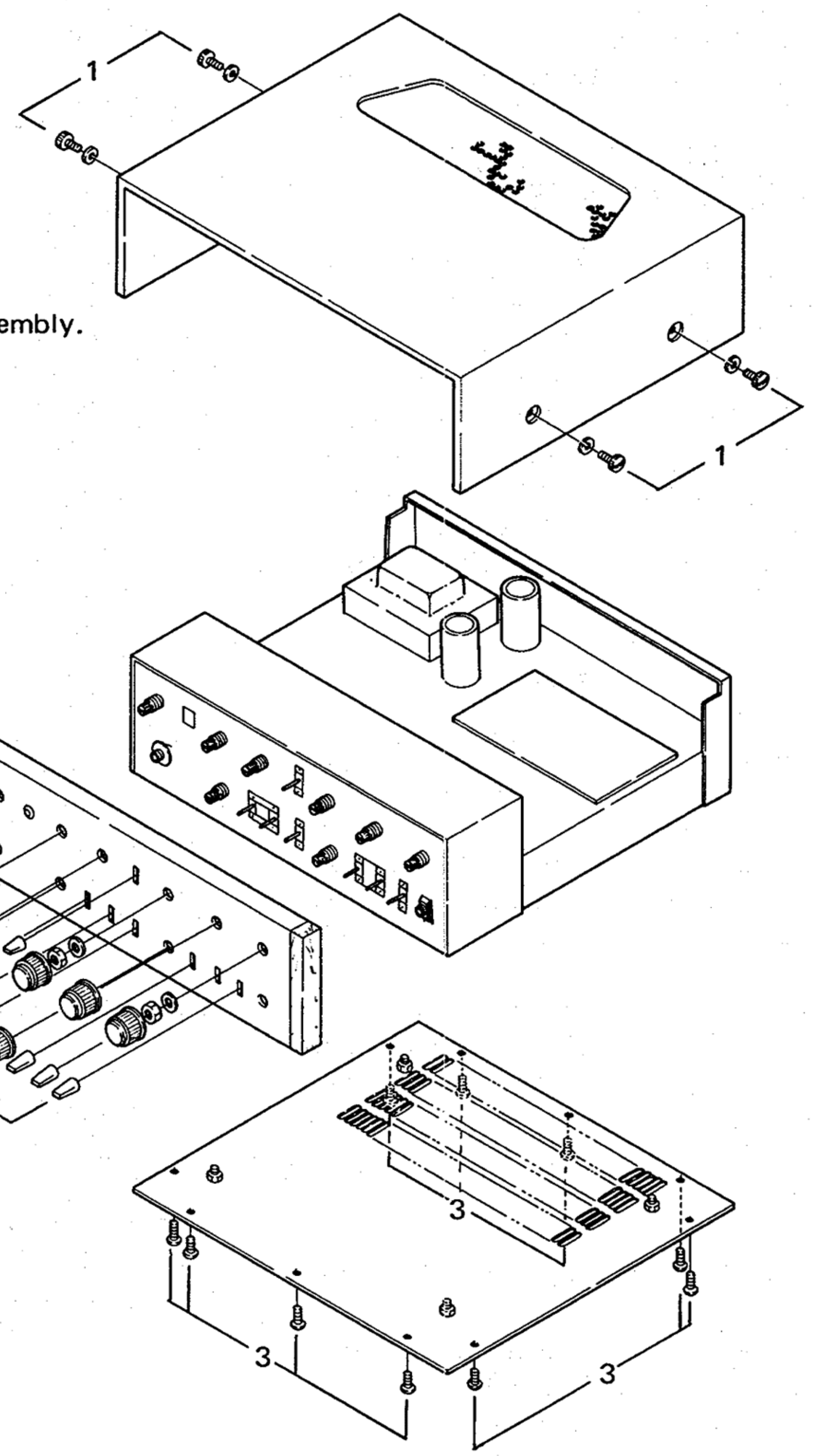

- Numbers indicate order of disassembly.

Fig. 1

www.hifiengine.com

5-4 PARTS AND PCB LOCATIONS

TOP VIEW

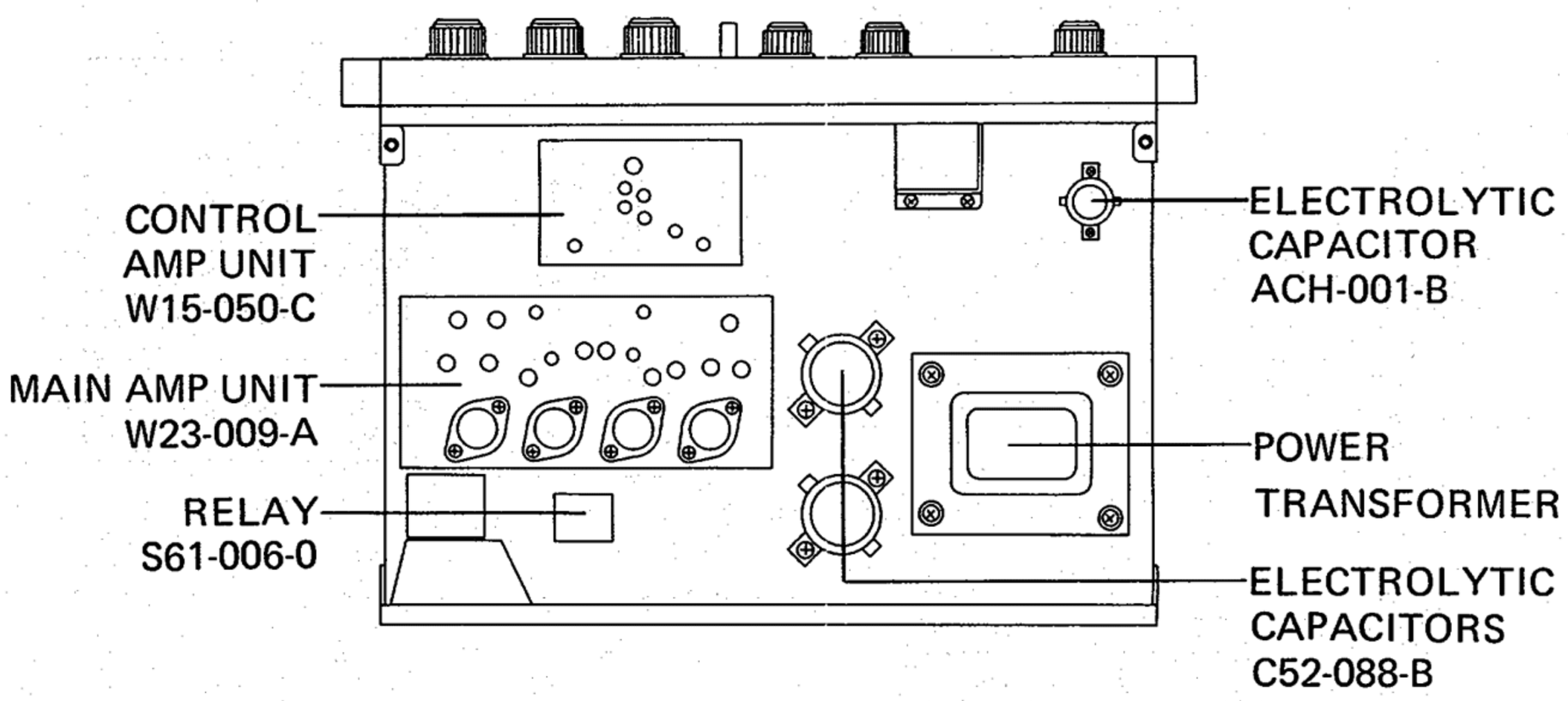

BOTTOM VIEW

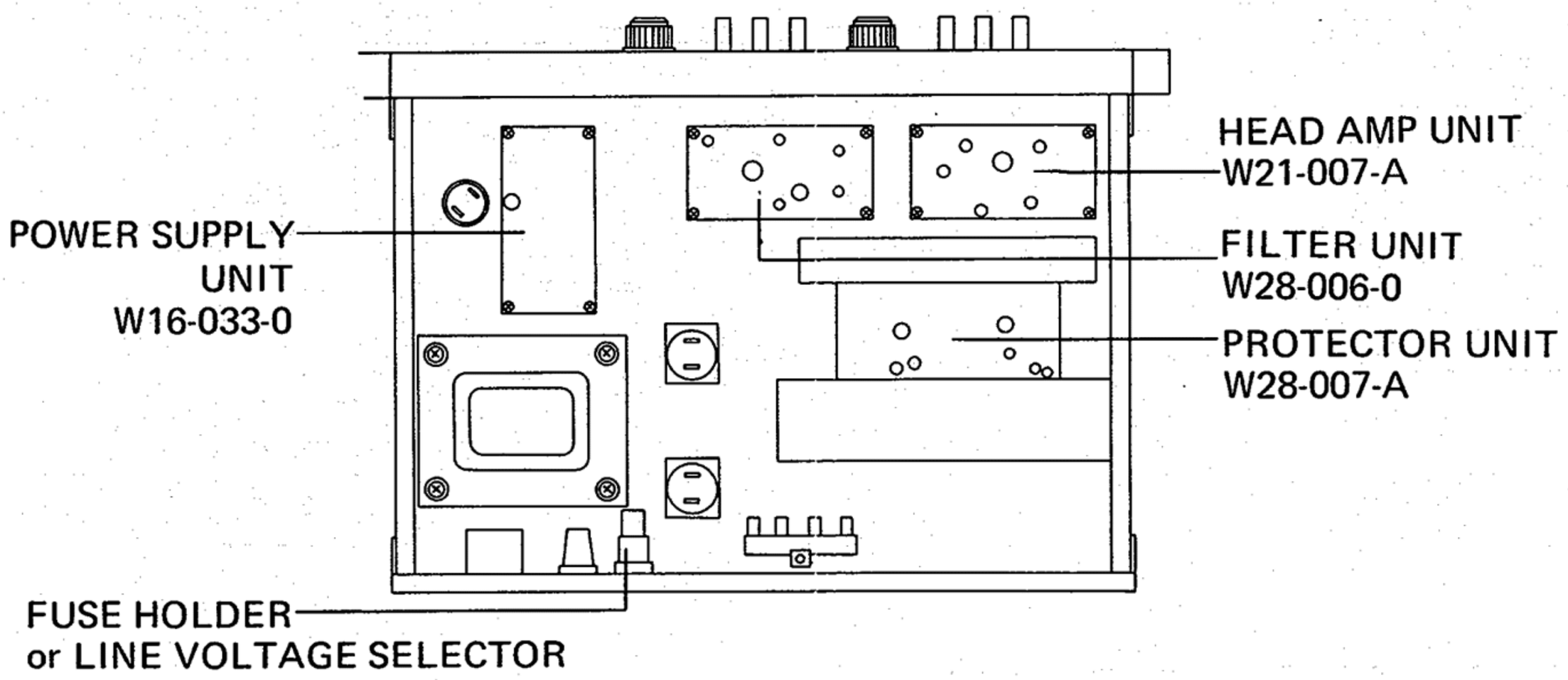

www.hifiengine.com

6 • ALIGNMENT PROCEDURES

6-1 DC NEUTRAL VOLTAGE & DETECTOR CIRCUIT ADJUSTMENT

The following adjustments are effective in case such as

1. protector cuts off output immediately when power is turned on, without obvious reason,
2. clipping distortion at volume peaks,
3. smothered sound at low volume levels, although preamplifier output is clean.

a) Set all controls as follows:

INPUT SELECTOR	AUX 1
MODE SELECTOR	STEREO NORM
PHONO 2 SELECTOR	MM
TAPE MONITOR SWITCHES	off
BASS, TREBLE CONTROLS	FLAT
LOUDNESS SWITCH	off
LOW, HIGH FILTER SWITCHES	off
MUTING SWITCH	off (0dB)
PRE & MAIN SWITCH	SEPARATED
BALANCE CONTROL	NORMAL
POWER & SPEAKER SWITCHES	off

b) Observe relay located at top of chassis. Turn power on. Relay should be activated, without chattering, about 3 to 5 seconds later.

c) Disconnect lead wires from pins 2 and 4 on PCB W28-007.

d) Connect voltmeter between TP1 and TP2 on PCB W28-007.

e) Adjust VR1 on PCB W28-007 for 0V meter reading.

f) Re-connect lead wires to pin 2.

g) Adjust VR1 on main amplifier W23-009 for 0V meter reading.

h) Re-connect lead wire to pin 4.

i) Adjust VR2 on main amplifier PCB W23-009 to obtain 0V meter reading.

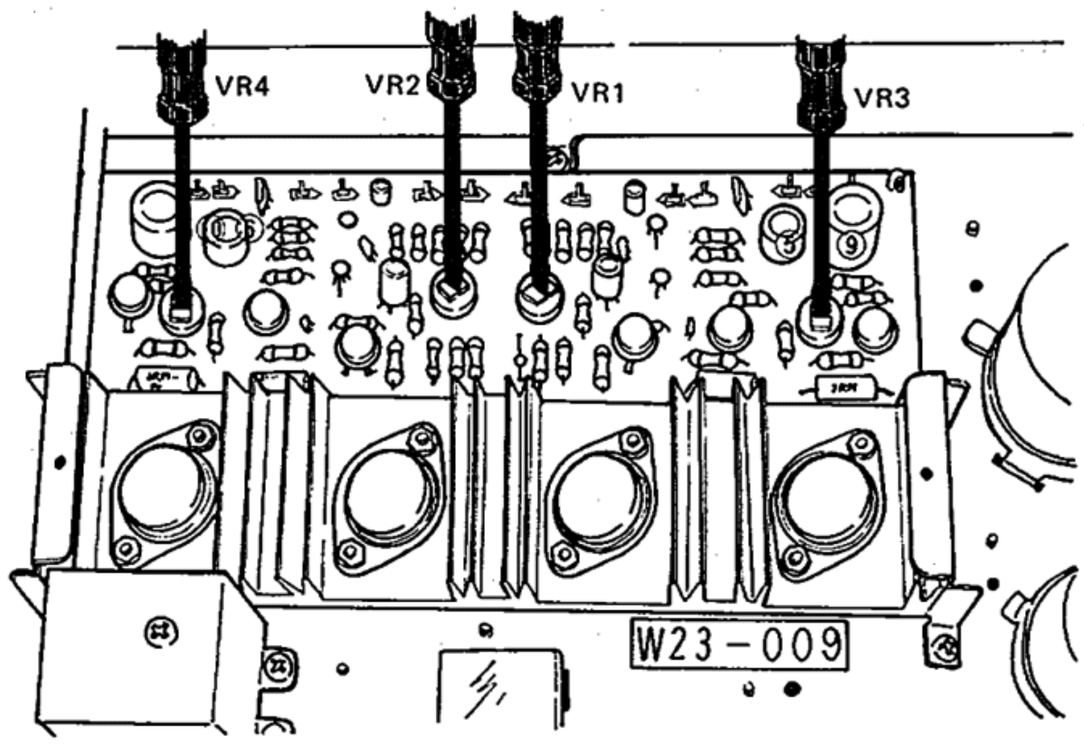

Fig. 2

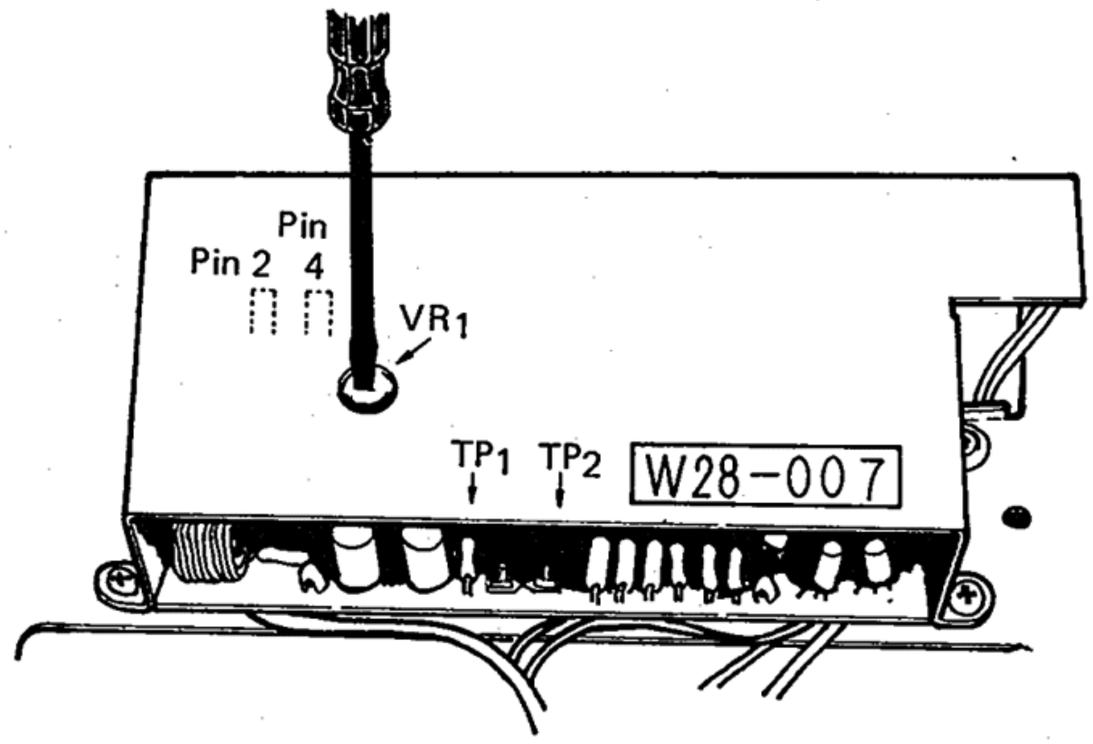

Fig. 3

6-2 IDLE CURRENT ADJUSTMENT

a) Set all controls as in 6-1 (a). Then:
- Connect AC cord to AC outlet.
- Set POWER on and SPEAKER SELECTOR to SPKR A position.
- Allow a few minutes for amplifier to warm up.

b) Set voltmeter near 0.5V full scale range, connect between pins 5 and 9 on PCB W23-009.

c) Adjust VR3 to obtain meter reading of 0.1V ±20%.

d) Connect voltmeter between pins 6 and 10.

e) Adjust VR4 as in step (c).

www.hifiengine.com

7 • SCHEMATIC DIAGRAMS AND PCB PATTERNS

UNIT CONNECTION DIAGRAM

SA-800

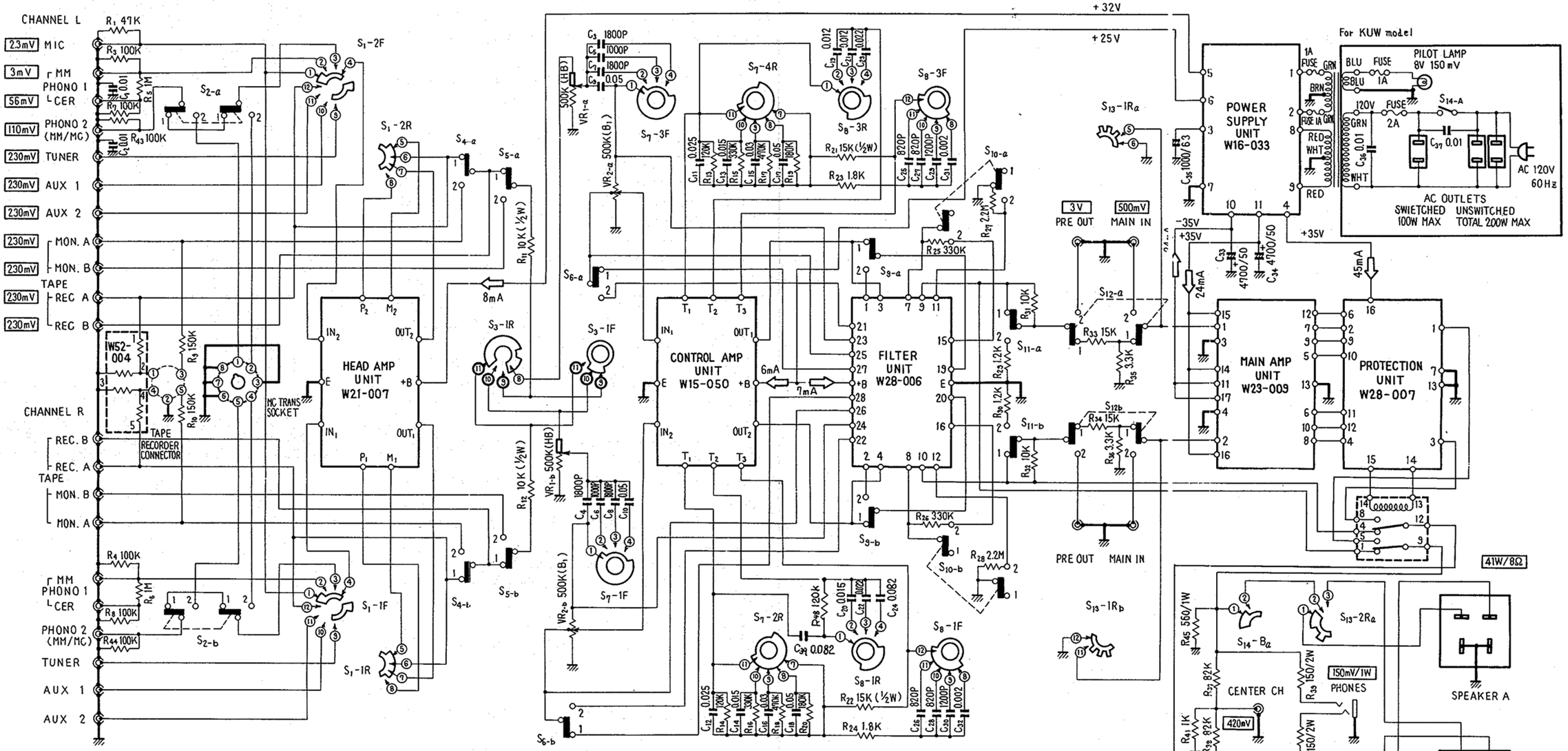

SWITCHES

S_1	INPUT SELECTOR	1. MIC 2. PHONO 1 3. PHONO 2 4. TUNER 5. AUX 1 6. AUX 2
S_2	PHONO 2 SELECTOR	1. MM 2. MC
S_3	MODE SELECTOR	1. REV 2. NORM 3. L 4. R 5. L+R
S_4	TAPE MONITOR 1 SW.	1. OFF 2. ON
S_5	TAPE MONITOR 2 SW.	1. OFF 2. ON
S_6	LOUDNESS SW.	1. OFF 2. ON
S_7	BASS CONTROL	-9dB~+12dB (at 100Hz)
S_8	TREBLE CONTROL	-12dB~+9dB (at 10kHz)
S_9	LOW FILTER SW.	1. OFF 2. ON
S_{10}	HIGH FILTER SW.	1. OFF 2. ON
S_{11}	MUTING SW.	1. OFF 2. -20dB
S_{12}	PRE & MAIN SW.	1. INTERCOUPLED 2. SEPARATED
S_{13}	OUTPUT SELECTOR	1. OFF 2. A 3. B 4. A+B
S_{14}	POWER SW.	1. OFF 2. ON
S_{15}	RELAY	1. OFF 2. ON

POTENTIOMETERS

VR_1 BALANCE CONTROL
VR_2 VOLUME CONTROL

RESISTORS

NON MARK: OHM
K : KILOHM
M : MEGOHM

CAPACITORS

NON MARK : μF
P : μμF

V : SIGNAL VOLTAGE AT 41W/8Ω (at 1kHz)
V : DC VOLTAGE AT NO INPUT SIGNAL
⇨ : DC CURRENT AT NO INPUT SIGNAL

POWER SUPPLY CIRCUITS

For FVW model

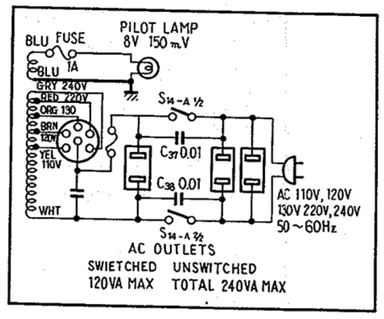

For KCW model

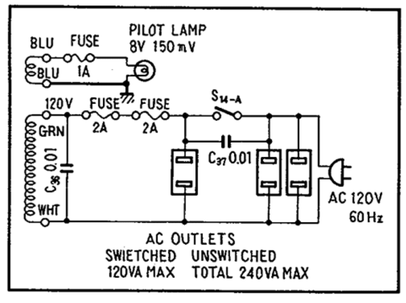

www.hifiengine.com

HEAD AMP UNIT (W21-007)

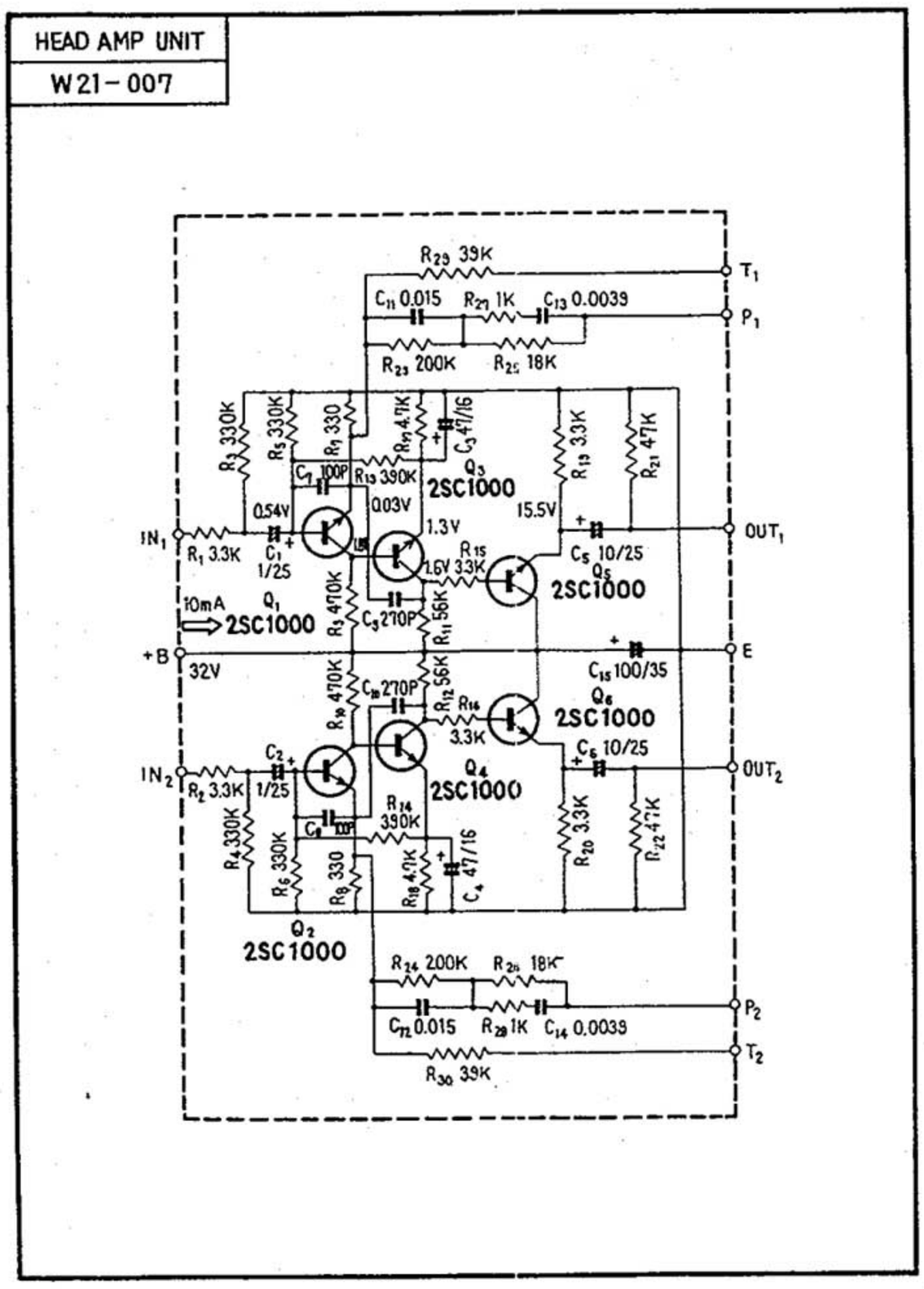

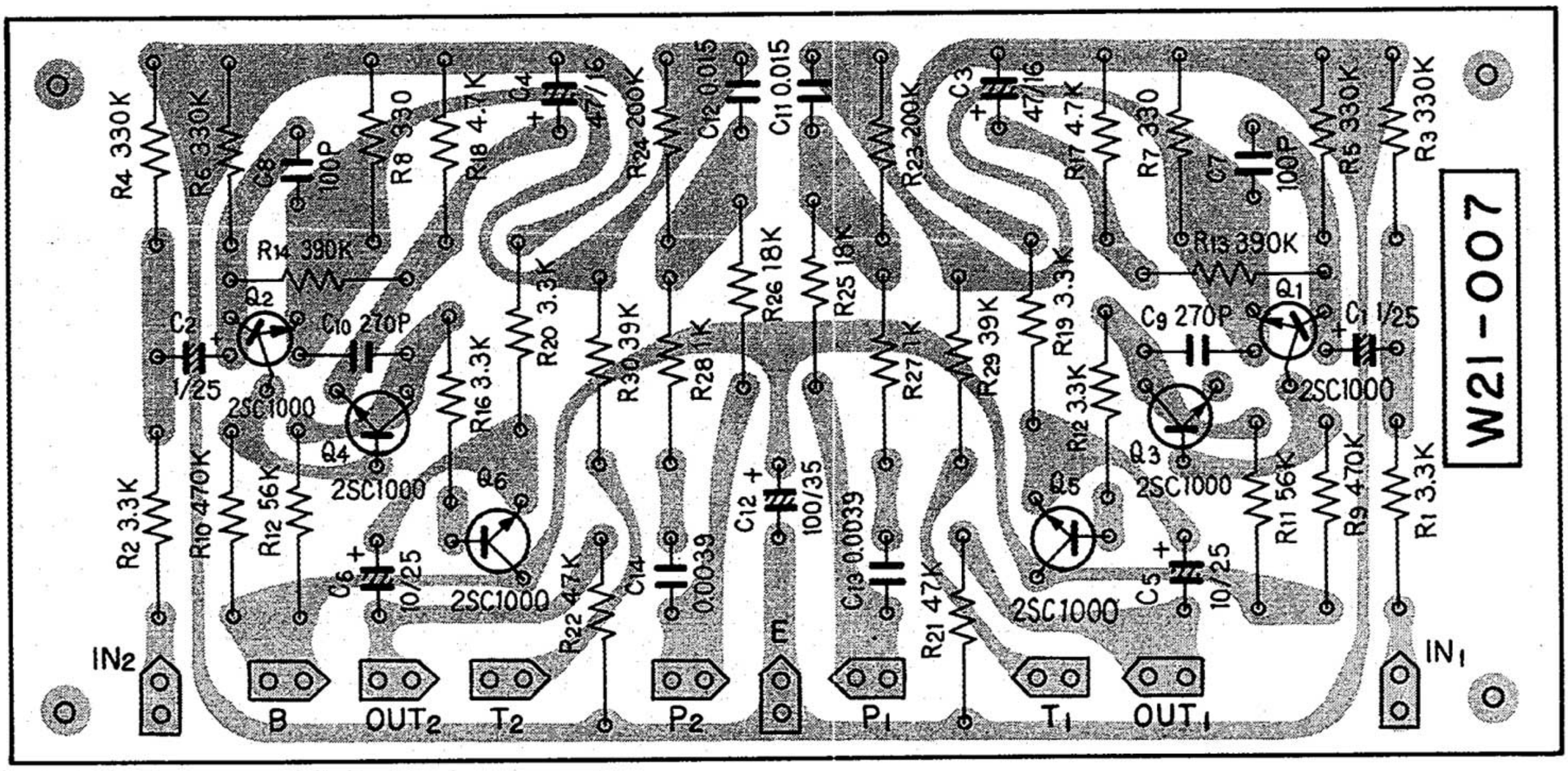

www.hifiengine.com

CONTROL AMP UNIT (W15-050)

CONTROL AMP UNIT
W15 - 050

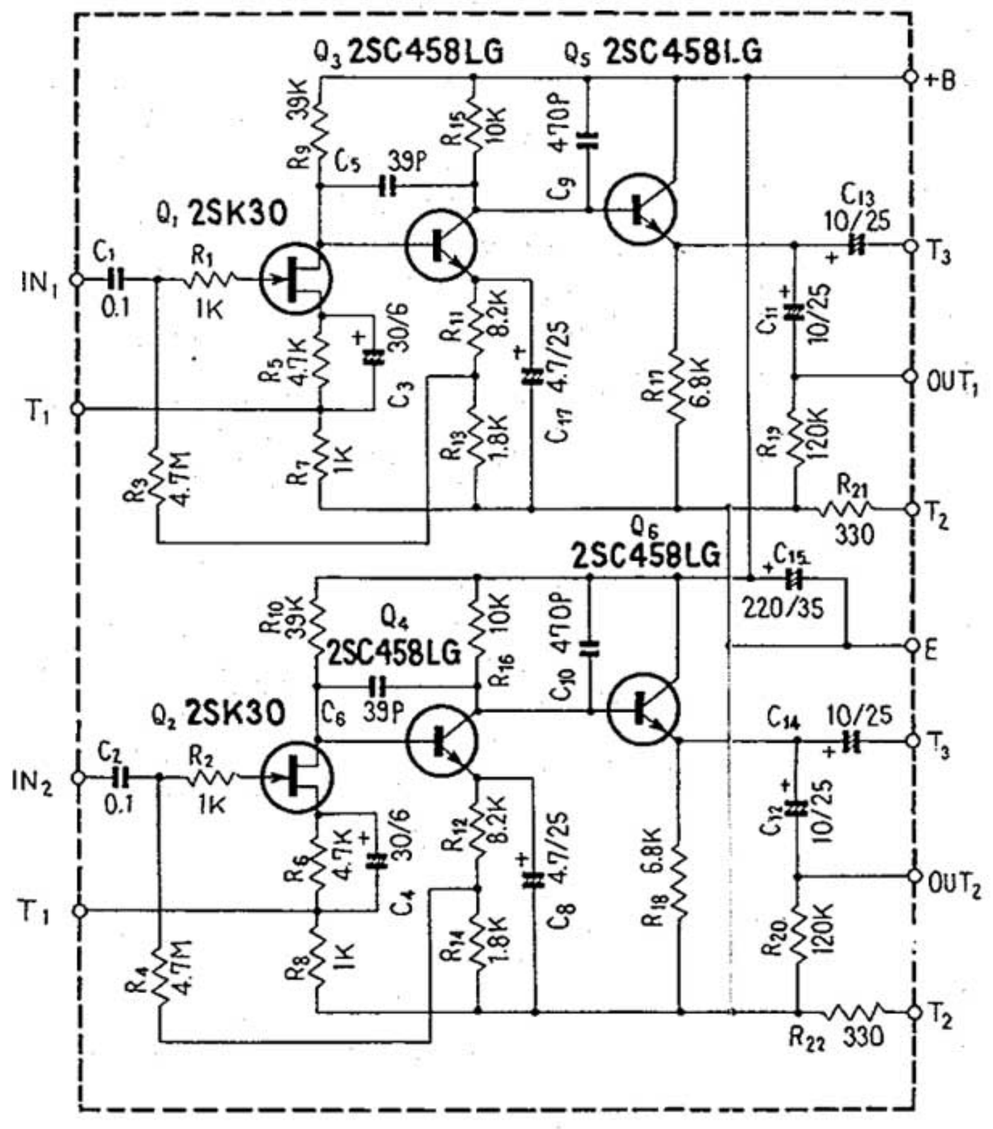

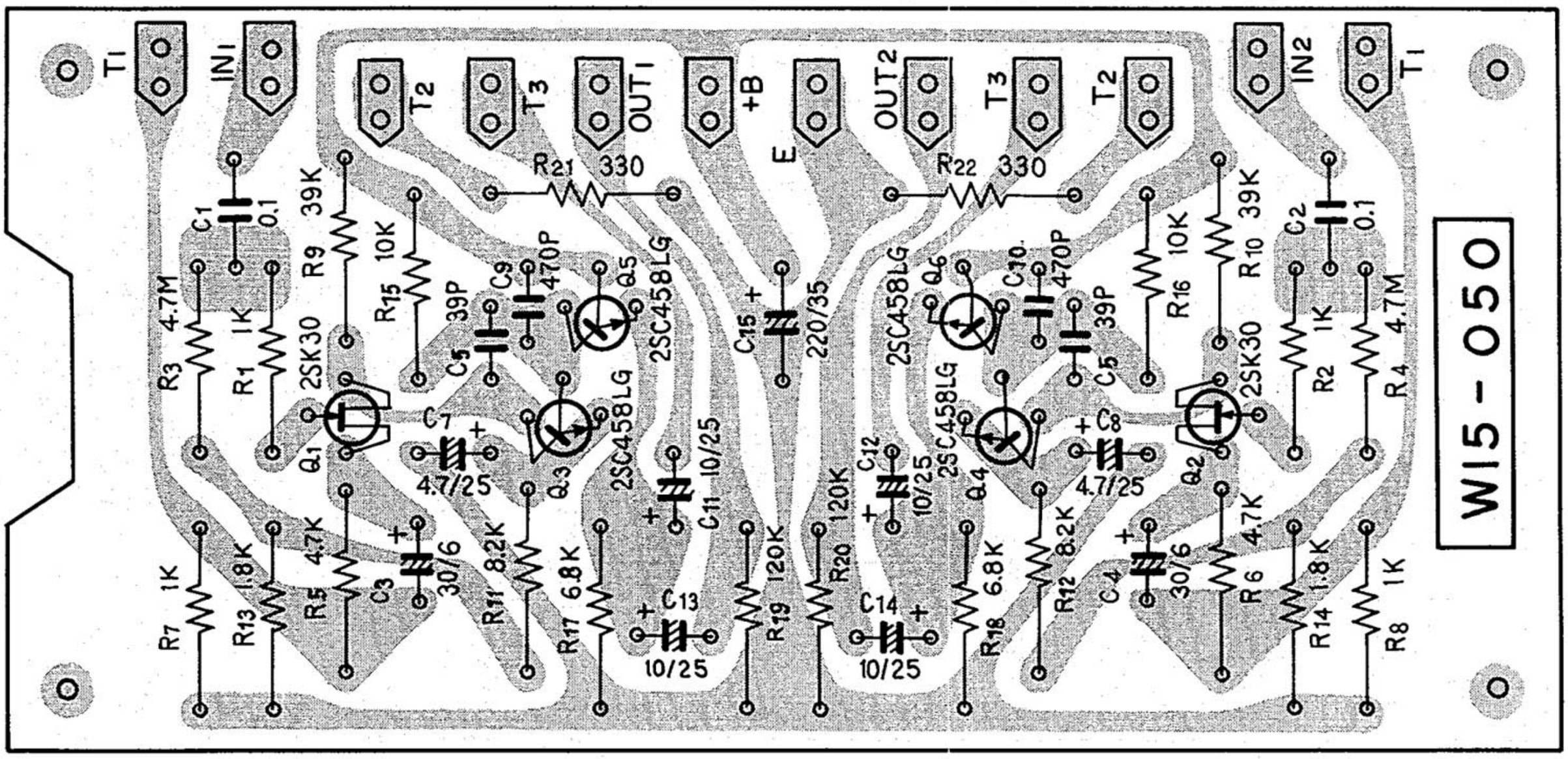

www.hifiengine.com

FILTER UNIT (W28-006)

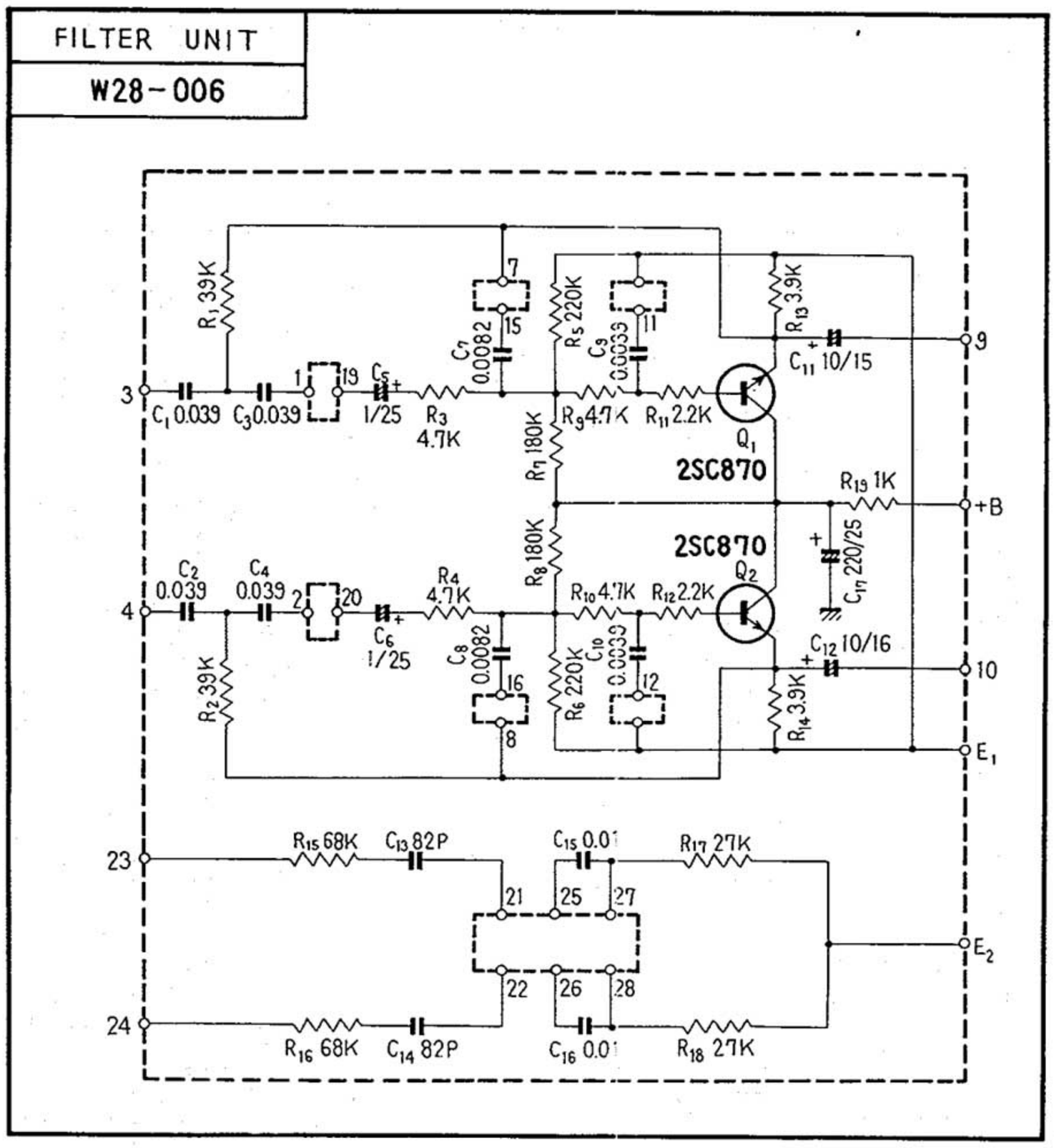

www.hifiengine.com

MAIN AMP UNIT (W23-009)

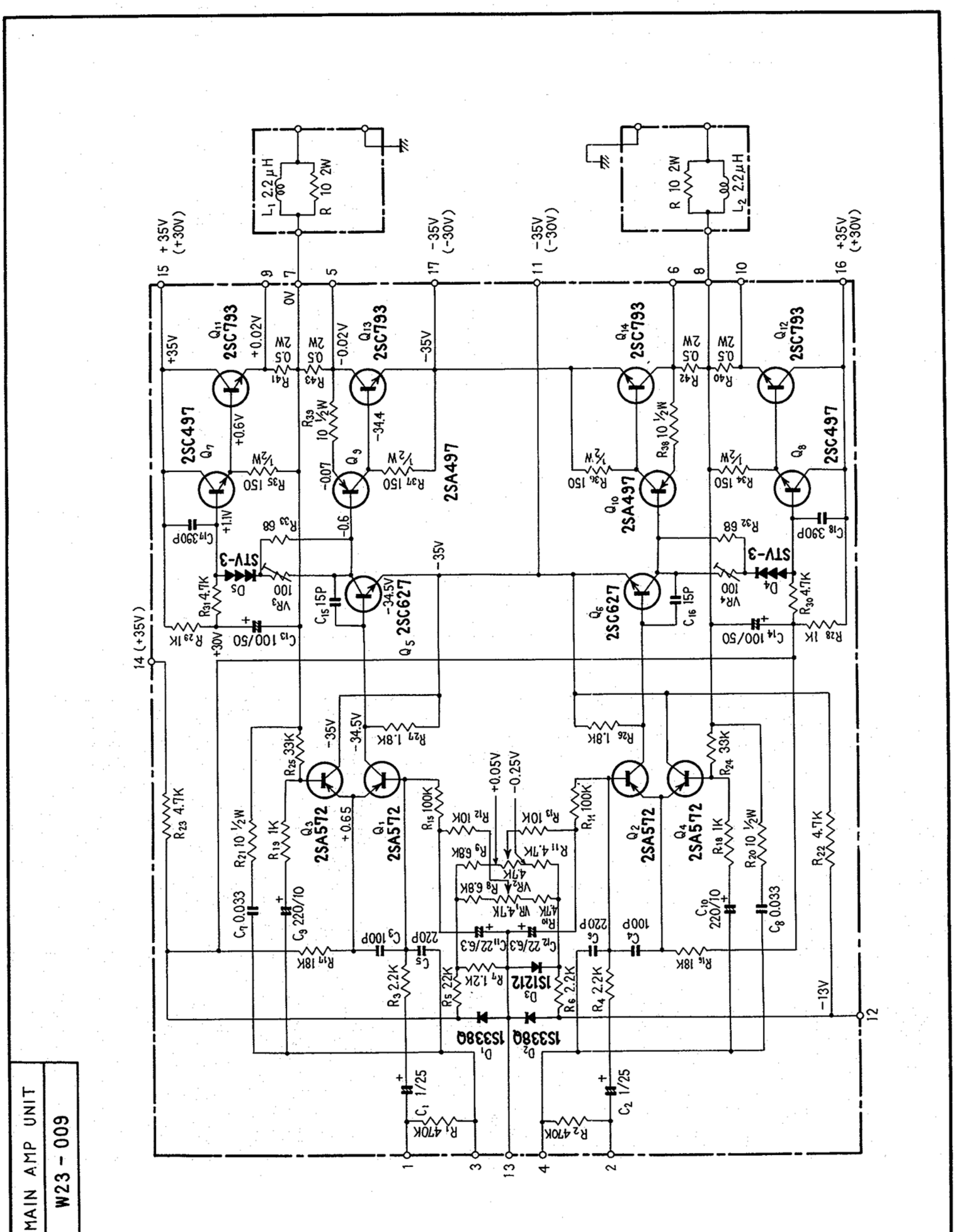

www.hifiengine.com

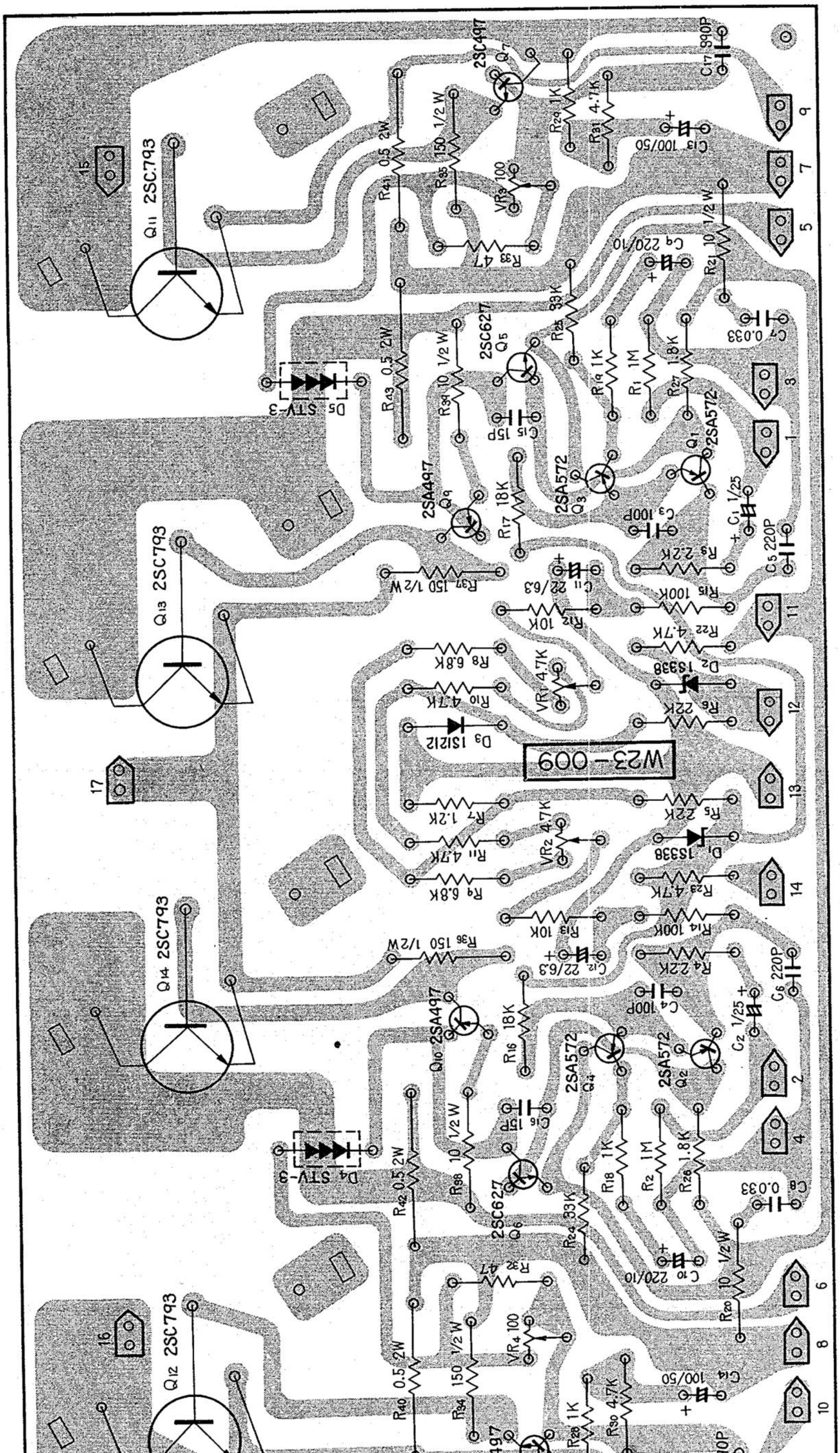

www.hifiengine.com

POWER SUPPLY UNIT (W16-033)

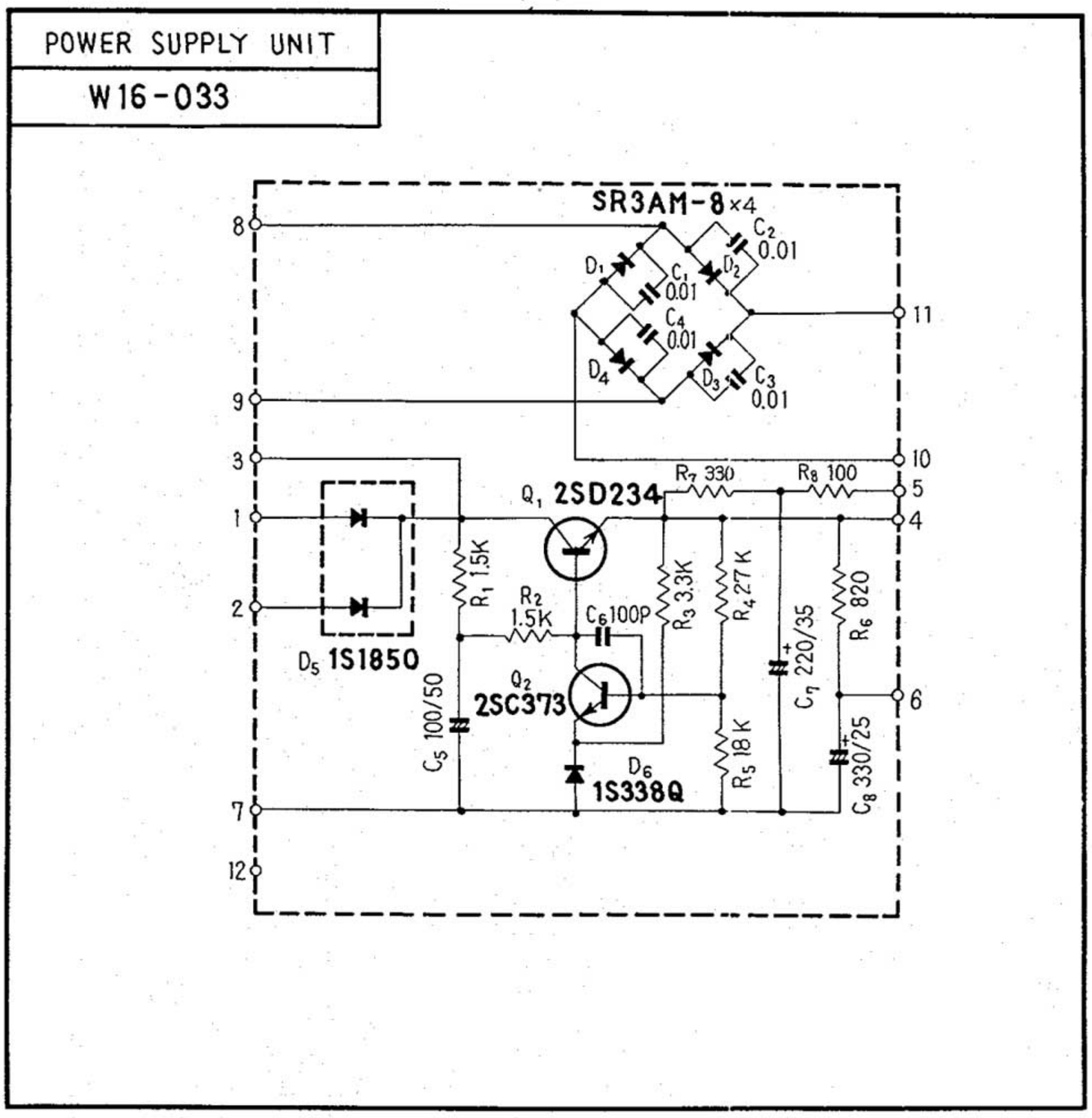

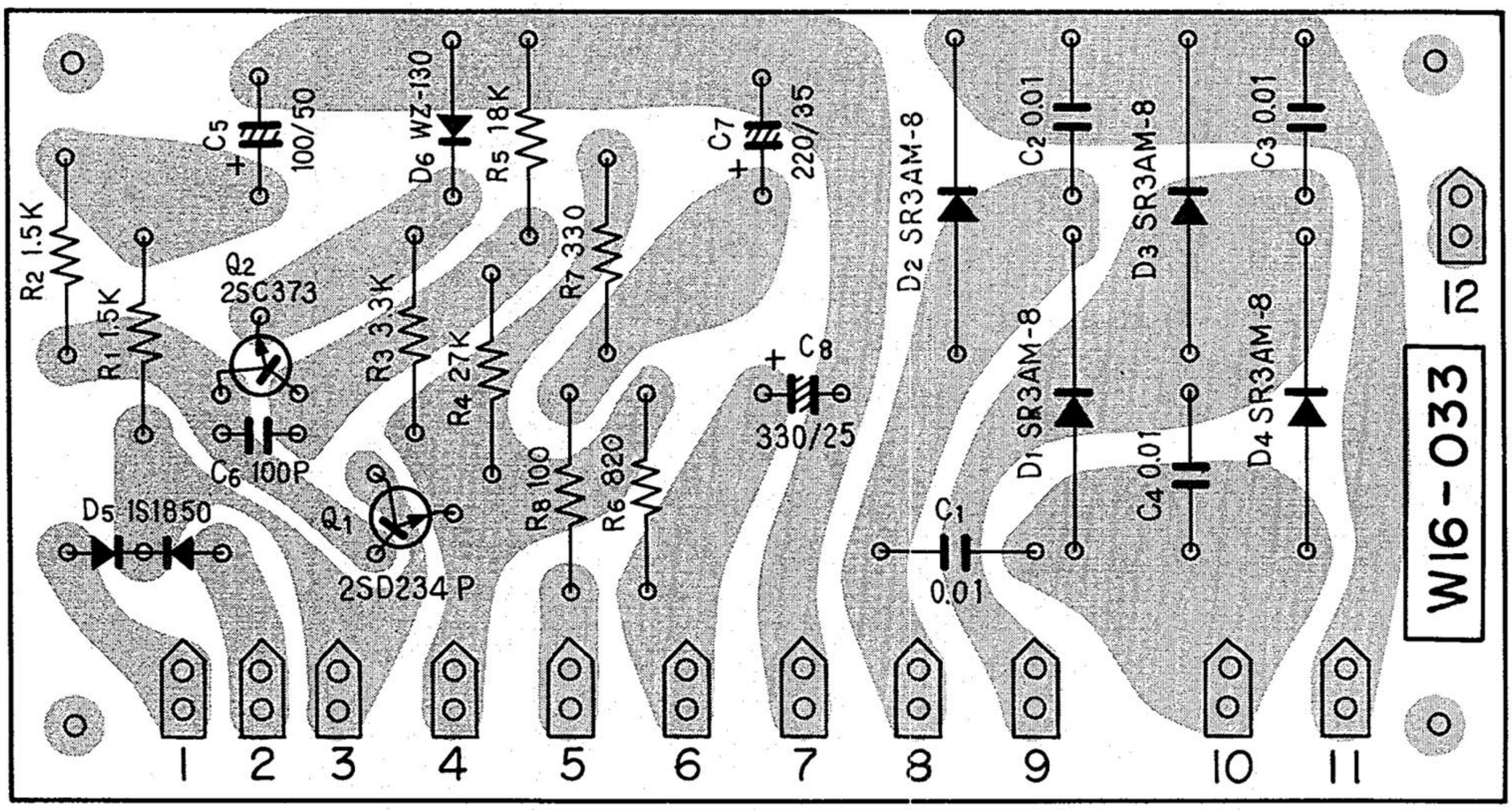

www.hifiengine.com

PROTECTOR UNIT (W28-007)

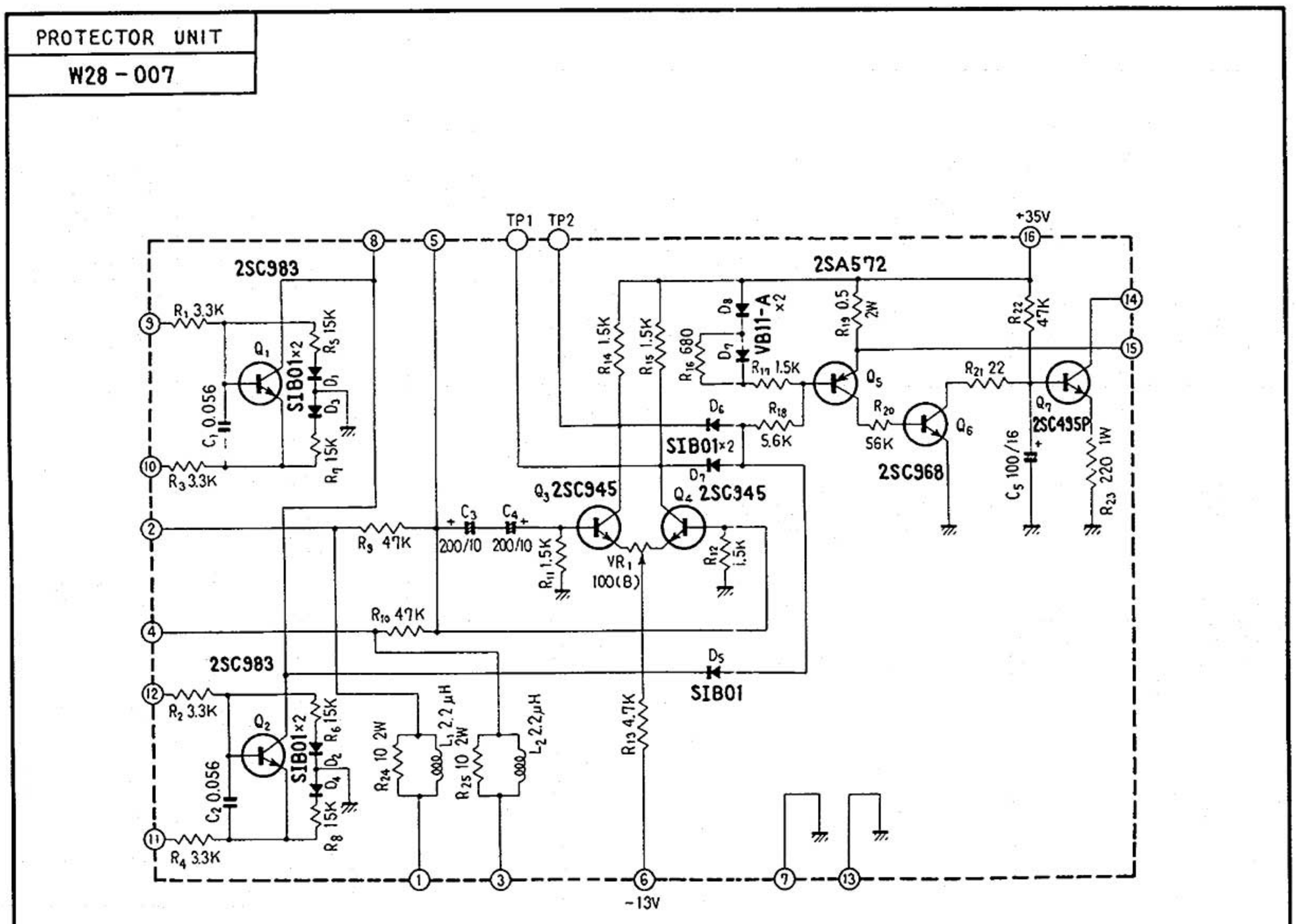

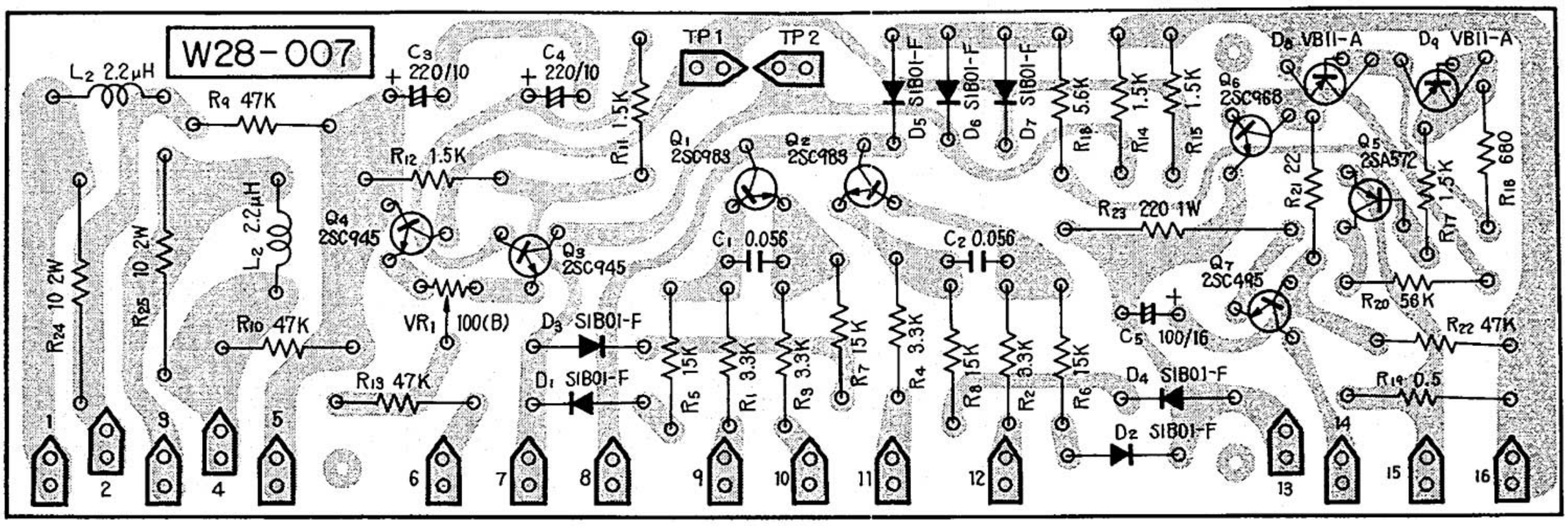

www.hifiengine.com

8 • PARTS LIST

MISCELLANEOUS

NOTE

This parts list is for the FVW model, the KUW or KCW model uses some different parts as following pages:

for KUW model ..... page 25
for KCW model ..... page 28

CAPACITORS

IN μF UNLESS OTHERWISE NOTED, p: $\mu\mu$F.

Symbol	Description			Part No.	
C1	Ceramic	0.01	50V	CKDYF 103Z 50	
C2	Ceramic	0.01	50V	CKDYF 103Z 50	
C3	Styrol	0.0018	50V	CQSA 182K 50	
C4	Styrol	0.0018	50V	CQSA 182K 50	
C5	Styrol	0.001	50V	CQSA 102K 50	
C6	Styrol	0.001	50V	CQSA 102K 50	
C7	Styrol	0.0018	50V	CQSA 182K 50	
C8	Styrol	0.0018	50V	CQSA 182K 50	
C9	Mylar	0.05	50V	CQMA 503K 50	
C10	Mylar	0.05	50V	CQMA 503K 50	
C11	Mylar	0.025	50V	CQMA 253K 50	
C12	Mylar	0.025	50V	CQMA 253K 50	
C13	Mylar	0.015	50V	CQMA 153K 50	
C14	Mylar	0.015	50V	CQMA 153K 50	
C15	Mylar	0.03	50V	CQMA 303K 50	
C16	Mylar	0.03	50V	CQMA 303K 50	
C17	Mylar	0.05	50V	CQMA 503K 50	
C18	Mylar	0.05	50V	CQMA 503K 50	
C19	Mylar	0.015	50V	CQMA 153K 50	
C20	Mylar	0.015	50V	CQMA 153K 50	
C21	Mylar	0.022	50V	CQMA 223K 50	
C22	Mylar	0.022	50V	CQMA 223K 50	
C23	Mylar	0.082	50V	CQMA 823K 50	
C24	Mylar	0.082	50V	CQMA 823K 50	
C25	Styrol	820p	50V	CQSA 821K 50	
C26	Styrol	820p	50V	CQSA 821K 50	
C27	Styrol	820p	50V	CQSA 821K 50	
C28	Styrol	820p	50V	CQSA 821K 50	
C29	Styrol	0.0012	50V	CQSA 122K 50	
C30	Styrol	0.0012	50V	CQSA 122K 50	
C31	Mylar	0.002	50V	CQMA 202K 50	
C32	Mylar	0.002	50V	CQMA 202K 50	
C33	Electrolytic	4700	50V	C52-088-B	
C34	Electrolytic	4700	50V	C52-088-B	
C35	Electrolytic	1000	63V	ACH-001-B	
C36	Ceramic	0.01	DC 1.4kV	C43-003-0	
C37	Ceramic	0.01	DC 1.4kV	C43-003-0	
C38	Ceramic	0.01	DC 1.4kV	C43-003-0	
C39	Mylar	0.082	50V	CQMA 823K 50	
C40	Mylar	0.082	50V	CQMA 823K 50	

RESISTORS

IN Ω, ¼W UNLESS OTHERWISE NOTED, k: kΩ, M: MΩ.

Symbol	Description			Part No.	
R1	Carbon film	47k		RD¼PS 473K	
R3	Carbon film	100k		RD¼PS 104K	
R4	Carbon film	100k		RD¼PS 104K	
R5	Carbon film	1M		RD¼PS 105K	
R6	Carbon film	1M		RD¼PS 105K	
R7	Carbon film	100k		RD¼PS 104K	
R8	Carbon film	100k		RD¼PS 104K	
R9	Carbon film	150k		RD¼PS 154K	
R10	Carbon film	150k		RD¼PS 154K	
R11	Carbon film	10k	½W	RD½PW 103K	

www.hifiengine.com

Symbol	Description			Part No.	
R12	Carbon film	10k	½W	RD½PW 103K	
R13	Carbon film	120k		RD¼PS 124K	
R14	Carbon film	120k		RD¼PS 124K	
R15	Carbon film	330k		RD¼PS 334K	
R16	Carbon film	330k		RD¼PS 334K	
R17	Carbon film	470K		RD¼PS 474K	
R18	Carbon film	470k		RD¼PS 474K	
R19	Carbon film	180k		RD¼PS 184K	
R20	Carbon film	180k		RD¼PS 184K	
R21	Carbon film	15k	½W	RD½PW 153K	
R22	Carbon film	15k	½W	RD½PW 153K	
R23	Carbon film	1.8k	½W	RD½PW 182K	
R24	Carbon film	1.8k	½W	RD½PW 182K	
R25	Carbon film	330k		RD¼PS 334K	
R26	Carbon film	330k		RD¼PS 334K	
R27	Carbon film	2.2M		RD¼PS 225K	
R28	Carbon film	2.2M		RD¼PS 225K	
R29	Carbon film	1.2k		RD¼PS 122K	
R30	Carbon film	1.2k		RD¼PS 122K	
R31	Carbon film	10k		RD¼PS 103K	
R32	Carbon film	10k		RD¼PS 103K	
R33	Carbon film	15k		RD¼PS 153K	
R34	Carbon film	15k		RD¼PS 153K	
R35	Carbon film	3.3k		RD¼PS 332K	
R36	Carbon film	3.3k		RD¼PS 332K	
R37	Carbon film	82k		RD¼PS 823K	
R38	Carbon film	82k		RD¼PS 823K	
R39	Wire wound	150	2W	RM2P 151K	
R40	Wire wound	150	2W	RM2P 151K	
R41	Carbon film	1k		RD¼PS 102K	
R43	Carbon film	100k		RD¼PS 104K	
R44	Carbon film	100k		RD¼PS 104K	

Symbol	Description			Part No.	
R45	Metal oxide	560	1W	RS1P 561K	
R46	Metal oxide	560	1W	RS1P 561K	
R47	Carbon film	120k		RD¼PS 124K	
R48	Carbon film	120k		RD¼PS 124K	

SWITCHES

Symbol	Description	Part No.	
S1	SELECTOR Switch	S13-045-0	
S2	PHONO 2 SELECTOR	S42-016-A	
S3	MODE Switch	S14-035-0	
S4	TAPE MONITOR 1 Switch	S42-011-A	
S5	TAPE MONITOR 2 Switch	S42-011-A	
S6	LOUDNESS Switch	S42-012-A	
S7	BASS Switch	S16-054-A	
S8	TREBLE Switch	S16-046-A	
S9	LOW FILTER	S42-012-A	
S10	HIGH FILTER	S42-016-A	
S11	MUTING Switch	S42-012-A	
S12	PRE & MAIN Switch	S41-025-0	
S13	OUTPUT SELECTOR	S12-011-B	
S14	POWER Switch	S11-024-B	
S15	Relay	S61-006-0	

POTENTIOMETERS

Symbol	Description	Part No.	
VR1	500k dual, BALANCE	C85-048-B	
VR2	500k dual, VOLUME	C85-054-0	

www.hifiengine.com

OTHERS

Symbol	Description	Part No.	
	Head amp unit	W21-007-A	
	Control amp unit	W15-050-C	
	Filter unit	W28-006-A	
	Main amp unit	W23-009-A	
	Power supply unit	W16-033-A	
	Protector unit	W28-007-A	
	Front panel Ass'y	ANB-062-0	
	Wooden case	M52-139-C	
	Foot	AEC-012-0	
	Knob for VOLUME, MODE and SELECTOR	A12-229-A	
	Knob for POWER, BASS, TREBLE, SPEAKERS and BALANCE	A12-232-A	
	Knob for MUTING, FILTERS, TAPE MONITORS and PHONO 2	A19-095-A	
	1P Input terminal board	K21-005-C	
	4P Input terminal board	K21-010-E	
	6P Input terminal board	K22-013-D	
	Power transformer	ATT-020-A	
	Compound part for REC terminal	W52-004-0	
	5P Connector (DIN type)	K93-003-B	
	Speaker socket	K72-031-0	
	Pilot lamp socket	K42-003-A	
	Headphones jack	K72-026-0	
	Microphone jack	K72-024-0	
	8P Socket for MC transformer	K24-002-A	
	Fuse holder	AKR-001-0	
	Spare AC outlet	K82-012-A	
	Spare AC outlet (2P)	K82-014-0	

Symbol	Description	Part No.	
	Pilot lamp	E22-020-0	
	Fuse 1A	E21-004-0	
	Fuse 1A, for protection	E21-020-0	
	4P Ground terminal	K13-047-0	
	Screw, to fix wooden case	B11-015-B	
	AC Power cord	D11-002-B	
	Operating instructions	ARB-010-0	
	Pin Plug	K72-018-0	
	Speaker Plug	K72-007-0	
	Packing case	AHD-019-0	
	Protector for packing	H11-070-B	
	Connection cord (white)	D51-003-B	
	Connection cord (red)	D51-004-B	

www.hifiengine.com

for KUW model

CAPACITORS

Symbol	Description			Part No.	
C1	Ceramic	0.01	50V	CKDYF 103Z 50	
C2	Ceramic	0.01	50V	CKDYF 103Z 50	
C3	Styrol	0.0018	50V	CQSA 182K 50	
C4	Styrol	0.0018	50V	CQSA 182K 50	
C5	Styrol	0.001	50V	CQSA 102K 50	
C6	Styrol	0.001	50V	CQSA 102K 50	
C7	Styrol	0.0018	50V	CQSA 182K 50	
C8	Styrol	0.0018	50V	CQSA 182K 50	
C9	Mylar	0.05	50V	CQMA 503K 50	
C10	Mylar	0.05	50V	CQMA 503K 50	
C11	Mylar	0.025	50V	CQMA 253K 50	
C12	Mylar	0.025	50V	CQMA 253K 50	
C13	Mylar	0.015	50V	CQMA 153K 50	
C14	Mylar	0.015	50V	CQMA 153K 50	
C15	Mylar	0.03	50V	CQMA 303K 50	
C16	Mylar	0.03	50V	CQMA 303K 50	
C17	Mylar	0.05	50V	CQMA 503K 50	
C18	Mylar	0.05	50V	CQMA 503K 50	
C19	Mylar	0.015	50V	CQMA 153K 50	
C20	Mylar	0.015	50V	CQMA 153K 50	
C21	Mylar	0.022	50V	CQMA 223K 50	
C22	Mylar	0.022	50V	CQMA 223K 50	
C23	Mylar	0.082	50V	CQMA 823K 50	
C24	Mylar	0.082	50V	CQMA 823K 50	
C25	Styrol	820p	50V	CQSA 821K 50	
C26	Styrol	820p	50V	CQSA 821K 50	
C27	Styrol	820p	50V	CQSA 821K 50	
C28	Styrol	820p	50V	CQSA 821K 50	
C29	Styrol	0.0012	50V	CQSA 122K 50	
C30	Styrol	0.0012	50V	CQSA 122K 50	
C31	Mylar	0.002	50V	CQMA 202K 50	
C32	Mylar	0.002	50V	CQMA 202K 50	
C33	Electrolytic	4700	50V	C52-088-B	
C34	Electrolytic	4700	50V	C52-088-B	
C35	Electrolytic	1000	63V	ACH-001-B	
C36	Oil	0.01	800V	ACE-001-A	
C37	Ceramic	0.01	DC 1.4kV	C43-003-0	

RESISTORS

Symbol	Description			Part No.	
R1	Carbon film	47k		RD¼PS 473K	
R3	Carbon film	100k		RD¼PS 104K	
R4	Carbon film	100k		RD¼PS 104K	
R5	Carbon film	1M		RD¼PS 105K	
R6	Carbon film	1M		RD¼PS 105K	
R7	Carbon film	100k		RD¼PS 104K	
R8	Carbon film	100k		RD¼PS 104K	
R9	Carbon film	150k		RD¼PS 154K	
R10	Carbon film	150k		RD¼PS 154K	
R11	Carbon film	10k	½W	RD½PW 103K	
R12	Carbon film	10k	½W	RD½PW 103K	
R13	Carbon film	120k		RD¼PS 124K	
R14	Carbon film	120k		RD¼PS 124K	
R15	Carbon film	330k		RD¼PS 334K	
R16	Carbon film	330k		RD¼PS 334K	

www.hifiengine.com

Symbol	Description			Part No.	
R17	Carbon film	470K		RD¼PS 474K	
R18	Carbon film	470k		RD¼PS 474K	
R19	Carbon film	180k		RD¼PS 184K	
R20	Carbon film	180k		RD¼PS 184K	
R21	Carbon film	15k	½W	RD½PW 153K	
R22	Carbon film	15k	½W	RD½PW 153K	
R23	Carbon film	1.8k	½W	RD½PW 182K	
R24	Carbon film	1.8k	½W	RD½PW 182K	
R25	Carbon film	330k		RD¼PS 334K	
R26	Carbon film	330k		RD¼PS 334K	
R27	Carbon film	2.2M		RD¼PS 225K	
R28	Carbon film	2.2M		RD¼PS 225K	
R29	Carbon film	1.2k		RD¼PS 122K	
R30	Carbon film	1.2k		RD¼PS 122K	
R31	Carbon film	10k		RD¼PS 103K	
R32	Carbon film	10k		RD¼PS 103K	
R33	Carbon film	15k		RD¼PS 153K	
R34	Carbon film	15k		RD¼PS 153K	
R35	Carbon film	3.3k		RD¼PS 332K	
R36	Carbon film	3.3k		RD¼PS 332K	
R37	Carbon film	82k		RD¼PS 823K	
R38	Carbon film	82k		RD¼PS 823K	
R39	Wire wound	150	2W	RM2P 151K	
R40	Wire wound	150	2W	RM2P 151K	
R41	Carbon film	1k		RD¼PS 102K	
R43	Carbon film	100k		RD¼PS 104K	
R44	Carbon film	100k		RD¼PS 104K	
R45	Wire wound	560	1W	RS1P 561K	
R46	Wire wound	560	1W	RS1P 561K	
R47	Carbon film	120k		RD¼PS 124K	
R48	Carbon film	120k		RD¼PS 124K	

SWITCHES

Symbol	Description	Part No.	
S1	SELECTOR Switch	S13-045-0	
S2	PHONO 2 SELECTOR	S42-016-A	
S3	MODE Switch	S14-035-0	
S4	TAPE MONITOR 1 Switch	S42-011-A	
S5	TAPE MONITOR 2 Switch	S42-011-A	
S6	LOUDNESS Switch	S42-012-A	
S7	BASS Switch	S16-054-A	
S8	TREBLE Switch	S16-046-A	
S9	LOW FILTER	S42-012-A	
S10	HIGH FILTER	S42-016-A	
S11	MUTING Switch	S42-012-A	
S12	PRE & MAIN Switch	S41-025-0	
S13	OUTPUT SELECTOR	S12-011-B	
S14	POWER Switch	ASA-007-0	
S15	Relay	S61-006-0	

POTENTIOMETERS

Symbol	Description	Part No.	
VR1	500k dual, BALANCE	C85-048-B	
VR2	500k dual, VOLUME	C85-054-0	

www.hifiengine.com

OTHERS

Symbol	Description	Part No.	
	Head amp unit	W21-007-A	
	Control amp unit	W15-050-C	
	Filter unit	W28-006-A	
	Main amp unit	W23-009-A	
	Power supply unit	W16-033-A	
	Protector unit	W28-007-A	
	Front panel Ass'y	ANB-062-0	
	Wooden case	M52-139-C	
	Foot	AEC-012-0	
	Knob for VOLUME, MODE and SELECTOR	A12-229-A	
	Knob for POWER, BASS, TREBLE, SPEAKERS and BALANCE	A12-232-A	
	Knob for MUTING, FILTERS, TAPE MONITORS and PHONO 2	A19-095-A	
	1P Input terminal board	K21-005-C	
	4P Input terminal board	K21-010-E	
	6P Input terminal board	K22-013-D	
	Power transformer	ATT-019-A	
	Compound part for REC terminal	W52-004-0	
	5P Connector (DIN type)	K93-003-B	
	Speaker socket	K72-031-0	
	Pilot lamp socket	K42-003-A	
	Headphones jack	K72-026-0	
	Microphone jack	K72-024-0	
	8P Socket for MC transformer	K24-002-A	
	Fuse holder	K96-007-B	
	Spare AC outlet	AKP-002-0	
	Pilot lamp	E22-020-0	

Symbol	Description	Part No.	
	Fuse 2A	E21-027-0	
	Fuse 1A, for protection	AEK-004-0	
	Fuse 3A	E21-006-0	
	Screw, to fix wooden case	B11-015-B	
	AC Power cord	D11-003-E	
	Operating instructions	ARB-011-0	
	Pin plug	K72-015-A	
	Speaker plug	K72-007-B	
	Packing case	AHD-029-0	
	Protector for packing	H11-070-B	
	4P Ground terminal	K13-047-0	
	Washer (Square)	M52-010-0	
	Connection cord (white)	D51-003-B	
	Connection cord (red)	D51-004-B	

www.hifiengine.com

for KCW model

CAPACITORS

Symbol	Description			Part No.	
C1	Ceramic	0.01	50V	CKDYF 103Z 50	
C2	Ceramic	0.01	50V	CKDYF 103Z 50	
C3	Styrol	0.0018	50V	CQSA 182K 50	
C4	Styrol	0.0018	50V	CQSA 182K 50	
C5	Styrol	0.001	50V	CQSA 102K 50	
C6	Styrol	0.001	50V	CQSA 102K 50	
C7	Styrol	0.0018	50V	CQSA 182K 50	
C8	Styrol	0.0018	50V	CQSA 182K 50	
C9	Mylar	0.05	50V	CQMA 503K 50	
C10	Mylar	0.05	50V	CQMA 503K 50	
C11	Mylar	0.025	50V	CQMA 253K 50	
C12	Mylar	0.025	50V	CQMA 253K 50	
C13	Mylar	0.015	50V	CQMA 153K 50	
C14	Mylar	0.015	50V	CQMA 153K 50	
C15	Mylar	0.03	50V	CQMA 303K 50	
C16	Mylar	0.03	50V	CQMA 303K 50	
C17	Mylar	0.05	50V	CQMA 503K 50	
C18	Mylar	0.05	50V	CQMA 503K 50	
C19	Mylar	0.015	50V	CQMA 153K 50	
C20	Mylar	0.015	50V	CQMA 153K 50	
C21	Mylar	0.022	50V	CQMA 223K 50	
C22	Mylar	0.022	50V	CQMA 223K 50	
C23	Mylar	0.082	50V	CQMA 823K 50	
C24	Mylar	0.082	50V	CQMA 823K 50	
C25	Styrol	820p	50V	CQSA 821K 50	
C26	Styrol	820p	50V	CQSA 821K 50	
C27	Styrol	820p	50V	CQSA 821K 50	
C28	Styrol	820p	50V	CQSA 821K 50	
C29	Styrol	0.0012	50V	CQSA 122K 50	
C30	Styrol	0.0012	50V	CQSA 122K 50	
C31	Mylar	0.002	50V	CQMA 202K 50	
C32	Mylar	0.002	50V	CQMA 202K 50	
C33	Electrolytic	4700	50V	C52-088-B	
C34	Electrolytic	4700	50V	C52-088-B	
C35	Electrolytic	1000	63V	ACH-001-B	
C36	Oil paper	0.01	800V	C15-001-0	
C37	Ceramic	0.01	DC 1.4kV	C43-003-0	
C38	Mylar	0.082	50V	CQMA 823K 50	
C39	Mylar	0.082	50V	CQMA 823K 50	

RESISTORS

Symbol	Description			Part No.	
R1	Carbon film	47k		RD¼PS 473K	
R3	Carbon film	100K		RD¼PS 104K	
R4	Carbon film	100k		RD¼PS 104K	
R5	Carbon film	1M		RD¼PS 105K	
R6	Carbon film	1M		RD¼PS 105K	
R7	Carbon film	100k		RD¼PS 104K	
R8	Carbon film	100k		RD¼PS 104K	
R9	Carbon film	150k		RD¼PS 154K	
R10	Carbon film	150k		RD¼PS 154K	
R11	Carbon film	10k	½W	RD½PW 103K	

www.hifiengine.com

Symbol	Description			Part No.	
R12	Carbon film	10k	½W	RD½PW 103K	
R13	Carbon film	120k		RD¼PS 124K	
R14	Carbon film	120k		RD¼PS 124K	
R15	Carbon film	330k		RD¼PS 334K	
R16	Carbon film	330k		RD¼PS 334K	
R17	Carbon film	470k		RD¼PS 474K	
R18	Carbon film	470k		RD¼PS 474K	
R19	Carbon film	180k		RD¼PS 184K	
R20	Carbon film	180k		RD¼PS 184K	
R21	Carbon film	15k	½W	RD½PW 153K	
R22	Carbon film	15k	½W	RD½PW 153K	
R23	Carbon film	1.8k	½W	RD½PW 182K	
R24	Carbon film	1.8k	½W	RD½PW 182K	
R25	Carbon film	330k		RD¼PS 334K	
R26	Carbon ilm	330k		RD¼PS 334K	
R27	Carbon film	2.2M		RD¼PS 225K	
R28	Carbon film	2.2M		RD¼PS 225K	
R29	Carbon film	1.2k		RD¼PS 122K	
R30	Carbon film	1.2k		RD¼PS 122K	
R31	Carbon film	10k		RD¼PS 103K	
R32	Carbon film	10k		RD¼PS 103K	
R33	Carbon film	15k		RD¼PS 153K	
R34	Carbon film	15k		RD¼PS 153K	
R35	Carbon film	3.3k		RD¼PS 332K	
R36	Carbon film	3.3k		RD¼PS 332K	
R37	Carbon film	82k		RD¼PS 823K	
R38	Carbon film	82k		RD¼PS 823K	
R39	Metal oxide	150	2W	RS2P 151K	
R40	Metal oxide	150	2W	RS2P 151K	
R41	Carbon film	1k		RD¼PS 102K	

Symbol	Description			Part No.	
R43	Carbon film	100k		RD¼PS 104K	
R44	Carbon film	100k		RD¼PS 104K	
R45	Metal oxide	560	1W	RS1P 561K	
R46	Metal oxide	560	1W	RS1P 561K	
R47	Carbon film	120k		RD¼PS 124K	
R48	Carbon film	120k		RD¼PW 124K	

SWITCHES

Symbol	Description	Part No.	
S1	SELECTOR Switch	S13-045-0	
S2	PHONO 2 SELECTOR	S42-016-A	
S3	MODE Switch	S14-035-0	
S4	TAPE MONITOR 1 Switch	S42-011-A	
S5	TAPE MONITOR 2 Switch	S42-011-A	
S6	LOUDNESS Switch	S42-012-A	
S7	BASS Switch	S16-054-A	
S8	TREBLE Switch	S16-046-A	
S9	LOW FILTER	S42-012-A	
S10	HIGH FILTER	S42-016-A	
S11	MUTING Switch	S42-012-A	
S12	PRE & MAIN Switch	S41-025-0	
S13	OUTPUT SELECTOR	S12-011-B	
S14	POWER Switch	S11-023-B	
S15	Relay	S61-006-0	

www.hifiengine.com

OTHERS

Symbol	Description	Part No.	
	Head Amp Unit	W21-007-A	
	Control Amp Unit	W15-050-C	
	Filter Unit	W28-006-A	
	Main Amp Uit	W23-009-A	
	Power Supply Unit	W16-033-A	
	Protector Unit	W28-007-A	
	Front Panel Ass'y	ANB-062-0	
	Wooden Case	M52-139-C	
	Foot	AEC-012-0	
	Knob for VOLUME, MODE and SELECTOR	A12-229-A	
	Knob for POWER, BASS, TREBLE, SPEAKERS and BALANCE	A12-232-A	
	Knob for MUTING, FILTERS, TAPE MONITORS and PHONO 2	A19-095-A	
	1P Input Terminal Board	K21-005-C	
	4P Input Terminal Board	K21-010-E	
	6P Input Terminal Board	K22-013-D	
	4P Ground Terminal	K13-047-0	
	Power Transformer	ATT-019-A	
	Compound Part for REC Terminal	W52-004-0	
	5P Connector (DIN type)	K93-003-B	
	Speaker Socket	K72-031-0	
	Pilot Lamp Socket	K42-003-A	
	Headphones Jack	K72-026-0	
	Microphone Jack	K72-024-0	
	8P Socket for MC Transformer	K24-002-A	
	Spare AC Outlet	AKP-002-0	
	Spare AC Outlet (2P)	K82-014-0	
	Fuse Holder	K96-007-C	
	Pilot Lamp	E22-020-0	
	Fuse 2A	E21-005-0	
	Fuse 1A for Protection	E21-020-0	
	Fuse 2A for Protection	E21-026-0	
	Screw for Grounding	B11-012-A	
	Screw to fix Wooden Case	B11-015-B	
	AC Power Cord	D11-003-E	
	Operating Instructions	ARB-011-0	
	Connection Cord (white)	D51-003-B	
	Connection Cord (red)	D51-004-B	
	Pin Plug	K72-015-A	
	Speaker Plug	K71-032-0	
	Packing Case	AHD-062-0	
	Protector for Packing	H11-070-B	

POTENTIOMETERS

Symbol	Description	Part No.	
VR1	500k dual, BALANCE	C85-048-B	
VR2	500k dual, VOLUME	C85-054-0	

www.hifiengine.com

HEAD AMP UNIT (W21-007)

CAPACITORS

Symbol	Description			Part No.	
C1	Electrolytic	1	25V	CSSA 010X 25	
C2	Electrolytic	1	25V	CSSA 010X 25	
C3	Electrolytic	47	25V	CEA 470P 25	
C4	Electrolytic	47	25V	CEA 470P 25	
C5	Electrolytic	10	25V	CEA 100P 25	
C6	Electrolytic	10	25V	CEA 100P 25	
C7	Ceramic	100p	50V	CCDSL 101K 50	
C8	Ceramic	100p	50V	CCDSL 101K 50	
C9	Ceramic	270p	50V	CCDSL 271K 50	
C10	Ceramic	270p	50V	CCDSL 271K 50	
C11	Mylar	0.015	50V	CQMA 153J 50	
C12	Mylar	0.015	50V	CQMA 153J 50	
C13	Mylar	0.0039	50V	CQMA 392K 50	
C14	Mylar	0.0039	50V	CQMA 392K 50	
C15	Electrolytic	100	35V	CEA 101P 35	

RESISTORS

Symbol	Description		Part No.	
R1	Carbon film	3.3k	RD¼PS 332K	
R2	Carbon film	3.3k	RD¼PS 332K	
R3	Carbon film	330k	RD¼PS 334K	
R4	Carbon film	330k	RD¼PS 334K	
R5	Carbon film	330k	RD¼PS 334K	
R6	Carbon film	330k	RD¼PS 334K	
R7	Carbon film	330	RD¼PS 331J	
R8	Carbon film	330	RD¼PS 331J	
R9	Carbon film	470k	RD¼PS 474K	
R10	Carbon film	470k	RD¼PS 474K	
R11	Carbon film	56k	RD¼PS 563K	
R12	Carbon film	56k	RD¼PS 563K	
R13	Carbon film	390k	RD¼PS 394K	
R14	Carbon film	390k	RD¼PS 394K	
R15	Carbon film	3.3k	RD¼PS 332K	
R16	Carbon film	3.3k	RD¼PS 332K	
R17	Carbon film	4.7k	RD¼PS 472K	
R18	Carbon film	4.7k	RD¼PS 472K	
R19	Carbon film	3.3k	RD¼PS 332K	
R20	Carbon film	3.3k	RD¼PS 332K	
R21	Carbon film	47k	RD¼PS 473K	
R22	Carbon film	47k	RD¼PS 473K	
R23	Carbon film	200k	RD¼PS 204K	
R24	Carbon film	200k	RD¼PS 204K	
R25	Carbon film	18k	RD¼PS 183J	
R26	Carbon film	18k	RD¼PS 183J	
R27	Carbon film	1k	RD¼PS 102K	
R28	Carbon film	1k	RD¼PS 102K	
R29	Carbon film	39k	RD¼PS 393K	
R30	Carbon film	39k	RD¼PS 393K	

SEMICONDUCTORS

Symbol	Description		Part No.	
Q1	Transistor	2SC1000-BL		
Q2	Transistor	2SC1000-BL		
Q3	Transistor	2SC1000-BL, GR		
Q4	Transistor	2SC1000-BL, GR		
Q5	Transistor	2SC1000-BL, GR		
Q6	Transistor	2SC1000-BL, GR		

www.hifiengine.com

CONTROL AMP UNIT (W15-050)

CAPACITORS

Symbol	Description			Part No.	
C1	Electrolytic	0.1	25V	CSYA 0R1M 25	
C2	Electrolytic	0.1	25V	CSYA 0R1M 25	
C3	Electrolytic	30	6V	CEA 300P 6	
C4	Electrolytic	30	6V	CEA 300P 6	
C5	Ceramic	39p	50V	CCDSL 390K 50	
C6	Ceramic	39p	50V	CCDSL 390K 50	
C7	Electrolytic	30	6V	CEA 300P 6	
C8	Electrolytic	30	6V	CEA 300P 6	
C9	Ceramic	470p	50V	CCDSL 471K 50	
C10	Ceramic	470p	50V	CCDSL 471K 50	
C11	Electrolytic	10	25V	CEA 100P 25	
C12	Electrolytic	10	25V	CEA 100P 25	
C13	Electrolytic	10	25V	CEA 100P 25	
C14	Electrolytic	10	25V	CEA 100P 25	
C15	Electrolytic	50	25V	CEA 500P 25	

RESISTORS

Symbol	Description		Part No.	
R1	Carbon film	1k	RD¼PS 102K	
R2	Carbon film	1k	RD¼PS 102K	
R3	Carbon film	4.7M	RD¼PS 475K	
R4	Carbon film	4.7M	RD¼PS 475K	
R5	Carbon film	4.7k	RD¼PS 472K	
R6	Carbon film	4.7k	RD¼PS 472K	
R7	Carbon film	1k	RD¼PS 102K	
R8	Carbon film	1k	RD¼PS 102K	
R9	Carbon film	39k	RD¼PS 393K	
R10	Carbon film	39k	RD¼PS 393K	
R11	Carbon film	8.2k	RD¼PS 822K	
R12	Carbon film	8.2k	RD¼PS 822K	
R13	Carbon film	1.2k	RD¼PS 122K	
R14	Carbon film	1.2k	RD¼PS 122K	
R15	Carbon film	10k	RD¼PS 103K	
R16	Carbon film	10k	RD¼PS 103K	
R17	Carbon film	6.8k	RD¼PS 682K	
R18	Carbon film	6.8k	RD¼PS 682K	
R19	Carbon film	120k	RD¼PS 124K	
R20	Carbon film	120k	RD¼PS 124K	
R21	Carbon film	330	RD¼PS 331K	
R22	Carbon film	330	RD¼PS 331K	

SEMICONDUCTORS

Symbol	Description		Part No.	
Q1	FET	2SK30-Y		
Q2	FET	2SK30-Y		
Q3	Transistor	2SC458LG		
Q4	Transistor	2SC458LG		
Q5	Transistor	2SC458LG		
Q6	Transistor	2SC458LG		

www.hifiengine.com

FILTER UNIT (W28-006)

CAPACITORS

Symbol	Description			Part No.	
C1	Mylar	0.039	50V	CQMA 393K 50	
C2	Mylar	0.039	50V	CQMA 393K 50	
C3	Mylar	0.039	50V	CQMA 393K 50	
C4	Mylar	0.039	50V	CQMA 393K 50	
C5	Electrolytic	1	25V	CEA 010P 25	
C6	Electrolytic	1	25V	CEA 010P 25	
C7	Mylar	0.0082	50V	CQMA 822K 50	
C8	Mylar	0.0082	50V	CQMA 822K 50	
C9	Mylar	0.0039	50V	CQMA 392K 50	
C10	Mylar	0.0039	50V	CQMA 392K 50	
C11	Electrolytic	10	16V	CEA 100P 16	
C12	Electrolytic	10	16V	CEA 100P 16	
C13	Ceramic	82p	50V	CCDSL 820K 50	
C14	Ceramic	82p	50V	CCDSL 820K 50	
C15	Mylar	0.01	50V	CQMA 103K 50	
C16	Mylar	0.01	50V	CQMA 103K 50	
C17	Electrolytic	220	25V	CEA 221P 25	

RESISTORS

Symbol	Description		Part No.	
R1	Carbon film	39k	RD¼PS 393K	
R2	Carbon film	39k	RD¼PS 393K	
R3	Carbon film	4.7k	RD¼PS 472K	
R4	Carbon film	4.7k	RD¼PS 472K	
R5	Carbon film	220k	RD¼PS 224K	
R6	Carbon film	220k	RD¼PS 224K	
R7	Carbon film	180k	RD¼PS 184K	
R8	Carbon film	180k	RD¼PS 184K	
R9	Carbon film	4.7k	RD¼PS 472K	
R10	Carbon film	4.7k	RD¼PS 472K	
R11	Carbon film	2.2k	RD¼PS 222K	
R12	Carbon film	2.2k	RD¼PS 222K	
R13	Carbon film	3.9k	RD¼PS 392K	
R14	Carbon film	3.9k	RD¼PS 392K	
R15	Carbon film	68k	RD¼PS 683K	
R16	Carbon film	68k	RD¼PS 683K	
R17	Carbon film	27k	RD¼PS 273K	
R18	Carbon film	27k	RD¼PS 273K	
R19	Carbon film	1k	RD¼PS 102K	

SEMICONDUCTORS

Symbol	Description		Part No.	
Q1	Transistor	2SC870-E or F		
Q2	Transistor	2SC870-E or F		

www.hifiengine.com

MAIN AMP UNIT (W23-009)

CAPACITORS

Symbol	Description			Part No.	
C1	Electrolytic	1	25V	CSSA 010X 25	
C2	Electrolytic	1	25V	CSSA 010X 25	
C3	Ceramic	100p	50V	CCDSL 101K 50	
C4	Ceramic	100p	50V	CCDSL 101K 50	
C5	Ceramic	220p	50V	CCDSL 221K 50	
C6	Ceramic	220p	50V	CCDSL 221K 50	
C7	Mylar	0.033	50V	CQMA 333M 50	
C8	Mylar	0.033	50V	CQMA 333M 50	
C9	Electrolytic	220	10V	CEA 221P 10	
C10	Electrolytic	220	10V	CEA 221P 10	
C11	Electrolytic	22	6V	CEA 220P 6	
C12	Electrolytic	22	6V	CEA 220P 6	
C13	Electrolytic	100	50V	CEA 101P 50	
C14	Electrolytic	100	50V	CEA 101P 50	
C15	Ceramic	15p	50V	CCDSL 150K 50	
C16	Ceramic	15p	50V	CCDSL 150K 50	
C17	Ceramic	390p	50V	CKDYB 391K 50	
C18	Ceramic	390p	50V	CKDYB 391K 50	

RESISTORS

Symbol	Description		Part No.	
R1	Carbon film	1M	RD¼PS 105K	
R2	Carbon film	1M	RD¼PS 105K	
R3	Carbon film	2.2k	RD¼PS 222K	
R4	Carbon film	2.2k	RD¼PS 222K	
R5	Carbon film	22k	RD¼PS 223K	
R6	Carbon film	22k	RD¼PS 223K	
R7	Carbon film	1.2k	RD¼PS 122K	
R8	Carbon film	6.8k	RD¼PS 682K	
R9	Carbon film	6.8k	RD¼PS 682K	
R10	Carbon film	4.7k	RD¼PS 472K	
R11	Carbon film	4.7k	RD¼PS 472K	
R12	Carbon film	10k	RD¼PS 103K	
R13	Carbon film	10k	RD¼PS 103K	
R14	Carbon film	100k	RD¼PS 104K	
R15	Carbon film	100k	RD¼PS 104K	
R16	Carbon film	18k	RD¼PS 183K	
R17	Carbon film	18k	RD¼PS 183K	
R18	Carbon film	1k	RD¼PS 102K	
R19	Carbon film	1k	RD¼PS 102K	
R20	Carbon film	10 ½W	RD½PS 100K	
R21	Carbon film	10 ½W	RD½PS 100K	
R22	Carbon film	4.7k	RD¼PS 472K	
R23	Carbon film	4.7k	RD¼PS 472K	
R24	Carbon film	33k	RD¼PS 333K	
R25	Carbon film	33k	RD¼PS 333K	
R26	Carbon film	1.8k	RD¼PS 182K	
R27	Carbon film	1.8k	RD¼PS 182K	
R28	Carbon film	1k	RD¼PS 102K	
R29	Carbon film	1k	RD¼PS 102K	
R30	Carbon film	4.7k	RD¼PS 472K	
R31	Carbon film	4.7k	RD¼PS 472K	
R32	Carbon film	47	RD¼PS 470K	
R33	Carbon film	47	RD¼PS 470K	
R34	Carbon film	150 ½W	RD½PS 151K	
R35	Carbon film	150 ½W	RD½PS 151K	
R36	Carbon film	150 ½W	RD½PS 151K	
R37	Carbon film	150 ½W	RD½PS 151K	

www.hifiengine.com

POTENTIOMETERS

Symbol	Description		Part No.	
VR1	Semi-fixed	4.7k-B	C92-051-0	
VR2	Semi-fixed	4.7k-B	C92-051-0	
VR3	Semi-fixed	100-B	C92-063-0	
VR4	Semi-fixed	100-B	C92-063-0	

SEMICONDUCTORS

Symbol	Description		Part No.	
Q1	Transistor	2SA572-4B		
Q2	Transistor	2SA572-4B		
Q3	Transistor	2SA572-4B		
Q4	Transistor	2SA572-4B		
Q5	Transistor	2SC627-1		
Q6	Transistor	2SC627-1		
Q7	Transistor	2SC497-0		
Q8	Transistor	2SC497-0		
Q9	Transistor	2SA497-0		
Q10	Transistor	2SA497-0		
Q11	Transistor	2SC793-Y		
Q12	Transistor	2SC793-Y		
Q13	Transistor	2SC793-Y		
Q14	Transistor	2SC793-Y		
D1	Zener Diode	1S338Q		
D2	Zener Diode	1S338Q		
D3	Diode	1S1212		
D4	Varistor	STV-3-0		
D5	Varistor	STV-3-0		

PROTECTOR UNIT (W28-007)

CAPACITORS

Symbol	Description			Part No.	
C1	Mylar	0.056	50V	CQMA 563K 50	
C2	Mylar	0.056	50V	CQMA 563K 50	
C3	Electrolytic	220	10V	CEA 221P 10	
C4	Electrolytic	220	10V	CEA 221P 10	
C5	Electrolytic	100	16V	CEA 101P 16	

RESISTORS

Symbol	Description		Part No.	
R1	Carbon film	3.3k	RD¼PS 332K	
R2	Carbon film	3.3k	RD¼PS 332K	
R3	Carbon film	3.3k	RD¼PS 332K	
R4	Carbon film	3.3k	RD¼PS 332K	
R5	Carbon film	15k	RD¼PS 153K	
R6	Carbon film	15k	RD¼PS 153K	
R7	Carbon film	15k	RD¼PS 153K	
R8	Carbon film	15k	RD¼PS 153K	
R9	Carbon film	47k	RD¼PS 473K	
R10	Carbon film	47k	RD¼PS 473K	
R11	Carbon film	1.5k	RD¼PS 152K	
R12	Carbon film	1.5k	RD¼PS 152K	
R13	Carbon film	4.7k	RD¼PS 472J	
R14	Carbon film	1.5k	RD¼PS 152J	
R15	Carbon film	1.5k	RD¼PS 152J	

www.hifiengine.com

Symbol	Description			Part No.	
R16	Carbon film	680		RD¼PS 681J	
R17	Carbon film	1.5k		RD¼PS 152J	
R18	Carbon film	5.6k		RD¼PS 562J	
R19	Wire wound	0.5	2W	RT2P 0R5K	
R20	Carbon film	56k		RD¼PS 563K	
R21	Carbon film	22		RD¼PS 220K	
R22	Carbon film	47k		RD¼PS 473K	
R23	Metal oxide	220	1W	RS1P 221K	
R24	Metal oxide	10	2W	RS2P 100K	
R25	Metal oxide	10	2W	RS2P 100K	

POTENTIOMETER

Symbol	Description		Part No.	
VR1	Semi-fixed	100-B	C92-063-0	

COILS

Symboi	Description	Part No.	
L1	AF Choke Coil	T63-009-0	
L2	AF Choke Coil	T63-009-0	

SEMICONDUCTORS

Symbol	Description		Part No.	
Q1	Transistor	2SC983-0		
Q2	Transistor	2SC983-0		
Q3	Transistor	2SC945-R		
Q4	Transistor	2SC945-R		
Q5	Transistor	2SA572-4		
Q6	Transistor	2SC968-2		
Q7	Transistor	2SC495P-Y		
D1	Diode	SIB01-F		
D2	Diode	SIB01-F		
D3	Diode	SIB01-F		
D4	Diode	SIB01-F		
D5	Diode	SIB01-F		
D6	Diode	SIB01-F		
D7	Diode	SIB01-F		
D8	Diode	VB-11A		
D9	Diode	VB-11A		

www.hifiengine.com

POWER SUPPLY UNIT (W16-033)

CAPACITORS

Symbol	Description			Part No.	
C1	Ceramic	0.01	DC 1.4kV	C43-003-0	
C2	Ceramic	0.01	DC 1.4kV	C43-003-0	
C3	Ceramic	0.01	DC 1.4kV	C43-003-0	
C4	Ceramic	0.01	DC 1.4kV	C43-003-0	
C5	Electrolytic	100	50V	CEA 101P 50	
C6	Ceramic	100p	50V	CCDSL 101K 50	
C7	Electrolytic	220	35V	CEA 221P 35	
C8	Electrolytic	330	25V	CEA 331P 25	

RESISTORS

Symbol	Description		Part No.	
R1	Carbon film	1.5k	RD¼PS 152K	
R2	Carbon film	1.5k	RD¼PS 152K	
R3	Carbon film	3.3k	RD¼PS 332K	
R4	Carbon film	18k	RD¼PS 183K	
R5	Carbon film	12k	RD¼PS 123K	
R6	Carbon film	820	RD¼PS 821K	

SEMICONDUCTORS

Symbol	Description		Part No.	
Q1	Transistor	2SD234-0		
Q2	Transistor	2SC373		
D1	Diode	SR3AM-8		
D2	Diode	SR3AM-8		
D3	Diode	SR3AM-8		
D4	Diode	SR3AM-8		
D5	Diode	1S1850		
D6	Zener Diode	1S338Q		

www.hifiengine.com

9 · PACKING METHOD AND PARTS

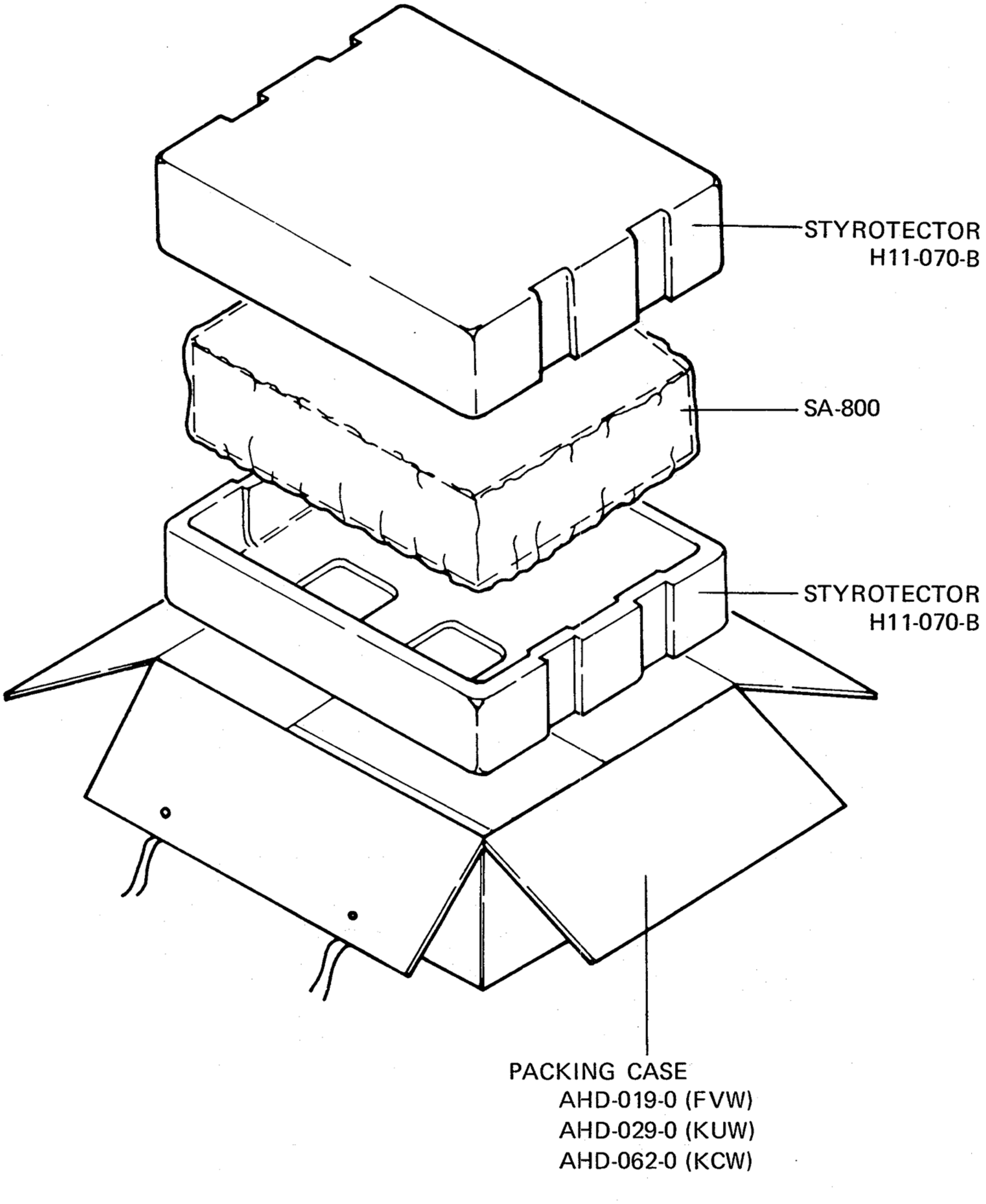

www.hifiengine.com

PIONEER ELECTRONIC CORPORATION
15-5, 4-Chome, Ohmori-nishi, Ohta-ku, Tokyo, Japan
U.S. PIONEER ELECTRONICS CORPORATION
178 Commerce Road, Carlstadt New Jersey 07072 U.S.A.
PIONEER ELECTRONIC (EUROPE) N.V.
Noorderlaan 83, 2030 Antwerp, Belgium

1971 PRINTED IN JAPAN

www.hifiengine.com