Generated by Foxit PDF Creator @ Foxit Software
http://www.foxitsoftware.com For evaluation only.

ADDITIONAL

Service Manual

PIONEER

STEREO AMPLIFIER

SA-710 HE HB

MODEL SA-710 COMES IN FIVE VERSIONS DISTINGUISHED AS FOLLOWS:

Type	Voltage	Remarks
KU	120V only	U.S.A. model
HE	220V and 240V (switchable)	Europe model
HB	220V and 240V (switchable)	U.K. model
S	110V, 120V, 220V and 240V (switchable)	General export model
S/G	110V, 120V, 220V and 240V (switchable)	U.S. Military model

- This additional service manual is applicable to the HE and HB types.
- The basic performance of the SA-710/HE and HB types are the same as the SA-710/KU type. Please refer to the SA-710/KU service manual <ART-477> with exception of this supplement.

1. SPECIFICATIONS

The specifications for SA-710/HE and HB types are the same as the SA-710/KU type except for following section.

Amplifier Section

Hum and Noise (DIN, continuous Power/50mW)
PHONO 70dB/62dB
TUNER, AUX, TAPE PLAY 1, 2 .... 88dB/64dB

Miscellaneous

Power Requirements
HE type 220V, 240V 50/60Hz
HB type 220V, 240V 50/60Hz

Power Consumption
HE, HB types ..... 380 W

PIONEER ELECTRONIC CORPORATION 4-1, Meguro 1-Chome, Meguro-ku, Tokyo 153, Japan
U.S. PIONEER ELECTRONICS CORPORATION 85 Oxford Drive, Moonachie, New Jersey 07074, U.S.A.
PIONEER ELECTRONIC (EUROPE) N.V. Luithagen-Haven 9, 2030 Antwerp, Belgium
PIONEER ELECTRONICS AUSTRALIA PTY. LTD. 178-184 Boundary Road, Braeside, Victoria 3195, Australia
<ART-524-0>

Y © APR. 1980 Printed in Japan

Generated by Foxit PDF Creator @ Foxit Software
http://www.foxitsoftware.com For evaluation only.

2. CONTRAST OF MISCELLANEOUS PARTS

NOTES:
- *Parts without part number cannot be supplied.*
- *The ⚠ mark found on some component parts indicates the importance of the safety factor of the part. Therefore, when replacing, be sure to use parts of identical designation.*

ASSEMBLIES

Symbol	Description	Part No.			Remarks
		KU type	HE type	HB type	
	AF amplifier assembly	GWK-145	GWK-152	GWK-152	
	Tone control assembly	GWG-139	GWG-142	GWG-142	
	Switch assembly	GWS-218	GWS-234	GWS-234	SPEAKERS
	Switch assembly	GWS-219	GWS-235	GWS-235	FUNCTION
	Volume assembly	GWX-461	GWX-487	GWX-487	
	Headphones assembly	GWX-462	GWX-487	GWX-487	
	Fuse assembly	.....	GWX-488	GWX-488	
	F.L assembly	AWV-007	AWV-007	AWV-007	

OTHERS

Symbol	Description	Part No.			Remarks
		KU type	HE type	HB type	
	Front panel assembly	ANB-846	ANB-894	ANB-894	
⚠T1	Power transformer	ATT-668	ATT-703	ATT-703	
⚠FU1	Fuse (5A)	AEK-108	.....	.....	
⚠FU1	Fuse (T2A)	.....	AEK-017	AEK-017	
⚠FU2	Fuse (T2.5A)	.....	AEK-403	.....	
⚠S8	Lever switch	ASK-520	ASK-521	ASK-521	
⚠C1	Capacitor	ACG-001	.....	.....	
⚠	AC socket	AKP-032	AKP-026	AKP-044	
⚠	AC power code	ADG-023	ADG-041	ADG-051	

PACKING AND FURNISHED PARTS

Symbol	Description	Part No.			Remarks
		KU type	HE type	HB type	
	Operating instructions (English)	ARB-353	ARB-364	ARB-364	
	Operating instructions (German/French)	.....	ARD-146	.....	
	Packing case	AHD-753	AHD-774	AHD-774	

Generated by Foxit PDF Creator @ Foxit Software
http://www.foxitsoftware.com For evaluation only.

3. SCHEMATIC DIAGRAM

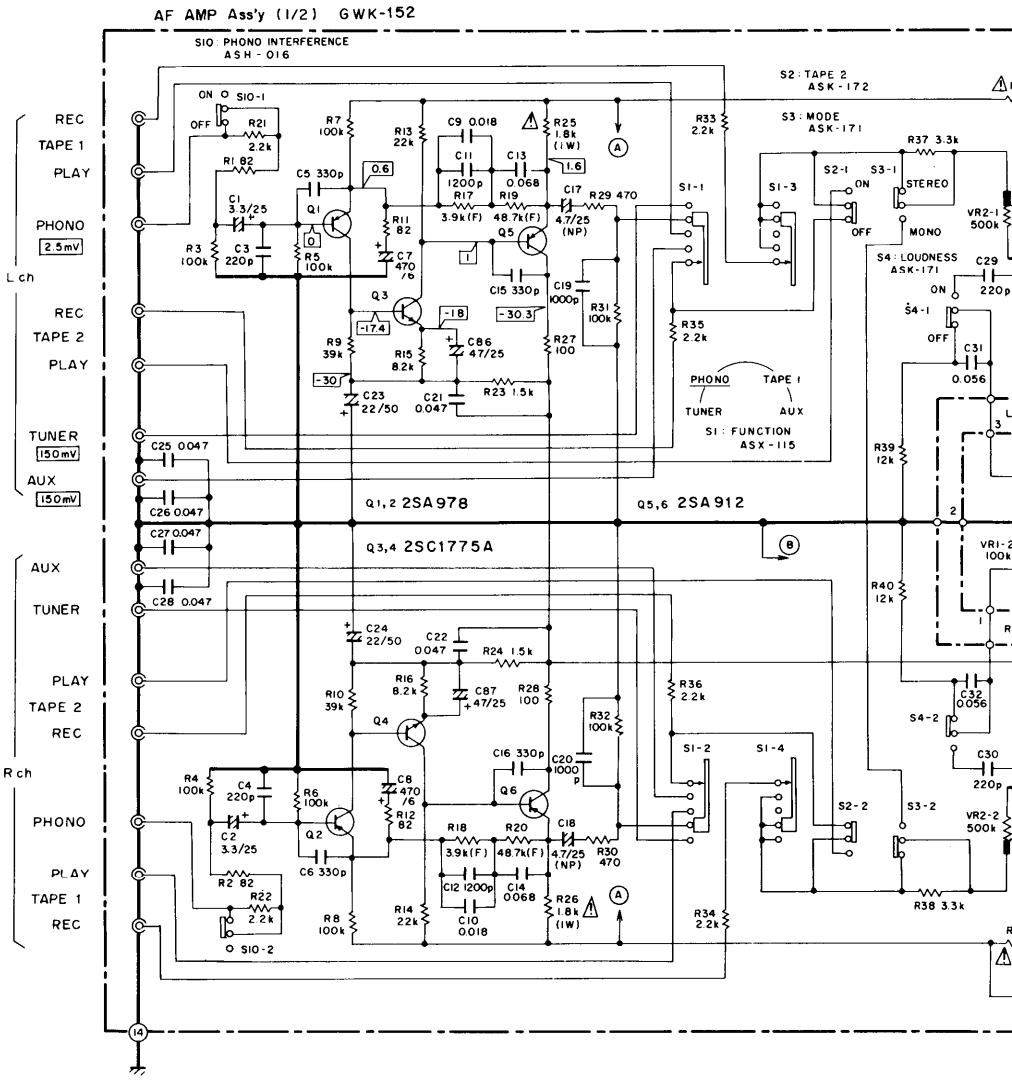

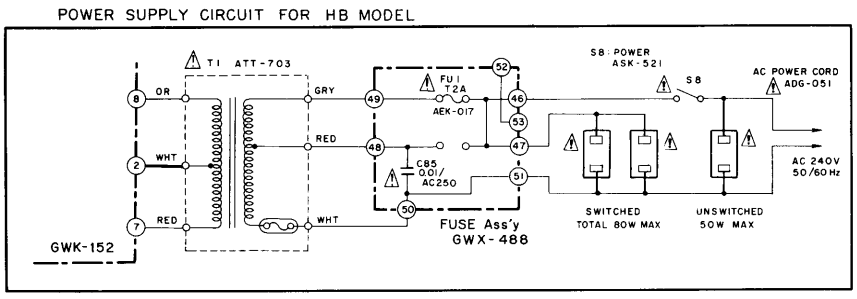

1. RESISTORS:
Indicated in Ω, ¼W, ±5% tolerance unless otherwise noted k : kΩ, M : MΩ, (F) : ±1%, (G) : ±2%, (K) : ±10% tolerance

2. CAPACITORS:
Indicated in capacity (μF)/voltage (V) unless otherwise noted p : pF
Indication without voltage is 50V except electrolytic capacitor.

3. VOLTAGE, CURRENT:
: Signal voltage at 65 W + 65 W 8Ω output (1kHz)
: DC voltage (V) at no input signal
Value in ( ) is DC voltage at rated power.
⇦ mA : DC current at no input signal

4. OTHERS:
➡ : Signal route.
⊘ : Adjusting point.
The ⚠ mark found on some component parts indicates the importance of the safety factor of the part. Therefore, when replacing, be sure to use parts of identical designation.

This is the basic schematic diagram, but the actual circuit may vary due to improvements in design.

Generated by Foxit PDF Creator @ Foxit Software
http://www.foxitsoftware.com For evaluation only.

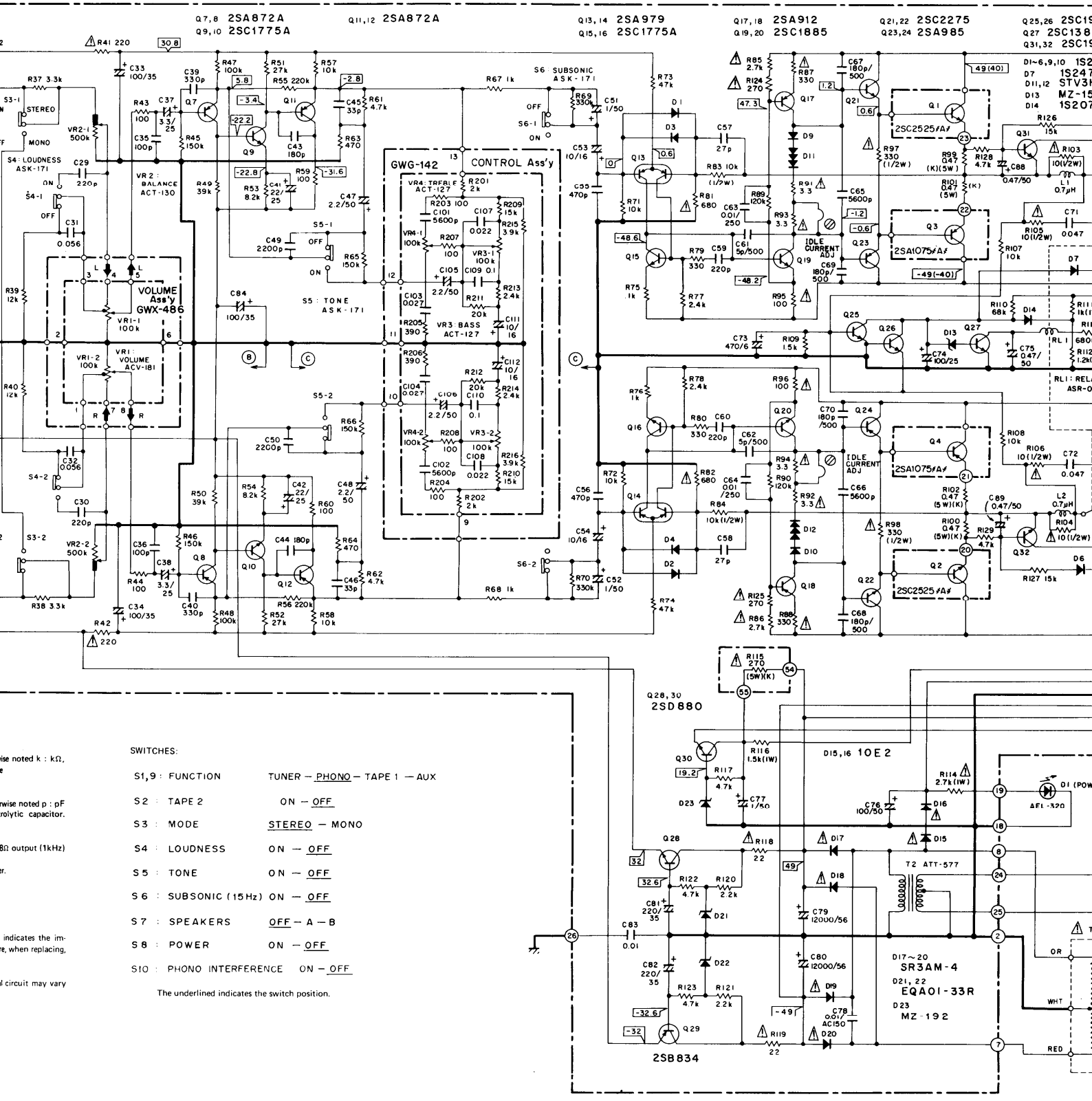

SWITCHES:

S1,9 : FUNCTION	TUNER — PHONO — TAPE 1 — AUX
S2 : TAPE 2	ON — OFF
S3 : MODE	STEREO — MONO
S4 : LOUDNESS	ON — OFF
S5 : TONE	ON — OFF
S6 : SUBSONIC (15Hz)	ON — OFF
S7 : SPEAKERS	OFF — A — B
S8 : POWER	ON — OFF
S10 : PHONO INTERFERENCE	ON — OFF

The underlined indicates the switch position.

Generated by Foxit PDF Creator @ Foxit Software
http://www.foxitsoftware.com For evaluation only.

NOTE:
The indicated semiconductors are representative ones only. Other alternative semiconductors may be used and are listed in the parts list.

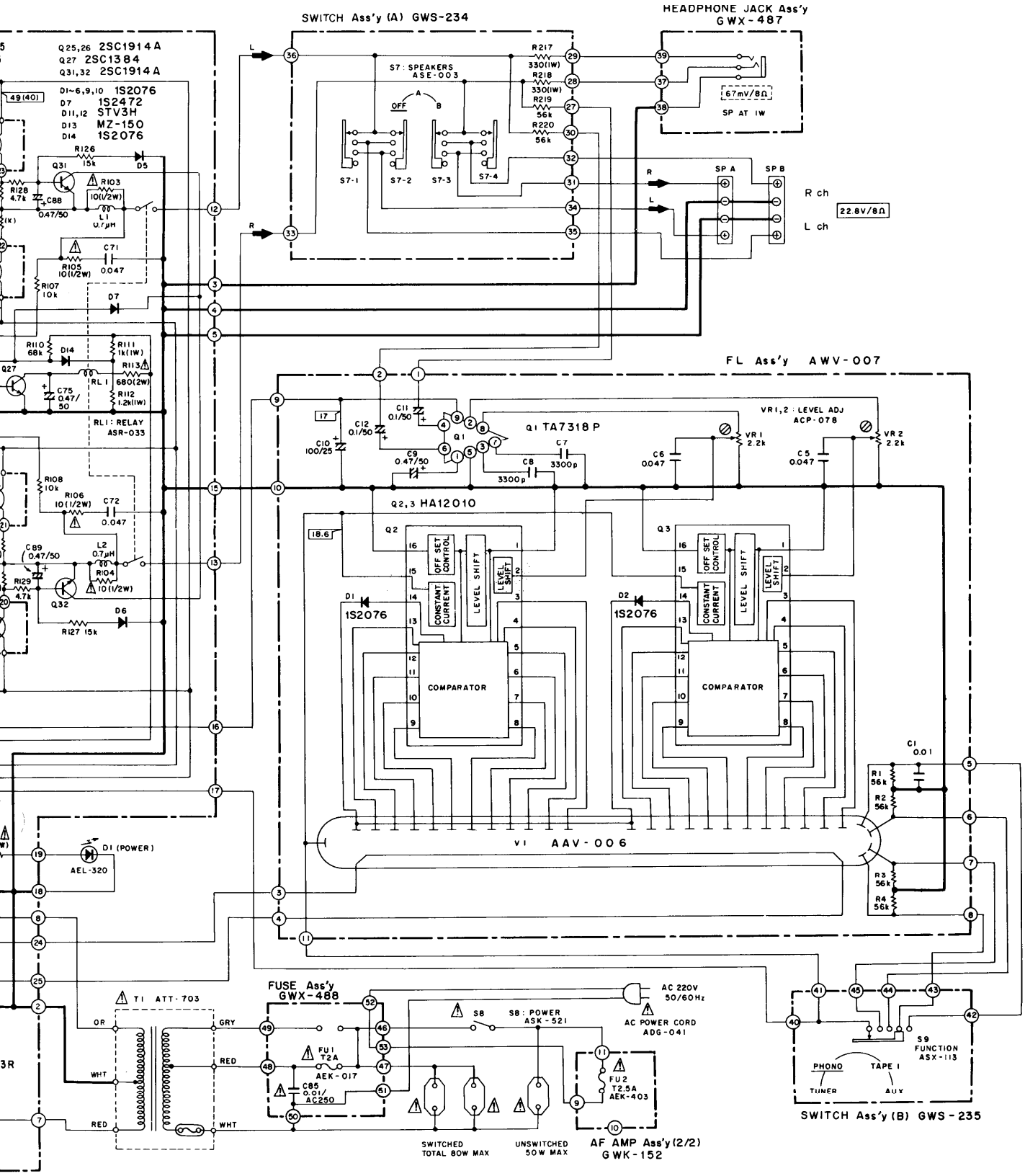

Generated by Foxit PDF Creator @ Foxit Software
http://www.foxitsoftware.com For evaluation only.

4. P.C. BOARD PATTERNS

AF Amplifier Assembly (GWK-152)

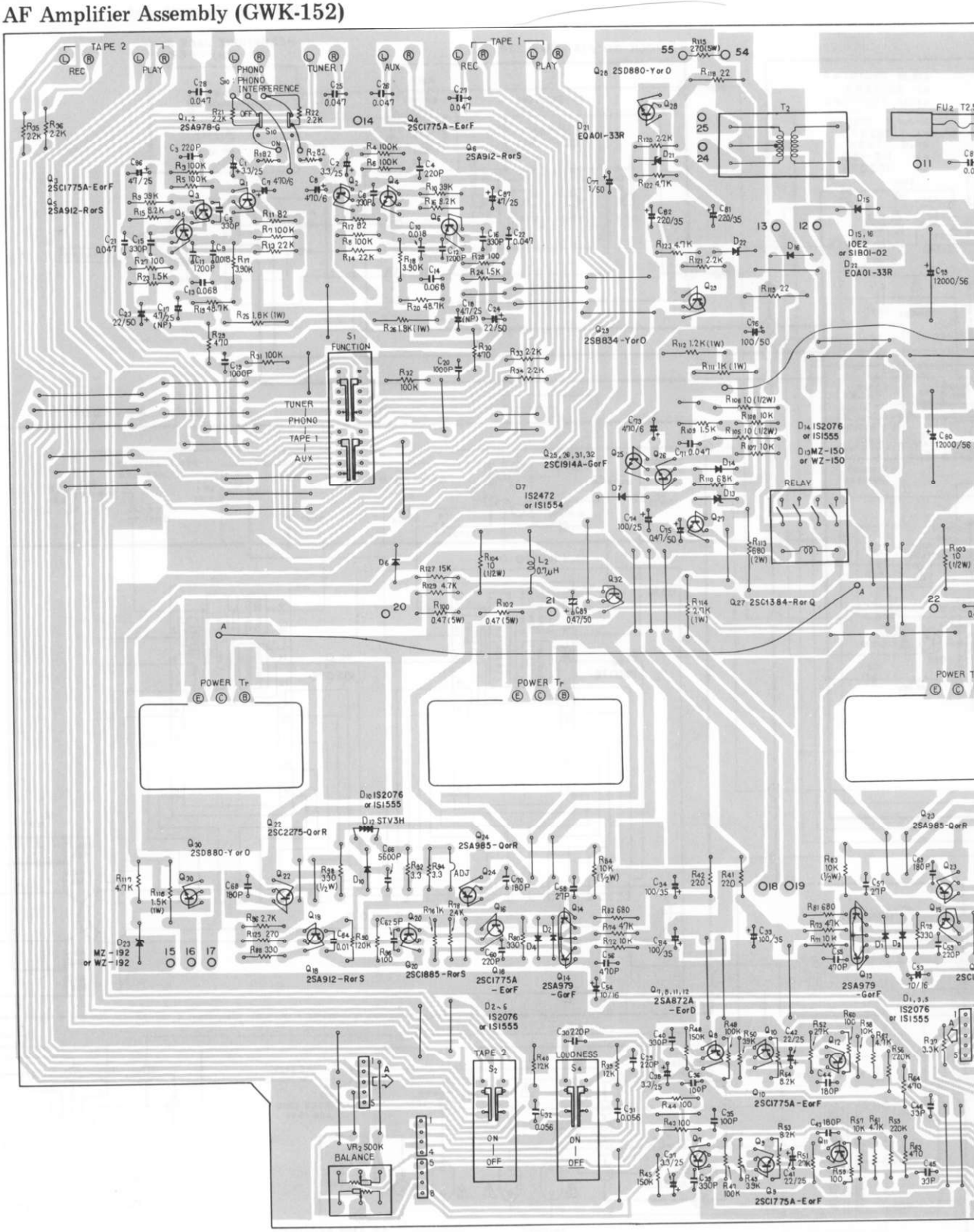

Generated by Foxit PDF Creator @ Foxit Software
http://www.foxitsoftware.com For evaluation only.

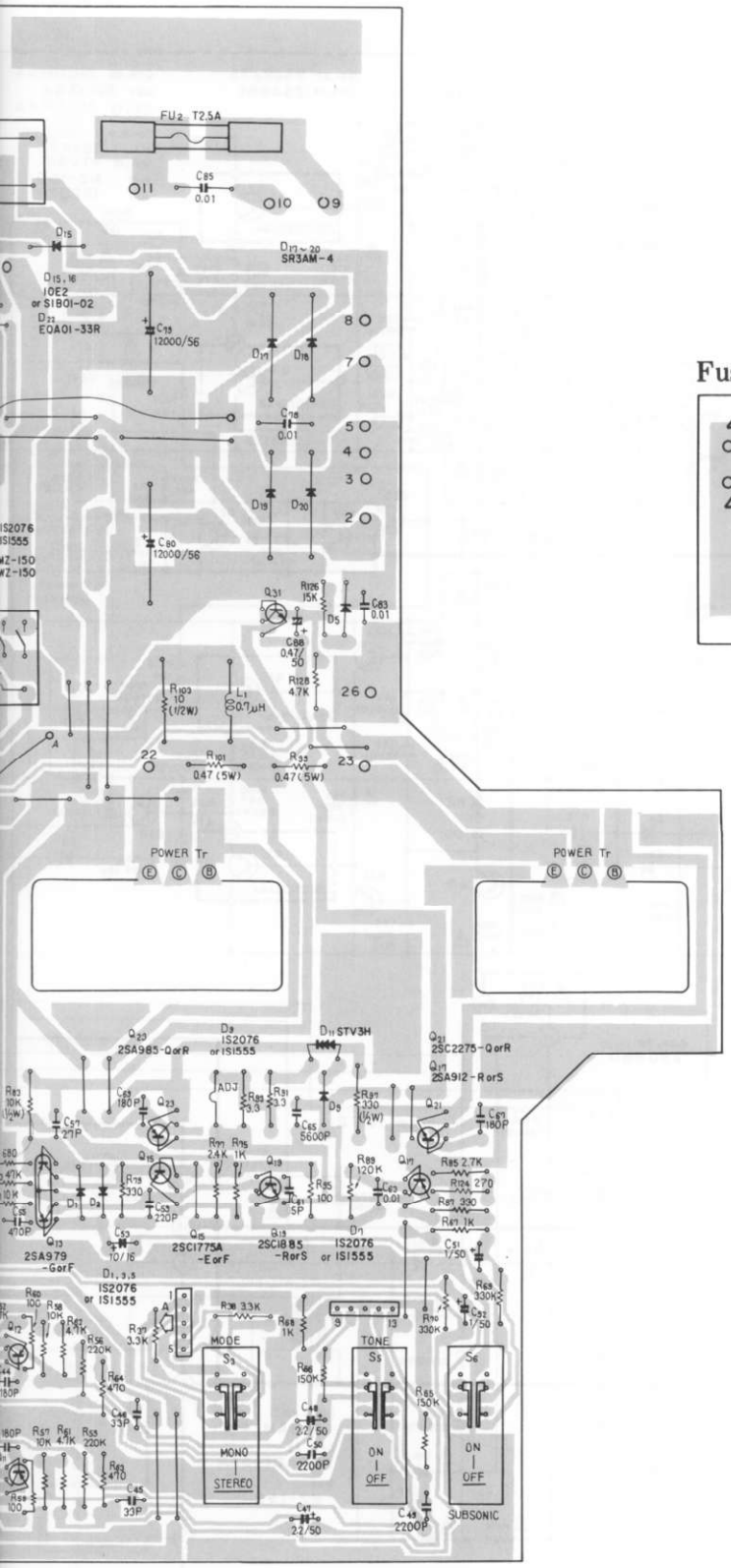

Fuse Assembly (GWX-488)

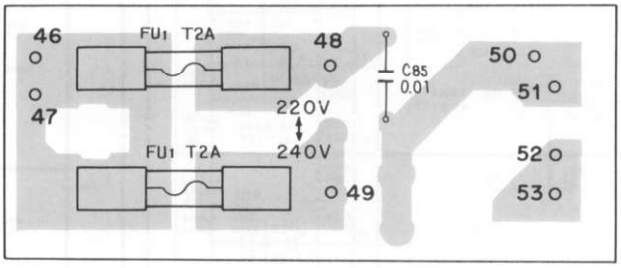

Generated by Foxit PDF Creator @ Foxit Software
http://www.foxitsoftware.com For evaluation only.

5. PARTS LIST OF P.C. BOARD ASSEMBLIES

AF Amplifier Assembly (GWK-152)

SWITCHES, RELAY AND TRANSFORMER

Part No.	Symbol & Description	
ASX-115	S1	Remote slide switch
ASK-172	S2	Lever switch
ASK-171	S3–S6	Lever switch
ASH-016	S10	Slide switch
ASR-033	RL1	Relay
ATT-577	T2	Heater transformer

CAPACITORS

Part No.	Symbol & Description	
CEANL 3R3M 25	C1, C2, C37, C38	
ACH-212	C79, C80	Electrolytic capacitor
ACH-318	C17, C18	Electrolytic capacitor
ACG-004	C78	Capacitor
CEA 221M 35L	C81, C82	
CEA 101M 50L	C76	
CEA 101M 35L	C33, C34, C84	
CEA 101M 25L	C74	
CEA 471M 6L	C7, C8, C73	
CEA 220M 50L	C23, C24	
CEA 470M 25L	C86, C87	
CEA 220M 25L	C41, C42	
CEA 010M 50L	C77	
CEA R47M 50L	C75, C88, C89	
CEANL 2R2M 50	C47, C48	
CEANL 010M 50	C51, C52	
CEANL 100M 16	C53, C54	
CQMA 473K 50	C71, C72	
CQMA 563K 50	C31, C32	
CQMA 102K 50	C19, C20	
CQMA 122J 50	C11, C12	
CQMA 103K 250	C63, C64	
CQPA 683G 50	C13, C14	
CQPA 183G 50	C9, C10	
CCDSL 050D 500	C61, C62	
CCDSL 181K 500	C67–C70	
CCDSL 330J 50	C45, C46	
CCDSL 270J 50	C57, C58	
CCDSL 101J 50	C35, C36	
CCDSL 181J 50	C43, C44	
CCDSL 221J 50	C3, C4, C29, C30, C59, C60	
CKDYB 331K 50	C5, C6, C15, C16, C39, C40	
CKDYB 471K 50	C55, C56	
CKDYB 222K 50	C49, C50	
CKDYB 562K 50	C65, C66	
CKDYF 473Z 50	C21, C22, C25–C28	
CKDYF 103Z 50	C83	

Note: When ordering resistors, convert the resistance value into code form, and then rewrite the part no. as before.

RESISTORS

Part No.	Symbol & Description	
ACT-130	VR2	Variable resistor
ACN-041	R99–R102	Cement coated
⚠ ACN-045	R115	Cement coated
⚠ RS2P □□□ J	R113	
⚠ RS1P □□□ J	R114, R25, R26	
RS1P □□□ J	R111, R112, R116	
RN¼PQ □□□□ J	R17–R20	
⚠ RD½PSF □□□ J	R97, R98, R103–R106	
RD½PS □□□ J	R83, R84	
⚠ RD¼PMF □□□ J	R41, R42, R81, R82, R85–R88, R91–R96, R118, R119, R124, R125	
RD¼PM □□□ J	R1–R16, R21–R24, R27–R40, R43–R80, R89, R90, R107–R110, R117, R120–R123, R126–R129	

SEMICONDUCTORS

Part No.	Symbol & Description
2SA978	Q1, Q2
2SC1775A	Q3, Q4, Q9, Q10, Q15, Q16
2SA912	Q5, Q6, Q17, Q18
2SA872A	Q7, Q8, Q11, Q12
2SA979-G	Q13, Q14
2SC1885	Q19, Q20
2SC2275-Q	Q21, Q22 } hfe should have the same rank
2SA985-Q	Q23, Q24 }
2SC1914A	Q25, Q26, Q31, Q32
2SC1384	Q27
2SD880 (2SD313P)	Q28, Q30
2SB834 (2SB507P)	Q29
⚠ SR3AM-4	D17–D20
⚠ 10E2 (SIB01-02)	D15, D16
1S2076 (1S1555)	D1–D6, D9, D10, D14
1S2472 (1S1555)	D7
MZ-192 (WZ-192)	D23
MZ-150 (WZ-150)	D13
EQA01-33R	D21, D22
STV3H	D11, D12

Generated by Foxit PDF Creator @ Foxit Software
http://www.foxitsoftware.com For evaluation only.

OTHERS

Part No.	Symbol & Description
AKB-064	Terminal (INPUT)
AKB-063	Terminal (TAPE)
ABA-139	Screw 3x6

Fuse Assembly (GWX-488)

Part No.	Symbol & Description	
ACG-001	C85	Capacitor

NOTE:
The only difference betwen followng assemblies in models SA-710/KU, HE and HB types lies in the assembly parts numbers. All circuit and parts are exactly the same. For P.C. board patterns and parts list, refer to the service manual for SA-710/KU type.

Description	Part No.	
	KU type	HE and HB types
Tone control assembly	GWG-139	GWG-142
Switch assembly	GWS-218	GWS-234
Switch assembly	GWS-219	GWS-235
Volume assembly	GWX-461	GWX-486
Headphones assembly	GWX-462	GWX-487

6. LINE VOLTAGE SELECTION

Line voltage can be changed with following steps.

1. Disconnect the AC power cord.
2. Remove the bonnet cover.
3. Take out the fuse from the fuse assembly.
4. Re-install the fuse in the correct voltage indication.
5. Stick the line voltage label on the rear panel.

Part No.	Description
AAX-193	220V label
AAX-192	240V label

