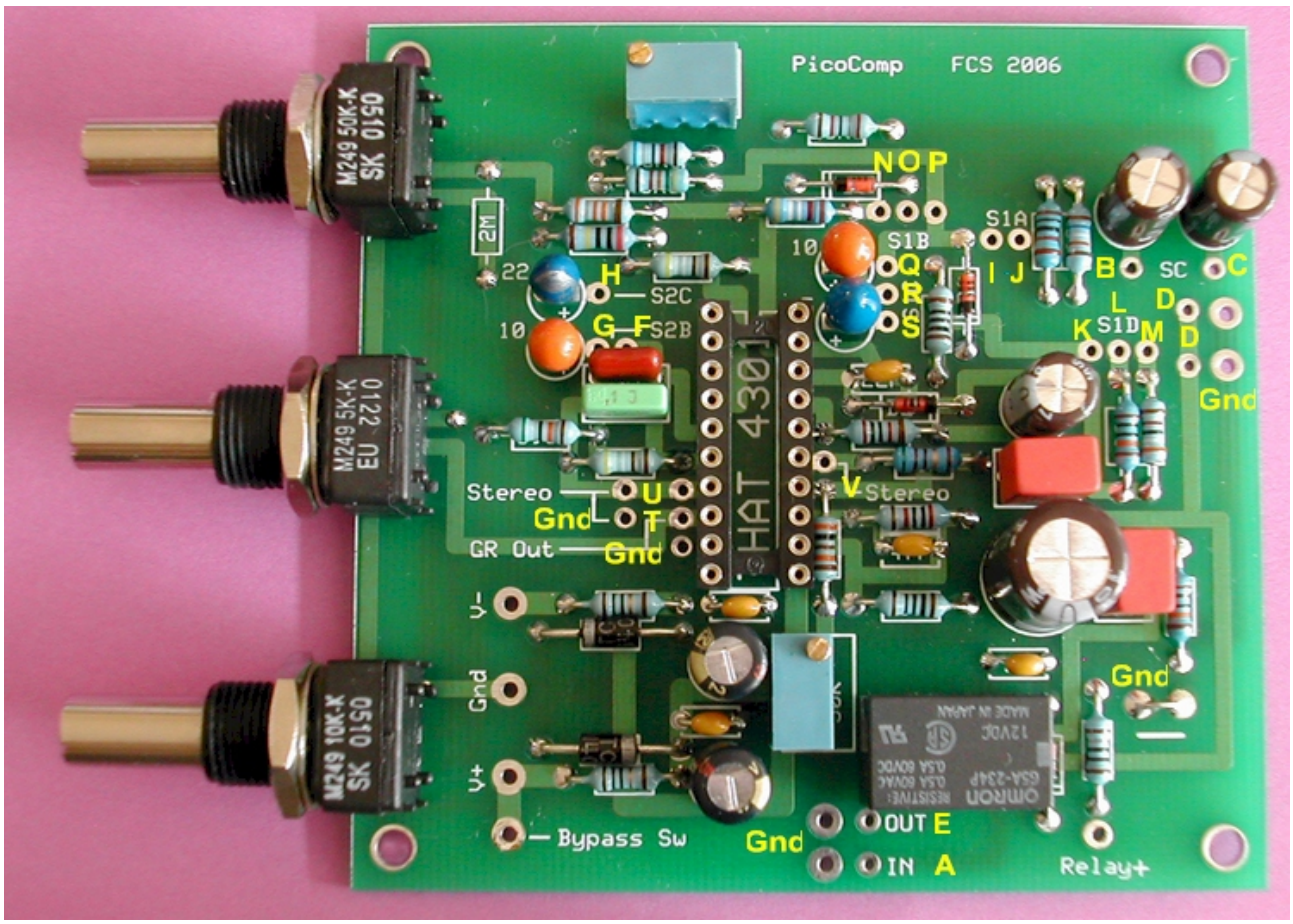
PicoComp FCS 2006
M249 50K-K SK 0510
M249 5K-K EU 0122
M249 10K-K SK 0510
HAT 4301
Stereo
GR Out
Gnd
V-
V+
Bypass Sw
OUT E
IN A
Relay+
Gnd
S1A
S1B
S1D
S2C
S2B
SC
2M

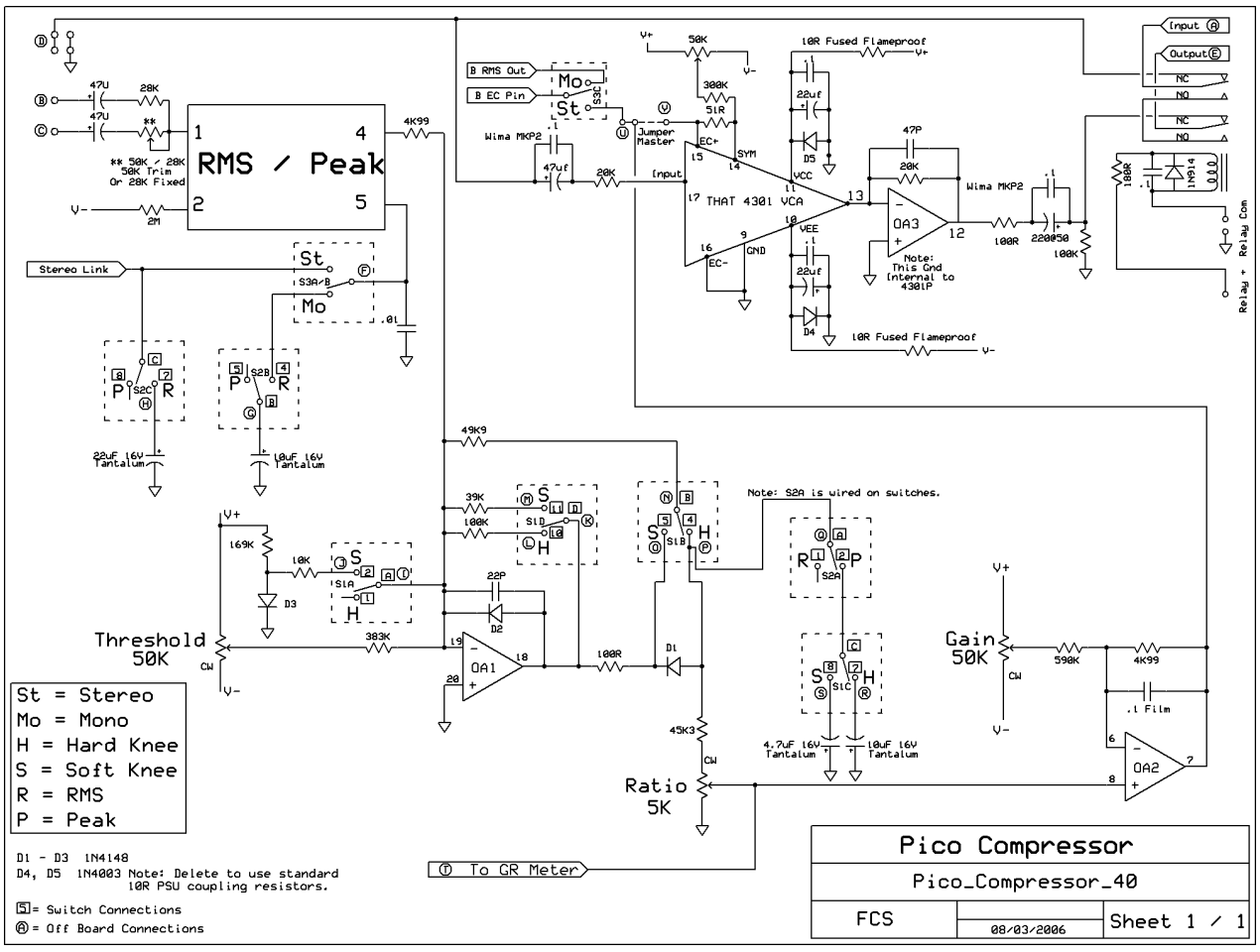
RMS / Peak
Stereo Link
Threshold 50K
Gain 50K
Ratio 5K
THAT 4301 VCA
OA1
OA2
OA3
Note: S2A is wired on switches.
Note: This Gnd Internal to 4301P
10R Fused Flameproof
Wima MKP2
Jumper Master
Input
Output
Relay Com
Relay +
To GR Meter
St = Stereo
Mo = Mono
H = Hard Knee
S = Soft Knee
R = RMS
P = Peak
D1 - D3 1N4148
D4, D5 1N4003 Note: Delete to use standard 10R PSU coupling resistors.
5 = Switch Connections
A = Off Board Connections
Pico Compressor
Pico_Compressor_40
FCS
08/03/2006
Sheet 1 / 1

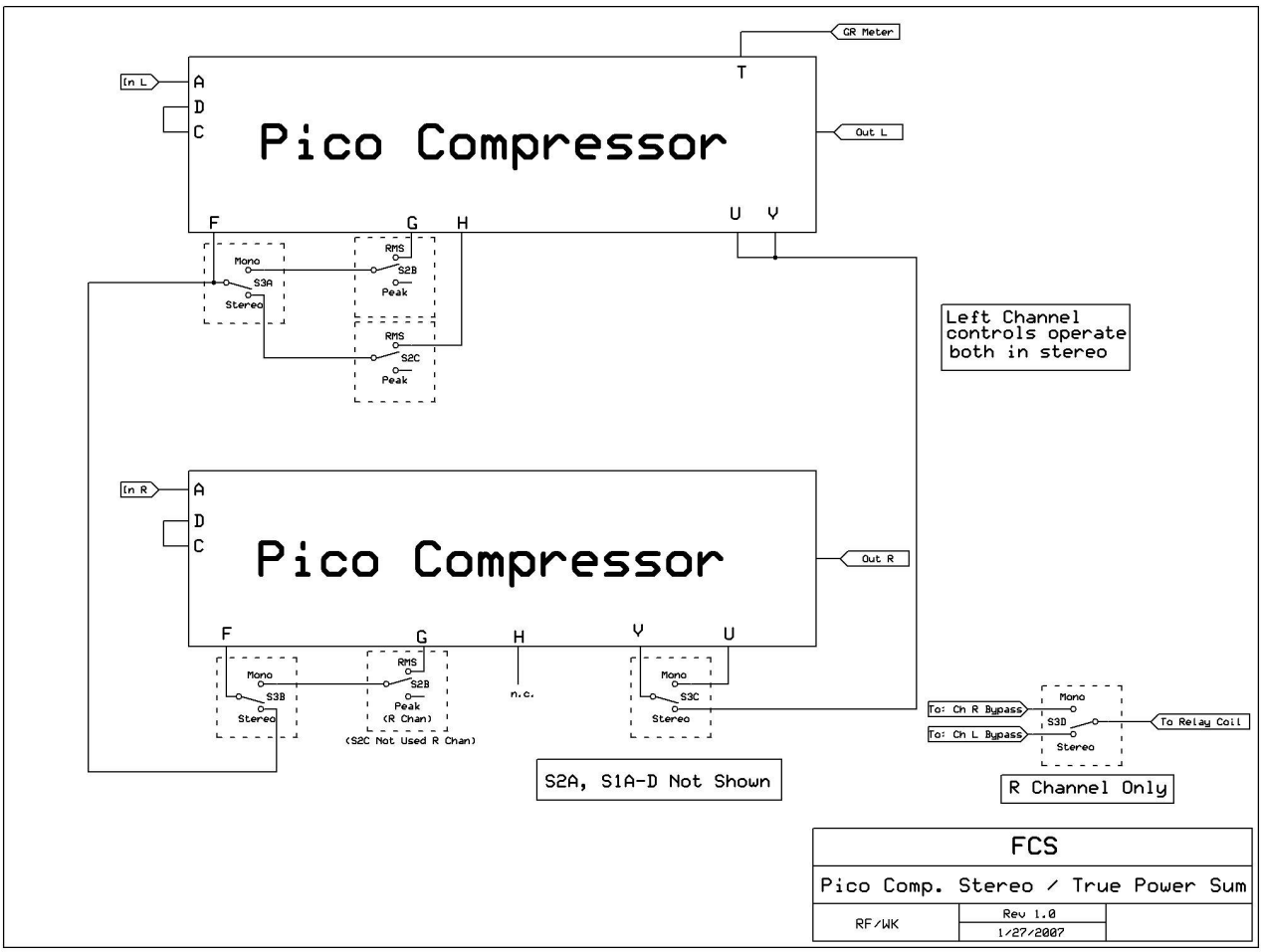
GR Meter
T
In L
A
D
C
Pico Compressor
Out L
F
G
H
U
V
Mono
S3A
Stereo
RMS
S2B
Peak
RMS
S2C
Peak
Left Channel controls operate both in stereo
In R
A
D
C
Pico Compressor
Out R
F
G
H
V
U
Mono
S3B
Stereo
RMS
S2B
Peak
(R Chan)
(S2C Not Used R Chan)
n.c.
Mono
S3C
Stereo
To: Ch R Bypass
To: Ch L Bypass
Mono
S3D
Stereo
To Relay Coil
S2A, S1A-D Not Shown
R Channel Only
FCS
Pico Comp. Stereo / True Power Sum
RF/WK
Rev 1.0
1/27/2007