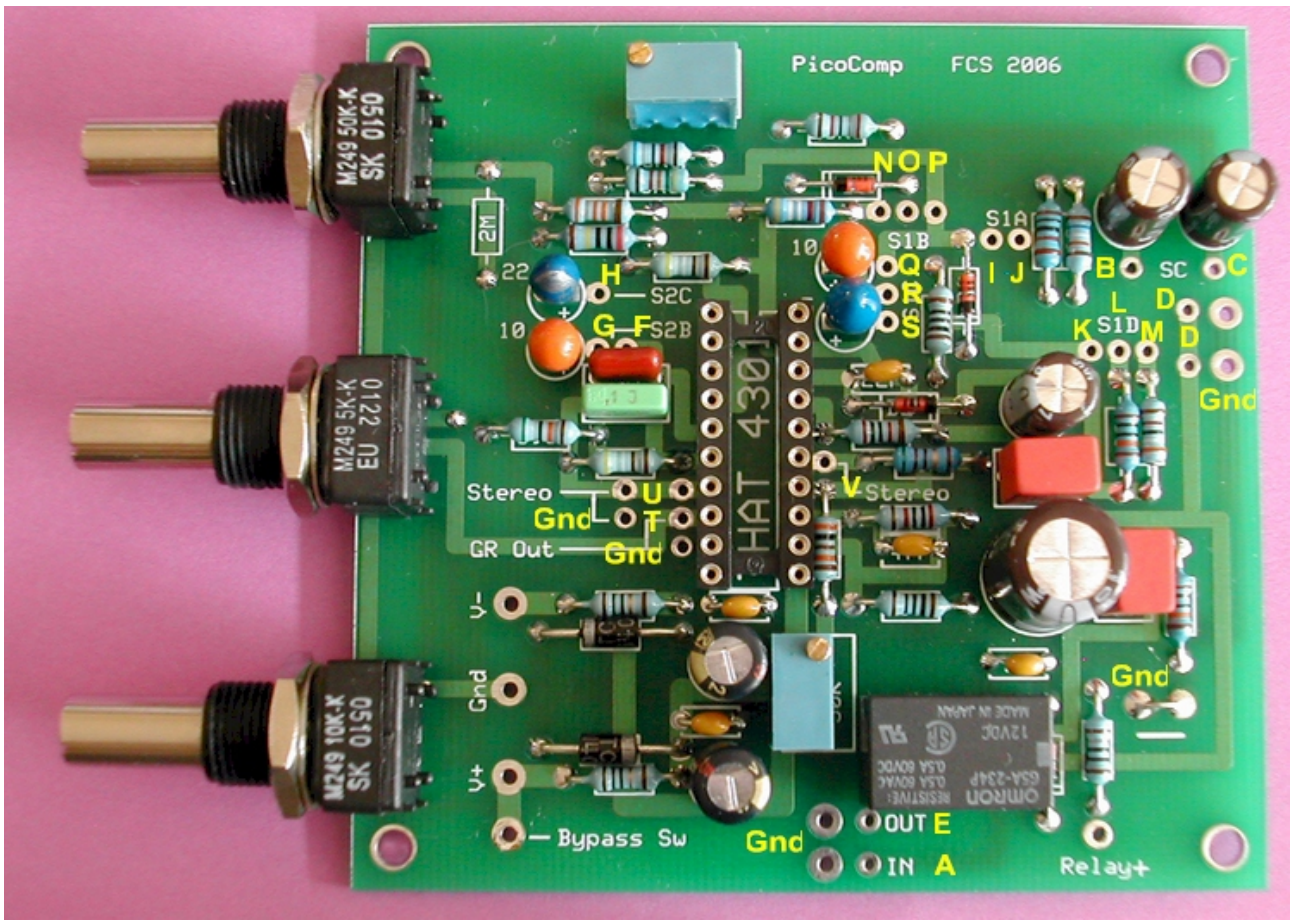
PicoComp FCS 2006
M249 50K-K SK 0150
M249 5K-K EU 0122
M249 10K-K SK 0150
HAT 4301
Stereo
GR Out
Gnd
V-
V+
Bypass Sw
OUT E
IN A
Relay+
S1A
S1B
S1D
S2B
S2C
SC
2M
OMRON
12VDC
MADE IN JAPAN

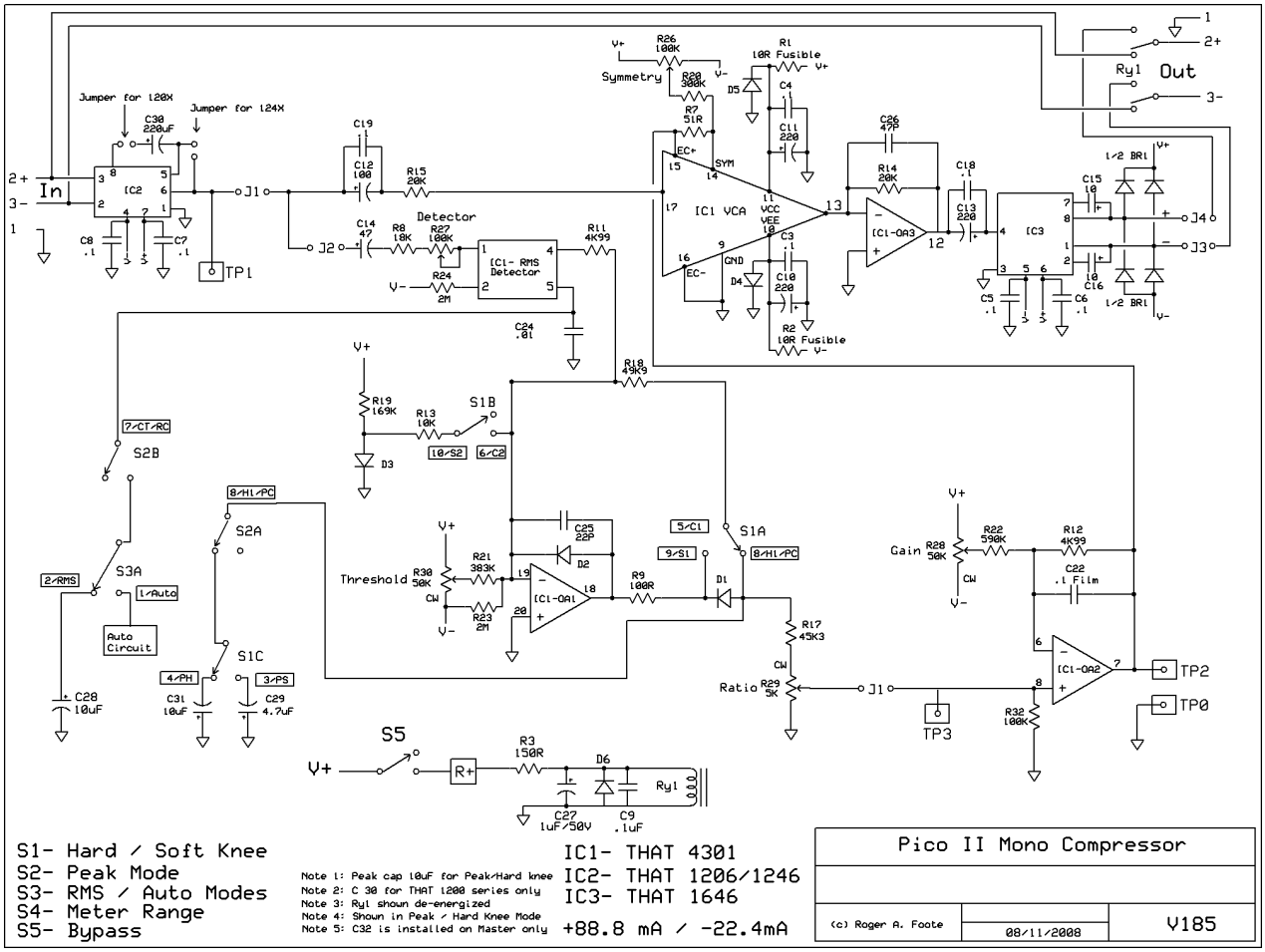
Jumper for 120X
Jumper for 124X
C30 220uF
In
IC2
J1
TP1
C19
C12 100
R15 20K
Detector
C14 47
R8 18K
R27 100K
IC1- RMS Detector
R24 2M
R11 4K99
C24 .01
Symmetry
R26 100K
R20 300K
R7 51R
R1 10R Fusible
D5
C4
C11 220
IC1 VCA
C26 47P
R14 20K
IC1-OA3
C18 .1
C13 220
IC3
C15 10
C16 10
1/2 BR1
J4
J3
Ry1
Out
R2 10R Fusible
D4
C10 220
C3 .1
R18 49K9
R19 169K
R13 10K
S1B
10/S2
6/C2
D3
7/CT/RC
S2B
8/H1/PC
S2A
S3A
2/RMS
1/Auto
Auto Circuit
S1C
4/PH
3/PS
C28 10uF
C31 10uF
C29 4.7uF
Threshold
R30 50K
R21 383K
R23 2M
C25 22P
D2
IC1-OA1
R9 100R
5/C1
9/S1
S1A
8/H1/PC
D1
R17 45K3
Ratio
R29 5K
Gain
R28 50K
R22 590K
R12 4K99
C22 .1 Film
IC1-OA2
TP2
TP0
TP3
R32 100K
S5
R3 150R
D6
C27 1uF/50V
C9 .1uF
S1- Hard / Soft Knee
S2- Peak Mode
S3- RMS / Auto Modes
S4- Meter Range
S5- Bypass
Note 1: Peak cap 10uF for Peak/Hard knee
Note 2: C 30 for THAT 1200 series only
Note 3: Ry1 shown de-energized
Note 4: Shown in Peak / Hard Knee Mode
Note 5: C32 is installed on Master only
IC1- THAT 4301
IC2- THAT 1206/1246
IC3- THAT 1646
+88.8 mA / -22.4mA
Pico II Mono Compressor
(c) Roger A. Foote
08/11/2008
V185