# 400 SERIES TWO POWER AMPLIFIER

# *Service Manual*

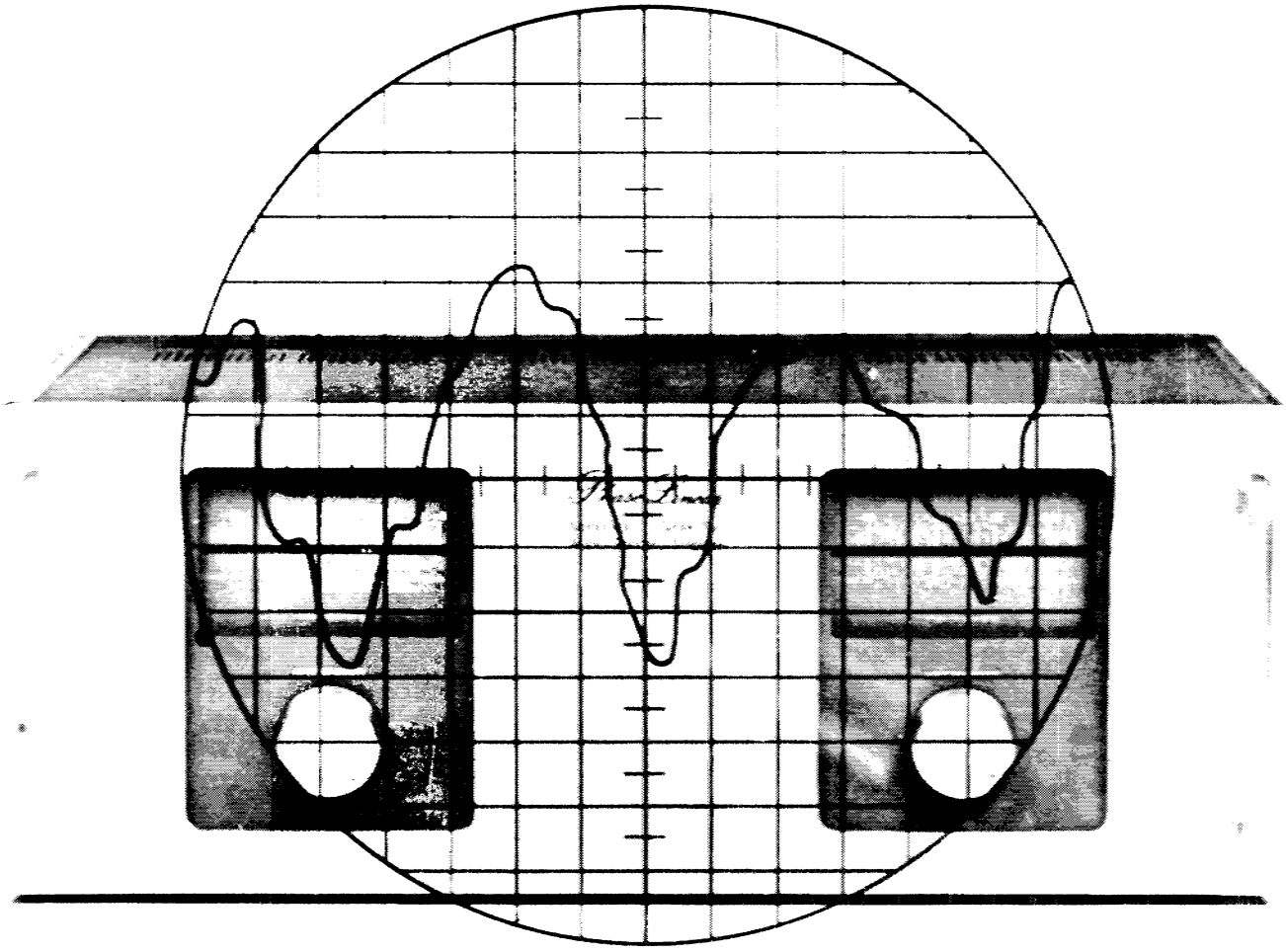

*Phase Linear*

# 400 SERIES TWO POWER AMPLIFIER

## SERVICE MANUAL

CONTENTS


1-0. Technical Specifications ..... 4
2-0. Schematics and Diagrams ..... 5
3-0. Circuit Descriptions ..... 12
4-0. Disassembly Procedure ..... 14
5-0. Test Procedure ..... 17
6-0. Troubleshooting Guide ..... 19
7-0. Parts List ..... 25
8-0. Service Bulletins and Supplements .. 26


**********CAUTION**********

THIS MANUAL IS INTENDED FOR USE ONLY BY QUALIFIED TECHNICAL SERVICE PERSONNEL. HAZARDOUS VOLTAGES MAY BE ENCOUNTERED IN THE TEST AND SERVICING OF THE 400 SERIES TWO. USE EXTREME CAUTION: READ ALL INSTRUCTIONS CAREFULLY.

1-0. Technical specifications

POWER OUTPUT: 210 watts minimum RMS per channel into 8 ohms from 20 Hz to 20K Hz with no more than 0.09% Total Harmonic Distortion.

CONTINOUS POWER: 260 watts per channel into 8 ohms @ 1000 Hz; 360 watts per channel into 4 ohms @ 1000 Hz.

TYPICAL TOTAL HARMONIC DISTORTION: 0.09% @ rated power output into 8 ohms @ 1000 Hz; 0.09% @ rated power output into 4 ohms @ 1000 Hz.

INTERMODULATION DISOTRTION: (60 Hz : 7K Hz = 4 : 1) less than 0.09% @ rated power output into 4 ohms.

FREQUENCY RESPONCE: 12 Hz to 40K, +0-1 dB.

SIGNAL-TO-NOISE RATIO: 110 dB (IHF "A-weighted").

RESIDUAL NOISE: 120 microvolts (IHF "A-weighted").

DAMPING FACTOR: 1000 : 1 @ 1000 Hz.

INPUT IMPEDANCE: 33K ohms minimum.

INPUT SENSITIVITY: 1.0 Volt RMS @ rated power output.

SPEAKER IMPEDANCE: Will accept 4 ohm or greater speaker load.

SLEW RATE: Better than 18 volts/microsecond.

RISE TIME: (Small signal) less than 4.0 microseconds.

PHASE SHIFT: 0 degrees @ 20 Hz; lagging 18 degrees @ 20K Hz.

POWER REQUIREMENTS: 60 Hz, 120 volt AC (USA and Canadian models) or 100-120 volt/220-240 volt AC, 50/60 Hz.

POWER CONSUMPTION: 1200 watts (10 amps) maximum @ rated output.

DIMENSIONS: 19"w X 7"h X 10"d (48.3cm X 17.8cm X 25.4cm).

WEIGHT GROSS: 35 lbs. (16kg).

## 2-0. SCHEMATICS AND DIAGRAMS


2-1. Schematic: PL36, Main PCB
2-2. Layout: PL36, Main PCB
2-3. X-ray view of PL36; wiring diagram.
2-4. Schematic: PL37, Display PCB
2-5. Layout: PL37, Display PCB
2-6. X-ray view of PL37, from foil side
2-7. Interconnect schematic

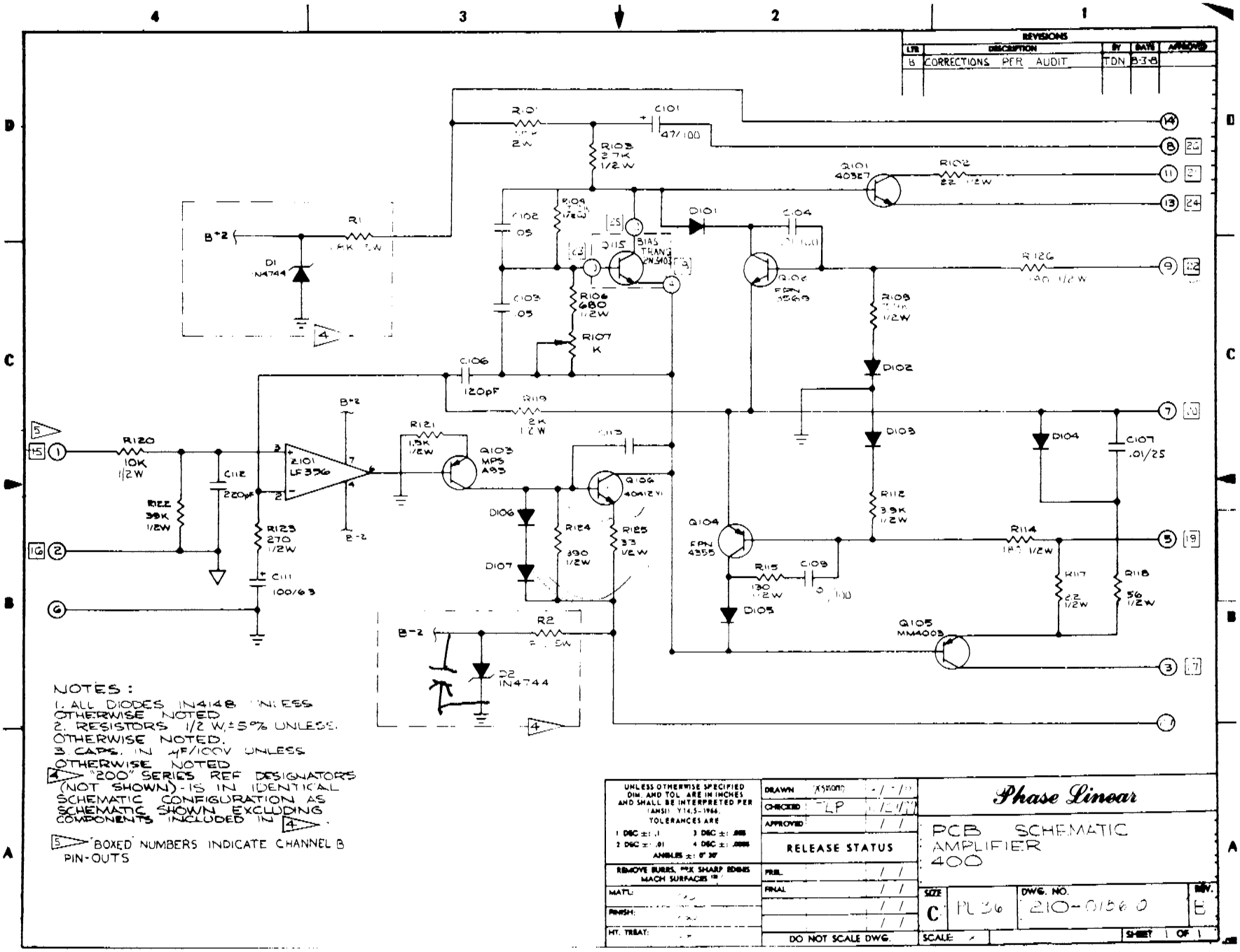


Diagram 2-1. Schematic: PL36, Main PCB.

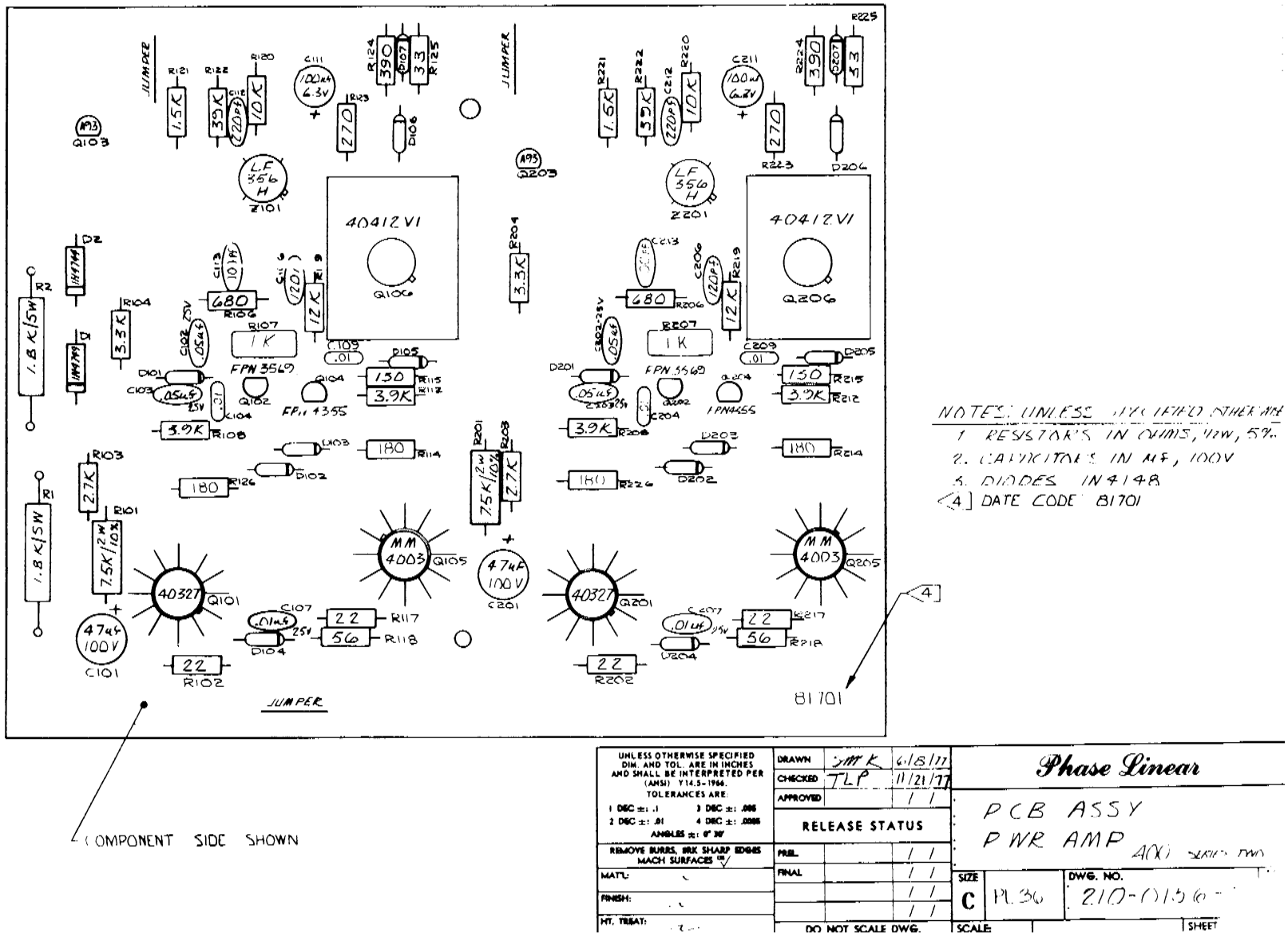


Diagram 2-2. Layout: PL36, Main PCB

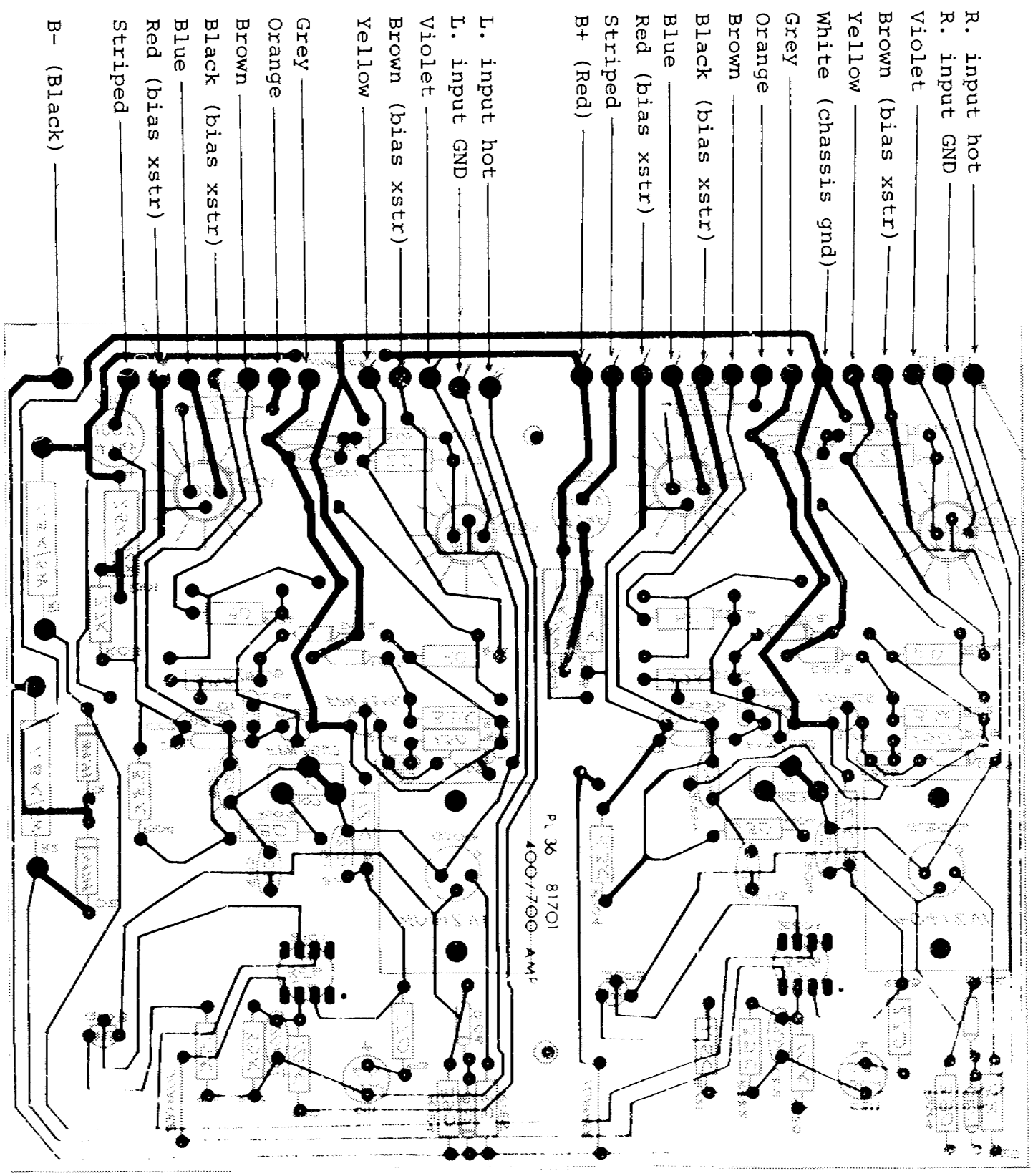


Diagram 2-3. X-ray view of PL36 and wiring diagram.

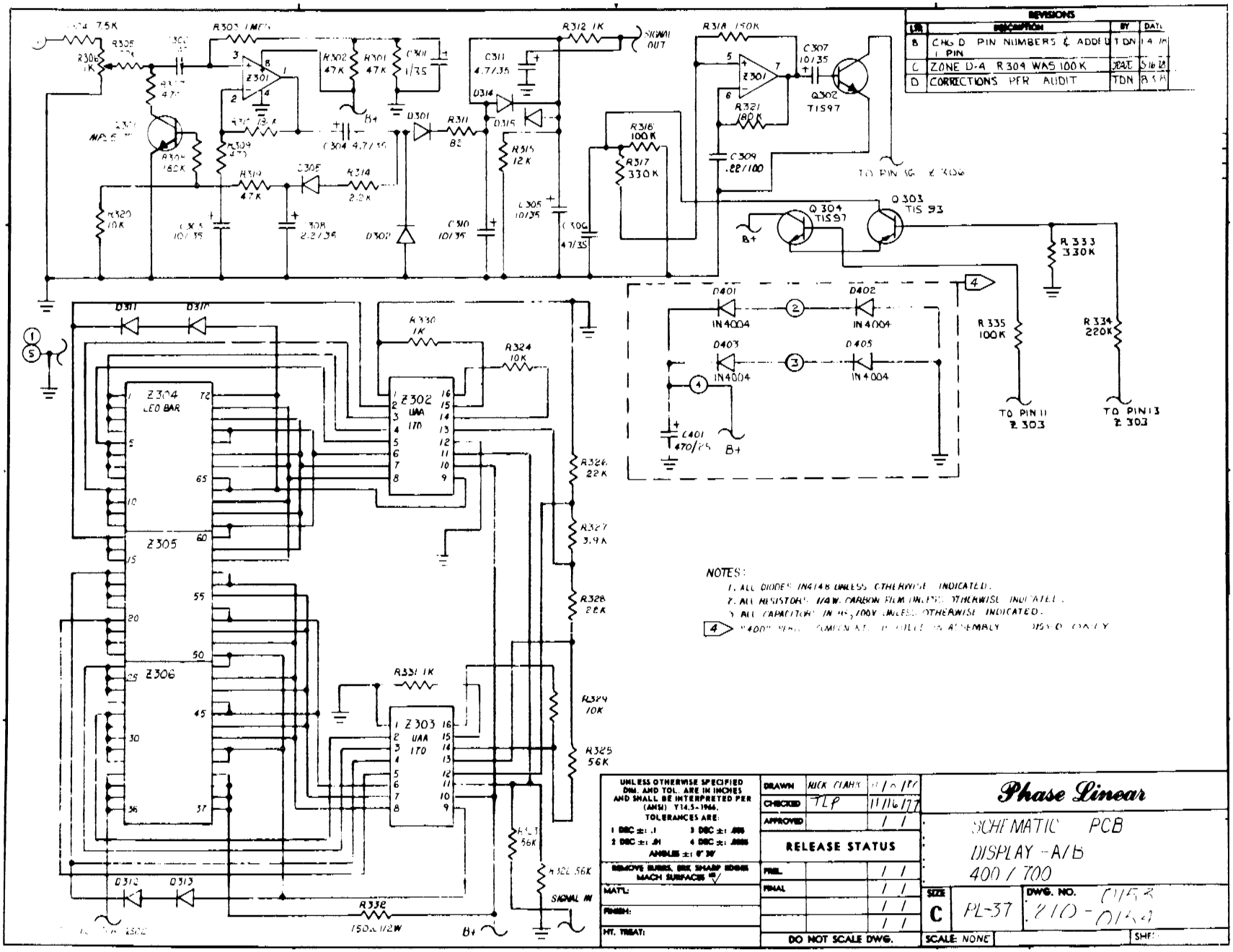


Diagram 2-4. Schematic: PL37, Display PCB.

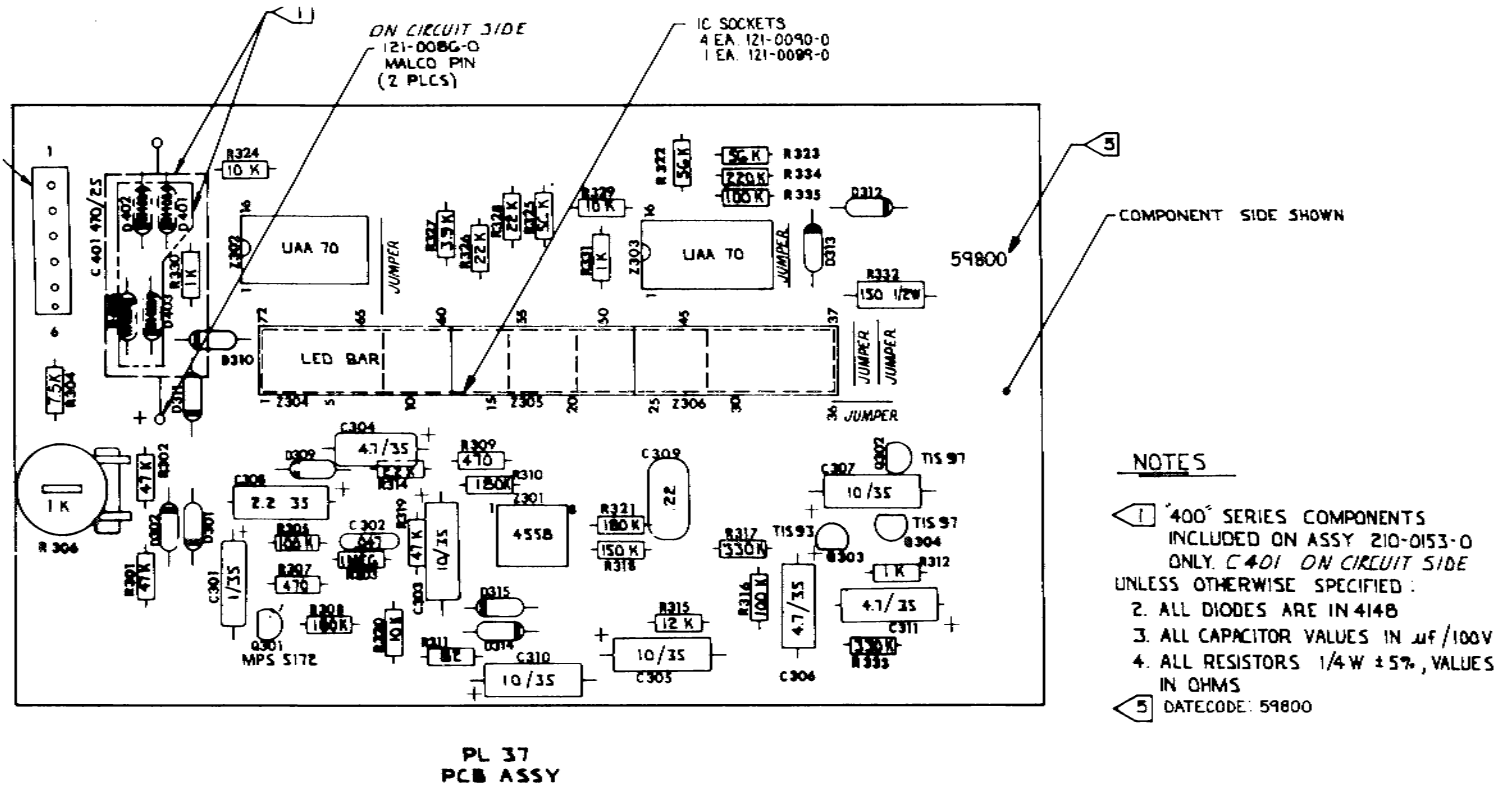


PL 37
PCB ASSY

Diagram 2-5. Layout: PL37, Display PCB.

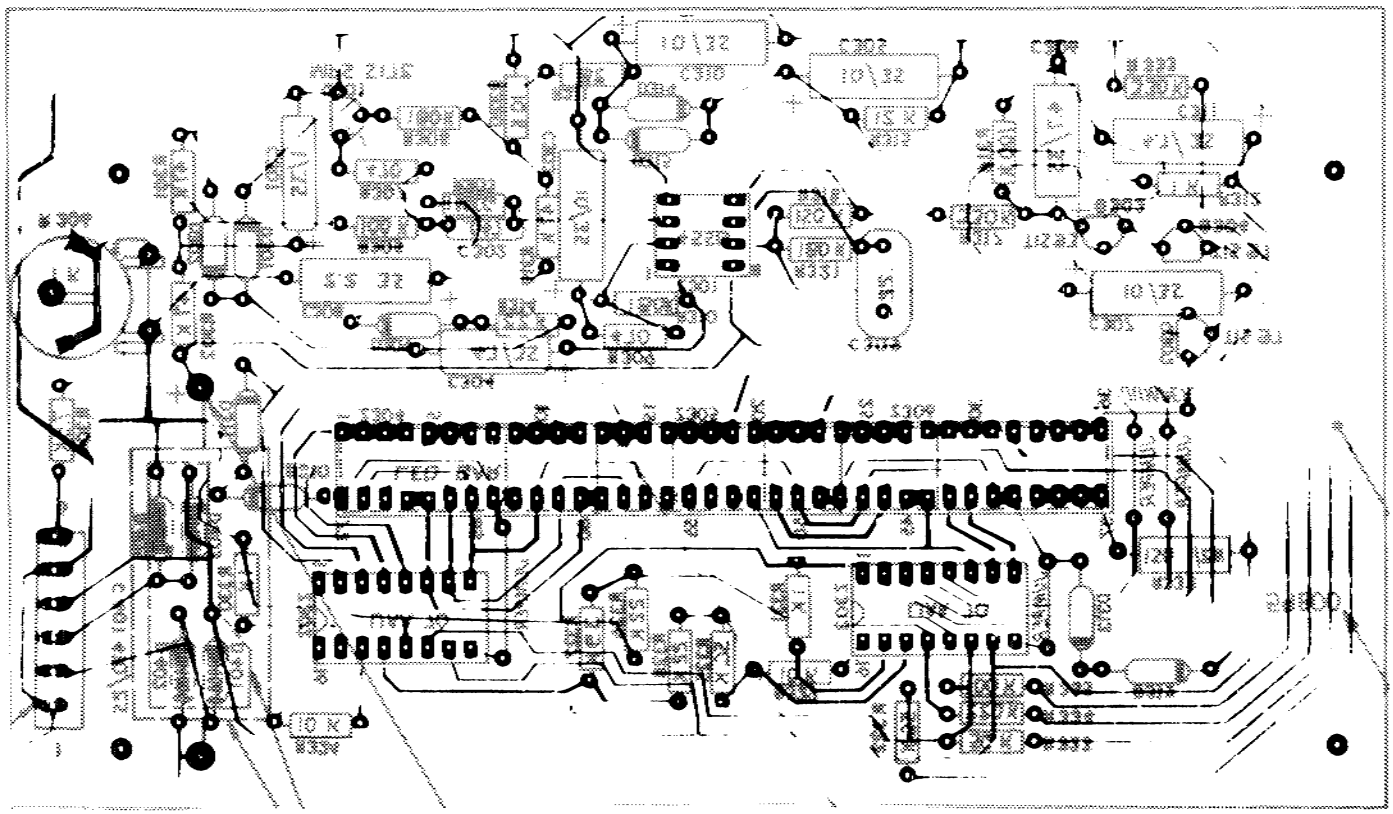

Diagram 2-6. X-ray view of PL37, from foil side.

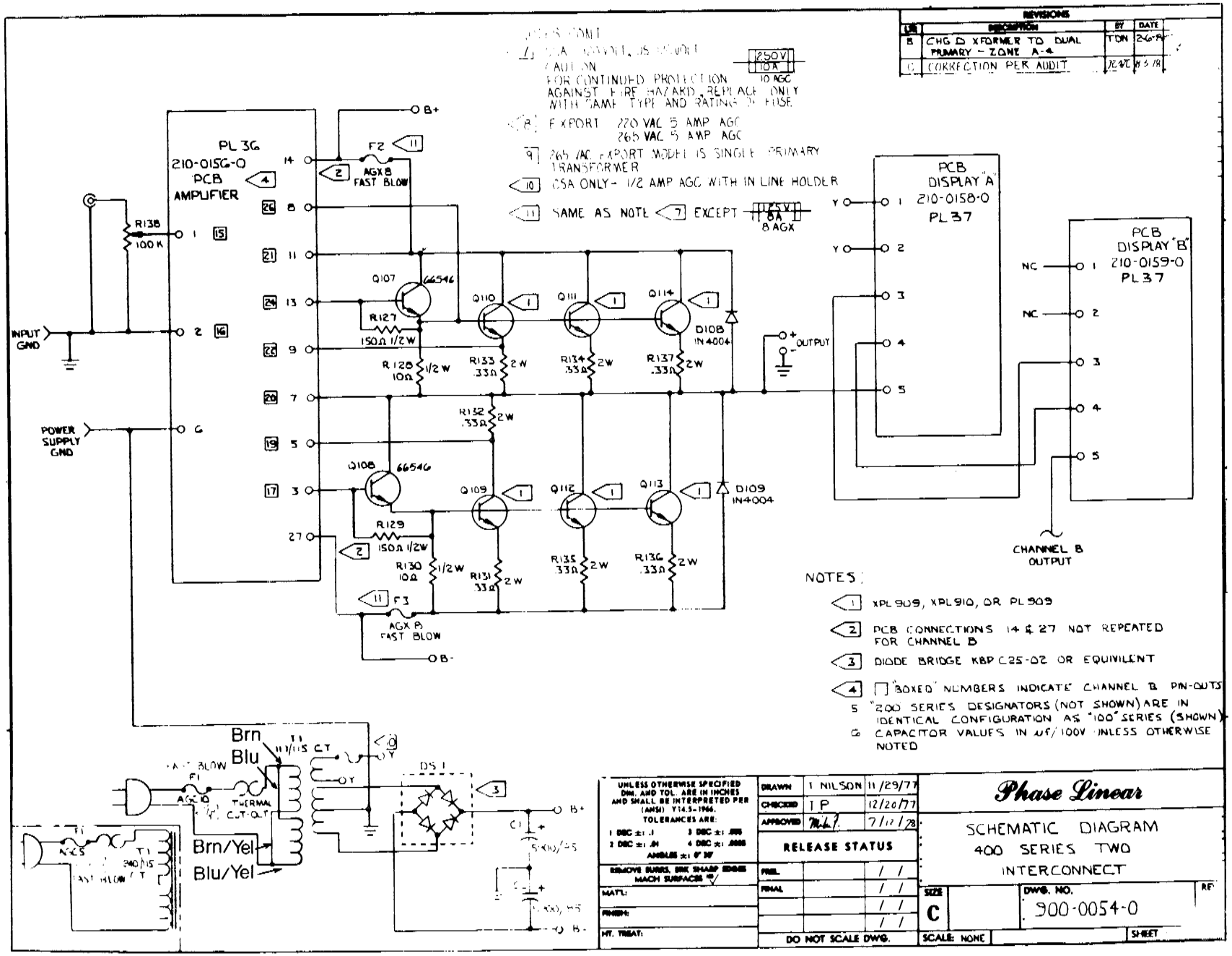


Diagram 2-7. Interconnect schematic.

3-0. 400II Circuit Description.

3-1. Power Amplifier. The Phase Linear Model 400 consists of two independent direct coupled linear amplifiers combined to form a single, dual channel unit capable of extremely high power output. Please refer to the schematic diagram for the following circuit description of the individual power amplifier.

The low level input stage employs a wideband low noise FET input integrated circuit operational amplifier (Op Amp) to provide high open loop voltage gain for minimum distortion. The input signal is applied to the noninverting input of the Op Amp while the inverting input receives a portion of the final output voltage forming a negative feedback loop. A transistor functioning as a voltage level shifter couples the output signal of the Op Amp to a common emitter amplifier. The common emitter amplifier stage, biased for class A operation, is capable of swinging the full power supply voltage of 160 volts, providing the final voltage gain of the amplifier. The output stage forms a unity voltage gain buffer, capable of delivering the required current.

A bootstrap arrangement is used to provide a high impedance load for the common emitter stage and at the same time increases the amount of drive current available to the positive predriver transistor allowing symmetrical saturation. Control of the amplifier idle current is accomplished with a transistorized biasing circuit (Vbe multiplier) which regulates the bias conditions of the predriver, driver, and output transistors. The bias regulator transistor is mounted on the output stage heat sink assembly to achieve proper thermal tracking and prevents the possibility of thermal runaway.

The output stage of each channel employs 8 high current, high voltage silicon power transistors arranged in a quasi-complementary format and biased for true class B operation. Most of the required bias current is carried by the driver transistors, resulting in very high circuit efficiency. In this design, the driver and predriver transistors serve to provide current amplification of the output signal from the common emitter stage to a level required by the parallel connected output transistors.

Voltage and current levels of the output transistors are monitored continuously during amplifier operation by the built-in, dual-slope protection circuit. The protection circuit consists of two transistors; one operates when the amplifier output is positive and the other operates when the amplifier output is negative. If the voltage and current levels in the output transistors become excessive,

the protection transistors will conduct to divert drive current entering the predriver transistors; thereby limiting the current flow in the output stage to a safe value.

3-2. LED Display. Output information is supplied from the amplifier to resistive divider R304-R306 which scales the voltage to appropriate levels for use by the low voltage circuitry involved in the display. This pad also sets the sensitivity of the displays.

The combination of Z301A and Q301 form a compressor to render the large changes in output level of the amplifier much smaller, such that roughly 45 dB of information may be displayed in the same area that would normally handle only 20 dB of dynamic range.

The output of the compression system is rectified by D301 and passed along to a series of resistors and capacitors. The purpose of these is to determine the dynamics of the display itself. The result of this network is a fast attack-slow decay characteristic allowing the prescribed peak responding metering system.

The combination of Z301B and Q302 is a retriggerable monostable which is activated by the compressor when it hits a level set by zener diode D303. R316, R317 and C309 set the frequency of the flasher and Q302 interfaces this system to the last four paralleled LEDs in the display.

Z302 and Z303 are a pair of voltage-controlled comparator/logic integrated circuits which are controlled by external resistive scaling and the input level provided by the compression amplifier. The outputs of these logic blocks are current sources which provide constant light level independent of power supply voltage.

## 4-0. DISASSEMBLY PROCEDURE

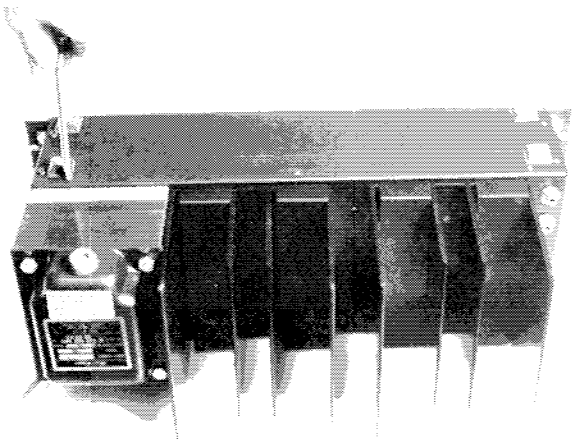

4-1. Be sure that the 400II line cord is unplugged, then remove the bottom cover (7 phillips screws).

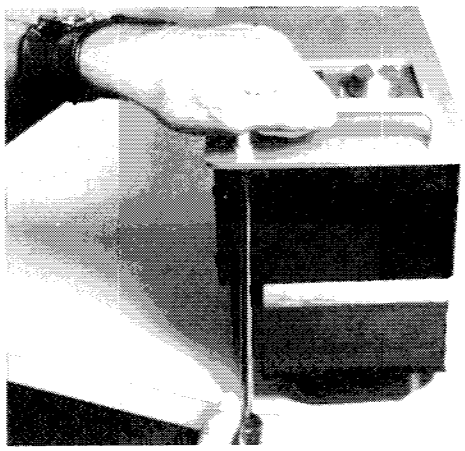

4-2. Position the amplifier with the front panel facing up. Loosen and remove all four handle screws; lift off the handles, ferrules and the front panel and set these aside (take care not to scratch these appearance parts).

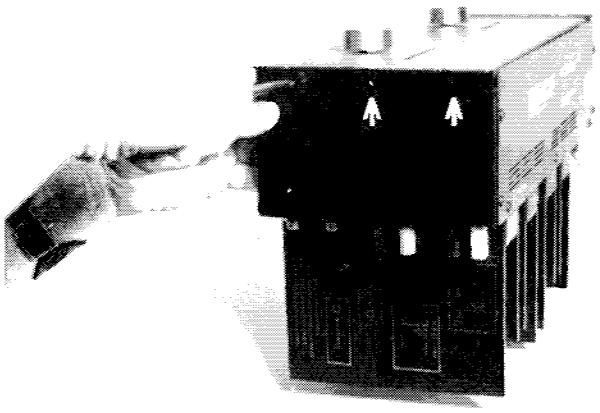

4-3. Remove the two middle and two lower sub-front mounting screws--do not remove the two upper screws.

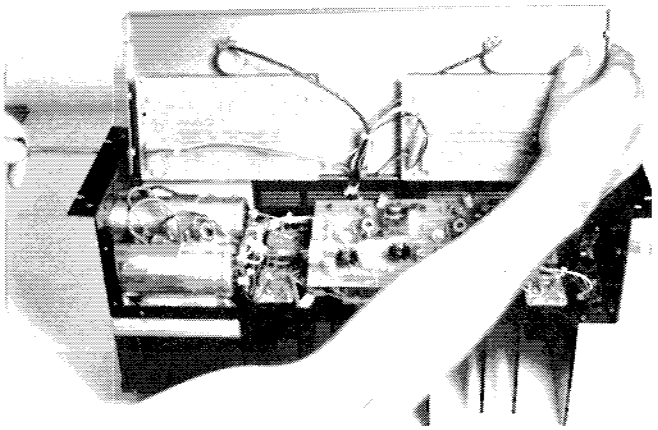

4-4. <u>Loosen only</u> both upper sub-front mounting screws and then rotate the sub-front to a vertical position. Tighten either screw to hold the panel in this position.

4-5. Remove both main PCB retainer nuts.

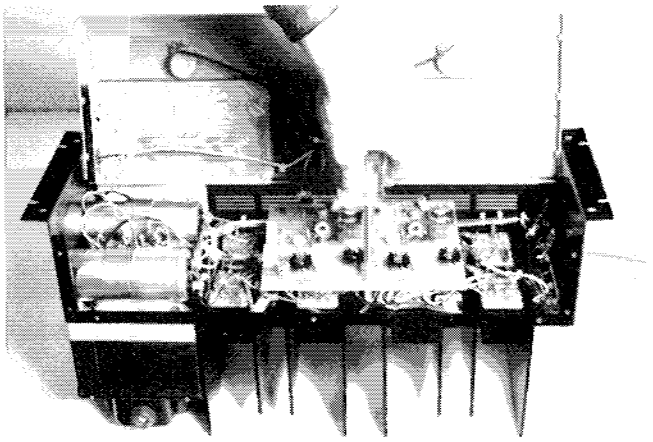

4-6. Carefully lift the main PCB from the mounting bolts and flip it over while pulling it forward to gain access to the foil side of the board.

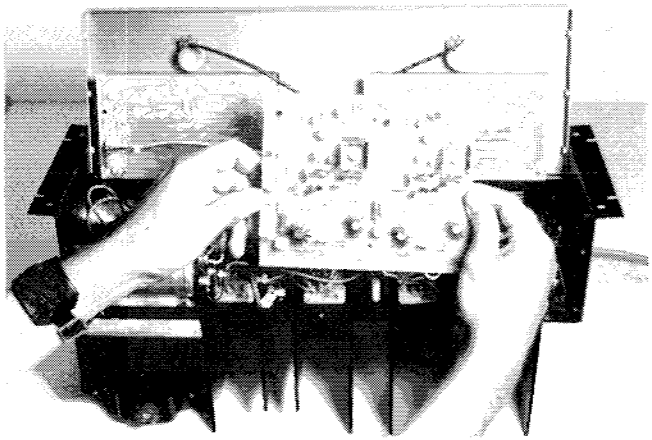

CAUTION: DO NOT ENERGIZE THE UNIT WITHOUT FIRST MAKING SURE THAT NONE OF THE COMPONENTS OR JUMPERS ON THE PCB ARE SHORTING TO THE CHASSIS OR HEATSINK ASSEMBLY.

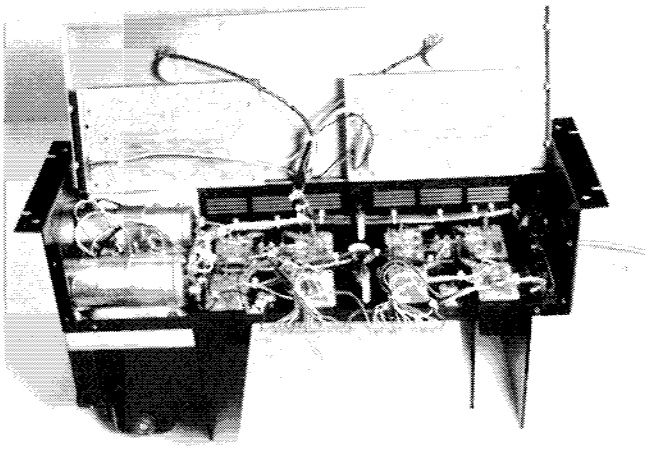

4-7. To gain access to the components on the display board, remove the four retainer nuts and slide the PCB off the mounting bolts.

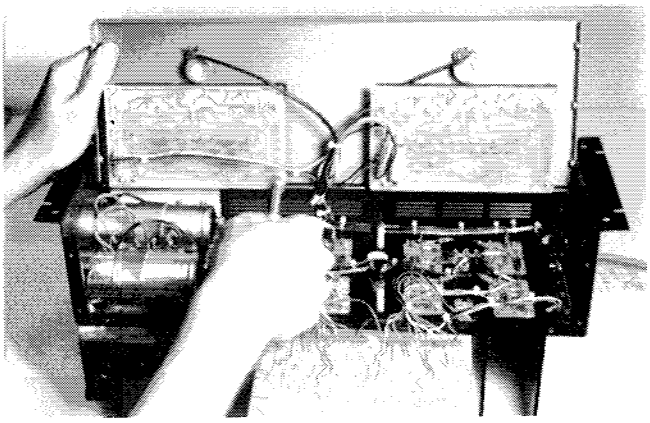

4-8. To re-assemble, reverse the above procedure.

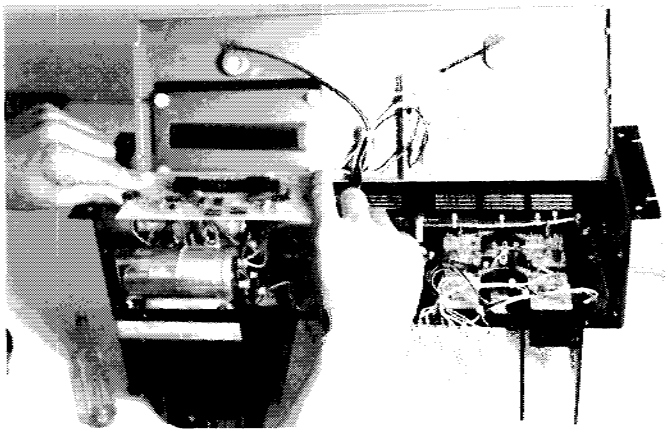

NOTE: When re-assembling the front panel, first tighten the handle screws, then tighten all six sub-front mounting screws while pulling upward as shown. This assures that the sub-front will fit properly behind the front panel.

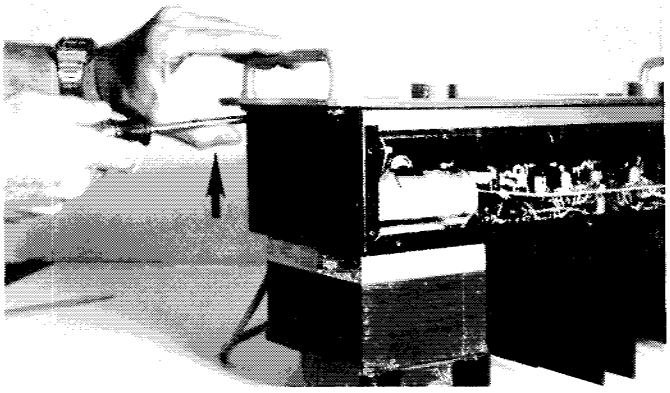

## 5-0. Test Procedure

Contents

5-1. Power supply
5-2. Energizing the unit
5-3. Output signal without load
5-4. Output signal with 8 ohm load
5-5. Distortion
5-6. Offset
5-7. Short circuit test
5-8. Display

Necessary equipment:

Low distortion audio signal generator
VOM or DVM
High impedance scope
250 watt 8 ohm load resistor

5-1. Power supply. Before plugging in the AC line cord on the 400, check all fuses: verify AGX-5 or AGX-8 fuses for the supply and AGC-10 for the line fuse (AGC-5 for 240 volt operation).

➤CAUTION: If any fuse is discovered blown, do not energize the unit, even after replacing the blown fuses(s). Follow the procedure in section 6-1 to properly energize the unit without causing possible further damage to the output stage.

5-2. Energizing the unit. Plug the line cord into a variable line transformer and slowly turn it up to 117 VAC or 230 VAC as required. If a line transformer is not available, plug the line cord directly into a working AC outlet or proper line voltage. Verify that the left-most LED spot in each display lights up.
Note: The LED spots may "jump" toward the right at the instant of turn-on, but should quickly settle to the extreme left position.

5-3. Output signal with no load. Monitor the left channel output with the scope and AC voltmeter. DO NOT connect any other load to the outputs at this time. Drive the left channel input with a 2K Hz sine wave until the output wave form is well into clipping. Verify that the clipping is symmetrical. Repeat the above with the right channel.

5-4. Output with 8 ohm load. Connect an 8 ohm 250 watt load resistor to the left channel output terminals and monitor the left channel output. Apply a 2K Hz signal to the left channel input and verify at least 40V RMS output before clipping. Repeat the above at 20 Hz, 200 Hz, and 20K Hz for both left and right channels.

5-5. Distortion. Monitor the left channel output with a THD analyzer. With an 8 ohm load connected also to the left channel output, drive the left channel to 40V RMS and verify a THD of 0.09% or less. Repeat this procedure with the right channel. This same procedure may also be used to test for IM distortion of 0.09% or less.

NOTE: It may be necessary to use the high filter in the THD analyzer if it is so equipped.

5-6. Offset. Measure across the output terminals of each channel for presence of DC voltage and verify ±10 mV or less with NO inputs connected to the unit.

5-7. Short circuit test. Drive the left channel with a 200 Hz signal to an output level of 40V RMS. Now short the output terminals with a jumper wire for 2 to 4 seconds. Remove the jumper and verify that the amplifier resumes normal operation. Repeat the above with the right channel.

5-8. Display. Remove all connections from the outputs except the scope and AC voltmeter, using these to monitor the output of either channel. Drive both inputs with a 60Hz sine wave, and slowly increase the input level while observing both LED arrays. Verify that all of the LED segments operate. Adjust the input level to obtain 40V RMS and verify that the 0 dB segment lights up within ±2 dB of this rated output level. Adjust the input level such that the left channel -20 dB segment is lit; verify that the right channel also displays -20 dB ±2 segments. Drive the amplifier well into clipping and verify that the last four right-hand segments flash and continue flashing 1 to 3 seconds after the input is removed.

## 6-0. TROUBLESHOOTING GUIDE

CONTENTS


6-1. Power supply malfunction

6-2. Unit will not energize properly

6-3. Output malfunction--no load

6-4. Output malfunction into a load

6-5. Excessive distortion/bias adjustment

6-6. Excessive offset

6-7. Protection circuit malfunction

6-8. Display malfunction


NOTE: Most transistors and diodes in the 400 can be checked in circuit using an ohmmeter on the RX1, RX10 or 2K scale. With the 400 power OFF, measure the forward-biased resistance of the particular diode or transistor junction and verify a reading of 400 to 700 ohms on a typical DVM for a good device. Actual readings on good devices will vary from meter to meter, and some meters do not have sufficient test voltage to turn on a semiconductor. Nevertheless the shorted or open device is usually revealed quickly using this in-circuit method.

➤CAUTION: BEFORE MAKING ANY MEASUREMENTS INTERNAL TO THE 400, UNLESS OTHERWISE SPECIFIED, BE SURE THAT THE LINE CORD IS UNPLUGGED AND THE POWER SUPPLY CAPACITORS ARE DISCHARGED--WAIT AT LEAST 5 MINUTES AFTER UNPLUGGING THE AMPLIFIER TO ENSURE THAT THESE CAPACITORS ARE DISCHARGED.
USE EXTREME CAUTION WHEN TAKING ANY MEASUREMENTS INTERNAL TO THE 400 WITH POWER ON--HAZARDOUS VOLTAGES ARE PRESENT. ONLY QUALIFIED PERSONNEL WITH PROPERLY INSULATED AND PROTECTED EQUIPMENT SHOULD ATTEMPT SERVICING OF THE 400 WITH POWER ON.

### 6-1. POWER SUPPLY MALFUNCTION

6-1.1. Blown supply fuse. If any of the supply fuses are found blown, there is a high probability that one or more of the output transistors is defective, especially if the blown fuse appears blackened or silvered (indicating large current surge).

➤CAUTION: Do not replace the fuse(s) and energize the unit at this point since this may cause further damage to the output stage. First perform the following test to check for defective output transistors:

6-1.2. Checking for shorted outputs. Be sure that the AC line cord of the 400 is UNPLUGGED, then follow the disassembly procedure, section 4-0. Place the negative probe of an ohmmete (set on the RX1, RX10 or 2K ohm scale) on the collector buss wire of one bank of output transistors. Touch the positive probe to any one of the output emitters in that bank. If any of the transistors in that bank are shorted, the meter will display a very low reading, usually less than an ohm.

If none of the outputs are shorted, the meter will display a typical reading for a forward biased diode (since measurement is essentially across flyback diodes D115 and D116), usually 400 to 700 ohms depending on the meter in use. Repeat the above for each remaining bank of transistors. Refer to 6-1.3. for isolation of a defective output transistor.

6-1.3. Isolating defective outputs. To isolate the defective output(s) in a bank which indicates a short, switch the ohmmeter to the lowest scale (RX1 or 200 ohm) and touch the positive probe to each output emitter in that bank, leaving the negative probe connected to the collector buss wire as in 6-1.2. One or two of the readings will be significantly lower than the rest, which indicates that that particular output transistor is shorted. Replace the defective output(s) and repeat the above until no short is indicated.

➤IMPORTANT: WHENEVER ANY OUTPUT TRANSISTOR HAS BEEN REPLACED IT IS NECESSARY TO PERFORM STEP 6-1.4. TO VERIFY PROPER CURRENT SHARING OF ALL OUTPUT TRANSISTORS.

6-1.4. Current sharing test. This test is necessary to verify that ALL outputs are operating properly, ensuring a permanent repair. Although the amplifier will probably meet all specs without all outputs operational, increased current loading of the remaining outputs will result in a significantly reduction in reliability.

a) With an 8 ohm load connected to the output terminals of the left channel, drive the left input with a 200 Hz signal to obtain 40 V RMS output. Turn the line voltage down to 75 VAC.

b) Using DC voltmeter, measure the voltage drop across the emitter resistors in each output bank. Verify that there is between 190 mV and 230 mV DC across each resistor.

c) Replace any output transistor whose emitter resistor reading varies more than 20% from the typical; verify first that the resistor itself is not damaged.

6-1.5. Blown line fuse.

a) Check for shorted power supply capacitor.

b) Check for shorted rectifier diode(s).

6-2. UNIT WILL NOT ENERGIZE PROPERLY

6-2.1. Unit blows line fuse at turn-on. Refer to section 6-1.5. for power supply troubleshooting procedure.

6-2.2. Unit blows supply fuse(s) at turn-on. This suggests output transistor failure; refer to section 6-1.1.

6-2.3. One or both LED spots remain toward the right. This indicates an output stage or front end failure causing DC at the output. Refer to sections 6-1.2. and 6-6.

6-3. OUTPUT MALFUNCTION--NO LOAD

6-3.1. No output, one or both channels.

a) Check for blown supply fuses or line fuse; refer to 6-1.

b) With power OFF, check all transistors and diodes in-circuit as described in 6-0.

c) Drive the inputs with 1 volt at 2K Hz; energize and check signal at pin 6 of Z101. Replace Z101 if necessary.

d) Excessive current drawn when voltage applied to the line cord:
-check the bias transistors carefully; replace if necessary. If the unit ceases to draw excess current to emitter, then replace the bias transistors.
-check outputs and output drivers (6-1.2,3.).

e) Isolate protection circuit as outlined in 6-3.2.c).

f) Check for loose, dirty, or worn input jacks.

6-3.2. Asymmetrical clipping.

a) Verify matched power supply readings at the filter capacitors in the main power supply. There should be no greater than 1 volt difference between positive and negative supply reading.

b) See 6-3.3.

6-3.3. Truncated or asymmetrical output.

a) Possible faulty protection circuit: disconnect one end of diodes D101 and D105 and repeat the test. If the problem is now removed, check and replace D101, D105, Q102, Q104, Q109, and Q110 as necessary.

b) Possible defective predriver or output driver; check Q101, Q105, Q107 and Q108.

c) Possible defective Class A stage; check Q106, D106 and D107.

6-3.4. Oscillations.

a) Check RC network located at the output terminals; replace if doubtful.

b) Replace predriver Q101, Q105 as necessary.

c) Replace output drivers Q107 and Q108 as necessary.

d) Check output transistor insulators: if these are the rubber self-lubricated type, there is a possibility of parasitic oscillations caused by output transistor casing biting through the insulator as a result of thermal cycling or overtightening. It is recommended that if this situation exists, the insulators be replaced with the mica type lubricated with thermal compound.

e) If oscillations (bursts) occur just before rated output at low test frequencies, be sure that line voltage at the line plug is 120 VAC.

NOTE: Several ferrite beads are positioned in the output stage buss wiring. These are carefully placed at the factory for maximum high frequency stability--it is recommended that these beads NOT BE ALTERED IN THE SLIGHTEST AMOUNT,

## 6-4. OUTPUT MALFUNCTION INTO A LOAD

6-4.1. Unit will not deliver 40 V RMS into 8 ohm load.

a) Check for line or variac voltage sag; voltage at the line plug must be at least 117 VAC when delivering full output.

b) Possible defective output transistor or driver; perform step 6-1.4.

6-4.2. Asymmetrical clipping (or loss of half of wave form).

a) Check protection circuit as outlined in step 6-3.3.

b) Check for balanced power supply voltage at the main filter capacitors while driving a load. If voltages differ by more than 2 volts, replace the capacitor which reads low.

c) Check for defective emitter resistors; perform 6-1.4.

## 6-5. EXCESSIVE DISTORTION

6-5.1. Improper bias setting. Check and adjust as follows:

a) Allow at least 5 minutes warm-up time; perform step 5-4 to accelerate warm-up.

b) Remove all input and output connections, then measure the DC voltage drop across R128 located in the output stage.

c) Verify a reading of no less than 0.35 VDC and no greater than 0.40 VDC. Adjust R107 as necessary.

6-5.2. THD analyzer adjustments.

a) Activate the 80K Hz filter on the analyzer if it is so equipped and repeat THD measurement.

b) Examine test bench grounding system for possible ground loops. Ground the analyzer directly to the 700 output ground, not to the load, scope or meter grounds. Use 16 guage wire for output ground system.

6-5.3. Defective protection circuit. Refer to 6-3.3.a),b).

## 6-6. EXCESSIVE OFFSET

a) Replace Z101

b) Verify +15 VDC ±10% across D1; replace if necessary.

c) Verify -15 VDC ±10% across D2; replace if necessary.

d) Replace Q103.

e) Replace C111.

6-7. PROTECTION CIRCUIT MALFUNCTION

6-7.1. Supply fuses open when amplifier is shorted. This indicates that the protection circuit is not shunting drive current properly.

a) Check Q102, Q104, D101, D105 and D102, D103.

b) Check R110,R127, Q109, Q110.

c) Perform step 6-1.4. to verify that all output transistors are functioning properly.

6-8. DISPLAY MALFUNCTION

6-8.1. One or more LED spots do not light.

a) Replace the appropriate LED array.

b) Replace Z302, Z303 as necessary.

6-8.2. 0 dB segment does not correspond to rated output level.

a) Adjust R306 as necessary.

6-8.3. Displays do not track within spec.

a) Replace Q301; verify that Q301 is an MPS5172 for both displays.

6-8.4. Malfunction of clipping indicator.

a) Very early productions of the display PCB contained a zener diode 1N4734, 5.1 V, between R312 and C305. If a display containing this zener exhibits premature or otherwise malfunctioning clipping indicator, replace this zener diode. If zener replacement does not render the display operable, replace BOTH display PCBs with the current type (both displays must be of the same design to track with spec).

b) Check Z301, Q302, Q303, Q304; replace as necessary.

# 7-0. PARTS LIST - 400 Series Two

| TRANSISTORS: | DESCRIPTION | PART NO. |
|---|---|---|
| XPL909/FPL909 | Q109-114 | NA |
| MJ15011 | Q109-114 | NA |
| TP9054/MJ15024 | Q109-114 | 126-0073 |
| 2SD555 | Q109-114 | 126-0068 |
| DB15025/MJ15025 | Q108,109,112, 113 (COMP) | 126-0123 |
| 2SB600 | Q108,109,112, 113 (COMP) | 126-0069 |
| SJ2741/RCA410 | Q107,108 | 126-0016 |
| RCA66546 | | |
| 40412V1 | Q106 | 126-0005 |
| 40327 | Q101 | 126-0007 |
| MM4003 | Q105 | 126-0006 |
| MPS-A93 | Q103 | 126-0028 |
| TIS93 | Q303 | 126-0009 |
| TIS97 | Q302,304 | 126-0020 |
| GES97 | Q302,304 | 126-0033 |
| MPS-5172 | Q301 | 126-0010 |
| 2N3403 | Q115 | 126-0018 |
| PN3569 | Q102 | 126-0044 |
| PN4355 | Q104 | 126-0045 |

| INTEGRATED CIRCUITS: | | |
|---|---|---|
| LF356 | Z101 | NA |
| LF351 | Z101 | 126-0114 |
| RC4558 | Z301 | 126-0038 |
| UAA170 | Z302,303 | 126-0048 |

| DIODES: | | |
|---|---|---|
| S25A20 | BRIDGE | 126-0001 |
| 1N4148 | D101-107 | 126-0002 |
| 1N4004 | D108,109 | 126-0003 |
| 1N4744:15V | D1,2 | 126-0064 |
| 1N752:5.6V | | 126-0049 |
| FNA12 | LED ARRAY | 126-0050 |

| CAPACITORS: | | |
|---|---|---|
| 5900/85V | LYTIC | 127-0021 |
| 470/25V | LYTIC | 127-0102 |
| 100/6.3V | LYTIC | 127-0033 |
| 47/35V | LYTIC | 127-0032 |
| 10/35V | LYTIC | 127-0035 |
| 5/35V | LYTIC | 127-0037 |
| 2.2/35V | LYTIC | 127-0068 |
| 1/35V | LYTIC | 127-0036 |
| .33/100V | MYLAR | 127-0027 |
| .22/100V | MYLAR | 127-0028 |
| .1/100V | MYLAR | 127-0015 |
| .05/25V | DISC | 127-0007 |
| .01/100V | MYLAR | 127-0063 |
| .01/100V | DISC | 127-0005 |
| 220pf/100V | DISC | 127-0042 |
| 120pf/100V | DISC | 127-0020 |

| RESISTORS AND POTS: | | |
|---|---|---|
| 1.8k/5W | | 128-0372 |
| 7.5k/2W | | 128-0366 |
| 7.5k/5W | | 128-0386 |
| 5/5W | | 128-0381 |
| .33/2W | | 128-0350 |
| 100k:B | INPUT SENS | 129-0005 |
| 1k:B | TRIM:HOR | 129-0096 |
| 1k:B | TRIM:VERT | 129-0073 |

| SWITCHES AND RELAYS: | | |
|---|---|---|
| SW: | THERMAL:NC | 129-0030 |

| TRANSFORMERS AND INDUCTORS: | | |
|---|---|---|
| XFMR:115VCT | PWR | 125-0033 |

| PRINTED CIRCUIT BOARDS: | | |
|---|---|---|
| PL36:QUASI COMP | PWR DRIVE* | 210-0156 |
| PL36:FULL COMP | PWR DRIVE* | 210-0321 |
| PL37: | DISPLAY:A | 210-0159 |
| PL37: | DISPLAY:B | 210-0158 |

| FRONT PANEL COMPONENTS: | | |
|---|---|---|
| PANEL:STD | FRONT | 220-0038 |
| PANEL:RACK | FRONT | 220-0064 |
| PANEL: | SUB FRONT | 220-0040 |
| KNOB:1.5" | AP/PO** | NA |
| KNOB:1.42" | SM/PO** | 142-0048 |
| HANDLE: | RACK | 142-0029 |
| FERRULE: | HANDLE | 143-0015 |
| GLASS: | DISPLAY | 141-0072 |
| BEZEL: | DISPLAY | 141-0118 |
| GASKET: | DISPLAY | 141-0119 |

| METALWORK: | | |
|---|---|---|
| COVER: | TOP | 220-0048 |
| COVER: | BOTTOM | 141-0099 |
| CHASSIS: | | 141-0125 |
| HEATSINK:LG | OUTER | 141-0005 |
| HEATSINK:SM | INNER | 141-0025 |
| HEATSINK: | EXTRUDED | 142-0025 |
| COVER:TO-3 | OUTPUT XSTR | 141-0030 |
| END BELL:XFMR | OUTER | 142-0015 |
| END BELL:XFMR | INNER | 142-0003 |
| BRACKET: | FILTER CAP | 141-0140 |

| HARDWARE: | | |
|---|---|---|
| SCR: | HANDLE | 122-0092 |
| SCR: | TOP/BOTTOM | 122-0123 |
| SCR: | M:6-32X1/2 | 122-0004 |
| SCR:TO-3 | 6X5/8 | 122-0007 |
| NUT: | KEP:6-32 | 122-0018 |

-over-

MISCELLANEOUS:

| | | |
|---|---|---|
| JACK: | PHONO | 121-0002 |
| BINDING POST: | WHT | 121-0006 |
| BINDING POST: | RED | 121-0007 |
| BINDING POST: | BLK | 121-0008 |
| FUSEHOLDER: | AGC/3AG | 121-0010 |
| FUSEHOLDER: | AGX/8AG | 121-0011 |
| FUSE: | AGC/3AG 10A | 121-0039 |
| FUSE: | AGX/8AG 8A | 121-0038 |
| SOCKET: | TO-3 | 121-0014 |
| INSULATOR: | TO-3 | 121-0015 |
| MANUAL: | OWNERS | 157-0015 |
| MANUAL: | SERVICE | - - |
| AC CORD: | 18/2 | 121-0016 |

*One half credit will be allowed toward the purchase of a new power drive PCB if the order is submitted with the old power drive PCB.

**AP-aluminum over plastic PO-push on
SM-solid metal SS-set screw
BP-black plastic

## 8-0. Service Bulletins and Supplements

This section of the 400 Series Two Service Manual is reserved for the inclusion of any service bulletins, troubleshooting or other supplements which apply to the 400 Series Two.

Phase Linear CORPORATION

5/79

20121 - 48th Avenue West, LYNNWOOD, WASHINGTON 98036 U.S.A. Telephone: (206) 774-3571

SERVICE BULLETIN #5179

SUBJECT: 400II and 700II Universal LED Display PC Boards

Starting with model 400II serial number 29000 and model 700II serial number 10000 we began using universal LED display circuit boards. The changes are: 1) R304 is now 15K on both models, 2) the 700II -20dB display range switch resistors (R137) are now 120K ohm, 3) the blue trim pot has been changed such that the wiper now goes to R305, and 4) Q301 is now a GES 97. On both models the Channel B PC board contains the power supply for the displays as before.

Earlier displays had either a blue trim pot, a red trim pot, or no trim pot at all; these boards <u>are not</u> compatible with the latest board design in terms of equal tracking.

We do have the earlier type displays in stock. You <u>must</u> specify model, serial number, and which type of display circuit board you require when ordering.

| | | | | | | |
|---|---|---|---|---|---|---|
| Early 400II | Channel | A | Display | Part | No. | 210-0159-0 |
| " | " | B | " | " | " | 210-0158-0 |
| Early 700II | Channel | A | Display | Part | No. | 210-0154-0 |
| " | " | B | " | " | " | 210-0153-0 |
| Universal | Channel | A | Display | Part | No. | 210-0159-0 |
| " | " | B | " | " | " | 210-0158-0 |

If you have any questions feel free to contact the factory service department at the above address or phone number.

PHASE LINEAR SERVICE DEPARTMENT

Phase Linear CORPORATION 1979

20121 - 48th Avenue West, LYNNWOOD, WASHINGTON 98036 U.S.A. Telephone: (206) 774-3571

SERVICE BULLETIN

SUBJECT: Front End (Input) IC's in Models 400IIand 700II PC Boards

In the first year production runs of the models 400 and 700 Series Two PL36 PC driver boards we used a TO-99 packaged Fairchild or Signetics LF356 front end BI-FET op amp. This particular IC package was found to cause an unacceptable turn-off "thump" in some amplifiers. We later discovered and used in production a 8-pin mini-DIP packaged LF356 (National) which reduced this thump.

As of about May of 1979 all production runs of the PL36 driver board began using a National LF351 IC (Phase Linear part number 126-0114) which was found to have a better slew rate, slightly lower distortion, and substantially reduced the delayed turn-off thump. They are also cheaper.

If a model 400 or 700 Series Two amplifier has excessive delayed turn-off noise the front end IC's should be replaced with the LF351. These are a direct retrofit device and require no additional modification to the PC board.

PHASE LINEAR SERVICE DEPARTMENT
20121 48th Ave. West
Lynnwood, WA 98036
(206)774-8848
(206)774-3571

Phase Linear Corporation
20121-48 Avenue West
Lynnwood, Washington 98036 USA
206 774-3571 TWX 9104492851

Service Bulletin 9/24/80

Subject: Model 400 II and 700 II op-amp supply dropping resistors

Early Series Two amplifiers Models 400 II and 700 II used the type LF356 input op-amp which required relatively high supply current. Later and current production runs use the LF351 op-amp which requires less supply current. Because of this change in current demand the dropping resistors (R1 and R2) were changed to 7.5 Kilohms/5 watt (previously 2.4 Kilohm/5 watt for Model 700 II and 1.8 Kilohms/5 watt for Model 400 II).

The 2.4 Kilohm and 1.8 Kilohm resistors are no longer stocked, therefore, if either resistor requires replacement both the resistors and the op-amp (if originally fitted with LF356's) should be changed to 7.5 Kilohms/5 watt and LF351's.

NOTE: An added benefit to this change is that the LF351 IC has a much lower turn-off transient.

Phase Linear Corporation
20121-48 Avenue West
Lynnwood, Washington 98036 USA
206 774-3571 TWX 9104492851

SERVICE BULLETIN 10-81

Model 400II/700II(Complimentary)

Subject: Revision of model 700II and 400II from quasi-complimentary to full complimentary output stages.

700IIs beginning with serial number 7A10701 and 400IIs beginning with serial number 4A31658 contain fully complimentary output stages. XPL909s(Delco) and FPL909s(Fairchild) are no longer used. The new amps will have either TP9054 NPN (Motorola MJ15024) and DB15025 PNP (Motorola MJ15025) or 2SD555 NPN and 2SB600 PNP (NEC brand) output transistors. An added advantage to this change is that we now use the same devices for both output and output driver transistors.

The drive PCBs are identical except for the value of R127&128 (56k for the 700II and 82k for the 400II). Refer to the revised wiring diagram below and the enclosed revised schematic.

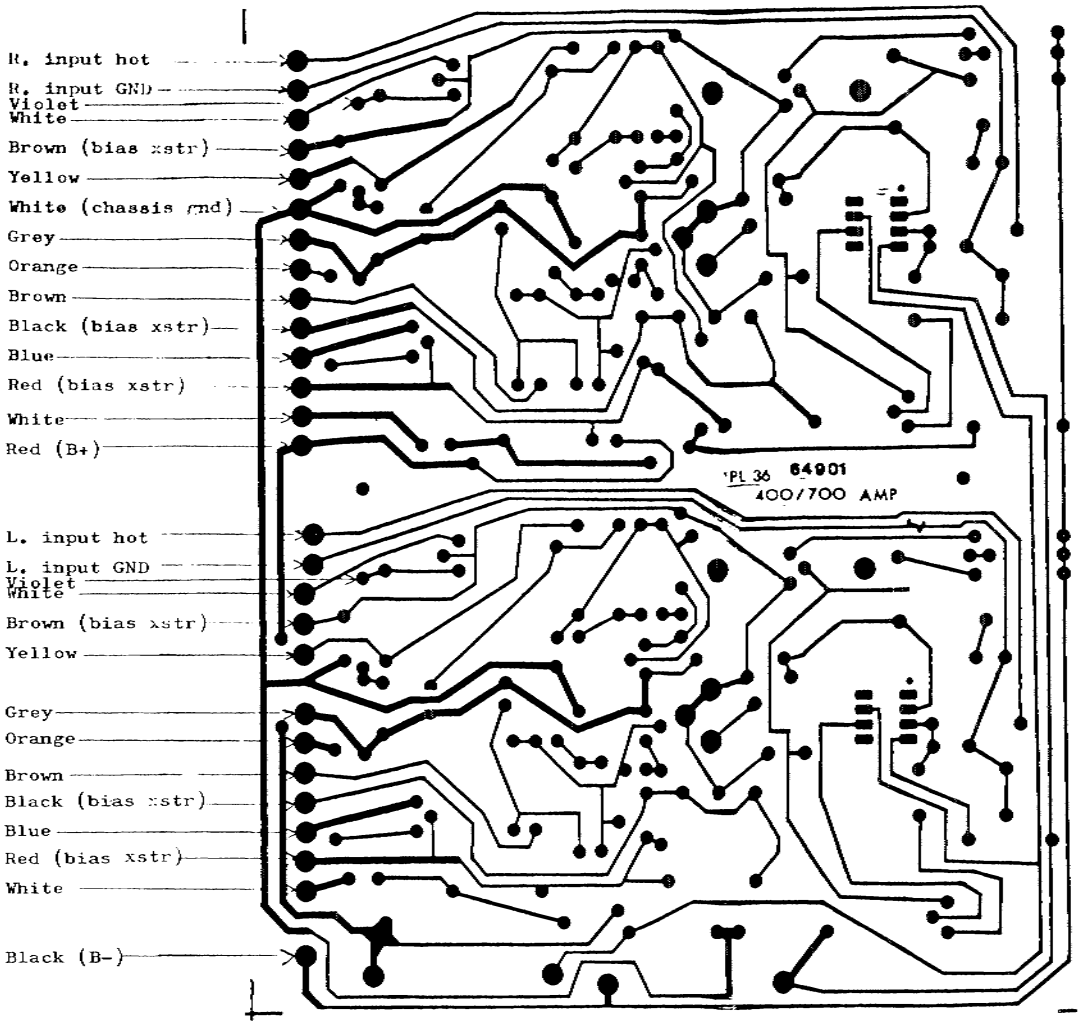

| REVISIONS | | | | |
|---|---|---|---|---|
| LTR | DESCRIPTION | BY | DATE | APPROVED |
| A | PER ECO 1049 | [illegible] | 1-31-80 | |

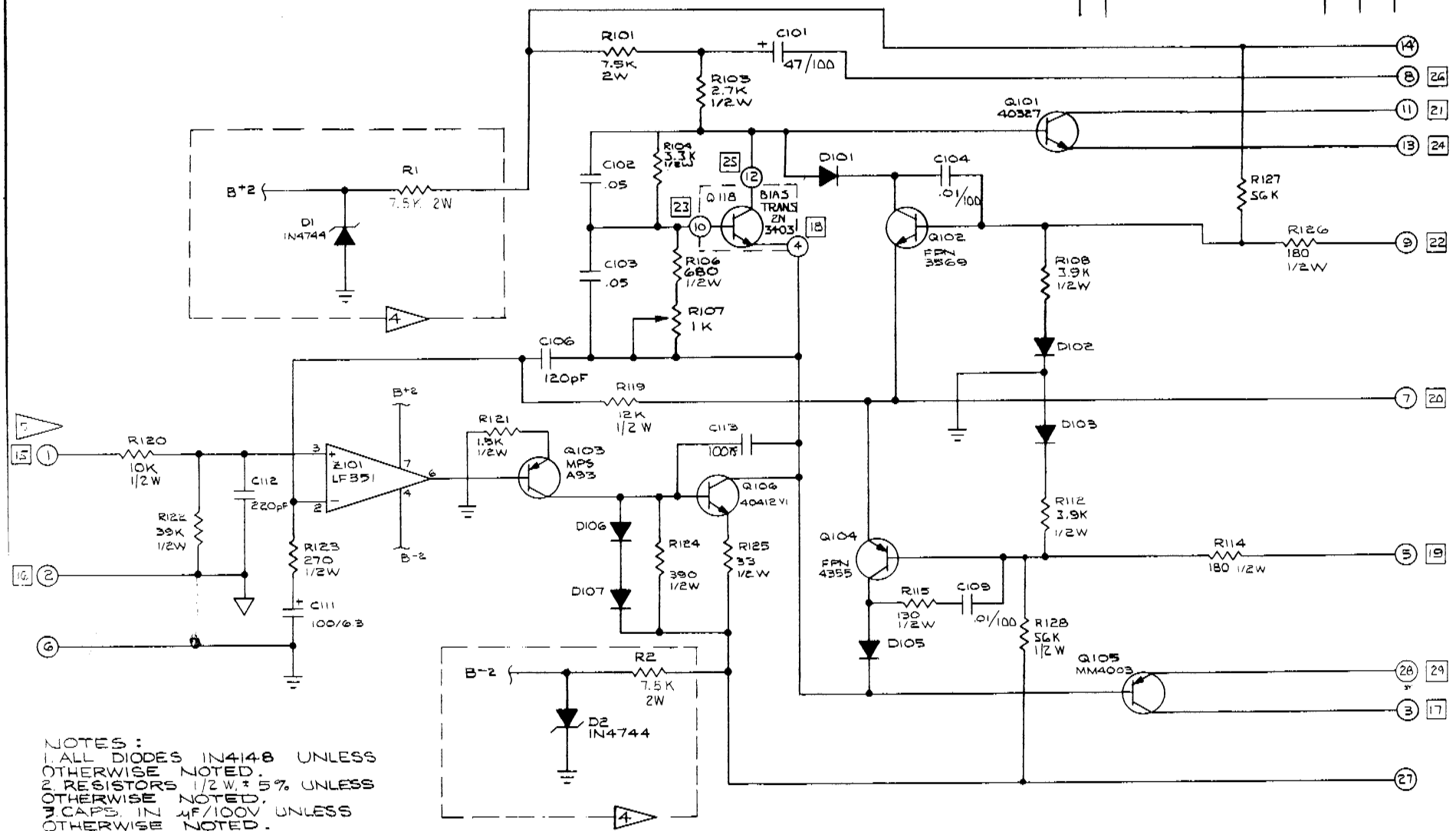


NOTES:
1. ALL DIODES 1N4148 UNLESS OTHERWISE NOTED.
2. RESISTORS 1/2 W, ± 5% UNLESS OTHERWISE NOTED.
3. CAPS. IN µF/100V UNLESS OTHERWISE NOTED.
4. "200" SERIES REF. DESIGNATORS (NOT SHOWN) - IS IN IDENTICAL SCHEMATIC CONFIGURATION AS SCHEMATIC SHOWN, EXCLUDING COMPONENTS INCLUDED IN — 4
5. "BOXED" NUMBERS INDICATE CHANNEL B PIN-OUTS

| | | | |
|---|---|---|---|
| UNLESS OTHERWISE SPECIFIED DIM. AND TOL. ARE IN INCHES AND SHALL BE INTERPRETED PER (ANSI) Y14.5-1966. TOLERANCES ARE: 1 DEC ±: .1 2 DEC ±: .01 3 DEC ±: .005 4 DEC ±: .0005 ANGLES ±: 0° 30' | DRAWN | DESMOND | 6/13/77 |
| | CHECKED | TLP | 12/29/77 |
| | APPROVED | | / / |
| | RELEASE STATUS | | |
| REMOVE BURRS, BRK SHARP EDGES MACH SURFACES | PREL. | | / / |
| MAT'L: | FINAL | | / / |
| FINISH: | | | / / |
| HT. TREAT: | DO NOT SCALE DWG. | | / / |

*Phase Linear*

PCB SCHEMATIC
AMPLIFIER
700/400 SERIES TWO (COMP)

| SIZE | | DWG. NO. | REV. |
|---|---|---|---|
| C | PL 36 | 210-0290-0 | A |

SCALE: SHEET 1 OF 1

| REVISIONS | | | | |
|---|---|---|---|---|
| LTR | DESCRIPTION | BY | DATE | APPROVED |
| H | PER ECO 916 - RESISTORS MOVED | RAT | 3-3-80 | |
| B | CHG'D XFORMER TO DUAL PRIMARY - ZONE A4 | TDN | 2-6-78 | |
| C | ZONE C-2 WAS R135, R136 10Ω 2W IS R135 5Ω 5W | RAT | 5-10 | |
| D | CORRECTION PER AUDIT | RAT | 8-3-78 | |
| E | PER ECO 734 NOTE 4 WAS XPL 909 OR FR 909 | RAT | 1-29-79 | |
| F | PER ECO 820 ZONE C1 & C2, R134 & R137 WERE 82K NOW 120K | RAT | 4-17-79 | |
| G | ECO 1035 - ADDED CAPS - ZONE A3 | RAT | 1-5-80 | |

NOTES CONT. —

8. CSA 120 VOLT, US 120 VOLT — 250V 10A 10 AGC
   CAUTION — FOR CONTINUED PROTECTION AGAINST FIRE HAZARD, REPLACE ONLY WITH SAME TYPE AND RATING OF FUSE.
9. EXPORT 220 5 AMP AGC; 265 5 AMP AGC
10. 265 VAC EXPORT MODEL IS SINGLE PRIMARY TRANSFORMER
11. .007 INCH DIA. COPPER WIRE
12. SAME AS NOTE 8 EXCEPT — 125V 6A AGX 5

PL 36
210-0150-0
PCB
AMPLIFIER

INPUT SW1 DC/NORM
C105 47
R138 100K VOLUME
R101 220K
INPUT GND

F2 AGX 5 FAST BLOW
F3 AGX 5 FAST BLOW
B+
B-

Q107 Q109 Q110 Q112 Q114 Q116 — 4A
R139 180Ω 1/2W CC
C110 .33
D107 IN4004

R109 10Ω 1/2W CC
R110 .33Ω 2W
R113 .33 2W
R130 .33Ω 2W
R131 .33Ω 2W
R133 .33Ω 2W

MTR SW2 RANGE
R134 120K
R135 5Ω 5W
C108 .1

PCB DISPLAY A
210-0158-0
PL 37

PCB DISPLAY B
210-159-0
PL 37

MTR SW3 RANGE
R137 120K
CHANNEL B OUTPUT

R116 10 1/2W
R127 .33Ω 2W
R128 .33 2W
R129 .33 2W
R132 .33 2W
R133 .33 2W

180Ω 1/2W CC R140
Q108 Q110 Q111 Q113 Q115 Q117 — 4B
D108 IN4004
C111 .33

28, 29
3, 17

FAST BLOW F1 AGC 10 (8,9)
POWER SWITCH
THERMAL SWITCHES
T1 117/148CT
CSA 1/2 AMP
.0027/150 VAC
C112 .0027/150 VAC
C113 9800/100
C114 9800/100
F1 AGC 5 (9,10) FAST BLOW
T1 240/148CT

NOTES

— UNLESS OTHERWISE NOTED —

1. RESISTORS ARE 1/4 W 5% CARBON FILM
2. CAPACITOR VALUES ARE IN μF / 100V
3. DIODE BRIDGE - KBP C25-02 OR EQUAL
4A. TP 9054 4B. MJ15025
5. "BOXED" NUMBERS INDICATE CHANNEL B PIN-OUTS
6. "200" SERIES DESIGNATORS (NOT SHOWN) ARE IN IDENTICAL CONFIGURATION AS "100" SERIES (SHOWN)
7. PCB CONNECTIONS 14 & 27 NOT REPEATED FOR CHANNEL B

UNLESS OTHERWISE SPECIFIED DIM. AND TOL. ARE IN INCHES AND SHALL BE INTERPRETED PER (ANSI) Y14.5-1966.
TOLERANCES ARE:
1 DEC ±: .1 — 3 DEC ±: .005
2 DEC ±: .01 — 4 DEC ±: .0005
ANGLES ±: 0° 30'
REMOVE BURRS, BRK SHARP EDGES MACH SURFACES 125
MAT'L:
FINISH:
HT. TREAT:

| | | |
|---|---|---|
| DRAWN | T. NILSON | 12/1/77 |
| CHECKED | TP | 12/20/77 |
| APPROVED | Mike | 7/12/78 |
| RELEASE STATUS | | |
| PREL. | | / / |
| FINAL | | / / |
| | | / / |
| | | / / |
| DO NOT SCALE DWG. | | |

Phase Linear

SCHEMATIC DIAGRAM
700 SERIES TWO (COMP)
INTERCONNECT

| SIZE | DWG. NO. | REV. |
|---|---|---|
| C | 900-0053-0 | H |

SCALE: NONE — SHEET 1 OF 1

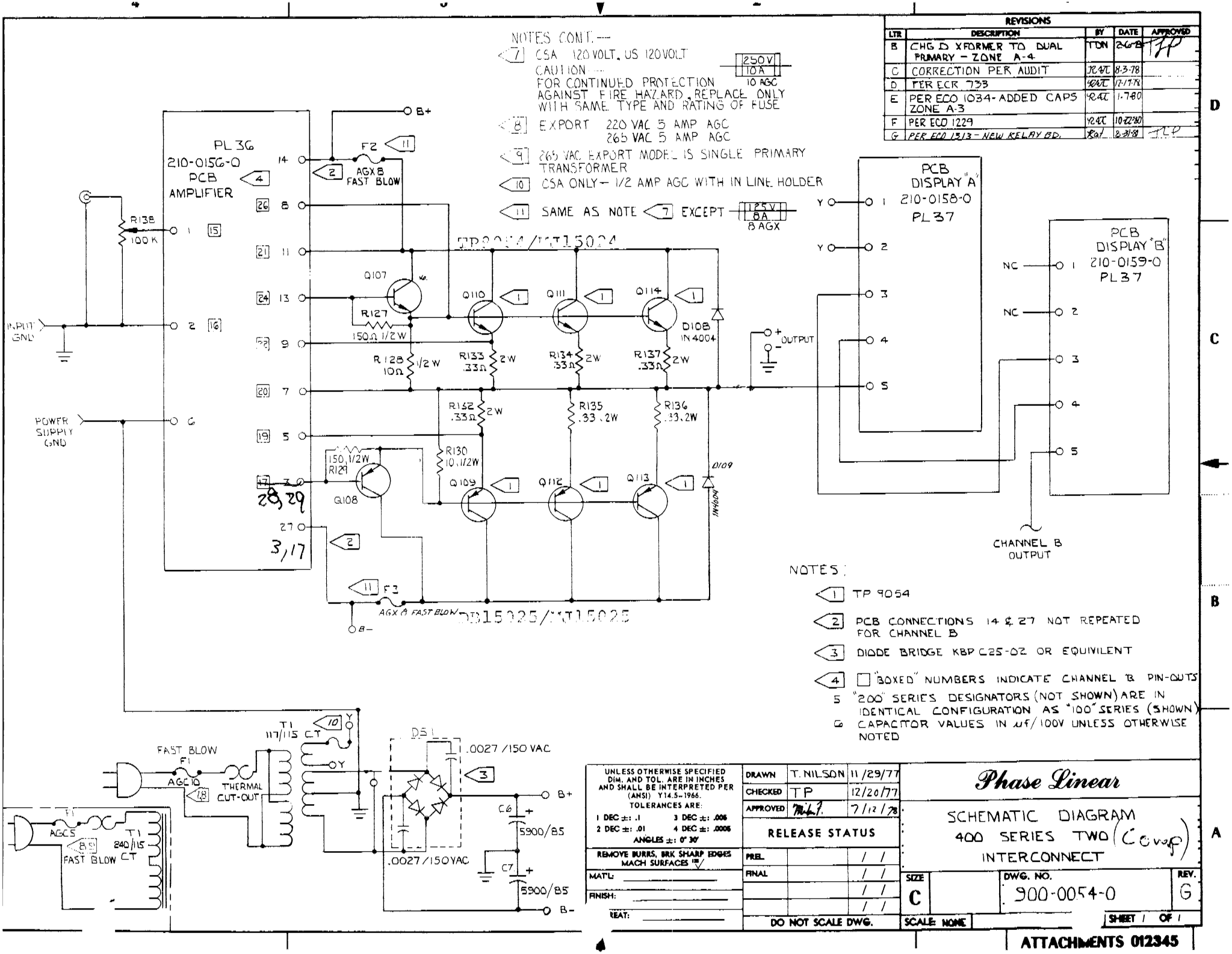

REVISIONS
LTR | DESCRIPTION | BY | DATE | APPROVED
B | CHG D XFORMER TO DUAL PRIMARY - ZONE A-4 | TDN | 2-6-8 | TLP
C | CORRECTION PER AUDIT | RAT | 8-3-78
D | PER ECR 733 | RAT | 12-17-78
E | PER ECO 1034-ADDED CAPS ZONE A-3 | RAT | 1-7-80
F | PER ECO 1229 | RAT | 10-22-80
G | PER ECO 1313 - NEW RELAY BD. | RAT | 8-31-81 | TLP
NOTES CONT.—
7 CSA 120 VOLT, US 120 VOLT
CAUTION — FOR CONTINUED PROTECTION AGAINST FIRE HAZARD, REPLACE ONLY WITH SAME TYPE AND RATING OF FUSE
250V 10A 10 AGC
8 EXPORT 220 VAC 5 AMP AGC 265 VAC 5 AMP AGC
9 265 VAC EXPORT MODEL IS SINGLE PRIMARY TRANSFORMER
10 CSA ONLY — 1/2 AMP AGC WITH IN LINE HOLDER
11 SAME AS NOTE 7 EXCEPT 125V 8A 8 AGX
PL 36
210-0156-0
PCB AMPLIFIER
R138 100 K
INPUT GND
POWER SUPPLY GND
F2 AGX 8 FAST BLOW
B+
Q107
R127 150Ω 1/2W
R128 10Ω 1/2W
Q110
Q111
Q114
R133 .33Ω 2W
R134 .33Ω 2W
R137 .33Ω 2W
D108 IN4004
R132 .33Ω 2W
R135 .33Ω 2W
R136 .33Ω 2W
R130 10Ω 1/2W
R129 150 1/2W
Q108
Q109
Q112
Q113
D109 IN4004
F3 AGX 8 FAST BLOW
B-
OUTPUT
PCB DISPLAY "A" 210-0158-0 PL 37
PCB DISPLAY "B" 210-0159-0 PL 37
NC
CHANNEL B OUTPUT
NOTES:
1 TP 9054
2 PCB CONNECTIONS 14 & 27 NOT REPEATED FOR CHANNEL B
3 DIODE BRIDGE KBP C25-02 OR EQUIVILENT
4 "BOXED" NUMBERS INDICATE CHANNEL B PIN-OUTS
5 "200" SERIES DESIGNATORS (NOT SHOWN) ARE IN IDENTICAL CONFIGURATION AS "100" SERIES (SHOWN)
6 CAPACITOR VALUES IN µf/100V UNLESS OTHERWISE NOTED
FAST BLOW F1 AGC 10
THERMAL CUT-OUT
T1 117/115 CT
DS1
.0027/150 VAC
C6 5900/85
C7 5900/85
AGC 5
T1 240/115 CT
FAST BLOW
UNLESS OTHERWISE SPECIFIED DIM. AND TOL. ARE IN INCHES AND SHALL BE INTERPRETED PER (ANSI) Y14.5-1966.
TOLERANCES ARE:
1 DEC ±: .1 3 DEC ±: .005
2 DEC ±: .01 4 DEC ±: .0005
ANGLES ±: 0° 30'
REMOVE BURRS, BRK SHARP EDGES MACH SURFACES
MAT'L:
FINISH:
REAT:
DRAWN T. NILSON 11/29/77
CHECKED TP 12/20/77
APPROVED 7/12/78
RELEASE STATUS
PREL. / /
FINAL / /
DO NOT SCALE DWG.
Phase Linear
SCHEMATIC DIAGRAM
400 SERIES TWO (Comp)
INTERCONNECT
SIZE C
DWG. NO. 900-0054-0
REV. G
SCALE: NONE
SHEET 1 OF 1
ATTACHMENTS 012345

*Phase Linear Corporation*
20121-48 Avenue West
Lynnwood, Washington 98036 USA
206 774-3571 TWX 9104492851

SERVICE BULLETIN 10-81

VERY IMPORTANT!

Subject: No more XPL909 or FPL909 output transistors.

Delco XPL909 and Fairchild FPL 909 transistors have both been discontinued by their respective manufacturers and our in-house stock is depleted. Since these devices will no longer be available it will be necessary to replace all of the 909 transistors in one channel of an amplifier in order to adhere to our "no mixed output transistor" policy should one or more become defective.

We are now recommending the NEC brand 2SD555 as a replacement for both pre-Series II(Series I) and Series II amplifiers and the Motorola TP9054/MJ15024 as a replacement for Series II amplifiers only. Be sure to thoroughly test the amplifier on a distortion analyzer while checking for possible high frequency waveform oscillations on either or both halves of the output sine wave. These low level-high frequency oscillations , if present, can usually be remedied by soldering a 10-33pf/100V cap on pre-SeriesII or a 150-270pf/100V cap on the Series II amplifiers across the base to collector junction of the respective pre-driver transistors (40327-pos., MM4003-neg.) and re-testing.

NOTE: IT IS VERY IMPORTANT THAT ALL OUTPUT TRANSISTORS USED IN PHASE LINEAR AMPLIFIERS BE THE SAME MAKE AND DEVICE NUMBER IN ONE CHANNEL. MIXING OUTPUT TRANSISTORS IN THE SAME CHANNEL WILL ADVERSELY AFFECT RELIABILITY, DISTORTION AND/OR THERMAL STABILITY.