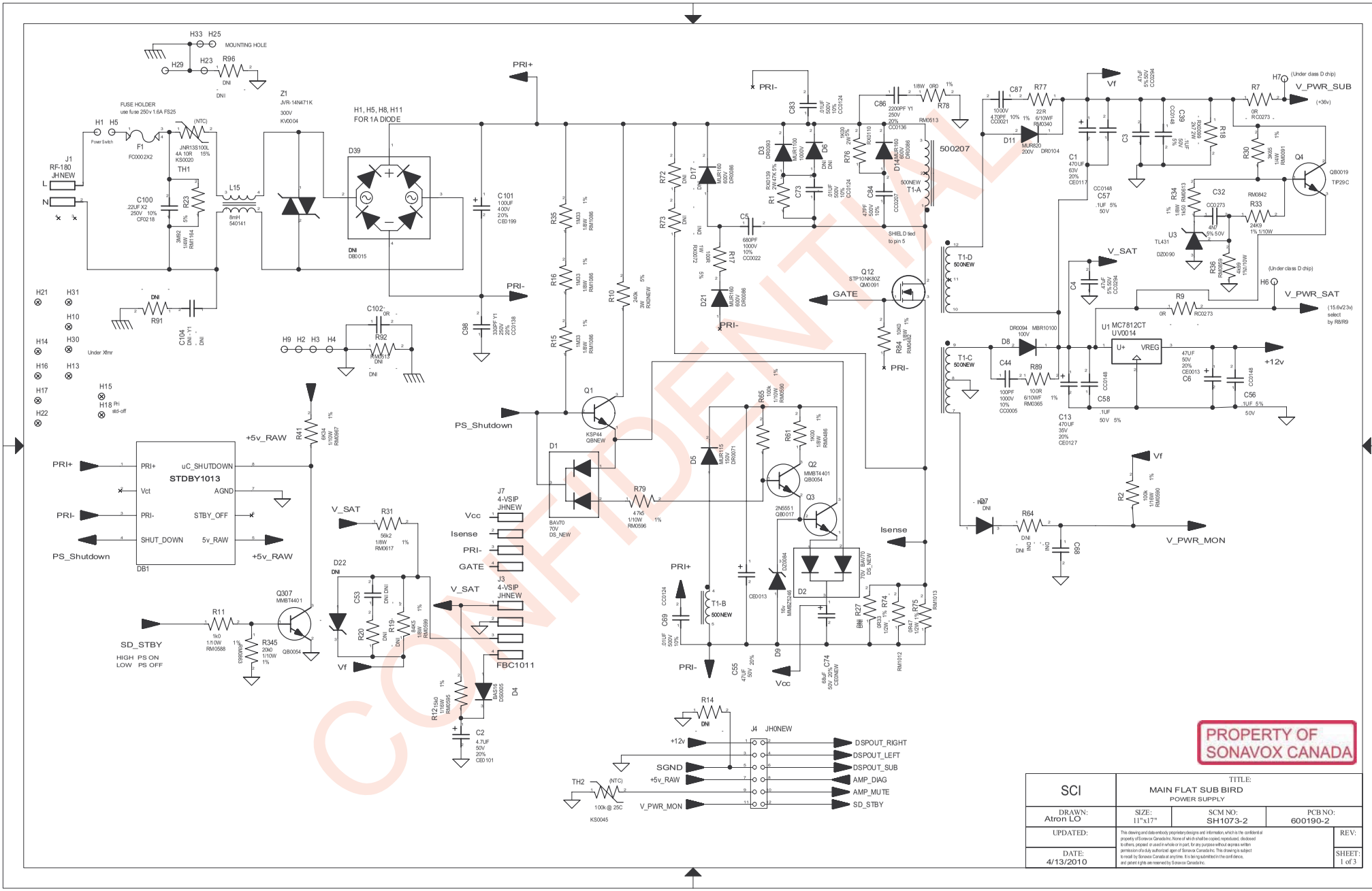

CONFIDENTIAL

PROPERTY OF
SONAVOX CANADA

SCI	TITLE: MAIN FLAT SUB BIRD POWER SUPPLY		
DRAWN: Atron LO	SIZE: 11"x17"	SCM NO: SH1073-2	PCB NO: 600190-2
UPDATED:	This drawing and data embody proprietary designs and information, which is the confidential property of Sonavox Canada Inc. None of which shall be copied, reproduced, disclosed to others, proposed or used in whole or in part, for any purpose without express written permission of a duly authorized agent of Sonavox Canada Inc. This drawing is subject to recall by Sonavox Canada at anytime. It is being submitted in the confidence, and patent rights are reserved by Sonavox Canada Inc.		REV:
DATE: 4/13/2010			SHEET: 1 of 3

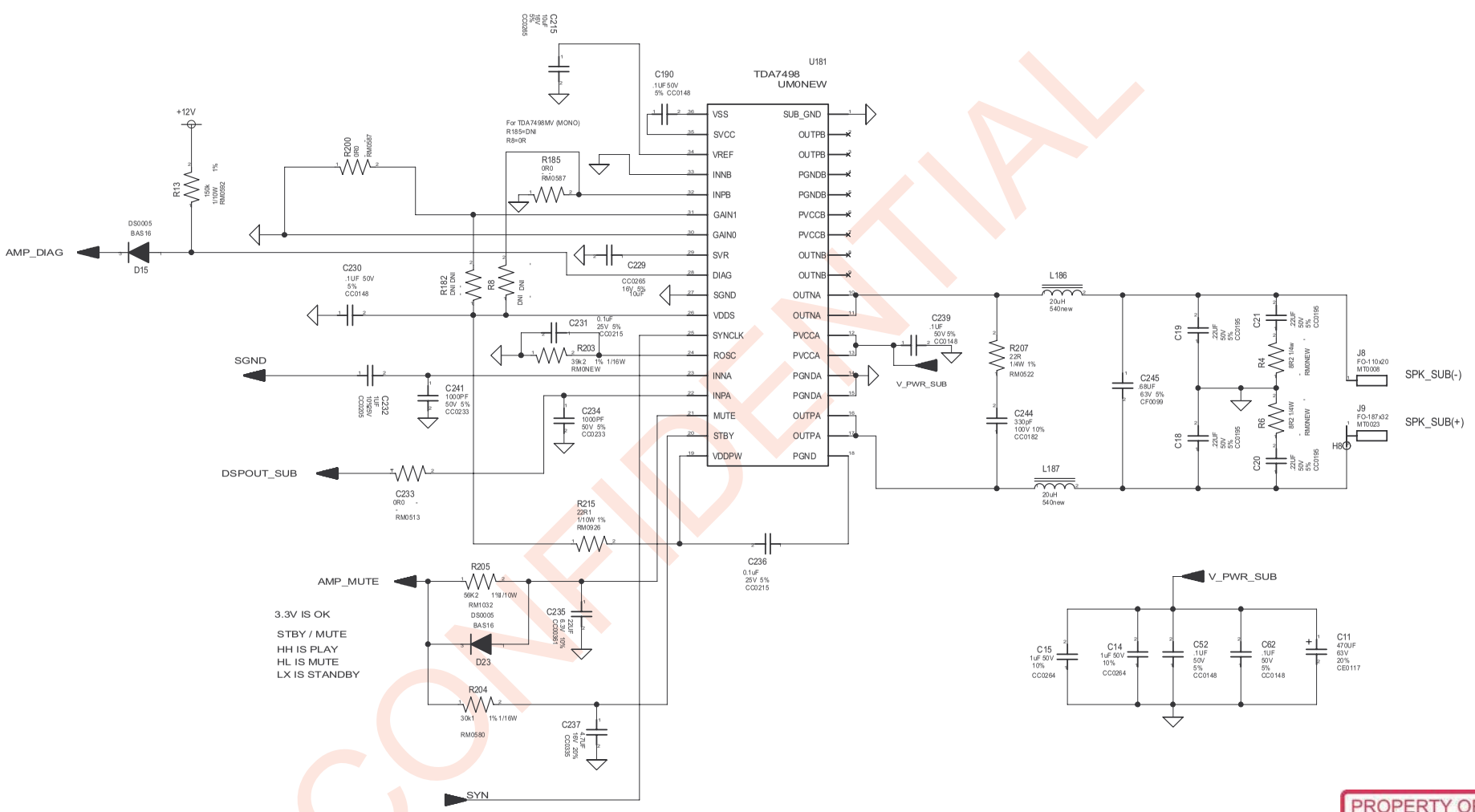

CONFIDENTIAL

PROPERTY OF
SONAVOX CANADA

	TITLE: MAIN FLAT SUB BIRD CLASS D SUB 80w 6R		
DRAWN: Atron LO	SIZE: 11"x17"	SCM NO: SH1073-2	PCB NO: 600190-2
UPDATED:	This drawing and data embody proprietary designs and information, which is the confidential property of Sonavox Canada Inc. None of which shall be copied, reproduced, disclosed to others, prepared or used in whole or in part, for any purpose without express written permission of a duly authorized agent of Sonavox Canada Inc. This drawing is subject to recall by Sonavox Canada at any time. It is being submitted in the confidence, and patent rights are reserved by Sonavox Canada Inc.		REV:
DATE: 4/13/2010			SHEET: 2 of 3

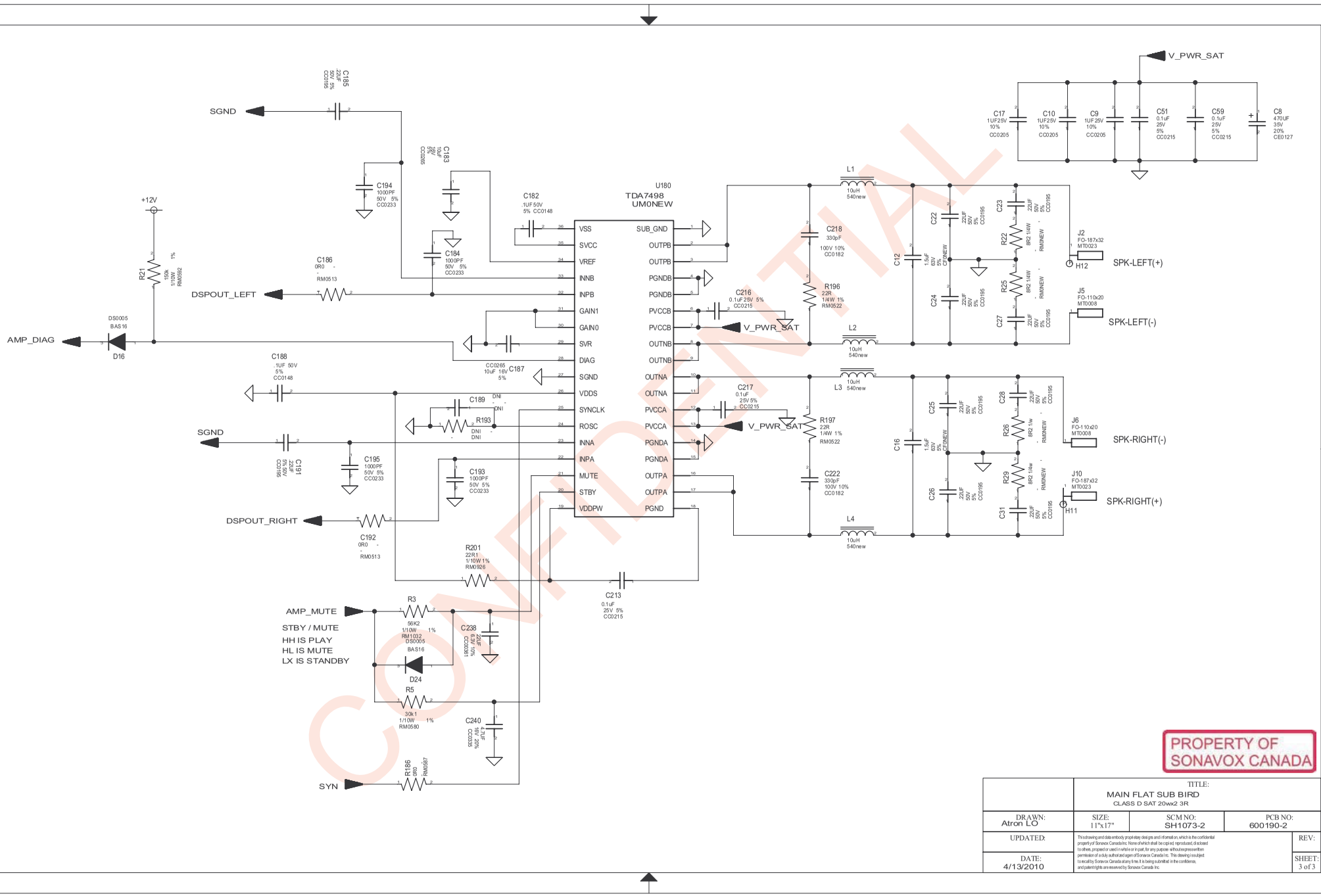

CONFIDENTIAL

PROPERTY OF SONAVOX CANADA

	TITLE: MAIN FLAT SUB BIRD CLASS D SAT 20wx2 3R		
DRAWN: Atron LO	SIZE: 11"x17"	SCM NO: SH1073-2	PCB NO: 600190-2
UPDATED:	This drawing and data embody proprietary designs and information, which is the confidential property of Sonavox Canada Inc. None of which shall be copied, reproduced, disclosed to others, prepared or used in whole or in part, for any purpose, without express written permission of a duly authorized agent of Sonavox Canada Inc. This drawing is subject to recall by Sonavox Canada at any time. It is being submitted in the confidence, and patent rights are reserved by Sonavox Canada Inc.		REV:
DATE: 4/13/2010			SHEET: 3 of 3