II. 9. The PC module :

The PC module is installed at the back of the desk, it communicates with the Audio rack thru its Parallel port and with the Desk (the Sensplit master) through its Serial port. It is equipped of MIDI connections (IN, OUT and Thru).

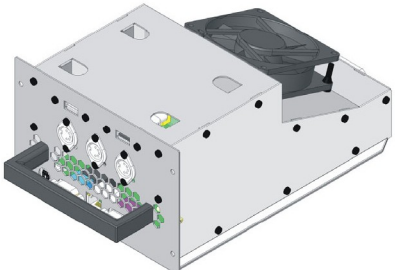

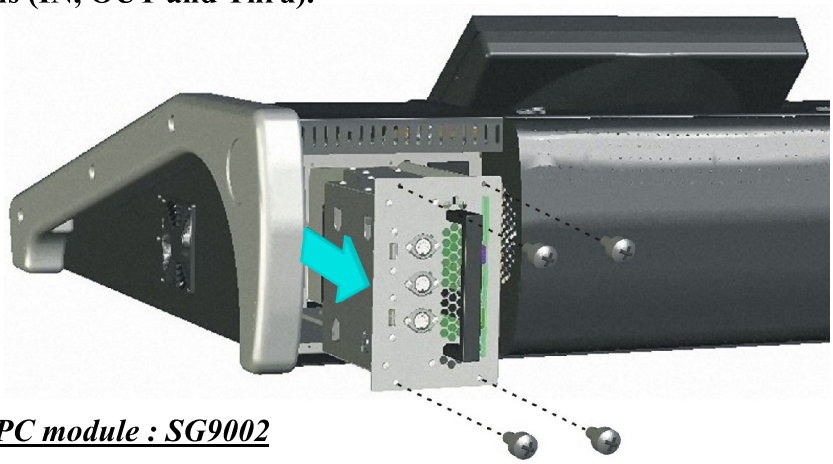

To remove the PC module : SG9002

1. **-Disconnect the SVGA cable**
2. **-Disconnect the unique Keyboard / mouse cable**
3. **-Remove the 4 screws, and extract the PC module**

Disassembly of the PC module

A- FAN 8412 NGL
B- M9048D/ mechanical
C- MIDI Board on PC104 slot
D- M9050D/ mechanical
E- M9051D/ mechanical
F- PCISA-C800ER Mother board
G- M9049D/ mechanical

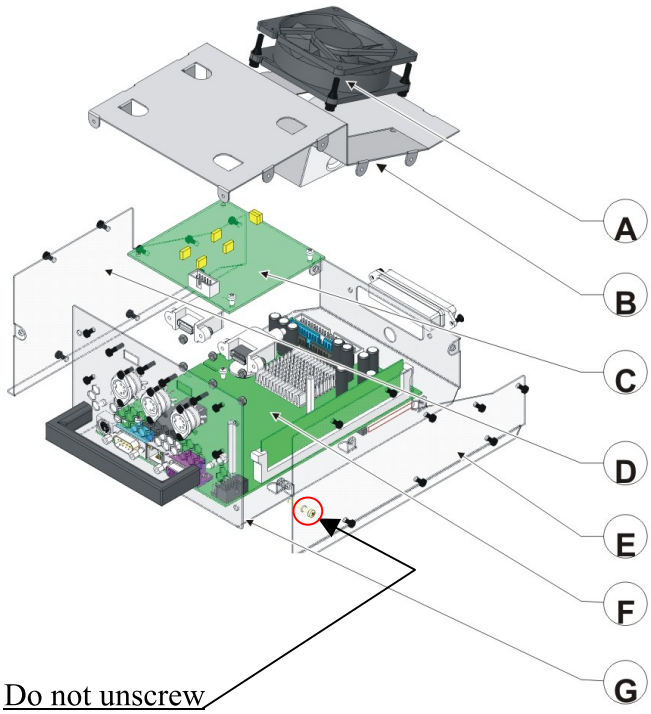

The technical files are confidential and the property of InnovaSON S.A.
Any copy, distribution or use needs our agreement – Please contact our technical support service.

The Sy48's computer is equipped with a Compact Flash memory 256Mo.

All the system, file and page are memorized on it.

The Compact flash is locked with hot glue in his connector under the Pc's mother board

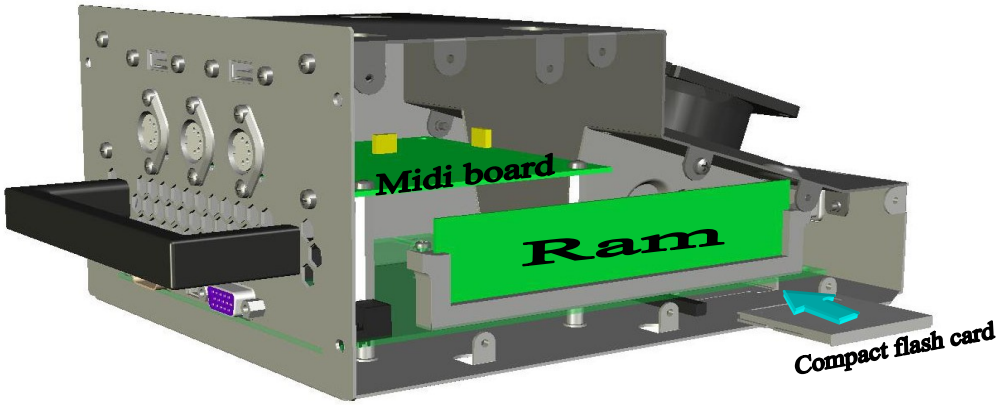

The PC board in details :

The following drawing shows the main configurations of the jumpers and exchangeable parts of the mother board PCISA-C800EVR.

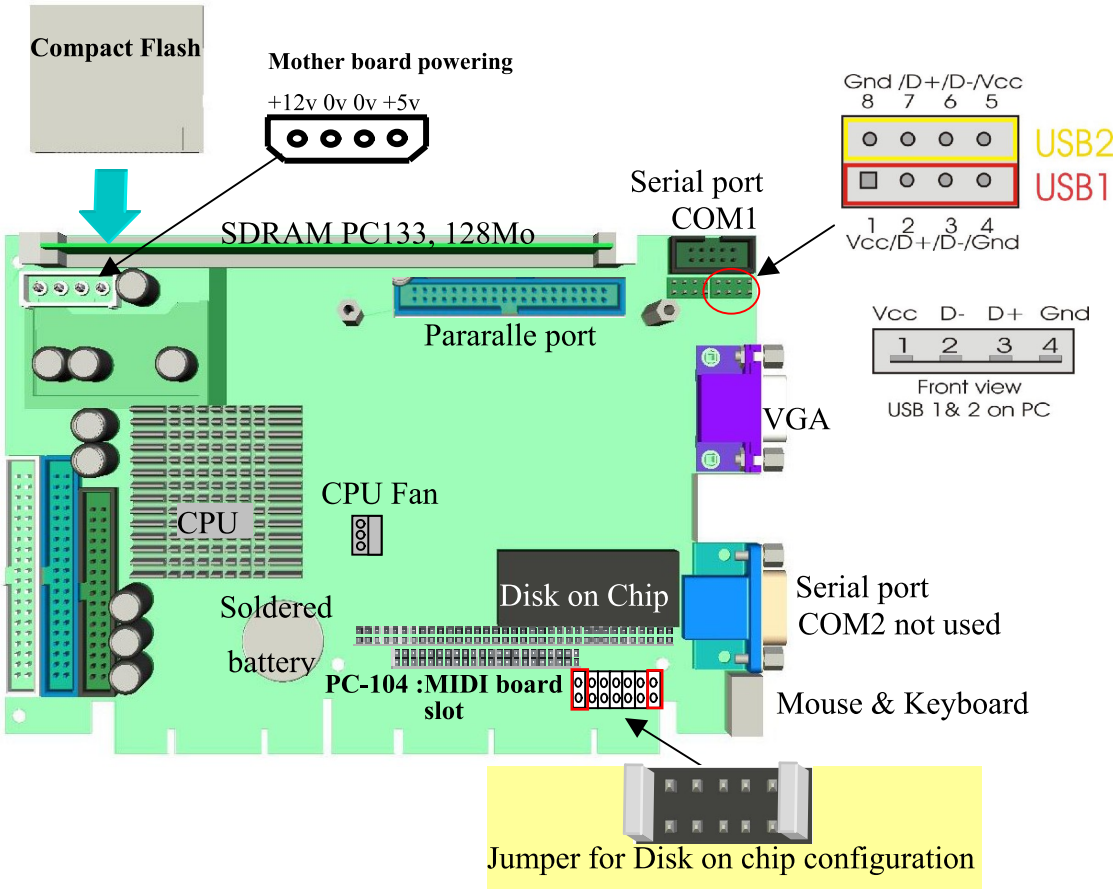

▶ *Find the complete schematic of the PC cabling Page 52*

▶ *see Page 54 for complete BIOS setup*

The technical files are confidential and the property of InnovaSON S.A.

Any copy, distribution or use needs our agreement – Please contact our technical support service.

The MIDI board in details :*SF2038*

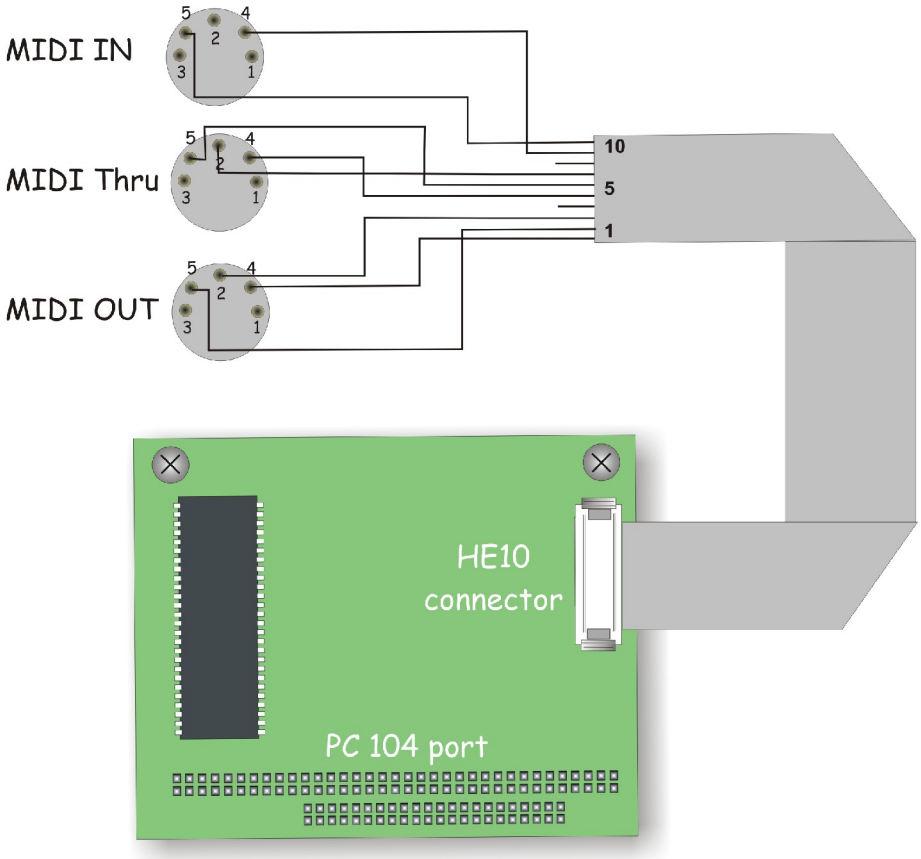

The PC's powering

The Internal PSU provide all the necessary voltages (+12v&+5v) to the PCISA-800EVR mother board.

Computer's DC cables localization

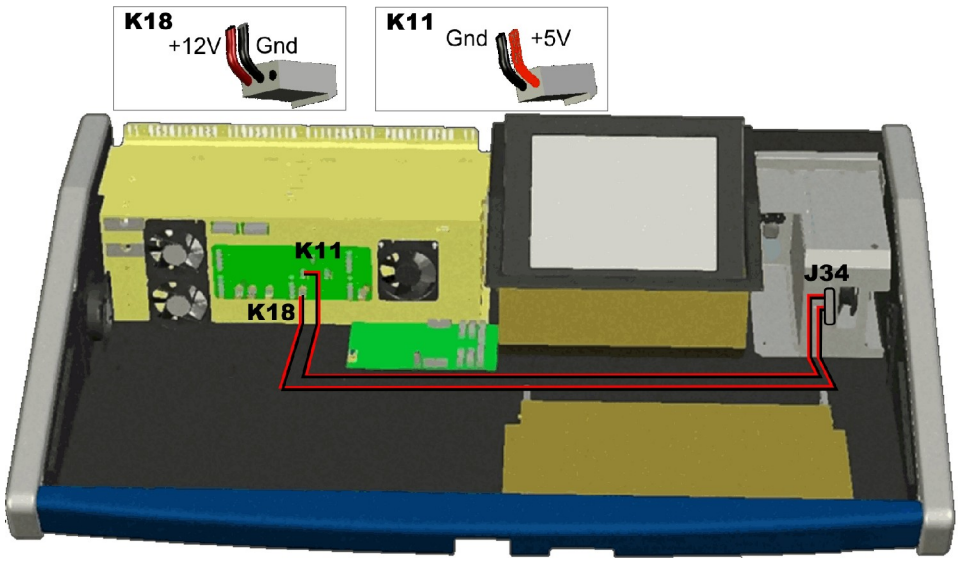

Find the complete schematic of the PC cabling Page 44

The technical files are confidential and the property of InnovaSON S.A.
Any copy, distribution or use needs our agreement – Please contact our technical support service.

The front LED of the PC: IN005A

The front LED module is a little card installed directly on the Utilities module. It allows to have permanently a status of the PC's necessary voltages.

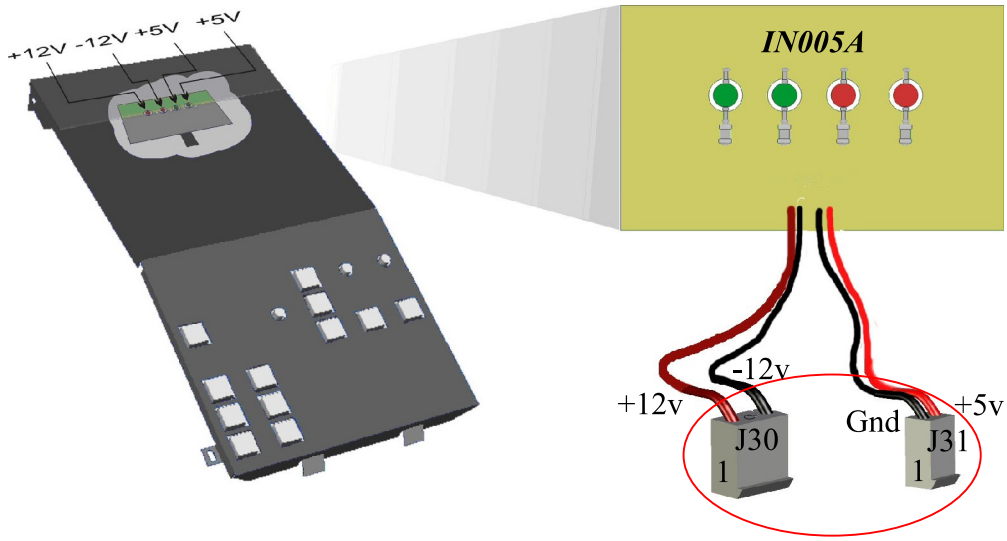

To connect to
Distribution board SF2075-Right

Find the complete electrical schematic of the connection on Page38

The technical files are confidential and the property of InnovaSON S.A.
Any copy, distribution or use needs our agreement – Please contact our technical support service.