All manuals and user guides at all-guides.com

Operating Manual

OPTIMOD-FM®

Audio Processor

Model 8101B

orban®

all-guides.com

All manuals and user guides at all-guides.com

IMPORTANT NOTE: The name of your OPTIMOD-FM and references to it in this manual may not match. Refer to the unit's rear panel for your Model #.

Model #:	Manual References	Description:
8100A	8100A	OPTIMOD-FM w/stereo coder
8100A1/U75	8100A	OPTIMOD-FM w/stereo coder, 115V 75µs
8100A1/U75F	8100A + ACC-022	OPTIMOD-FM w/stereo coder, 115V 75µs w/ FM Filter Card
8100A1/J50	8100A + MVM-021 + OPT-011	OPTIMOD-FM w/stereo coder, 100V 50µs
8100A1/J50F	8100A + MVM-021 + OPT-011 + ACC-022	OPTIMOD-FM w/stereo coder, 100V 50µs w/ FM Filter Card
8100A1/E50	8100A + OPT-021 + OPT-011	OPTIMOD-FM w/stereo coder, 230V 50µs
8100A1/E50F	8100A + OPT-021 + OPT-11 + ACC-022	OPTIMOD-FM w/stereo coder, 230V 50µs w/ FM Filter Card
8100AT/U75	8100A	*OPTIMOD-FM w/stereo coder, 115V 75µs
8100AT/U75F	8100A + ACC-022	*OPTIMOD-FM w/stereo coder, 115V 75µs w/ FM Filter Card
8100AT/J50	8100A + MVM-021 + OPT-011	*OPTIMOD-FM w/stereo coder, 100V 50µs
8100AT/J50F	8100A + MVM-021 + OPT-011 + ACC-022	*OPTIMOD-FM w/stereo coder, 100V 50µs w/ FM Filter Card
8100AT/E50	8100A + OPT-021 + OPT-011	*OPTIMOD-FM w/stereo coder, 230V 50µs
8100AT/E50F	8100A + OPT-021 + OPT-011 + ACC-022	*OPTIMOD-FM w/stereo coder, 230V 50µs w/ FM Filter Card
8101B/U75	8101B	OPTIMOD-FM w/L-R outputs, 115V 75µs
8101B/J50	8101B + MVM-021 + OPT-021 + OPT-18	OPTIMOD-FM w/L-R outputs, 100V 50µs
8101B/E50	8101B + OPT-18	OPTIMOD-FM w/L-R outputs, 230V 50µs
8100AST/U	8100A/ST	OPTIMOD-FM Studio Chassis, 115V
8100AST/J	8100A/ST + MVM-021	OPTIMOD-FM Studio Chassis, 100V
8100AST/E	8100A/ST + OPT-021	OPTIMOD-FM Studio Chassis, 230V

*Supplied with 3 and 4 TX cards and less the 3, 4 and 5 cards.

OPTIONS:

Model #:	Manual References	Description:
8100AFC	ACC-022	FM Filter Card Retrofit Kit
CIT25	ACC-025	Composite Isolation Transformer
RET027		Retrofit Kit for earlier 8100A to accept XT2
RET039		Conversion Kit for XT to XT2
ATE3F		Harris TE-1 or TE-3 Interface Kit
RCA1		Shorting Connector for RCA/Mosely BTE-15 Exciter
SC2	ACC-012	OPTIMOD Security Cover (CLEAR, BLUE, WHITE)
SC4	ACC-014	XT2 or ST Security Cover (CLEAR, BLUE, WHITE)

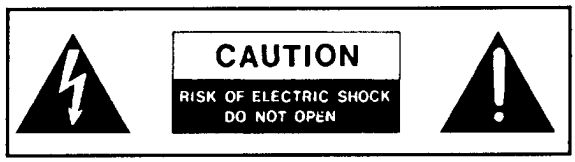

CAUTION: TO REDUCE THE RISK OF ELECTRICAL SHOCK, DO NOT REMOVE COVER (OR BACK). NO USER SERVICEABLE PARTS INSIDE. REFER SERVICING TO QUALIFIED SERVICE PERSONNEL.

WARNING: TO REDUCE THE RISK OF FIRE OR ELECTRICAL SHOCK, DO NOT EXPOSE THIS APPLIANCE TO RAIN OR MOISTURE.



This symbol, wherever it appears, alerts you to the presence of uninsulated dangerous voltage inside the enclosure — voltage that may be sufficient to constitute a risk of shock.



This symbol, wherever it appears, alerts you to important operating and maintenance instructions in the accompanying literature. Read the manual.

All manuals and user guides at all-guides.com

Operating Manual

OPTIMOD-FM®

Audio Processor

Model 8101B

orban®

All manuals and user guides at all-guides.com

The 8101B OPTIMOD-FM Audio Processor is protected by U.S. patents 4,249,042; 4,208,548; 4,460,871; and U.K. patent 2,001,495.
Other patents pending.

OPTIMOD, FCS Overshoot Compensator and Hilbert Transform Clipper are trademarks of AKG Acoustics, Inc.
Orban is a registered trademark of AKG Acoustics, Inc.

This Orban product has been manufactured by AKG Acoustics, Inc.

This manual is part number 95061-000-03
75 - FB - 11/91

© Copyright 1991 by AKG Acoustics, Inc.

orban
a division of AKG Acoustics, Inc.

1525 Alvarado Street, San Leandro, CA 94577 USA
Telephone (1) 510/351-3500
Fax (1) 510/351-0500 Telex 17-1480

All manuals and user guides at all-guides.com

Operating Manual

OPTIMOD-FM

Audio Processor

Model 8101B

page contents

1-1 **Section 1: Introduction**
- Orban's 8101B OPTIMOD-FM Audio Processor
- Optimal Control of Peak Modulation Levels
- Location, STLs, Security, Accessories
- Registration, Warranty, Feedback

2-1 **Section 2: Installation**
- Installation and Set-up

3-1 **Section 3: Operation**
- Controls and Meters
- Recommended Control Settings
- More About Audio Processing

4-1 **Section 4: Maintenance**
- Routine Maintenance
- Getting Inside the Chassis
- Performance Evaluation, Alignment

5-1 **Section 5: Troubleshooting**
- Problems and Possible Causes
- Technical Support, Factory Service

6-1 **Section 6: Technical Data**
- Specifications
- Circuit Description
- Parts List, Schematics, Assembly Drawings
- Abbreviations

INDEX on next page

All manuals and user guides at all-guides.com

Index

8100A/1 OPTIMOD-FM 1-3,6,8,9
8101A OPTIMOD-FM 1-3, 2-11,12

abbreviations 6-62
assembly drawings 6-41
audio
  input 2-15, 6-2
  output 2-11,12, 6-2
  processing 3-7

bass
  balance 3-9, 5-8
  clipper 6-9
  coupling 3-9, 6-12
buzz 5-4,7

cable 2-12,15
Cards #0/1, bypass 5-5
Cards #3TX/4TX 2-8
circuit cards
  access to 4-4
  swapping 5-5
cleaning 4-3
clipping 3-7,9,10, 6-11,20
components
  replacing 5-13
  numbering 6-5
compression 3-7,9, 6-9,11
controls 3-2,4
customer service 5-14

de-emphasis 1-6, 6-8,24
density 3-7
disassembly 4-4
distortion 3-9,10 4-14, 5-3,9,10, 6-2
  sibilance 5-9,11
dual chassis 1-5,8

equalization 3-10

factory service 5-14
frequency response 4-13, 6-2
front panel 1-2, 3-2, 4-5
fuse 2-5, 6-2

gain reduction 3-7
  meter 3-8, 4-2, 6-12
gating 3-8, 5-11, 6-11
grittiness 5-9
grounding 2-5,10,12, 4-3, 5-7
group delay 1-6, 2-21

high-frequency limiter 3-9, 6-3,16
high-frequency response 5-8
high-pass filter, 30Hz 2-8, 6-7
Hilbert Transform Clipper 2-17, 6-4,17,18
hum 5-4,7
humidity 2-10, 6-3

input
  amplifier 6-7
  attenuation 2-7,15, 6-7
  filter board 4-7
  impedance 2-15
  level 2-15
  sensitivity 2-7,15

jumpers 2-7
  Cards #3/4 2-6
  Card #5 2-18
  Card #6 2-19
  Card #7 2-6
  Cards #8/9 2-19

keys 1-10

land lines 1-7
level, standard 4-2
lightning 2-10
limiting 3-7
  HF 3-9, 6-3,16
  six-band 1-5
line voltage 2-5
location 1-8
loudness 1-5, 3-6,7,8,9,10

maintenance, routine 4-2
meters 3-2,8, 4-2
  gain reduction 3-8, 4-2, 6-12
  PPM 2-21, 3-8
  red zone 3-8
  remote G/R 2-22,23
  VU 2-7, 3-8, 4-2, 5-4
modulation
  level 1-6, 2-21
  problems 5-7
monitor system 3-6,

noise 4-14, 6-2
  pumping 3-8

opamps 5-13
OPT-022 4-11, 6-25,59
ordering parts 6-27
output
  amplifier 6-24
  impedance 2-11,12
  level 2-13,14, 4-11
  transformer 2-11,12
  pre-emphasized 2-8
  sum and difference 2-4
  unbalanced 2-11,12
overloads 3-9
overshoot compensation 6-4,23

packing for shipment 5-14
packing list 2-4
parts list 6-27
PCM 1-7
peak
  control 2-21, 3-10
  levels 1-6,8,9
  limiting 6-17
  -to-average ratio 1-6
phase scrambler 6-8
phase shift, non-linear 1-6
power 2-5, 6-2
  cord plug 2-5,6
  problems 5-4
  supplies 6-25
  transistors 4-9
pre-emphasis 1-6, 2-8, 3-9, 6-8,15
product features 1-3

rear panel 1-2, 4-6
recommended settings 2-20, 3-4
registration card 1-11
release time 3-7,8,9, 6-11
remote control 2-22
remote G/R meter 2-22,23
return authorization 5-14
RFI 2-5,12,15, 4-4, 6-7
  filter 2-5
  shielding box 4-7

safety clipper 6-23
schematics 6-41
screws 4-4
security 1-10
service 5-14
shielding 2-12,15
shipping 2-4, 5-14
side panel 4-8
signal-to-noise ratio 1-5,6
sine wave tests 6-18
source
  impedance 2-11,12
  material 3-11, 5-3
  quality 3-11
specifications 6-2
spectral balance 3-9
split chassis 1-5,8,9
stereo coder 2-12
STEREO GENERATOR switch 2-7
STL 1-5,6, 2-8,11,16
  level matching 2-16
Studio Chassis 1-5,9, 2-8,9,11,16,20
subpanel 2-10, 4-5

technical support 5-14
telephone/post lines 2-11, 4-11
temperature 2-10, 6-3
trade-offs 3-6
troubleshooting 5-1

user feedback 1-11

VCAs 6-10
VU meter 2-7, 3-8, 4-2, 5-4

warranty 1-11
whistle, on-air 5-6

all-guides.com

All manuals and user guides at all-guides.com

OPTIMOD-AM OPERATION AND MAINTENANCE MANUAL

TABLE OF CONTENTS

SYSTEM DESCRIPTION 1

INSTALLATION 2

SETUP AND ADJUSTMENTS 3

MAINTENANCE 4

PRINCIPLES OF OPERATION 5

CIRCUIT DESCRIPTION 6

Appendix I: ALIGNMENT PROCEDURE A

Appendix II: REFERENCE FILTER RESPONSES B

Appendix III: SCHEMATIC DIAGRAMS, ASSEMBLY DRAWINGS AND PARTS LISTS C

All manuals and user guides at all-guides.com

Section 1 Introduction

page contents

1-3 The 8101B OPTIMOD-FM Audio Processor
1-2 Fig. 1-1: Front and Rear Panels
1-4 Fig. 1-2: Typical OPTIMOD-FM System Configurations

1-5 Optional Accessories

1-6 Optimal Control of Peak Modulation Levels
1-6 Transmission from Studio to Transmitter
1-8 Location of OPTIMOD-FM

1-10 Security

1-11 Registration, Warranty, Feedback

All manuals and user guides at all-guides.com



Fig. 1-1: Front and Rear Panels

All manuals and user guides at all-guides.com

Orban's 8101B OPTIMOD-FM Audio Processor

OPTIMOD-FM is an integrated signal-processing system that replaces conventional compressors, limiters, and clippers. Each part of the OPTIMOD-FM system has been precisely engineered to be compatible with all other parts to ensure optimal performance. The 8101B is a basic OPTIMOD-FM Audio Processor, without a stereo coder (stereo generator). Various OPTIMOD-FM accessories (see page 1-5) can provide processing enhancements or additional operational convenience.

The 8101B OPTIMOD-FM Audio Processor:

- **Rides gain** over a range of as much as 25dB, compressing dynamic range and compensating for gain riding errors on the part of operators. The amount of dynamic range reduction ordinarily produced is adjustable.
- **Makes gain riding and compression virtually undetectable** (if operated at optimal release time setting) by use of advanced, program-controlled time-constants and multiband compression.
- **Prevents aliasing distortion** by providing bandwidth-limiting 15kHz low-pass filters ahead of the stereo coder. Since full overshoot compensation is provided for these filters, OPTIMOD-FM provides extremely tight peak control.
- **Makes audio quality more consistent** by correcting the balance between bass and midrange material when OPTIMOD-FM's dual-band compressor is operated in independent mode. When the compressor bands are fully coupled ("wideband" mode), OPTIMOD-FM **preserves frequency balances** and produces an output which sounds almost exactly like its input.
- **Prevents peak overload and overmodulation** due to the effects of the FM pre-emphasis curve.

Other OPTIMOD-FM Audio Processors – The 8100A/1 and 8101A:

The widely used 8100A/1 OPTIMOD-FM has an integral stereo coder, and is therefore not appropriate for applications which require separate audio outputs for each channel. The 8101B OPTIMOD-FM was developed to meet the needs of broadcasters who require L/R output. The 8101B is identical to the 8100A/1 except that it has: 1) no stereo coder, 2) separate, buffered audio outputs for left and right channels, 3) Hilbert Transform Clipper™ peak-limiting circuitry, and 4) different front and rear panels.

The earlier 8101A OPTIMOD-FM has a source (output) impedance of 370 ohms. The 8101B was designed with a lower (< 30-ohm) output impedance to meet regulatory requirements in certain countries. Owners of 8101A would gain no audible advantage by converting that unit's output impedance (which involves replacement of Card #7 and other components). If the lower output impedance is nonetheless desired, contact Orban Customer Service (see page 5-15) for a conversation kit. (The drawings of the 8101B's Card #7 and Filter Board in this manual are not applicable to the 8101A; drawings of the 8101A's Card #7 and Filter Board are available from Orban Customer Service.)

All manuals and user guides at all-guides.com

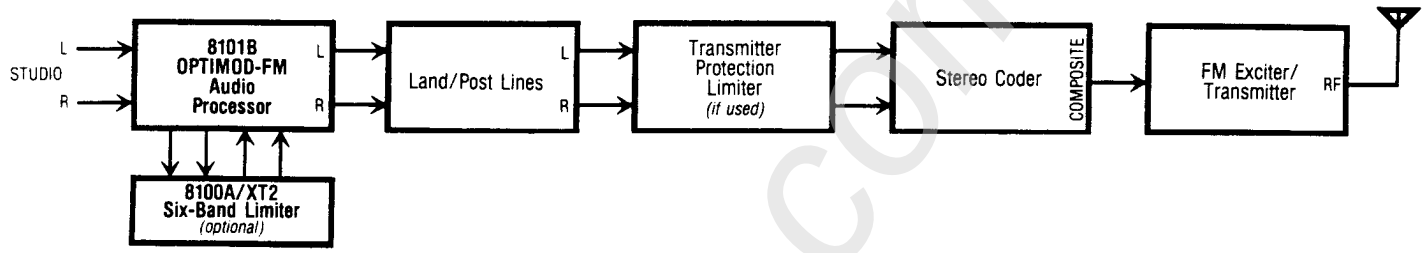

Program feed from studio to transmitter via analog or digital land lines. (8101B located at studio to comply with government restrictions.)

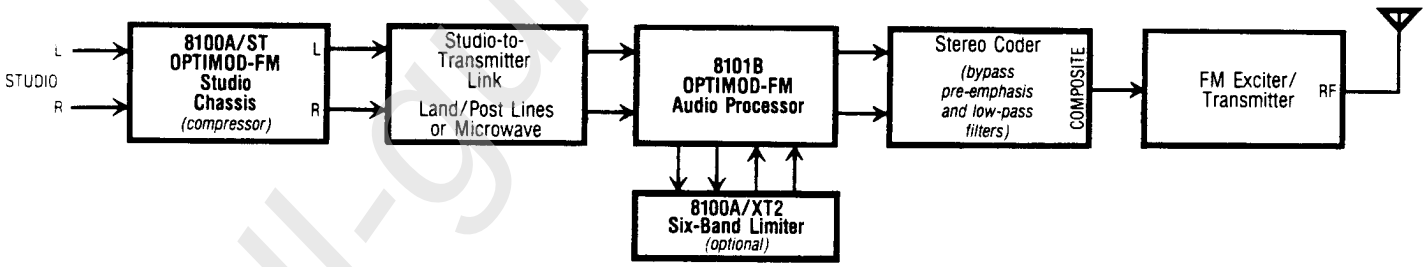

Program feed from studio to transmitter via discrete left/right analog or digital STL.

Fig. 1-2: Typical OPTIMOD-FM System Configurations

all-guides.com

All manuals and user guides at all-guides.com

Optional Accessories

8100A/XT2 Six-Band Limiter

The 8100A/XT2 OPTIMOD-FM Six-Band Limiter provides additional multiband processing for stations that desire a brighter, louder, or more processed sound than that provided by an OPTIMOD-FM used alone and in the recommended manner. The 8100A/XT2 provides the means to fine-tune your on-air sound through precise control of bass and treble sound texture, program density, and program dynamics.

The 8101B and the 8100A/XT2 combine to form an integral system. Functionally, the 8100A/XT2 adds bass equalization, presence and brilliance equalization, six-band limiting, and multiband distortion-canceling clipping to the OPTIMOD-FM to give:

- Increased loudness for a given level of audible processing side-effects.
- Improved consistency from source to source.
- Increased presence and intelligibility on smaller radios and in automobiles.
- Control of bass and high-frequency equalization.

The 8101B + 8100A/XT2 System is particularly well-suited for highly competitive pop music formats, such as Album-Oriented Rock, Contemporary Hit Radio, Adult Contemporary, and Urban Contemporary. Oldie and Beautiful formats can benefit also from the improved consistency that the 8100A/XT2's "automatic equalization" can provide. Because 8100A/XT2 has been specifically "tuned" to the 8101B, the 8101B + 8100A/XT2 System produces less processing side-effects than do complex processing systems that use OPTIMOD-FM cascaded with other processors. (If you use the 8100A/XT2 Six-Band Limiter with the 8101B, you must change certain circuit card jumpers, as indicated in Section 2 of this manual; these instructions supersede those in the 8100A/XT2 Operating Manual, which assume an 8100A/1 OPTIMOD-FM is being used.)

8100A/ST Studio Chassis

The 8100A/ST OPTIMOD-FM Studio Chassis makes it possible to locate the 8101B's compression function ahead of the studio-transmitter link (STL) for optimization of system signal-to-noise ratio when OPTIMOD-FM is installed at the transmitter. The 8100A/ST consists of a chassis shell assembly with power supply and metering circuitry. The 8101B's dual-band compressor cards are installed in this chassis, and then cards provided with the Studio Chassis are installed in the 8101B to re-establish signal continuity.

The Studio Chassis provides convenient access at the studio to all operating controls except high-frequency limiting. It provides the same gain reduction metering as the 8101B, and several diagnostic metering functions as well. The 8100A/ST Studio Chassis is fully compatible with the 8100A/XT2.

222A Stereo Spatial Enhancer

The 222A Stereo Spatial Enhancer detects and enhances psychoacoustic cues that are present in all stereo program material. It increases spatial definition, brightness, clarity, and transient definition.

All manuals and user guides at all-guides.com

Optimal Control of Peak Modulation Levels

OPTIMOD-FM audio processing precisely controls peak levels. If the result of this audio processing is fed directly into the stereo coder, peak modulation levels will be precisely controlled (provided that the coder's internal low-pass filters and pre-emphasis networks are bypassed and OPTIMOD-FM is permitted to perform those functions).

However, if the frequency response of the link between the audio processor and stereo coder is not perfectly flat, and/or there is non-linear phase shift (non-constant group delay) in the audio passband, peaks will be magnified. Peak modulation will increase, but average modulation will not. The modulation level must therefore be reduced to accommodate the larger peaks. A reduced average modulation level will result in reduced loudness and a poorer signal-to-noise ratio at the receiver.

Frequency response errors and non-constant group delay are typically introduced by land line equalizers, transformers, 15kHz low-pass filters prior to the stereo coder, and pre-emphasis networks prior to the stereo coder. There are three criteria for preservation of peak levels through the audio system:

1) The system group delay must be essentially constant throughout the frequency range containing significant energy (30–15,000Hz) — if low-pass filters are present, this may require the use of delay equalization.

2) Any pre-emphasis must be canceled by a *precisely complementary* de-emphasis — that is, every pole and zero in the pre-emphasis filter must be complemented by a zero and pole of identical complex frequency in the de-emphasis network (an all-pole de-emphasis network is not appropriate).

3) The low-frequency −3dB point of the system must be placed at 0.15Hz or lower — this is necessary to ensure less than 1% overshoot in a 50Hz square wave and essentially constant group delay to 30Hz.

It is clear that these criteria are most easily met when the audio processor directly feeds the stereo coder. This is why the standard 8100A/1 OPTIMOD-FM contains a built-in stereo coder.

Transmission from Studio to Transmitter

There are five types of studio-to-transmitter links (STLs) in common use in FM stereo service: composite baseband microwave, analog land line (telephone/post line), dual microwave, PCM (pulse-code modulation), and video STLs with PCM adapters.

Except for the composite baseband microwave STL, all these links carry the left and right channels directly or in some encoded form other than the standard 19kHz pilot-tone stereo baseband. These links are normally fed both left and right audio channels in non-encoded form, and their output is in the form of left and right channels.

All manuals and user guides at all-guides.com

Composite baseband microwave:

The composite baseband microwave STL carries the standard pilot-tone stereo baseband, and is therefore fed from the output of a stereo coder located at the studio site. The receiver output of the composite STL is the stereo baseband signal, which is applied directly to the wideband input of the FM broadcast transmitter's exciter. Thus, no stereo coder is needed at the transmitter.

In general, the highest audio quality is obtained by use of a composite microwave STL provided there is a line-of-sight transmission path from studio to transmitter of less than 10 miles (16 km). If not, RF signal-to-noise ratio, multipath distortion, and diffraction effects can cause serious quality problems.

Where a composite STL is used, the Model 8100A/1 OPTIMOD-FM (which includes an integral stereo coder) is preferred.

Analog land line (post office line):

Analog land line quality is extremely variable, ranging from excellent to poor. Whether land lines should be used depends upon the quality of the lines locally available, and upon the availability of other alternatives. Even the best land lines tend to slightly veil audio quality, due to line equalizer characteristics and phase shifts. Slight frequency response irregularities and non-constant group delay characteristics will alter the peak-to-average ratio, and will thus reduce the effectiveness of any peak limiting performed prior to their inputs (see "Optimal Control of Peak Modulation Levels" on page 1-6).

Dual microwave STLs:

Dual microwave STLs offer greater noise immunity than composite microwave STLs. However, problems include gain- and phase-matching of the left and right channels, overloads induced by pre-emphasis, and requirements that the audio applied to the microwave transmitters be processed to prevent overmodulation of the microwave system. Unless carefully designed, dual microwave STLs can also introduce non-constant group delay in the audio spectrum, thus distorting peak levels.

PCM links:

PCM links achieve good noise performance and consistency at the expense of a very sharp high-frequency cut-off, rapid changes in group delay around cut-off (unless elaborate phase equalization is used), and quantization distortion. Peak levels are therefore very likely to be distorted by a typical PCM link.

Video STLs with PCM adapters:

The video STLs in use typically operate above 20GHz, with consumer PCM adapters (from Sony or dbx, for example) to encode left and right audio into a video-like signal. The quality of signal received at the transmitter through this type of STL is high. However, the high carrier frequencies make these links subject to rain fading. Other potential problems include very sharp high-frequency cut-off, rapid changes in group delay around cut-off, and quantization distortion.

All manuals and user guides at all-guides.com

Location of OPTIMOD-FM

Because the 8101B was designed specifically for stations that do not own, control, or have access to the transmitter, it is almost always located at the studio (see Fig. 1-2). It is, however, possible to locate OPTIMOD-FM at the transmitter, or to split it into two sections located at either end of the STL.

The best location for any OPTIMOD-FM is as close as possible to the transmitter, so that OPTIMOD-FM's output can be connected to the transmitter through a circuit path that introduces the least possible change in the shape of OPTIMOD-FM's carefully peak-limited waveform. (Severe changes in the shape of the waveform can be caused by passing it through a circuit with non-constant group delay and/or non-flat frequency response in the 30–15,000Hz range.)

In the 8100A/1, the stereo coder (stereo generator) is co-resident with the processor. This situation is ideal, because no circuit elements which might distort the shape of the waveform are interposed between the audio processor and the stereo coder. The stereo coder's baseband output is then fed to the transmitter's exciter either directly through a short length of coaxial cable, or via a well-conditioned broadband STL radio link with essentially flat frequency response and constant group delay from 30Hz to 53kHz.

The 8101B has a stereo audio output and no internal stereo coder. It is an adaptation of the 8100A/1 for situations where the stereo coder and exciter are under the jurisdiction of an independent transmission authority, and where the programming agency's jurisdiction ends at the interface between the audio plant and the link connecting the audio plant to the transmitter. (The link might be post lines, analog microwave radio, or various types of digital paths.) This situation is not ideal because artifacts that cannot be controlled by the audio processor can be introduced by the link to the transmitter, by transmitter peak limiters, or by the stereo coder.

Ideally, the audio output of the 8101B should be fed directly to a stereo coder through a stereo link which is as flat and phase-linear as possible. Deviation from flatness and phase-linearity will cause spurious modulation peaks because the shape of the peak-limited waveform is changed. Such peaks add nothing to average modulation. Thus the average modulation must be lowered to accommodate those peaks within the carrier deviation limits dictated by government authorities.

A transmission line capable of carrying the encoded baseband is much less susceptible to having spurious peaks added, because a line whose bandwidth or phase-linearity is sufficiently poor to introduce spurious peaks will also severely degrade stereo separation.

If the transmitter is not accessible:

All audio processing must be done at the studio, and any damage that occurs later must be tolerated.

If it is possible to obtain a broadband phase-linear link to the transmitter, and the broadcasting authority will accept the delivery of a baseband encoded signal, use the

All manuals and user guides at all-guides.com

8100A/1 OPTIMOD-FM at the studio location to feed the STL. Then feed the output of the STL receiver directly into the exciter with *no* intervening processing.

If only an audio link is available, use the 8101B OPTIMOD-FM and feed the audio, without pre-emphasis, directly into the link. If possible, request that any transmitter protection limiters be adjusted for minimum possible action — OPTIMOD-FM does most of that work. Transmitter protection limiters should respond only to signals caused by faults or by spurious peaks introduced by imperfections in the link.

If maximum quality is desired, it is wise to request that all equipment in the signal path after the studio be carefully aligned and qualified to meet the appropriate standards for bandwidth, distortion, group delay and gain stability, and that such equipment is re-qualified at reasonable intervals. (See "Optimal Control of Peak Modulation Levels" on page 1-6).

If the transmitter is accessible:

[The following contains information of rare interest to most 8101B owners.]

Locate OPTIMOD-FM at the transmitter site. The audio received at the transmitter site should qualified to be of as good quality as possible. Because the audio processor controls peaks, it is not important that the audio link feeding OPTIMOD-FM's *input* terminals be phase-linear. However, the link should have low noise, the flattest possible frequency response from 30-15,000Hz, and low non-linear distortion.

If possible, use the 8100A/1 OPTIMOD-FM, which contains a stereo coder. Feed the output of the coder directly to the baseband input to the exciter through a short length (less than 2 meters) of coaxial cable.

If a separate coder must be used, process audio with the 8101B OPTIMOD-FM. Feed the coder directly from the 8101B's stereo outputs. If possible, bypass the pre-emphasis network and the input low-pass filters in the coder so that they cannot introduce spurious peaks. Because of their special design, OPTIMOD-FM's pre-emphasis network and low-pass filters perform the same functions while retaining tight peak control.

Use of the 8100A/ST Studio Chassis:

If the audio link between the studio and the transmitter is noisy, the audibility of this noise can be minimized by performing the compression function at the studio site. Compression applied before the audio link improves the signal-to-noise ratio because average level on the link will be greater. The 8100A/ST Studio Chassis can be used to locate OPTIMOD-FM's compression circuitry before the STL. The high-frequency and peak limiting functions remain in the main OPTIMOD-FM chassis at the transmitter to control both peaks in the program and spurious peaks introduced in the audio link between studio and transmitter.

The 8100A/ST has 600-ohm outputs, possibly making it unsuitable for presentation to post office lines under the regulations of certain countries. In such situations, drive the post lines with a buffer amplifier having suitable characteristics.

While the 8100A/ST is not a sophisticated peak limiter, its VCA's clip cleanly and are usable to protect the STL from excessive peaks. If peak limiting of the audio is required by regulation prior to its presentation to the STL, the output attenuator

All manuals and user guides at all-guides.com

controls in the 8100A/ST can be set to scale the VCA output level so that the maximum peak level permitted at the input to the STL is not exceeded (see page 2-16).

The 8100A/ST does not perform pre-emphasized peak limiting and thus will not protect a pre-emphasized STL from overloads due to pre-emphasized peaks. If the pre-emphasis is 50 or 75µs (as is the case with many dual microwave systems), the average level needs to be reduced because significant headroom must be allowed to accommodate the peaks magnified by the pre-emphasis. If possible, the STL should be modified to use 25µs pre-emphasis because 25µs pre-emphasis is more complementary to the spectral distribution of contemporary recorded material and permits higher average levels, resulting in a better signal-to-noise ratio through the STL.

Security

To restrict access to the set-up controls, the access door is fitted with a lock. Two keys are supplied. These may be duplicated as necessary. The dealer from whom your 8101B was purchased can supply additional keys, as can the factory. In either case, your Registration Card must be on file at the factory, and you must supply your serial number to obtain replacement keys. If all keys are lost, you can obtain access by removing the three hex-socket screws from the top of the main front panel with a 5/64-inch hex wrench (one is supplied with the unit).

If you wish to make the unit's adjustments more secure, obtain similar splined-socket or aircraft tri-point screws (and tools), and use these in place of the hex-socket screws supplied. (Tools for these are not readily found in hardware stores or other places errant knob-twirlers might frequent.) The screws are 6-32 × 3/8-inch 82° flathead, nickel-plated steel.

In situations where it is desirable to limit access to *all* front-panel controls, an optional acrylic security cover can be installed. Order ACC-14CL for a clear cover, ACC-14BL for a transparent blue cover, or ACC-14WH for an opaque white cover.

All manuals and user guides at all-guides.com

Registration, Warranty, Feedback

Registration Card

There are two good reasons for returning the Registration Card:

1) It enables us to inform you of new applications, performance improvements, and service aids that are developed, and
2) It helps us respond promptly to claims under warranty without having to request a copy of your bill of sale or other proof of purchase.

Please fill in the Registration Card and send it to us today. If it is lost (or you have purchased this unit used), please photocopy the duplicate below, fill it in, and send it to Orban at the address on the inside of the front cover.

We do not sell our customers' names to advertising agencies.

Registration Card

Model # _____ Serial # _____ Purchase Date _____

Your name _____ Title _____

Company _____ Telephone _____

Street _____

City, State, Mail Code (Zip), Country _____

Nature of your product application _____

How did you hear about this product? _____ Purchased from _____

Comments _____

_____

Which magazines do you find the most useful to your job?

___ Audio	___ Broadcast Engineering	___ Broadcast	___ dB Magazine
___ Electronic Musician	___ EQ	___ Millimeter	___ Mix
___ Post	___ Pro Sound News	___ Radio & Records	___ Radio World
___ RE/P	___ Sound & Communications	___ S & VC	___ TV Broadcast
___ TV Tech	___ _____	___ _____	
	___ _____	___ _____	

95101-000-07 1/91

Warranty

The warranty, which can be enjoyed only by the first end-user of record, is stated on the separate Warranty Certificate packed with this manual. Save it for future reference. See page 5-15 for information about factory service.

User Feedback Form

We are very interested in your comments about this product. Your suggestions for improvements to the product or the manual will be carefully reviewed. Use the User Feedback Form in the back of this manual — or write us at the address on the inside of the front cover. Thank you.

All manuals and user guides at all-guides.com

Notes:

All manuals and user guides at all-guides.com

Section 2
Installation

page contents

2-2 Installation — Quick Set-up

2-4 Installation — Comprehensive Instructions

2-6 Fig. 2-1: AC Power Cord Color Coding
2-6 Fig. 2-2: Jumper Positions, Cards #3 and #4
2-6 Fig. 2-3: Jumper Positions, Card #7
2-9 Fig. 2-4: Card Positions, 8100A/ST Studio Chassis
2-13 Fig. 2-5: Control Settings for Steps 12 and 13
2-18 Fig. 2-6: Jumper Positions, Card #5
2-19 Fig. 2-7: Jumper Positions, Card #6
2-19 Fig. 2-8: Jumper Positions, Cards #8 and #9
2-20 Fig. 2-9: Recommended Initial Control Settings

CAUTION

The installation and servicing instructions in this manual are for use by qualified personnel only. To avoid electric shock do not perform any servicing other than that contained in the Operating Instructions unless you are qualified to do so. Refer all servicing to qualified service personnel.

(per UL 813)

All manuals and user guides at all-guides.com

Installation — Quick Set-up

The detailed comprehensive installation instructions beginning on page 2-4 cover many special situations. If your situation is typical, you can use these quick set-up instructions. If you are using the optional 8100A/ST Studio Chassis or 8100A/XT2 Six-Band Limiter with the 8101B, use the comprehensive instructions.

Read "Location of OPTIMOD-FM" on page 1-8, and "Optional Accessories" on page 1-5 before continuing. If you want to install a remote gain reduction meter, see the box on page 2-23.

You will need an audio oscillator for set-up.

1) Change initialization options. (optional)

As shipped, the 8101B is configured with input sensitivity of −10 to +10dBu, the 30Hz high-pass filters enabled, and flat output. See step 6 on page 2-7 if you want to change any of these options.

The 8101B provides L/R output. If you require sum and difference (L+R/L−R) output, contact Orban Customer Service for retrofit instructions and parts (see page 5-15). Also contact Orban Customer Service if you wish to change pre-emphasis.

2) Mount the 8101B in a rack, connect to power and ground.

When installed at the transmitter site, OPTIMOD-FM is ordinarily located close to the transmitter's stereo coder to avoid RF intrusion.

Measure the resistance between the chassis and the rack ground to verify that it is less than 0.5 ohm.

The 8101B is shipped ready for 115 or 230V, 50/60Hz operation. Refer to the unit's rear panel for your Model # and the inside front cover of the manual for your Model #'s line voltage setting. To change the operating voltage or the power cord plug, see step 2 on page 2-5.

3) Set the rear-panel STEREO GENERATOR switch to OUT.

[Skip this step if there is no STEREO GENERATOR *switch on the rear panel.]*

The STEREO GENERATOR switch has no function on the 8101B (this rear panel is also used on other products) — but it *must* be set to OUT for the 8101B to operate properly.

All manuals and user guides at all-guides.com

4) Connect 8101B's audio outputs to the stereo coder or program lines.

See step 11 on page 2-12 for information about audio connections, impedances, shielding, and grounds.

5) Adjust output level using tone.

See step 12 or 13 on page 2-13 or 2-14.

6) Connect program lines to the 8101B's audio inputs.

See step 14 on page 2-15.

7) Set controls, match levels with program material.

See step 17 on page 2-20.

8) Verify modulation levels with program material.

See step 18 on page 2-21.

9) Complete and return the Registration Card.

The Registration Card enables us to inform you of new applications, performance improvements, and service aids which may be developed, and it helps us respond promptly to claims under warranty without having to request a copy of your bill of sale or other proof of purchase. Please fill in the Registration Card and send it to us today. (If it is lost, a duplicate is on page 1-11.)

We do not sell our customers' names to advertising agencies.

Installation is now complete. Read Section 3 for information about setting the controls for your format and aesthetic requirements.

All manuals and user guides at all-guides.com

Installation — Comprehensive Instructions

Allow about one hour for installation. You will need an audio oscillator for set-up.

Installation begins with a check-out of the 8101B and optional setting of initialization jumpers. If the optional 8100A/ST Studio Chassis is used, circuit cards are transferred to that unit. The 8101B is mounted in a rack, grounded, and powered. Audio output lines are connected and the output level is adjusted. Then audio input lines are connected (and STL levels matched if the 8100A/ST is used). If the optional 8100A/XT2 Six-Band Limiter will be installed, circuit cards are removed from the 8101B, and jumpers on the remaining cards are moved. Finally, controls are set and proper operation is confirmed.

The 8101B provides L/R output. If you require sum and difference (L+R/L–R) output, contact Orban Customer Service for retrofit instructions and parts (see page 5-15). If you want to install a remote gain reduction meter, see the box on page 2-23.

Read "Location of OPTIMOD-FM" on page 1-8, and "Optional Accessories" on page 1-5 before continuing.

1) Unpack and inspect.

A❑ If obvious physical damage is noted, contact the carrier immediately to make a damage claim.

B❑ Make a mental note of how the unit is packed and *save all packing materials.*

If you ever have to ship the 8101B (e.g., for servicing), it is best to ship it in the original packing materials since these have been carefully designed to protect the unit.

Packed with the 8101B are:

1	Power cord
1	3-wire power cord plug adapter
4	10-32 x 3/4-inch rack mounting screws
1	5/64-inch hex wrench for front panel screws
2	Keys for access door
1	Adjustment tool (mounted inside front-panel door)
1	Knob wrench
1	Extender card (shipped inside the card rack)
1	1/4-amp 3AG Slo-Blo® fuse (for 230V)
2	620-ohm ±5%, 1/2-watt, carbon film resistors
4	280-ohm ±1%, 1/8-watt, metal film resistors
1	Final Factory Qualification Test Results
1	Warranty Certificate
1	Registration Card
1	Operating Manual
1	Booklet — *Audio Quality in the FM Plant*, R. Orban

All manuals and user guides at all-guides.com

C❑ Open the front panel and remove the subpanel.

Remove the three hex-socket screws at the top of the front panel with a 5/64-inch hex wrench (provided with the unit), then tilt the hinged front panel downward. Loosen the four DZUS fasteners on the subpanel by turning each fastener 1/4-turn counterclockwise with a long 1/4-inch flat-blade screwdriver. Taking care not to stress the flat cables beneath it, tilt the top of the subpanel outward and to the left to clear the upper chassis lip and the door support rail at the right.

D❑ Carefully remove each circuit card, check that all IC components are properly seated in their sockets, then return each card to its slot.



Be sure power is off before removing or inserting any of the printed circuit cards.

2) Check the line voltage, fuse and power cord.

[DO NOT connect power to the unit yet.]

A❑ Check that the AC POWER switch behind the front panel is set to ON.

B❑ Check the line voltage.

The 8101B is shipped ready for 115 or 230V, 50/60Hz operation. Refer to the unit's rear panel for your Model # and the inside front cover of the manual for your Model #'s line voltage setting. To change the operating voltage, set the VOLTAGE SELECTOR to 115V or 230V as appropriate (voltages ±15% of the nominal voltage are acceptable).

C❑ Check the value of the fuse and change the fuse if the value is incorrect.

For safety the fuse must be 1/2-amp 250V Slow Blow fuse — 3AG or 250mA "T" type as appropriate for 115-volt (*or*) 230-volt operation.

D❑ Connect the 8101B's power cord to an appropriate AC power source.

The power cord is ordinarily terminated in a "U-ground" plug (USA standard), or CEE7/7 plug (Continental Europe), as appropriate to your unit's Model #. The green (or green/yellow) wire from the safety-ground prong is connected directly to the chassis.

If it becomes necessary to lift this ground to suppress ground loops, do so with a three-prong to two-prong adapter plug, rather than by damaging the power plug. But you should *not* defeat the ground unless absolutely necessary, because it eliminates the intrinsic safety feature of the three-wire system.

If you need to change the plug to match your country's standard, see Fig. 2-1 on page 2-6.

WARNING

If the earth ground is defeated, certain fault conditions in the unit or in the system to which it is connected can result in full line voltage between chassis and earth ground. Severe injury or death can then result if the chassis and earth ground are touched simultaneously.



All manuals and user guides at all-guides.com

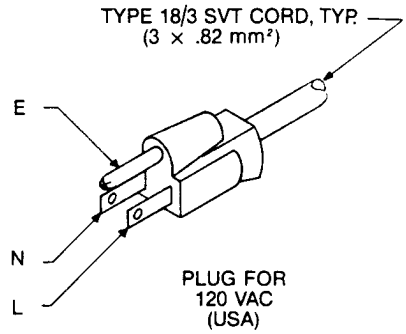

CONDUCTOR		WIRE COLOR	
		Normal	Alt
L	LINE	BROWN	BLACK
N	NEUTRAL	BLUE	WHITE
E	EARTH GND	GREEN-YELLOW	GREEN

Fig. 2-1: AC Power Cord Color Coding

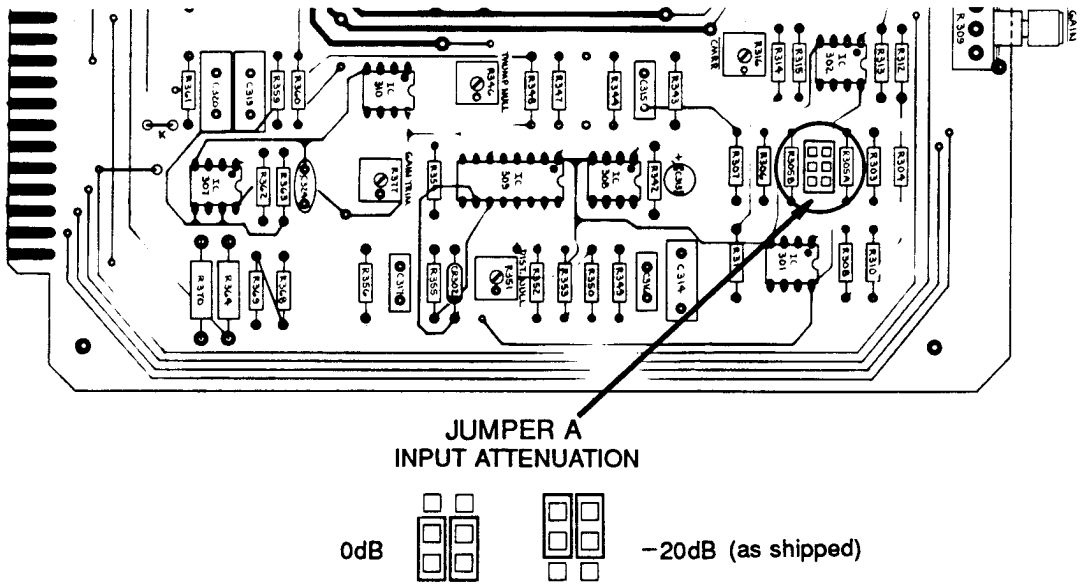

Fig. 2-2: Jumper Positions, Cards #3 and #4

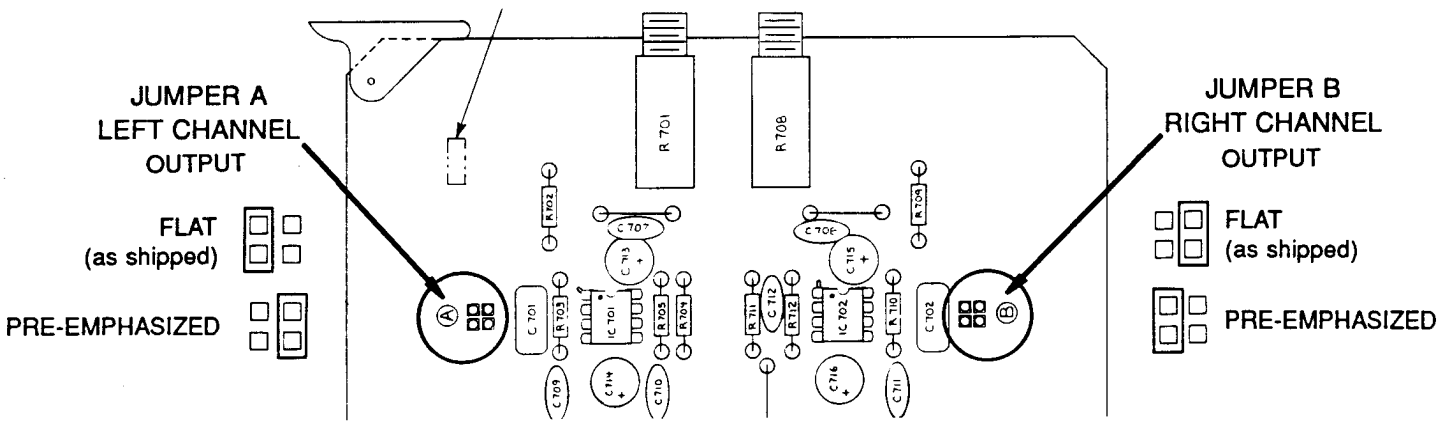

Fig. 2-3: Jumper Positions, Card #7

All manuals and user guides at all-guides.com

3) Set the rear-panel STEREO GENERATOR switch to OUT.

[Skip this step if there is no STEREO GENERATOR *switch on the rear panel.]*

The STEREO GENERATOR switch has no function on the 8101B (this rear panel is also used on other products) — but it *must* be set to OUT for the 8101B to operate properly.

4) Check lamps and meter.

A❑ Power the unit.

B❑ Verify that the GATE and POWER lamps light, and that the HF LIMIT lamps remain unlit.

If they do not, repeat step 1. If that does not correct the problem, see the troubleshooting information in Section 5.

C❑ With the VU meter selector set to one of the unlabeled positions, mechanically zero the VU meter by turning its adjustment screw slightly.

D❑ Verify that the VU meter reads 0% for all positions of the meter selection switch — *except* the +15 VDC and −15 VDC positions, where it should read 100% ±5%.

If a meter reading is abnormal, repeat step 1. If that does not correct the problem, see Section 5.

E❑ Disconnect the power.

5) Verify performance. (optional)

If you would like to perform a complete field audit of the 8101B's performance before installing it, see page 4-11.

6) Change initialization options. (optional)

[Skip this step if you want input sensitivity of −10 to +10dBu, the 30Hz high-pass filters enabled, and flat output. Read the following for more information on these options.]

A❑ Change input attenuation. (optional)

Card #3 (left channel) and Card #4 (right channel) are shipped with 20dB pads ahead of the input buffer amplifiers. This is appropriate for nominal input levels from −10 to +10dBu. If lower input levels (−30 to −10dBu) are used, the pads must be defeated by repositioning jumper A on each card to the 0dB position (see Fig. 2-2).

all-guides.com

All manuals and user guides at all-guides.com

B❑ Defeat 30Hz high-pass filter. (optional)

Because we believe that the overall broadcast system will work better with this filter in place (see page 6-7), no filter-defeat jumper has been provided. If you must defeat the filter, do so by connecting a jumper between pins 3 and 7 of IC302 on Card #3, and between pins 3 and 7 of IC402 on Card #4 (see the assembly drawing on page 6-52 for component location).

C❑ Select pre-emphasized output. (optional)

The 8101B as shipped produces a flat output. Ordinarily, pre-emphasis is provided by the pre-emphasis network built into your stereo coder. However, when the 8101B is installed at the transmitter, better peak control can be obtained if the stereo coder's input transformer, pre-emphasis network, and any filtering are bypassed, since OPTIMOD-FM can provide these functions with much better peak-control accuracy. To select pre-emphasized output, move jumpers A and B on Card #7 to the PRE-EMPHASIZED OUTPUT position (see Fig. 2-3).

IMPORTANT: The 8101B is shipped with either 75μs or 50μs internal pre-emphasis, depending on regulatory requirements in the country to which it is shipped (unless ordered otherwise). The pre-emphasis occurs on Card #6. Even if flat output is selected, the high-frequency limiter is still operating on the pre-emphasis curve — the flat output is obtained by complementary de-emphasis after the processing (on Card #7). So this internal pre-emphasis and de-emphasis must be the same as that used in the aural stereo coder or FM exciter, regardless of whether flat or pre-emphasized output is selected. Changing pre-emphasis from 50 to 75μs (or vice versa) is non-trivial, and requires changing the values of a substantial number of components. If you want to change pre-emphasis, please contact Orban Customer Service (see page 5-15).

7) Install Studio Chassis circuit cards. (optional)

[Skip this step if you will not be installing the optional 8100A/ST Studio Chassis.]

Read the discussion of where to locate OPTIMOD-FM on page 1-8.

A❑ Remove Cards #3, #4, and #5 from the 8101B.

B❑ Install Card #3TX in the 8101B's slot #3, and Card #4TX in 8101B slot #4.

These cards are supplied with the 8100A/ST. (No INPUT ATTENUATOR control knobs are supplied to decrease the chance of accidental misadjustment once the controls are set.)

C❑ Remove the top and bottom covers of the 8100A/ST Studio Chassis.

D❑ Install Cards #3 and #5 as shown in Fig. 2-4.

Attach the edge connectors to the cards, then secure the cards to the standoffs with the supplied 6-32 screws. Center the control knobs relative to their holes just before tightening down the screws.

See the 8100A/ST Operating Manual for additional information.

All manuals and user guides at all-guides.com

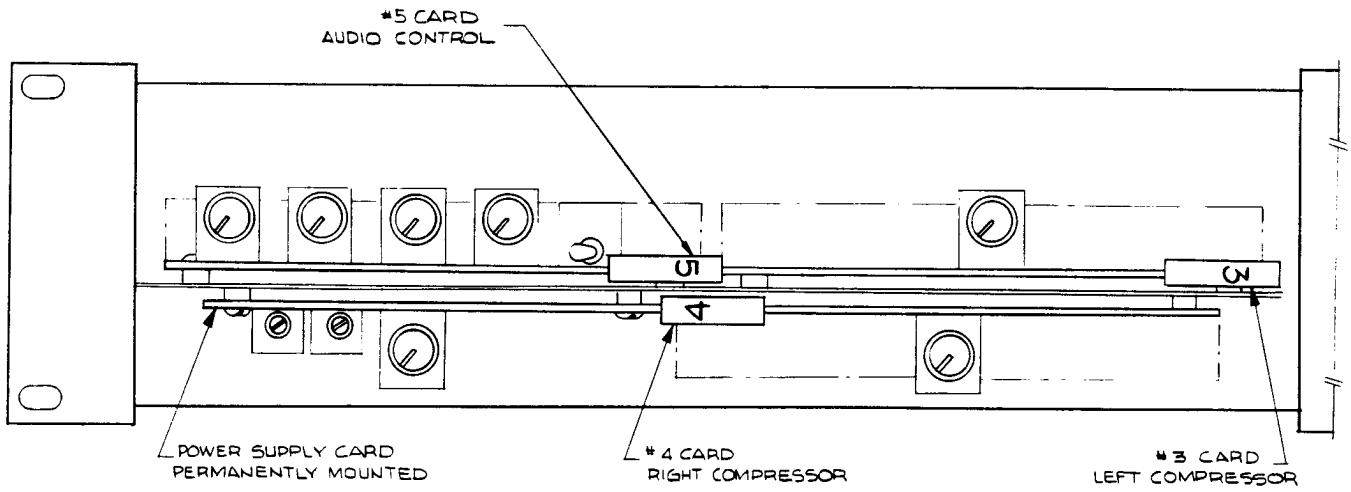

FRONT VIEW

Fig. 2-4: Card Positions, 8100A/ST Studio Chassis

E ❑ Turn the Studio Chassis upside-down, install Card #4 component side up, and secure the card with 6-32 screws.

F ❑ Replace the Studio Chassis' top and bottom covers.

All manuals and user guides at all-guides.com

8) Mount OPTIMOD-FM in rack.

A☐ Position and fasten the 8101B's subpanel.

The subpanel should always be replaced since it is an integral part of the chassis RFI protection.

Taking care not to stress the flat cables beneath it, tilt the top of the subpanel inward and to the left to clear the upper chassis lip and the door support rail at the right. The DZUS fasteners turn only 1/4-turn. Don't force them — they can be damaged in a way that is very time consuming to repair.

B☐ Raise the front panel and fasten the three screws that secure it in place.

C☐ Mount the 8101B in a rack.

At the studio, the OPTIMOD-FM may be located at any convenient rack space. When installed at the transmitter site, OPTIMOD-FM is ordinarily located close to the transmitter's stereo coder.

OPTIMOD-FM has been carefully designed to operate in high-energy VHF/UHF environments. No special placement precautions need be observed unless RFI is encountered in operation.

A good monitoring loudspeaker system located close to OPTIMOD-FM will facilitate subjective adjustments.

D☐ Connect the 8101B to earth ground.

It is important that the 8101B chassis be properly connected to a good earth ground. Measure the resistance between the chassis and earth ground to verify that it is less than 0.5 ohm.

In areas where electrical storms are frequent, it may be advisable to add suitable varistors between each incoming wire (power and audio) and a solid earth ground. Additionally, a third varistor across the AC line is helpful. Without such protection, nearby lightning strikes may induce sufficient energy into the audio input wiring to pass through the RFI protective networks and destroy IC301 or IC401 (NE5532). If the 8101B is installed in a lightning-prone location, it is advisable to keep spare NE5532 chips in stock.

E☐ Power the 8101B.

F☐ Reassemble, mount, ground, and power the 8100A/ST, if used.

See the 8100A/ST Operating Manual for detailed instructions. Note that the RFI suppression of the 8100A/ST Studio Chassis is modest because it was assumed that the unit would not be operated near high-powered transmitters.



NOTE: Equipment life will be lengthened if operated in moderate temperature and humidity, and if the air is reasonably dust-free and non-corrosive. Using some of the exhaust from the transmitter to heat the building slightly above ambient temperature is often sufficient to prevent problems. OPTIMOD-FM should never be operated in ambient temperatures that exceed 50°C (122°F).

All manuals and user guides at all-guides.com

9) Connect Studio Chassis' audio outputs to STL.

[Skip this step if you are not installing the optional 8100A/ST Studio Chassis.]

The output of the Studio Chassis will directly drive a land line or the balanced input of a microwave STL transmitter. It presents a 600-ohm pure-resistive source impedance, balanced to ground, with a nominal output level of +10dBm when loaded by 600 ohms.

> If local regulations require a low (<35-ohm) source impedance into the STL, the 8100A/ST's 600-ohm output impedance is inappropriate. In such cases a buffer amplifier with low impedance output can be placed between the output of the 8100A/ST and the line.

To drive an *unbalanced* load, connect the load between the + and circuit ground terminals of the Studio Chassis' left output. DO NOT ground the – output. (While this will not damage the unit, it will unnecessarily stress the line amplifier opamp.)

10) Connect 8101B's audio outputs to STL.

[Skip this step if you are installing the 8101B at the transmitter site.]

If OPTIMOD-FM is located at the studio site, its outputs should be connected directly to the telephone/post transformers. Do not use OPTIMOD-FM's outputs to feed telephone/post lines longer than approximately 2500 feet (760 meters) without a transformer (the telephone/post company usually provides this transformer). Even though OPTIMOD-FM's outputs are electronically balanced, very high common mode voltages (possibly high enough to exceed the common-mode range of OPTIMOD-FM's output amplifiers) can be induced on long lines that run near power cables.

Regulations governing the source impedance that OPTIMOD-FM must present to the STL vary from country to country. For flexibility, OPTIMOD-FM has been designed with a very low source impedance (<30 ohms). Resistors can be added in series to increase the effective source impedance.

> To make an **active-balanced, resistive <30-ohm connection** directly into a telephone/post transformer, connect the OPTIMOD-FM's + and – output connections directly to the telephone/post termination connection. (For the earlier 8101A, this would result in a 370-ohm connection.)
>
> To make an **active-balanced, resistive 600-ohm connection** directly into a telephone/post transformer, connect to the telephone/post termination connection through one 280-ohm ±1% resistor in series with OPTIMOD-FM's + output terminal and one 280-ohm ±1% resistor in series with OPTIMOD-FM's – output terminal. Four resistors are supplied with the 8101B for this purpose. (For the 8101A, use 115-ohm ±1% resistors.)
>
> To use a customer-supplied **transformer to present 150-ohm source impedance** to telephone/post line, connect OPTIMOD-FM's + and – output terminals directly to the primary of a 1:1 matching transformer. (This is not possible on the earlier 8101A.)
>
> To use a customer-supplied **transformer to present 600-ohm source impedance** to telephone/post line, connect OPTIMOD-FM's + and – output terminals directly to the primary of a 1:1 matching transformer. Connect the secondary to the telephone/post line, using a 226-ohm ±1% resistor in series with the each of the + and – output leads. Do not install

All manuals and user guides at all-guides.com

the resistors in series with the primary. (For the 8101A, use 57.6-ohm ±1% resistors.)

(We suggest the Jensen JE-11-FLCF transformer, manufactured by Jensen Transformers, Inc. at 10735 Burbank Boulevard, North Hollywood, CA 91601 USA, telephone: (213) 876-0059. It has excellent transient response and very low distortion. Since it adds DC resistance of 58 ohms per winding, the secondary presents approximately 150-ohm source impedance when connected directly to the telephone/post line.)

11) Connect 8101B's audio outputs to the stereo coder.

[Skip this step if you are installing the 8101B at the studio site.]

The outputs of OPTIMOD-FM are balanced to ground with a source impedance of <30 ohms. They can drive any load impedance of 300 ohms or greater.

(The earlier 8101A has a source impedance of 370 ohms, and can drive any load impedance of 600 ohms or greater.)

We recommend use of active input stages at the stereo coder. Most transformers will degrade the group delay performance of the system.

In a **high-RF radiation field**, run fully-balanced audio to the stereo coder in 100% foil-shielded, twisted-pair cable (like Belden 8451). Connect the shield to chassis ground at the source; connect the shield through a low-inductance 0.1µF disc capacitor to the stereo coder's INPUT ⏚ terminal (cut the capacitor's leads as short as possible).

In a **low-RF radiation field**, run balanced audio in shielded cable with the shield connected to chassis ground at the *source end only*. Audio may be run unbalanced in a low-RF field, if cable length is less than 20 feet (6 meters).

It is important that both left and right audio inputs be **in phase**. If a phasing error occurs, it will show up in on-air testing as an obvious phase-cancellation of center-channel material.

If bypassing of the stereo coder's input transformer, pre-emphasis network, and filtering (as recommended above for best peak level control) requires that the coder then be driven *unbalanced*, the driving signal should be taken between the 8101B's OUTPUT + and ⏚ terminals. Total load impedance is not critical, as long as it is ≥150 ohms.

CAUTION: Do not ground the − output in an attempt to get an unbalanced output; this will short the output of the − amplifier to ground through the RFI suppression filter. Just leave the − output floating.

If the recommended stereo coder modification results in very high input sensitivity, the input may have a tendency to pick up noise due to RFI. If this occurs, increase OPTIMOD-FM's output level, and build an attenuating pad at the coder. This pad should be designed to have an input impedance ≥300 ohms.

All manuals and user guides at all-guides.com

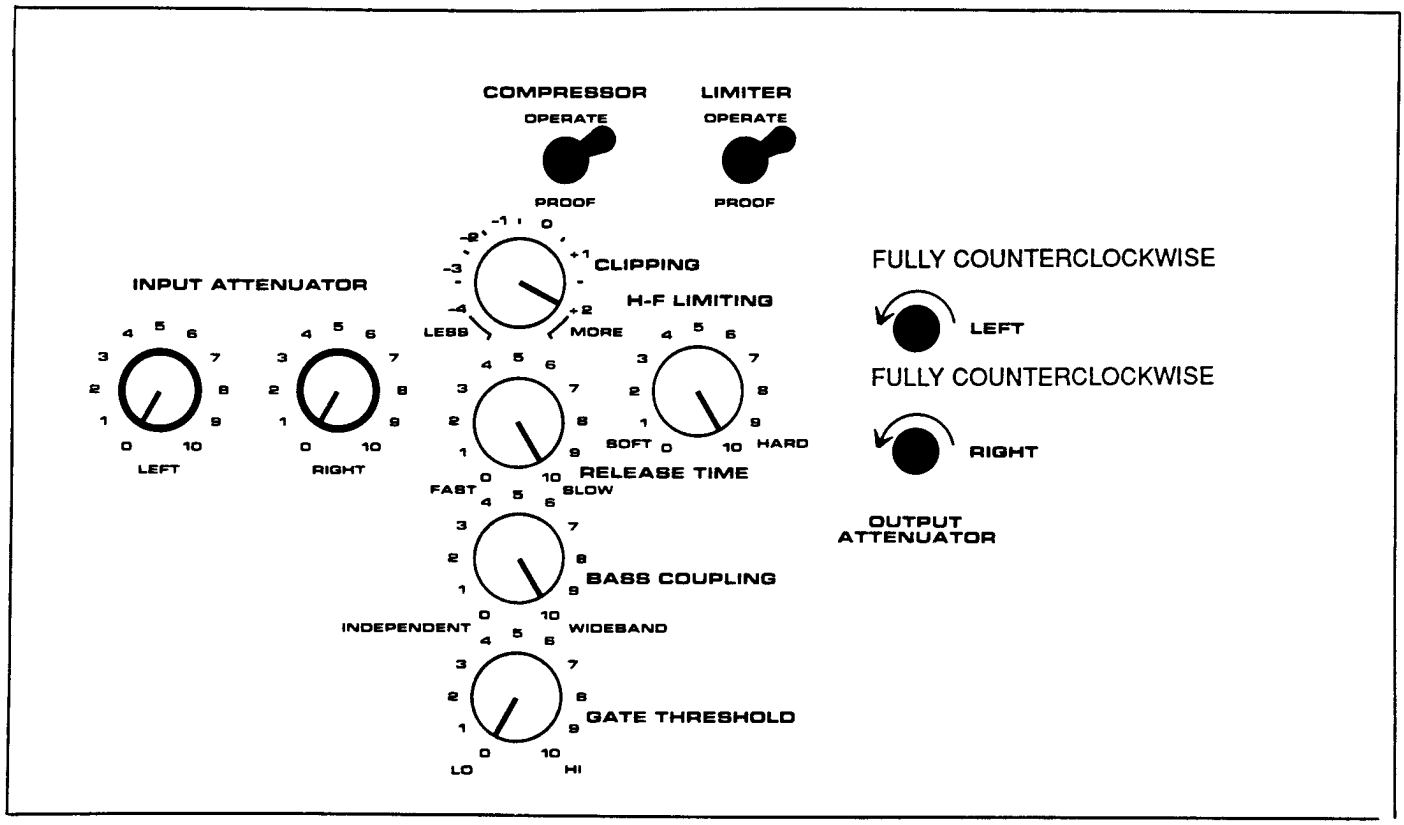

Fig. 2-5: Control Settings for Steps 12 and 13

12) Adjust output level using tone. (8101B at studio)

[Skip this step if the 8101B is located at the transmitter site.]

A❑ Set the 8101B's controls as shown in Fig. 2-5.

B❑ Connect an audio oscillator to the 8101B's L INPUT. Set the oscillator's frequency to 100Hz, and adjust its output level until the 8101B's TOTAL BASS G/R meter reads approximately 5dB.

C❑ Set the 8101B's COMPRESSOR switch to PROOF.

Leave the LIMITER switch set to OPERATE.

D❑ Set the 8101B's VU meter selector switch to L FILTER OUT and verify that the VU meter reads approximately +2VU.

E❑ Connect an audio voltmeter with a dB scale to the left channel STL line (after the transformer and resistors, if used).

All manuals and user guides at all-guides.com

F❑ Adjust the 8101B's LEFT OUTPUT ATTENUATOR control until your voltmeter reads 1.1dB below the maximum authorized line level.

> **NOTE:** When the COMPRESSOR switch is set to PROOF, it permits the output level of the compressor to rise 5dB beyond the threshold of compression. This ensures that the Hilbert Transform Clipper will be driven into gain reduction.
>
> The limiting threshold of the Hilbert Transform Clipper is internally set to 5% (±2%) below the flat-top threshold of the FCS™ overshoot compensator. The overshoot compensator can overshoot a maximum of 7% beyond this threshold. Thus, the output level adjustment aims at a meter reading of 1.1dB (12%) below the maximum peak level permitted in the circuit following the 8101B.

G❑ Set the 8101B's VU meter selector switch to L SYSTEM OUT and record the VU meter reading.

H❑ Disconnect the oscillator from the 8101B's L INPUT, and connect it to the 8101B's R INPUT.

I❑ Connect the audio voltmeter to the right channel STL line (after transformer and resistors, if used).

J❑ Adjust the 8101B's RIGHT OUTPUT ATTENUATOR control until your voltmeter reads 1.1dB below the maximum authorized line level.

K❑ Set the 8101B's VU meter selector switch to R SYSTEM OUT and verify that the VU meter reading is the same as that recorded in step G.

L❑ Set the 8101B's COMPRESSOR switch to OPERATE.

M❑ Disconnect the audio oscillator.

13) Adjust output level using tone. (8101B at transmitter)

[Skip this step if the 8101B is located at the studio site.]

A❑ Set the 8101B controls as shown in Fig. 2-5.

B❑ Connect an audio oscillator to the 8101B's L INPUT. Set the oscillator's frequency to 1kHz, and adjust its output level until the 8101B's TOTAL MASTER G/R meter reads approximately 10dB.

C❑ Turn on the transmitter.

D❑ Adjust the 8101B's LEFT OUTPUT ATTENUATOR control until your FM stereo peak modulation monitor indicates a left channel peak modulation of 60%.

> If no FM stereo modulation meter is available, adjust the LEFT OUTPUT ATTENUATOR control until the stereo coder's modulation meter indicates a left channel modulation of 60%.
>
> The "60% modulation" figure is somewhat arbitrary, as the appropriate figure will depend upon the overshoot performance of the low-pass filters

All manuals and user guides at all-guides.com

in your stereo coder, upon the time constant of the metering in the stereo monitor, and upon whether the stereo coder is being used with or without its internal pre-emphasis. If the stereo coder's internal pre-emphasis is not used, modulation is better controlled and a higher percentage of modulation can be chosen. The 60% figure must therefore be modified for your particular installation according to experience.

E❑ Set the 8101B's VU meter selector switch to L SYSTEM OUT and record the VU meter reading.

F❑ Disconnect the oscillator from the 8101B's L INPUT and connect it to the 8101B's R INPUT.

G❑ Verify that the 8101B's TOTAL MASTER G/R meter still shows approximately 10dB gain reduction.

H❑ Adjust the 8101B's RIGHT OUTPUT ATTENUATOR control until your FM stereo peak modulation monitor indicates a right channel peak modulation of 60%.

See note at step D.

I❑ Set the 8101B's VU selector switch to R SYSTEM OUT and verify that the VU meter reading is the same as the one recorded in step E.

If the readings are not the same, there is a left/right gain imbalance in the system after the 8101B, which should be corrected. Repeat step 13 after correcting this imbalance.

J❑ Disconnect the audio oscillator.

14) Connect program lines to the 8101B's audio inputs.

[Skip this step if you have installed the 8100A/ST Studio Chassis.]

The 8101B's inputs are electronically balanced. Input impedance is 11.2K with the 20dB pad operative, or 200K with the 20dB pad defeated. If the source requires a 600-ohm termination (as with most land lines, for example), connect a 620-ohm ±5%, ½-watt, carbon film resistor across each audio input. Two of these resistors are supplied with the 8101B for your convenience. OPTIMOD-FM should be fed unprocessed audio — no other audio processing is necessary or desirable.

In a **high-RF radiation field**, run fully-balanced audio to OPTIMOD-FM in 100% foil-shielded, twisted-pair cable (like Belden 8451). Connect the shield to chassis ground at the source; connect the shield through a low-inductance 0.1µF disc capacitor to the 8101B's INPUT ⏚ terminal (cut the capacitor's leads as short as possible).

In a **low-RF radiation field**, run balanced audio in shielded cable with the shield connected to chassis ground at the *source end only.* Audio may be run unbalanced in a low-RF field, if cable length is less than 20 feet (6 meters).

It is important that both left and right audio inputs be **in phase.** If a phasing error occurs, it will show up in on-air testing as an obvious phase-cancellation of center-channel material.

All manuals and user guides at all-guides.com

15) Match STL and OPTIMOD-FM levels.
(only if Studio Chassis is used)

[Skip this step if you are not also installing the 8100A/ST Studio Chassis.]

In this step, it is assumed that the STL is a pair of telephone/post land lines, a pair of microwave STLs, or a PCM link. It is also assumed that the 8100A/ST is being installed in a 600-ohm system. (The 8100A/ST is not capable of providing the 35-ohm source impedance required in some countries; if a 35-ohm source is required, install the 8101B at the studio and drive the STL directly from the 8101B's output.)

The 8100A/ST is designed to control levels for transmission over STLs. All STLs in common use have a maximum peak level (100% modulation) of +18dBm or less into 600 ohms. With its OUTPUT LEVEL controls turned fully clockwise, peak levels produced by the 8100A/ST will not exceed +17dBm. When fed *program material*, the 8100A/ST's output will be at 0VU (on an ANSI-standard VU meter, where 0VU = +8dBm into 600 ohms). When fed *tone*, the 8100A/ST's output level will be +3.6dBm into 600 ohms.

Depending upon local requirements and the type of STL, the 8100A/ST may be calibrated either for *average* or *peak* output level.

A☐ Connect the STL receiver's output to the 8101B's INPUT terminals.

B☐ Set the operating controls on the 8100A/ST Studio Chassis to these positions:

GATE THRESHOLD	0
BASS COUPLING	10
RELEASE TIME	10
CLIPPING	+2
COMPR	OP
OUTPUT LEVEL	fully counterclockwise (up to 18 turns)
INPUT ATTENUATORS	0

C☐ Connect an audio oscillator to the LEFT INPUT of the Studio Chassis. Set its frequency to 1kHz.

D☐ Adjust the audio oscillator's output level until the Studio Chassis' TOTAL MASTER G/R meter reads 10dB.

E☐ Adjust the Studio Chassis' LEFT OUTPUT LEVEL control as required.

USA-standard land lines or microwave STLs requiring a nominal input level of +8dBm and a resistive balanced driving impedance of 600 ohms can be driven directly by the Studio Chassis with its OUTPUT LEVEL controls turned fully clockwise (up to 18 turns).

For **land lines or microwave STLs that require a lower drive level than +17dBm** to prevent clipping of audio by line amplifiers (or to comply with government regulations), set the 8100A/ST's PROOF/OPERATE switch to PROOF (this causes the 8100A/ST to produce a clipped tone with a peak level equivalent to the maximum peak level produced by the 8100A/ST with program material). Then adjust the 8100A/ST's OUTPUT LEVEL controls for the maximum peak level required.

All manuals and user guides at all-guides.com

For a **microwave STL that is pre-emphasized at 50 or 75μs**, adjust the Studio Chassis' LEFT OUTPUT LEVEL control and/or the STL's input level to produce a level 15dB below the STL's 100% modulation level.

We recommend converting STL pre-emphasis/de-emphasis to 0 or 25μs wherever possible. This will maximize signal-to-noise ratio while preventing clipping, since the power spectrum of audio at the 8100A/ST approximates a 25μs de-emphasis. See your STL manual for conversion instructions.

For a **microwave STL that is not pre-emphasized or is pre-emphasized at 25μs**, adjust the Studio Chassis' LEFT OUTPUT LEVEL control and/or the STL's input level to produce a level 9dB below the STL's 100% modulation level.

F☐ Set the 8101B's VU meter selector switch to L COMPR OUT.

G☐ Adjust the 8101B's LEFT INPUT ATTENUATOR control until the VU meter reads 100%.

If a reading of 100% cannot be achieved, reposition the input attenuation jumpers on Cards #3TX and #4TX in the 8101B and try again (see the 8100A/ST Operating Manual for instructions).

H☐ Repeat steps C through G for the right channel.

Use the RIGHT INPUTS of the 8100A/ST and 8101B, the 8100A/ST's RIGHT OUTPUT LEVEL control, and the 8101B's R COMPR OUT meter position and RIGHT INPUT ATTENUATOR control.

I☐ Disconnect the audio oscillator from the Studio Chassis.

J☐ Connect the program lines to the Studio Chassis' LEFT and RIGHT INPUTS.

Read the wiring notes for step 14.

16) Remove circuit cards, set jumpers for Six-Band Limiter. (optional)

[Skip this step if you are not also installing the 8100A/XT2 Six-Band Limiter.]

These instructions supersede those in the 8100A/XT2 Operating Manual, which assume an 8100A/1 OPTIMOD-FM is being used.

A☐ Disconnect AC power from the 8101B, then open the front panel and remove the subpanel.

See page 4-5 for detailed instructions.

B☐ Remove Cards #0 and #1 from the 8101B.

Hilbert Transform Clipper Cards #0 and #1 will not be reinstalled while the 8100A/XT2 is in operation. Store them for possible future use, in case the 8100A/XT2 is ever removed from operation. These cards must be re-installed to perform the field audit of performance or field alignment instructions in Section 4.

All manuals and user guides at all-guides.com

C❑ Position jumpers A, B, and C on Card #5 as shown in Fig. 2-6.

If you have installed the 8100A/ST Studio Chassis, Card #5 is now located in the Studio Chassis. Power down the Studio Chassis, remove its top cover, move the jumpers, then reassemble and power the Studio Chassis.

D❑ Move jumper A on Card #6 to the WITH XT2 position (see Fig. 2-7).

E❑ Move jumpers A and B on Cards #8 and #9 to the WITH XT2 positions (see Fig. 2-8).

F❑ Replace the 8101B's subpanel, close its front panel, then re-connect AC power.

See page 4-5 for detailed instructions.

G❑ Mount the 8100A/XT2 in a rack, directly below the 8101B.

H❑ Plug the cord extending from the rear panel of the 8100A/XT2 into the ACCESSORY PORT on the 8101B's rear panel. Fasten the retaining screws securely.

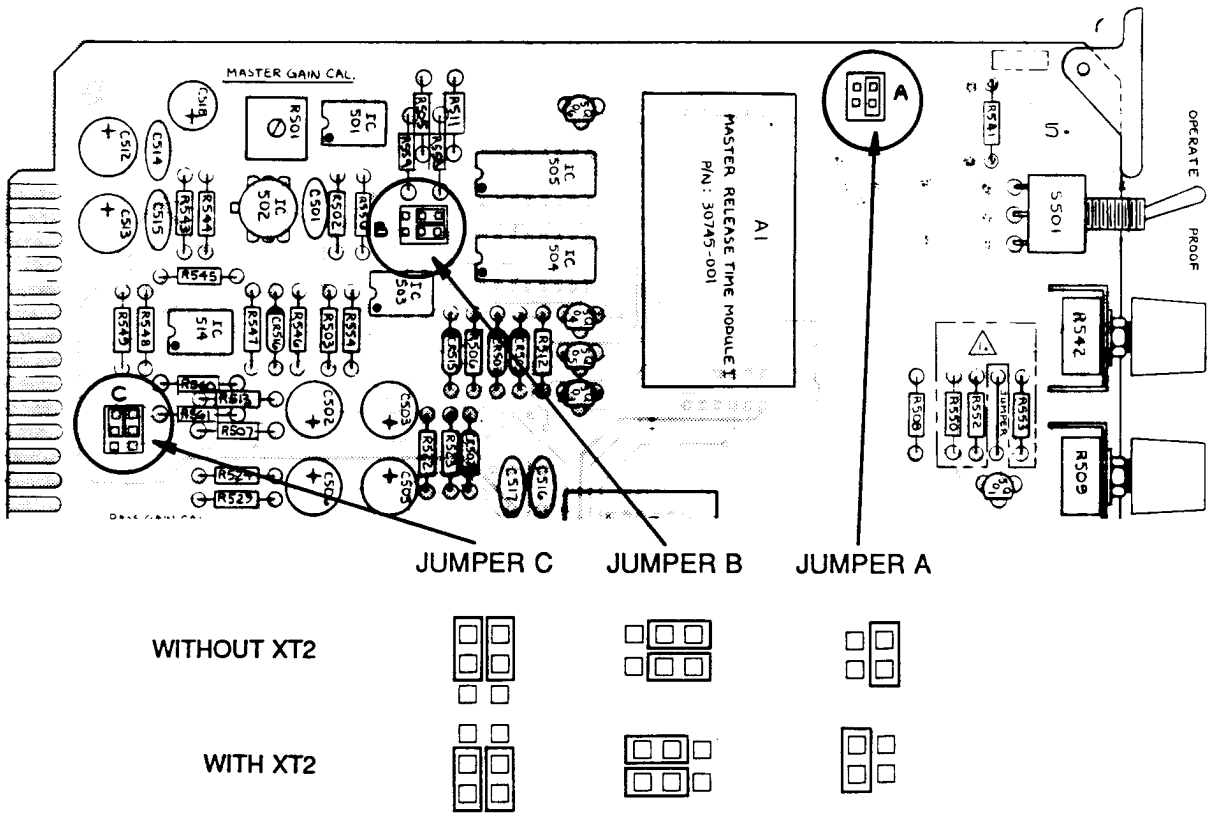

Fig. 2-6: Jumper Positions, Card #5

All manuals and user guides at all-guides.com

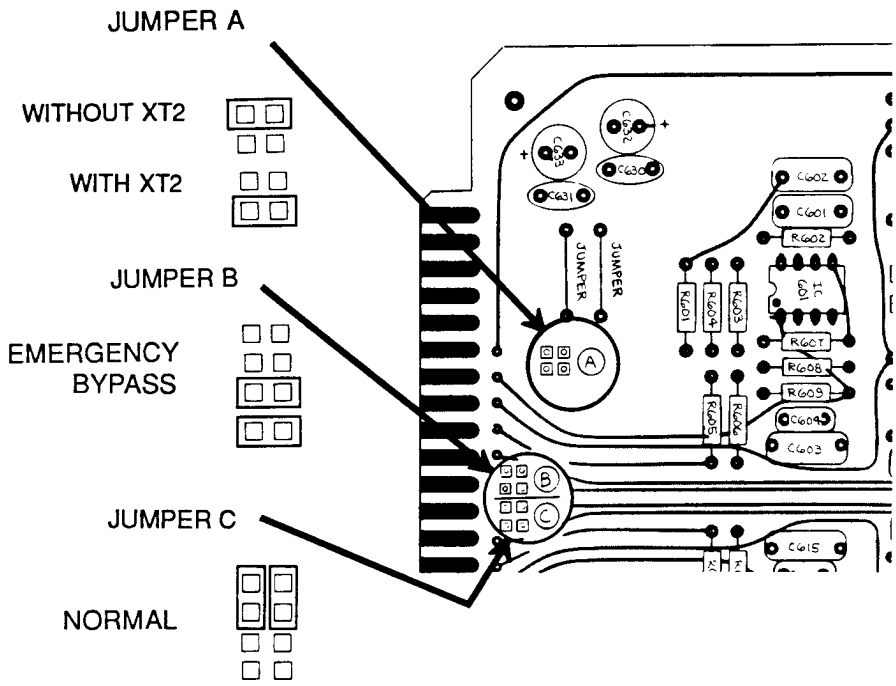

Fig. 2-7: Jumper Positions, Card #6

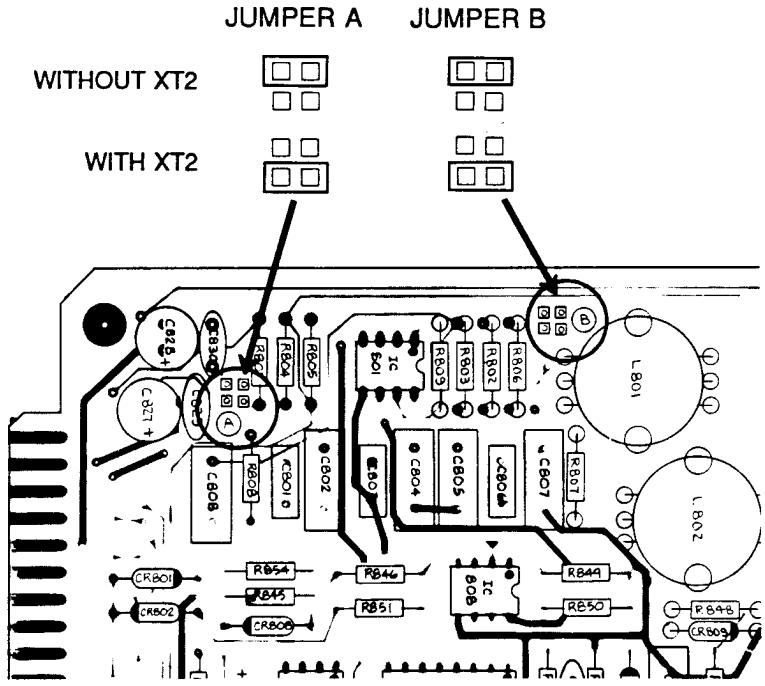

Fig. 2-8: Jumper Positions, Cards #8 and #9

All manuals and user guides at all-guides.com

17) Set controls, match levels with program material.

A☐ If you have installed the ***8100A/ST Studio Chassis,*** set its controls as shown in Fig. 2-9 — DO NOT readjust the 8101B's input attenuator controls.

B☐ If you have installed the ***8100A/XT2 Six-Band Limiter***, set the controls on the 8100A/XT2 and 8101B as indicated in Section 3 of the 8100A/XT2 Operating Manual.

C☐ If you are ***not*** installing the 8100A/ST Studio Chassis or 8100A/XT2 Six-Band Limiter, set the 8101B's controls as shown in Fig. 2-9 — DO NOT adjust the OUTPUT or INPUT ATTENUATOR controls at this time.

D☐ Feed OPTIMOD-FM a sample of your typical program material.

E☐ Set your console or desk to mono with both channels delivering identical levels. Peak the console VU meters or PPMs normally.

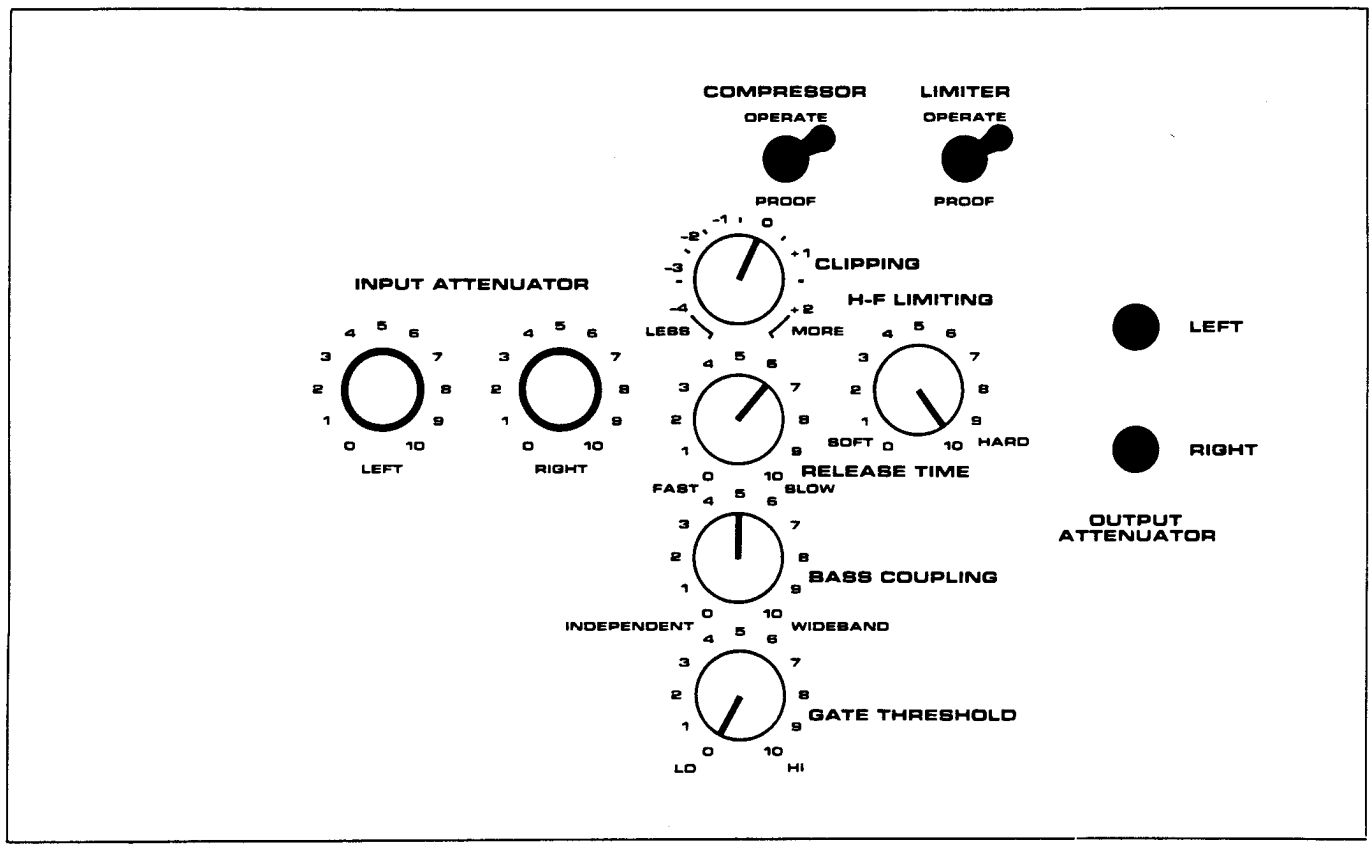

Fig. 2-9: Recommended Initial Control Settings for Most Program

All manuals and user guides at all-guides.com

IMPORTANT: In the following, adjust the 8101B's INPUT ATTENUATOR controls, *unless you have installed the 8100A/ST Studio Chassis.* In such a dual-chassis installation, adjust the Studio Chassis' INPUT ATTENUATOR controls **ONLY** — do not re-adjust the 8101B's INPUT ATTENUATOR controls.

F❑ Set the INPUT ATTENUATOR controls to 0.

G❑ Adjust the LEFT INPUT ATTENUATOR control until the MASTER TOTAL G/R meter indicates approximately 10dB gain reduction.

H❑ Adjust the RIGHT INPUT ATTENUATOR control until the VU meter reads the same with the selector switch set to L COMPR OUT as it does with the selector switch set to R COMPR OUT.

I❑ *(Optional)* If your installation is equipped with a stereo monitor capable of reading L–R levels, adjust the 8101B's RIGHT INPUT ATTENUATOR control to secure a null in the L–R level at the monitor when the 8101B is fed with mono (L=R) program material.

18) Verify modulation levels with program material.

The output level adjustments performed with tone in step 12 or 13 ensure that the output of OPTIMOD-FM is precisely peak-controlled to an absolute level.

If your regulatory authorities authorize use of a PPM as the level-determining instrument, you may be able to increase the settings of the OUTPUT ATTENUATOR controls. A PPM has a relatively long attack time. As a result, it does not respond to very short duration peaks. The difference in level indication between a PPM and a true peak-reading meter can be considerable if peak levels between the output of OPTIMOD-FM and the stereo coder have been disturbed because of non-constant group delay and/or non-flat frequency response.

If your regulatory authorities specify a true peak-reading modulation monitor to be the level-determining instrument, you may need to decrease the settings of the OUTPUT ATTENUATOR controls. This is because the peak levels may increase with some material if the frequency response between the output of OPTIMOD-FM and the input of the stereo coder is not perfectly flat, and/or there is non-constant group delay (see "Optimal Control of Peak Modulation Levels" on page 1-6).

A❑ Feed OPTIMOD-FM a sample of your typical program material.

B❑ Observe the modulation level on your modulation monitor, PPM, or true peak-reading meter (per your country's modulation measurement standards), and adjust OPTIMOD-FM's OUTPUT ATTENUATOR controls if necessary.

> *Do not* adjust OPTIMOD-FM's OUTPUT ATTENUATOR controls if they were adjusted to match a land line in step 12. In that case, modulation is under control of the operator of the lines and/or transmitter.

All manuals and user guides at all-guides.com

19) Connect remote gain reduction meter. (optional)

Total master gain reduction can be monitored remotely. See the box on page 2-23 for installation information.

The remote control terminals on the rear panel (if present) are inactive. Early 8101B units used a rear panel that was also used in another product. The 8101B does not have remote control facilities.

20) Complete the Registration Card and return it to Orban. (please)

The Registration Card enables us to inform you of new applications, performance improvements, and service aids which may be developed, and it helps us respond promptly to claims under warranty without having to request a copy of your bill of sale or other proof of purchase. Please fill in the Registration Card and send it to us today. (If it is lost, there is a duplicate on page 1-11.)

We do not sell our customers' names to advertising agencies.

all-guides.com

All manuals and user guides at all-guides.com

Installing a Remote Gain Reduction Meter

A negative voltage approximately proportional to the total master gain reduction is available between the G/R + and ⏚ terminals on OPTIMOD-FM's rear panel. The voltage scale is approximately −0.33V per dB of gain reduction, and the source impedance is 8.87K.

A standard 0–25dB Orban gain reduction meter can be connected directly between the G/R + terminal and ⏚ Connect the meter's − connection to the the G/R + terminal and its + connection to ⏚ The Orban meter has a sensitivity of 1mA full scale, and a DC resistance of 950 ohms. Full-scale corresponds to 30dB gain reduction. Because only 25dB gain reduction can be achieved, the last 5dB of the scale is printed in red to match the scale to the TOTAL BASS G/R meter (which is capable of, and fully calibrated to, 30dB gain reduction).

If an external meter with different characteristics is used, it is easy to calculate the required additional multiplier resistor for a 0–30dB scale with the formula:

$$M = \frac{9.75}{F} - 8870 - R$$

M = Required multiplier resistor in ohms
F = Full scale meter sensitivity in amps
R = Internal DC resistance of the meter in ohms

If M is negative, the meter you wish to use is not sensitive enough or has too high an internal resistance.

If you wish to interface the G/R output to a remote control for telemetry, bear in mind that the input impedance of the remote control will load down the G/R output and reduce the voltage according to the gain factor:

$$G = \frac{X}{X + 8870}$$

X = Input resistance of the remote control in ohms

The scaling of the remote control should therefore be $-0.33 \times G$ volts per dB gain reduction.

All manuals and user guides at all-guides.com

Notes:

All manuals and user guides at all-guides.com

Section 3 Operation

page contents

3-2 8101B Controls and Meters

3-4 Recommended Settings for the Best Sound

3-4 Fig. 3-1: Recommended Control Settings

3-6 Getting the Sound You Want

3-7 More About Audio Processing

3-7 Some audio processing concepts.

3-7 Loudness and density.

3-8 Gain reduction metering.

3-8 Gating.

3-9 Spectral balance.

3-9 High-frequency limiting to reduce distortion.

3-10 Peak control.

3-10 Equalization and "missing controls".

3-11 Quality of source material.

IMPORTANT

If you have installed the optional 8100A/ST Studio Chassis, adjust the controls on that unit, rather than on the 8101B.



All manuals and user guides at all-guides.com

8101B Controls and Meters

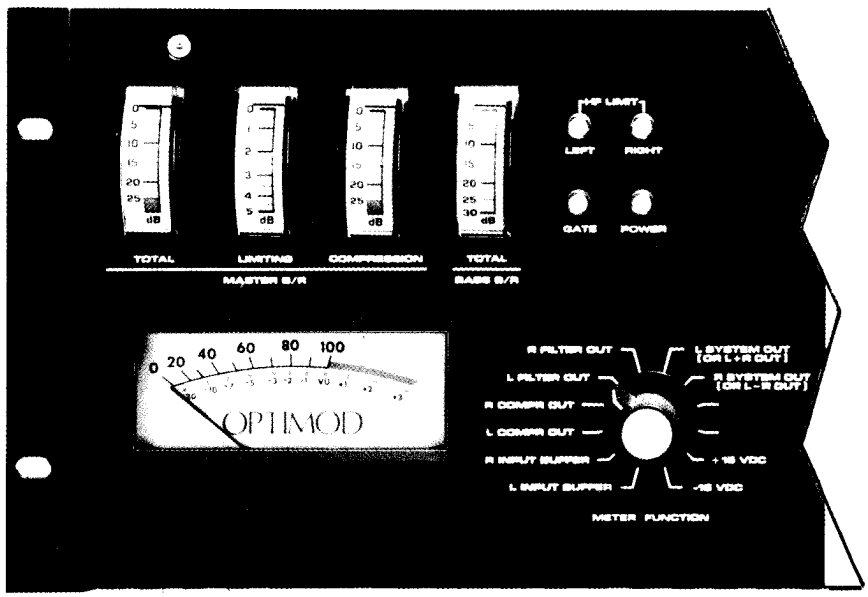

MASTER G/R meters show the amount of gain reduction in the "master" band compressor, which processes audio above 200Hz:

> **TOTAL** shows the peak value of gain reduction in dB. **LIMITING** shows the amount of fast gain reduction above and beyond that provided by slow compression. 0 on this meter indicates no additional limiting, and 3 (for example) indicates an extra 3dB peak-limiting gain reduction over that indicated by the **COMPRESSION** meter, which shows the amount of gain reduction in dB resulting from slow compression.

TOTAL BASS G/R meter shows the amount of gain reduction in the "bass" band compressor, which processes audio below 200Hz. Because almost all of the bass band gain reduction is effected by slow compression, there is no need for separate limiting and compression meters.

HF LIMIT lamps light when the high-frequency content of audio is being limited by the very fast high-frequency limiters.

GATE lamp lights when the input audio level falls below the threshold set by the GATE THRESHOLD control. When this happens, the compressor's recovery time is drastically slowed to prevent noise rush-up during low-level passages.

POWER lamp lights when the unit is powered. (It monitors the unregulated −22V DC bus.)

VU meter and selector switch display signal levels at various points in the circuitry (see Block Diagram on page 6-42) to aid in diagnosing faults. The meter also displays +15V and −15V power supply voltages (100% corresponds to 15VDC).

INPUT ATTENUATOR controls adjust the signal level driving the 8101B's dual-band compressor. This level determines the relative amount of gain reduction, and therefore the amount of compression and the increase in the loudness of quiet program material.

COMPRESSOR switch is used for testing. When set to PROOF, it disables the dual-band compressor.

All manuals and user guides at all-guides.com

The STEREO GENERATOR switch on the rear panel (if present) must be set to OUT for the 8101B to operate properly.

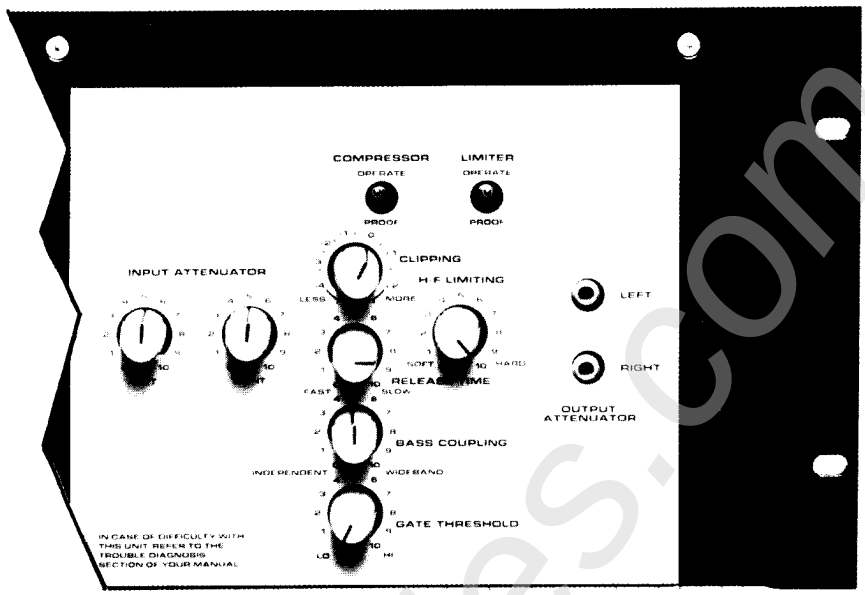

LIMITER switch is used for testing. When set to PROOF, it disables the high-frequency limiters, Hilbert Transform Clippers, FCS Overshoot Compensators, and safety clippers. (See OPT-022 note on page 4-11.)

CLIPPING control adjusts signal level going into the Hilbert Transform Clippers, and therefore determines the amount of peak limiting accomplished by clipping. Range is −4dB to +2dB (where 0dB represents our judgment of a setting that provides a high-quality "undistorted" sound without compromising loudness or modulation efficiency). The loudness/distortion trade-off is primarily determined by this control.

H-F LIMITING control determines the amount of high-frequency limiting. When set toward SOFT, the highs are controlled more by limiting, which can make them dull. When set toward HARD, the highs are controlled more by clipping, which can make them sound distorted.

RELEASE TIME control determines how fast the gain of the master band compressor increases when the program material gets quieter. Settings toward SLOW cause the compressor to act as a slow, subtle "hand on the fader". Settings toward FAST will result in increased program density.

BASS COUPLING control determines the degree to which the bass band of the compressor tracks the master band. Settings toward WIDEBAND produce an air sound that is more faithful to the spectral balance of the source material, while settings toward INDEPENDENT produce bass balances that are more uniform between program segments (often with increased bass).

GATE THRESHOLD control determines the lowest input level that the system considers program. Levels below this are considered noise, and the AGC/compressor gates, effectively freezing its gain to prevent noise breathing during pauses or low-level passages.

OUTPUT ATTENUATOR controls match the output level to the STL or stereo coder.

All manuals and user guides at all-guides.com

Recommended Settings for the Best Sound

The 8101B OPTIMOD-FM offers a wide range of flexibility, enabling you to fine-tune your air sound for your target audience and aesthetic sensibilities.

Fig. 3-1 shows five sets of recommended settings. Each set produces a different sound texture, and each incorporates a different set of trade-offs between openness, loudness, brightness, and distortion.

Start with one of these sets of recommended settings. Spend some time listening critically to your on-air sound. Listen to a wide range of program material typical of your format, and listen on several types of radios (not just on your studio monitors). Then, if you wish to customize your sound, read the rest of Section 3 — it is important to understand the functions and interactions of the audio processing controls before experimenting with them.

	TYPICAL PROGRAM				
	Classical	**Talk**	**Smooth Popular**	**Competitive Popular**	**Combination**
INPUT ATTENUATORs					
Adjust to produce approximately the indicated gain reduction on typical program material as shown on OPTIMOD-FM's TOTAL MASTER G/R meter:					
G/R Meter:	*0–10dB*	*10–15dB*	*10–15dB*	*10–15dB*	*
CLIPPING	–1	–1	0	1	–1
H-F LIMITING	10	10	10	6.5	10
RELEASE TIME	8	6	6.5	4.5	7
BASS COUPLING	8	8	5	2	8
GATE THRESHOLD	2.5	3	0	0	2.5
COMPRESSOR	OPERATE	OPERATE	OPERATE	OPERATE	OPERATE
LIMITER	OPERATE	OPERATE	OPERATE	OPERATE	OPERATE

* For combination formats, adjust the INPUT ATTENUATORs to produce 10–15dB gain reduction on popular music when the console's VU meters or PPMs indicate your normal peaking level. During operation, adjust console levels to your normal operating level for popular music and talk programs; adjust console levels 5–10dB below your normal operating level for classical music programs.

Fig. 3-1: Recommended Control Settings
8101B OPTIMOD-FM Audio Processor

All manuals and user guides at all-guides.com

The sound characteristics of the recommended settings are:

Classical

For classical, background music formats.

Classical music is traditionally broadcast with a wide dynamic range. However, with many recordings and live performances, the dynamic range is so great that the soft passages disappear into the noise on most car, portable, and table radios. As a result, the listener either hears nothing, or must turn up the volume control to hear all the music. Then, when the music gets loud, the radio blasts and distorts, making the listening rather unpleasant.

When adjusted to the recommended Classical settings, OPTIMOD-FM controls the level of the music in ways that are, for all practical purposes, inaudible to the listener. Low-level passages are increased in level by up to 10dB, while the dynamics of crescendos are maintained.

Talk

For talk, radio drama formats.

Processing for this sound keeps the levels of presenters, guests, and telephone calls more consistent. And it keeps a proper balance between voice and commercials. Voice is the most difficult program element to process. These settings result in a favorable trade-off between consistency, listening fatigue, and distortion.

Smooth Popular

For popular, Album-Oriented Rock, Adult Contemporary, Modern Country, Oldies, talk formats.

The sound texture for the station that values a clean, easy-to-listen-to sound on the air. This is an "unprocessed" sound that sounds just right on both music and voice when listened to on small table radios, car radios, portables, or home hi-fi systems.

Competitive Popular

For Adult Contemporary, Contemporary Hit Radio, Oldies, Modern Country, Urban formats.

This is the major market competitive sound, emphasizing loudness while retaining clean audio. With these settings, the sound gets farther away from the balance and texture of the original recording. This is as far as we think processing can go without causing noticeable listener fatigue.

Combination

For combinations of the above.

It is of course difficult to optimize the control settings if your your station broadcasts several different types of program material. Fortunately, there is a set of control settings that works surprisingly well in this situation. With these settings: popular music will have the depth and punch that attracts and holds listeners, while still sounding open; classical music won't disappear on soft passages, and it will retain its dynamics and drama on loud passages; and talk programs will sound very natural, but with consistent levels for presenter and guests.

All manuals and user guides at all-guides.com

Getting the Sound You Want

The OPTIMOD-FM can be adjusted so that the output sounds as close as possible to the input at all times, *or* so that it sounds open but more uniform in frequency balance (and often more dramatic) than the input, *or* so that it sounds dense, quite squashed, and very loud. The dense, loud set-up will make the audio seem to jump out of car and table radios, but may be fatiguing and invite tune-outs on higher quality home receivers.

In *any* of these set-ups, there is *a direct trade-off* between loudness, brightness, and distortion. You can improve one only at the expense of one or both of the other two. This is true of any processor.

Perhaps the most difficult part of adjusting a processor is determining the best trade-off for a given situation. We feel that it is usually wiser to give up ultimate loudness to achieve brightness and low distortion. A listener can compensate for loudness by simply adjusting the volume control. But there is *nothing* the listener can do to make a dirty signal sound clean again, or to undo the effects of excessive high-frequency limiting.

If processing for high quality is done carefully, the sound will also be excellent on small radios. Although such a signal might fall slightly short of ultimate loudness, it will tend to compensate with an openness, depth, and punch (even on small radios) that cannot be obtained when the signal is excessively squashed.

If women form a significant portion of the station's audience, bear in mind that women are more sensitive to distortion and listening fatigue than men. In any format requiring long-term listening to achieve market share, great care should be taken not to alienate women by excessive stridency, harshness, or distortion.

Best results will be achieved if Engineering, Programming, and Management go out of their way to *communicate* and *cooperate* with each other. It is important that Engineering understand well the sound that Programming desires, and that Management fully understand the trade-offs involved in optimizing one parameter (such as loudness) at the expense of others (such as brightness or distortion).

Never lose sight of the fact that, while loudness is easily controlled by the listener, the listener can't undo excessive high-frequency limiting or make a distorted signal clean again. If such excessive processing is permitted to audibly degrade the sound of the original program material, the signal is irrevocably contaminated and the original quality can never be recovered.

A high-quality monitor system is essential. To modify your airsound effectively, you must be able to *hear* the results of your adjustments. In too many stations, the best monitor is significantly inferior to the receivers found in many listeners' homes! See *Audio Quality in the FM Plant* (a separate Orban publication included with each unit) for a detailed discussion of how to efficiently create an accurate monitoring environment (and otherwise bring the audio plant up to state-of-the-art quality).

All manuals and user guides at all-guides.com

More About Audio Processing

[If you use one of the set-ups recommended in Fig. 3-1, there is no need to read this section. Read this section only if you really want to understand the operating controls in detail.]

The controls on the 8101B give you the flexibility to customize your station's sound. But, as with any audio processing system, proper adjustment of these controls consists of balancing the trade-offs between loudness, density, brightness, and audible distortion. The following provides the information you need to adjust the 8101B controls to suit your format, taste, and competitive situation.

Some audio processing concepts.

Loudness is increased by reducing the peak-to-average ratio of the audio. If peaks are reduced, the average level can be increased within the permitted modulation limits. The effectiveness with which this can be accomplished without introducing objectionable side effects (like clipping distortion) is the single best measure of audio processing effectiveness.

Compression reduces the difference in level between the soft and loud sounds to make more efficient use of permitted peak level limits, resulting in a subjective increase in the loudness of soft sounds. It *cannot* make loud sounds seem louder. Compression reduces dynamic range relatively slowly in a manner similar to "riding the gain"; limiting and clipping, on the other hand, reduce the short-term peak-to-average ratio of the audio.

Limiting increases audio density. Increasing density can make loud sounds seem louder, but can also result in an unattractive busier, flatter, or denser sound. It is important to be aware of the many negative subjective side effects of excessive density when setting controls which affect the density of the processed sound.

Clipping sharp peaks does not produce any audible side effects when done moderately. Excessive clipping will be perceived as audible distortion.

Loudness and density.

The amount of **gain reduction** determines how much the loudness of soft passages will be increased (and, therefore, how consistent overall loudness will be). It is controlled both by the setting of the INPUT ATTENUATOR controls and by the level at which the console VU meter or PPM is peaked.

The RELEASE TIME control determines how fast the compressor releases (and therefore how fast loudness increases) when the program material gets quiet. Settings toward FAST result in a more consistently loud output, while settings toward SLOW allow a wider variation in dynamic range. The actual release time of the compressor is determined by *both* the setting of the RELEASE TIME control *and* the dynamics and level of the program material.

Release automatically becomes faster as more gain reduction is applied (up to about 10dB), making the program progressively denser and creating a *sense of increasing*

All manuals and user guides at all-guides.com

loudness. This preserves some feeling of dynamic range, even though peak levels are not actually increasing. Once 10dB of gain reduction is exceeded, full loudness is achieved — no further increase in short-term density occurs as more gain reduction is applied. This avoids the unnatural, fatiguing sound often produced by processors at high gain reduction levels, and makes OPTIMOD-FM remarkably resistant to operator gain-riding errors.

When the RELEASE TIME control is set between 7 and 10, the amount of gain reduction is surprisingly non-critical. Since gating prevents noise from being brought up during short pauses, and pumping does not occur at high levels of gain reduction, the primary danger of using large amounts of gain reduction is that the level of soft passages in input material with wide dynamic range may eventually be increased unnaturally.

The action of the RELEASE TIME control has been optimized for resolution and adjustability. But its setting is *critical to sound quality* — listen carefully as you adjust the controls. There is a point beyond which increasing density (with faster settings of the RELEASE TIME control) will no longer yield more loudness, and will simply degrade the punch and definition of the sound. And with faster RELEASE TIME control settings (below 4), the sound will change substantially with the amount of gain reduction. This means that operator gain riding is more critical. Decide on the basis of listening tests how much gain reduction gives you the density you want without a creating feeling of overcompression and fatigue. We feel that our recommended setting (8) is clearly optimal, yielding the most natural sound with least detectable compression.

Regardless of the release time setting, we feel that the optimal amount of gain reduction for popular music and talk formats is 10–15dB. If less gain reduction is used, loudness can be lost. For classical formats, operating with 0–10dB of gain reduction maintains the sense of dynamic range while still controlling levels effectively. Since OPTIMOD-FM's density gently increases between 0 and 10dB of compression, 10dB of compression sounds very natural, even on classical music.

Gain reduction metering.

Unlike the metering on some processors, the **red zone** on the OPTIMOD-FM gain reduction meter's scale is a warning that must be observed. When the meter is in the red, it means that the compressor has run out of gain reduction range, that the circuitry is being overloaded, and that various nastinesses are likely to commence.

Because the compressor has 25dB of gain reduction range, the meter should never enter the red zone if OPTIMOD-FM has been set up for a sane amount of gain reduction under ordinary program conditions. But be aware of the different peak factors on voice and music — if voice and music are peaked identically on a VU meter, voice may cause up to 10dB more peak gain reduction than does music! (A PPM will indicate relative peak levels much more accurately.)

Gating.

The GATE THRESHOLD control determines the lowest input level that will be recognized as program by OPTIMOD-FM; lower levels are considered to be noise and cause the compressor to gate, effectively freezing its gain.

The gain reduction will eventually recover to zero even when the compressor is in a gated condition, but recovery is slow enough to be imperceptible. This avoids

All manuals and user guides at all-guides.com

loudness. This preserves some feeling of dynamic range, even though peak levels are not actually increasing. Once 10dB of gain reduction is exceeded, full loudness is achieved — no further increase in short-term density occurs as more gain reduction is applied. This avoids the unnatural, fatiguing sound often produced by processors at high gain reduction levels, and makes OPTIMOD-FM remarkably resistant to operator gain-riding errors.

When the RELEASE TIME control is set between 7 and 10, the amount of gain reduction is surprisingly non-critical. Since gating prevents noise from being brought up during short pauses, and pumping does not occur at high levels of gain reduction, the primary danger of using large amounts of gain reduction is that the level of soft passages in input material with wide dynamic range may eventually be increased unnaturally.

The action of the RELEASE TIME control has been optimized for resolution and adjustability. But its setting is *critical to sound quality* — listen carefully as you adjust the controls. There is a point beyond which increasing density (with faster settings of the RELEASE TIME control) will no longer yield more loudness, and will simply degrade the punch and definition of the sound. And with faster RELEASE TIME control settings (below 4), the sound will change substantially with the amount of gain reduction. This means that operator gain riding is more critical. Decide on the basis of listening tests how much gain reduction gives you the density you want without a creating feeling of overcompression and fatigue. We feel that our recommended setting (8) is clearly optimal, yielding the most natural sound with least detectable compression.

Regardless of the release time setting, we feel that the optimal amount of gain reduction for popular music and talk formats is 10–15dB. If less gain reduction is used, loudness can be lost. For classical formats, operating with 0–10dB of gain reduction maintains the sense of dynamic range while still controlling levels effectively. Since OPTIMOD-FM's density gently increases between 0 and 10dB of compression, 10dB of compression sounds very natural, even on classical music.

Gain reduction metering.

Unlike the metering on some processors, the **red zone** on the OPTIMOD-FM gain reduction meter's scale is a warning that must be observed. When the meter is in the red, it means that the compressor has run out of gain reduction range, that the circuitry is being overloaded, and that various nastinesses are likely to commence.

Because the compressor has 25dB of gain reduction range, the meter should never enter the red zone if OPTIMOD-FM has been set up for a sane amount of gain reduction under ordinary program conditions. But be aware of the different peak factors on voice and music — if voice and music are peaked identically on a VU meter, voice may cause up to 10dB more peak gain reduction than does music! (A PPM will indicate relative peak levels much more accurately.)

Gating.

The GATE THRESHOLD control determines the lowest input level that will be recognized as program by OPTIMOD-FM; lower levels are considered to be noise and cause the compressor to gate, effectively freezing its gain.

The gain reduction will eventually recover to zero even when the compressor is in a gated condition, but recovery is slow enough to be imperceptible. This avoids

All manuals and user guides at all-guides.com

OPTIMOD-FM's getting stuck with a large amount of gain reduction on a long, low-level musical passage immediately following a loud passage.

It is not unusual to set the GATE THRESHOLD control to 0. Higher settings are primarily useful for radio drama, outside sports broadcasts, and other non-musical programming in which it is undesirable to pump up ambiance, low-level crowd noise, and the like. Slightly higher settings may increase the musicality of the compression by slowing down recovery on moderate- to low-level musical passages. When such passages cause the gate to cycle on and off, recovery time will be slowed down by the ratio of the "on time" to the "off time". This effectively slows down the release time as the input gets softer and softer, thus preserving musical values in material with wide dynamic range (classical music, for example).

Spectral balance.

The compressor processes audio in two bands: a *master band* for all audio above 200Hz, and a *bass band* for audio below 200Hz. The BASS COUPLING control determines how closely the on-air balance between material below 200Hz and material above 200Hz matches that of the program material.

Settings toward WIDEBAND make the output sound most like the input. Because setting the BASS COUPLING control at 10 will sometimes cause bass loss, the most accurate frequency balance will often be obtained with this control between 7 and 10. The optimal setting depends on the amount of gain reduction applied. Adjust the BASS COUPLING control until the TOTAL BASS G/R and COMPRESSION MASTER G/R meters track as closely as possible.

With the RELEASE TIME control set to 8, setting the BASS COUPLING control toward INDEPENDENT will produce a sound that is very open, natural, and non-fatiguing, even with large amounts of gain reduction. Such settings will provide a bass boost on some program material that is bass-shy.

With fast release times, settings toward WIDEBAND are not appropriate for achieving ultimate loudness. Settings toward INDEPENDENT provide maximum loudness and density on small radios. But such processing may fatigue listeners with high-quality receivers, and will therefore require more careful operator gain riding. In applications where the greatest possible loudness and density are desired, the optional 8100A/XT2 Six-Band Limiter provides more effective control (see page 1-5).

High-frequency limiting to reduce distortion.

The H-F LIMITING control determines how the processor avoids high-frequency overloads due to the pre-emphasis curve. When set toward SOFT, the highs are controlled mostly by limiting (a form of dynamic filtering), which tends to soften highs — and this could improve the sound of marginally distorted program material. When set toward HARD, the highs are controlled mostly by clipping, which could potentially distort highs.

Control of highs by limiting tends to slightly dull the sound. Control of highs by clipping doesn't reduce brightness, but the resulting sound can tend towards grittiness and smearing.

Because the OPTIMOD-FM clipper cancels distortion at low frequencies, the H-F LIMITING control will have a different effect on clipping distortion than you might

All manuals and user guides at all-guides.com

expect. Gross break-up (principally sibilance splatter) will not occur — you must listen to the upper midrange and the highs to hear the effect of the clipper. Program material containing highly equalized hi-hat cymbals will clearly demonstrate the effect of adjusting the control.

When the CLIPPING control is set to 0 or below and the RELEASE TIME control is set to 8, it is possible to set the H-F LIMITING control to 10 without producing objectionable distortion (provided that the program material is super-clean). If the CLIPPING control is set above 0 and/or faster release times are used (such that greater level and density is produced), it is usually necessary to readjust the H-F LIMITING control closer to SOFT to avoid objectionable distortion. Fortunately, the high-frequency limiter "knows" that greater density and level have been produced when these other controls are set this way, and most of the necessary increases in high-frequency limiting will occur automatically. In fact, you will clearly hear a loss of highs when you adjust any control to produce greater loudness and density — this is an automatic response to the inherent loudness/brightness/distortion trade-off discussed above.

Peak control.

OPTIMOD-FM controls fast peaks by distortion-canceled clipping. The CLIPPING control adjusts the level of the audio driving the clippers, and therefore adjusts the peak-to-average ratio. The loudness/distortion trade-off is primarily determined by the CLIPPING control.

Turning up the the CLIPPING control drives the clippers harder, reducing the peak-to-average ratio, and increasing the loudness on the air. Since the amount of clipping is increased, the audible distortion caused by clipping is increased. Lower settings reduce loudness, of course, but result in a cleaner sound and better high-frequency response.

In our opinion, the best setting for the CLIPPING control is between −1 and 0 when the RELEASE TIME control is set between 7 and 10. If the program material is clean, this setting produces an output that sounds undistorted even on high-quality receivers.

If faster settings of the RELEASE TIME control are used, or if program material is not always clean, use lower settings of the CLIPPING control. Ultimately, your ears must judge how much distortion is acceptable. But use difficult program material like live voice and piano to make your final decision.

Equalization and "missing controls".

The 8101B is available in two very different configurations. By itself, it is designed to produce an output that is relatively faithful to the frequency balances of the original source material. With the optional 8100A/XT2 Six-Band Limiter, it can produce a highly-processed sound that may be attractive when auditioned without reference to the original source, but which does not attempt to preserve the textures or tonal balance of the source.

If you are accustomed to conventional multiband systems, be aware of the differences between that type of processing and OPTIMOD-FM. Multiband systems usually have *threshold* and *gain* controls on their compressors. The gain controls can be used as fixed equalizers, and the threshold controls determine the average level produced by each band.

All manuals and user guides at all-guides.com

Adjusting a conventional multiband threshold control to produce bass that is balanced to your taste involves serious compromises, because it usually results in excessive reduction of heavy bass that is intended to be there to make a musical point. A better solution is the 8101B's BASS COUPLING control, which can control bass balances without unnecessarily reducing bass impact.

Missing from OPTIMOD-FM are attack and release time adjustments for the master and bass compressor bands. The reason is simple: there is a clearly optimal choice for these time-constants — making them adjustable would simply be an invitation to trouble.

Finally, there is no high-band gain control that would permit the 8101B to be used as an high-frequency equalizer. The argument for omitting such a control is that the ear is far more sensitive to the frequency balance between midrange and highs than to the balance between midrange and bass. If high-frequency automatic re-equalization is done, it must be done with the greatest care. The 8100A/XT2 Six-Band Limiter has been configured (by use of two high-frequency bands, and by correct choice of crossover frequencies, crossover slopes, and high-frequency limiter characteristics) to provide powerful control over high-frequency sound texture while minimizing the probability that the processing will cause audibly undesirable side-effects.

The processing required to achieve this goal is complex and expensive — it is not possible to optimize this processing simply. Because of this, and because many may not require such processing, we have taken a modular approach to the design of OPTIMOD-FM. The 8101B therefore has no high-frequency equalizer control, and its high-frequency limiter operates in a way that highs are never increased. If such features are required, the 8100A/XT2 can be readily added to the system.

To achieve a particular sound, some stations boost highs and lows with a parametric equalizer before the audio signal is fed to the 8101B (the Orban 642B Equalizer works well for this). The 8101B handles this well, but we recommend that high-end pre-processing be done in moderation (3 to 4dB equalization) to avoid the further increase in overload distortion and clipping which could result from highly pre-processed material being reprocessed to match the 8101B's pre-emphasis curve.

Quality of source material.

As indicated above, a major potential cause of distortion is excess clipping. Another cause is poor-quality source material, including the effects of the station's playback machines, electronics, and studio-to-transmitter link. If the source material is even slightly distorted, that distortion can be greatly exaggerated by the OPTIMOD-FM — particularly if a large amount of gain reduction is used. Super-clean audio can be processed harder without producing objectionable distortion. See *Audio Quality in the FM Plant* (a separate Orban publication included with each unit) for a discussion of how to improve source quality.

All manuals and user guides at all-guides.com

Notes:

all-guides.com

All manuals and user guides at all-guides.com

Section 4 Maintenance

page contents

4-2 Routine Maintenance

4-4 Getting Inside the Chassis

4-11 Field Audit of Performance

4-17 Field Alignment

CAUTION

The installation and servicing instructions in this manual are for use by qualified personnel only. To avoid electric shock do not perform any servicing other than that contained in the Operating Instructions unless you are qualified to do so. Refer all servicing to qualified service personnel.



All manuals and user guides at all-guides.com

Routine Maintenance

The 8101B OPTIMOD-FM Audio Processor is a highly stable device which uses solid-state circuitry throughout. Recommended routine maintenance is minimal.

1) Periodically check VU and gain reduction meter readings.

Become familiar with normal VU meter readings, and with the normal performance of the G/R meters. If any meter reading is abnormal, see Section 5 for troubleshooting information.

2) Listen to the 8101B's output.

A good ear will pick up many faults. Familiarize yourself with the "sound" of the 8101B as you have set it up, and be sensitive to changes or deteriorations. But if problems arise, please don't jump to the conclusion that the 8101B is at fault. The troubleshooting information in Section 5 will help you determine if the problem is with OPTIMOD-FM or is somewhere else in the station's equipment.

3) Occasionally check the "standard level".

There are no effective, quick instrument tests that can be made using ordinary program material. But if a minute or so can be spared from normal programming, the following quick test of some of the more important performance parameters of the 8101B can be made using a sine-wave input. (A comprehensive "Field Audit of Performance" begins on page 4-11.)

See the troubleshooting information in Section 5 if the 8101B fails any of these tests.

A❑ Record the settings of the the 8101B's controls, so that they can be restored when you have completed the test.

B❑ Set the 8101B's controls as follows:

COMPRESSOR	OPERATE
LIMITER	OPERATE
CLIPPING	+2
H-F LIMITING	10
RELEASE TIME	10
BASS COUPLING	10
GATE THRESHOLD	0

C❑ Drive the 8101B's left channel with a 1kHz sine wave. Adjust the level until the 8101B's MASTER TOTAL G/R meter reads 10.

It will probably be most convenient to drive the 8101B through a console input.

All manuals and user guides at all-guides.com

D❑ Set the 8101B's VU meter selector to L COMPR OUT, and verify that the VU meter reads 0VU ±0.5VU.

If the 8100A/XT2 is installed, the VU meter should read −5VU ±0.5VU.

E❑ Set the VU meter selector to L FILTER OUT, and verify that the VU meter reads 0VU ±1.0VU.

If the 8100A/XT2 is installed, this test is not applicable.

F❑ Disconnect the sine wave generator from the left channel input.

G❑ Drive the 8101B's right channel with a 1kHz sine wave. Adjust the level until the MASTER TOTAL G/R meter indicates 10dB gain reduction.

H❑ Set the VU meter selector to R COMPR OUT, and verify that the VU meter reads 0VU ±0.5VU.

If the 8100A/XT2 is installed, the VU meter should read −5VU ±0.5VU.

I❑ Set the VU meter selector to R FILTER OUT, and verify that the VU meter reads 0VU ±1.0VU.

If the 8100A/XT2 is installed, this test is not applicable.

J❑ Disconnect the sine wave generator from the 8101B.

K❑ Restore the 8101B's controls to the settings recorded in step A.

4) Periodically check for corrosion.

Particularly in humid or salt-spray environments, check for corrosion at the input and output terminals and at those places where the 8101B chassis contacts the rack.

5) Periodically check for loss of grounding.

Check for loss of grounding due to corrosion or loosening of rack mounting screws.

6) Clean the front panel when it gets soiled.

Wash the front panel with a mild household detergent and a damp cloth. Stronger solvents should not be used because they may damage plastic parts, paint, or the silk-screened lettering (99% isopropyl alcohol can be safely used).

All manuals and user guides at all-guides.com

Getting Inside the Chassis

- Access **set-up controls** by opening the small door on the 8101B's front panel with the supplied key.
- Access the **AC POWER and VOLTAGE SELECTOR switches, and the fuse** by opening the 8101B's front panel.
- Access the **circuit cards** by opening the 8101B's front panel, then removing the subpanel.

Set-up, adjustment, and alignment of the 8101B requires access only to the front and rear panels and to those interior parts of the unit behind the front panel and subpanel. Almost all servicing can be done without removing either cover.

Further disassembly of the 8101B may be required for some service procedures.

For access to:	See page:
Behind front panel	4-5
Behind subpanel	4-5
Behind rear panel	4-6
Input Filter board	4-7
Unregulated power supply chamber	4-8
Power transistors, Card #PS (power supply regulator)	4-9



For best RFI protection, replace *all* screws and tighten them firmly. If screws are lost, replace them with screws of the same length (longer screws may cause mechanical interference or internal short circuits). Most screws used in the 8101B are undercut binding head for secure fastening without lockwashers (if a pan head screw is substituted, use an internal-star lockwasher). All screws are steel, plated with zinc (type II).

All manuals and user guides at all-guides.com

Front panel — open and close.

To open:

1) Close and lock the access door.

2) Remove the three hex-socket screws at the top of the front panel with a 5/64-inch hex wrench (provided with the unit), then slowly tilt the hinged front panel downward to reveal the interior.

To close:

1) Replace the subpanel if it has been removed.

   See below. *The subpanel should always be replaced,* since it is an integral part of the chassis RFI protection.

2) Check that the internal AC POWER switch is set to ON.

3) Raise the front panel and fasten the three screws that secure it in place with the 5/64-inch hex wrench provided with the unit.

Subpanel — remove, replace.

To remove:

1) Open the front panel (see above).

2) Loosen the four DZUS fasteners on the subpanel by turning each fastener 1/4-turn counterclockwise with a long 3/16- or 1/4-inch (6mm) flat-blade screwdriver.

3) Taking care not to stress the flat cables beneath it, tilt the top of the subpanel outward and to the left to clear the upper chassis lip and the door support rail at the right.

To replace:

The subpanel should always be replaced, since it is an integral part of the chassis RFI protection.

1) Taking care not to stress the flat cables beneath it, position the subpanel.

   Tilt the top of the subpanel inward and to the left to clear the upper chassis lip and the door support at the right.

2) Turn the DZUS fasteners 1/4-turn clockwise with a long 3/16- or 1/4-inch (6mm) flat-blade screwdriver.

   The DZUS fasteners turn only 1/4-turn. Don't force them — they can be damaged in a way that is very time consuming to repair.

all-guides.com

All manuals and user guides at all-guides.com

Rear panel — remove, replace.

To remove:

1) Disconnect the 8101B and remove it from the rack.

   It is not practical to remove the rear panel when the 8101B is mounted in a rack.

   If the covers are in place, they don't need to be removed.

2) Remove the eight screws holding the top cover to the flange of the rear panel. Also remove the eight screws holding the bottom cover to the the rear panel.

   The rear panel will remain solidly in place.

3) Set the unit upright on a padded surface with the rear panel facing you.

   Leave about 6 inches (15 cm) between the rear panel and the edge of the table. Be sure the AC power cord is unplugged.

4) Remove the three groups of three screws *circled in black* on the rear panel.

5) *Very carefully* pull the rear panel about ¾-inch (2cm) toward you, and then tilt the top of the rear panel down until the rear panel is horizontal.

   Careful! Watch for snags in the wiring or stress to the ceramic capacitors on the internal divider wall or RFI shielding box. These capacitors are very fragile and are difficult to replace.

To replace:

1) *Very carefully* tilt the rear panel up until it is vertical, and then push the rear panel forward into place.

   Take care that no wires are pinched between the panel and the chassis.

2) Replace the nine screws in the three groups of three screw holes circled in black on the rear panel. Also replace the sixteen screws that attach the top and bottom covers to the rear panel.

   Do not tighten any screws until all screws are loosely in place.

3) Return the 8101B to its rack, connect and ground unit.

All manuals and user guides at all-guides.com

Input filter board, RFI shielding box — remove, replace.

To open RFI shielding box and remove input filter board:

1) Open rear panel.

See page 4-6.

2) Remove the four 6-32 screws that hold the large, shallow, metal RFI shielding box to the inside of the rear panel.

3) *Very carefully and slowly* tilt the top of the metal RFI shielding box back to reveal the input filter circuit board.

> **Careful!** Watch for snags in the wiring or stress to the ceramic capacitors on the internal divider wall or RF shielding box. These capacitors are very fragile and are difficult to replace.

4) Remove the four 4-40 screws that attach the input filter circuit board to the rear panel. (optional)

> DO NOT attempt remove the input filter board — it is connected to the rear panel by wires. Just tilt it up to work on it.

To replace input filter board and RFI shielding box:

1) If the four 4-40 screws that attach the input filter board to the rear panel have been removed, replace them.

> If components have been replaced, make sure that reassembly will not crush or otherwise damage the components.

2) *Slowly and carefully* position the metal RFI shielding box so the screw holes in its flanges line up with the screw holes in the rear panel.

> Take care that no wires or components are pinched between the panel and the chassis. Dress wires appropriately.

3) Replace the four 6-32 screws that attach the RFI shielding box to the rear panel.

4) Close the rear panel.

See page 4-6.

All manuals and user guides at all-guides.com

Input filter board, RFI shielding box — remove, replace.

To open RFI shielding box and remove input filter board:

1) Open rear panel.

See page 4-6.

2) Remove the four 6-32 screws that hold the large, shallow, metal RFI shielding box to the inside of the rear panel.

3) *Very carefully and slowly* tilt the top of the metal RFI shielding box back to reveal the input filter circuit board.

> **Careful!** Watch for snags in the wiring or stress to the ceramic capacitors on the internal divider wall or RF shielding box. These capacitors are very fragile and are difficult to replace.

4) Remove the four 4-40 screws that attach the input filter circuit board to the rear panel. (optional)

> DO NOT attempt remove the input filter board — it is connected to the rear panel by wires. Just tilt it up to work on it.

To replace input filter board and RFI shielding box:

1) If the four 4-40 screws that attach the input filter board to the rear panel have been removed, replace them.

> If components have been replaced, make sure that reassembly will not crush or otherwise damage the components.

2) *Slowly and carefully* position the metal RFI shielding box so the screw holes in its flanges line up with the screw holes in the rear panel.

> Take care that no wires or components are pinched between the panel and the chassis. Dress wires appropriately.

3) Replace the four 6-32 screws that attach the RFI shielding box to the rear panel.

4) Close the rear panel.

See page 4-6.

All manuals and user guides at all-guides.com

Left side panel — remove, replace.

[Remove the left side panel to access the mains and raw DC power chamber.]

To remove:

1) Open the front panel (see page 4-5).

2) Remove the shoulder screw that attaches the door-support rail at the left.

   Note that there is a nylon washer between the rail and the side panel to prevent scraping.

3) Close the front panel and fasten it with the center screw *only*.

4) Turn the chassis so that the left rack flange faces you.

5) Remove the 5 screws that attach the top cover to the top of the left side panel. Also remove the 5 screws that attach the bottom cover to the left side panel.

   The left panel is to the left as you face the front of the unit — the side nearest the VU meter.

6) Remove the 3 circled screws on the rear panel that attach it to the left side panel.

7) Remove the 6 recessed screws on the left side panel.

8) Gently pull the side panel toward you and remove it.

To replace:

1) Position the left side panel and start (*but do not tighten*) the 6 recessed side-panel screws.

   Make sure the door support rail is positioned properly in its slot.

2) Replace (*but do not tighten*) the 3 circled screws that attach the rear panel to the side panel.

3) Replace (*but do not tighten*) the 5 screws that attach the top cover to the top of the left side panel. Also replace the 5 screws that attach the bottom cover to the left side panel.

4) Tighten all 19 screws.

5) Open the front panel (see page 4-5), and replace the shoulder screw.

   Be sure to position the nylon washer next to the left side panel.

6) Close the front panel (see page 4-5).

All manuals and user guides at all-guides.com

Power transistors, Card #PS — remove, replace.

To remove:

Because removal of Card #PS is difficult, the card has been designed to permit many servicing operations to be performed *without* removing the card from the chassis. IC chips are in sockets. Many of those components which are not mounted in sockets can be replaced from the top of the card by tack-soldering the new component to the lead stubs of the old, clipped-out component.

If Card #PS *must* be removed, follow these instructions carefully.

CAUTION

The rear panel is a heat dissipator for the power transistors. Proper contact is necessary to ensure sufficient transistor cooling.



1) Remove the four press-fit plastic plugs inside the recesses on the power transistor covers, using a pair of chain-nose pliers.

2) Loosen the two screws that attach each power transistor.

   These screws have captive nuts that will not fall into the chassis.

3) Remove the transistor covers and the associated screws and lockwashers from the rear panel.

4) Mark each transistor case to indicate the transistor's location and orientation.

5) *Very carefully and slowly* pull each transistor from its socket.

   If the silicone rubber insulator sticks to the panel, release it from the panel so that it sticks to the bottom of the transistor instead. After you remove each transistor, press its insulator back in close contact with the transistor.

   These insulators form themselves to the bottom surface of each transistor. Since they take a "set", they should not be interchanged or reversed.

6) Open the rear panel (see page 4-6).

7) Release Card #PS from its plastic post mounts by squeezing the tangs at each corner of the card, then pull the card off the posts.

All manuals and user guides at all-guides.com

To replace:

1) Replace Card #PS onto its plastic post mounts by pressing it over the four tangs at each corner of the card.

   Verify that the transistor sockets are aligned so that they seat in the rear-panel holes.

2) *Very carefully* reinstall the power transistors in their sockets.

   Be careful to replace the transistors in the same positions from which they were removed (refer to the marks made on the transistor cases during removal). Verify that the sockets are exactly aligned in the holes.

   The transistor insulators should not have been interchanged or reversed. If you must replace a power transistor, re-use the insulator if it is in good condition. With care, it will re-form itself as necessary. Otherwise, use a conventional mica insulator and white silicone heat-conducting compound.

3) Insert the screws and lockwashers in the transistor covers, and position them over the transistors.

   There *must* be a *split* lockwasher under the head of each screw to accommodate thermal cycling.

   These plastic covers do not attach in a conventional or readily obvious way. They ride on the circumference of the special split lockwasher and do not (and should not) become captured under the head of the screw. Consequently, the cover may be slightly loose even after screws are tightened securely. This is normal — do *not* try to "correct" it.

4) Tighten the screws.

   The screws mounting the transistors should be tightened *evenly*. For best thermal contact, tighten each screw a small amount, alternating between screws. Tighten securely, but not enough to damage the threads in the sockets.

5) Replace the four press-fit plastic plugs in the power transistor covers.

6) Close the rear panel (see page 4-6).

All manuals and user guides at all-guides.com

Field Audit of Performance

This procedure is useful for detecting and diagnosing problems with the 8101B's performance. It includes checks of frequency response, noise and distortion performance, and various parameters of normal operation (output level, distortion, high-frequency limiting threshold, and compressor timing circuitry).

By its nature, this performance audit is limited in scope to discovering *static* problems. A dynamic problem in the AGC circuitry (caused by the failure of a timing module on Card #5, for example) would generally not be detected by these tests. For this reason, instrument measurements must always be complemented by listening. If you are well-acquainted with the "sound" of the 8101B, faults that develop will ordinarily be quite easy to diagnose by ear.

Equipment required:

Ultra-low distortion sine-wave oscillator/THD analyzer/audio voltmeter

With verified residual distortion below 0.0015%. Sound Technology 1710B or equivalent preferred.

Spectrum analyzer with tracking generator

Tektronix 5L4N plug-in with 5111 bistable storage mainframe, or equivalent. *Alternatively*, a sweep generator with 50–15,000Hz logarithmic sweep can be used with an oscilloscope in X/Y mode.

Two 300Ω ±5% resistors.

It is often more convenient to make measurements on the bench away from high RF fields which could affect results. In a high RF field it is, for example, very difficult to accurately measure the very low THD produced by a properly-operating 8101B at most frequencies. However, in an emergency situation (and is there any other kind?), it is usually possible to detect many of the more severe faults which could develop in the 8101B circuitry even in high-RF environments.

See the assembly drawings in Section 6 for component locations. Be sure to turn the power off before removing or installing circuit cards.

Follow these instructions in order without skipping steps.

OPTION OPT-022 may have been installed in the 8101B where regulatory authorities require peak output levels to not exceed 4.5VRMS when driving post office lines. (Especially in Germany.) Units so equipped are identified by a label on the rear panel.

A LIMITER PROOF/OPERATE switch is provided on all units on the subpanel to facilitate testing. Because this switch can be operated accidentally when the 8101B is connected to post lines, thereby allowing output levels in excess of 4.5VRMS, units having OPT-022 have a momentary (spring-return) LIMITER switch. When performing test and alignment operations, disconnect the OPTIMOD-FM from outgoing program lines if they are subject to maximum level restrictions. Where mentioned in the testing and alignment instructions herein, this switch must be *held* in the PROOF position; it automatically returns to the OPERATE position when released.

All manuals and user guides at all-guides.com

STUDIO CHASSIS USERS: The following instructions assume you are *not* using the optional 8100A/ST Studio Chassis. If you are, you can do the field audit by connecting the Studio Chassis' output directly to the 8101B's input with short lengths of shielded cable (like Belden 8451). Match the 8101B's level to that of the STL in the same way the Studio Chassis was matched to the STL in step 15 on page 2-16. If you are using the Studio Chassis, read "Studio Chassis' IN terminals" for "8101B's INPUT terminals" in the following.

1) Prepare the unit.

A☐ Open up the front panel and remove the subpanel.

See page 4-5 for instructions.

B☐ Record the current settings of the 8101B's controls, then set the controls as follows:

INPUT ATTENUATORS	0
COMPRESSOR	PROOF (see OPT-022 note on page 4-11)
LIMITER	PROOF
CLIPPING	+2
H-F LIMITING	0
RELEASE TIME	10
BASS COUPLING	10
GATE THRESHOLD	0

C☐ *If the optional 8100A/XT2 Six-Band Limiter is installed,* disconnect it from the 8101B, re-install Cards #0 and #1 into the 8101B, and move jumpers on the 8101B's Cards #5, #6, #8, and #9 to the WITHOUT XT2 positions.

See step 16 on page 2-17. Move jumpers A, B, and C on Card #5, jumper A on Card #6, and jumpers A and B on Cards #8 and #9.

D☐ Verify that jumpers A and B on Card #7 are set for FLAT output.

See page 2-8. If not, reposition the jumpers.

E☐ Connect one 300Ω ±5% resistor between the L OUTPUT + and ⏚ terminals; connect another between the R OUTPUT + and ⏚ terminals.

Use 600Ω resistors for the earlier 8101A.

Use the ⏚ terminal labeled G/R, since this is only ⏚ terminal on the rear panel.

Adding these resistors will ensure correct response from the output RFI suppression network.

F☐ Connect the audio voltmeter to the 8101B's L AUDIO TEST JACK (J1).

The AUDIO TEST JACKS (which accept RCA phono plugs) will be used to measure pre-emphasized audio.

G☐ Connect the sine-wave oscillator to the 8101B's L INPUT terminals. Set the oscillator to 50Hz, and adjust its output level to produce a level of 3.3VRMS at the L AUDIO TEST JACK (J1).

This level corresponds to 100% modulation.

All manuals and user guides at all-guides.com

H❑ Disconnect the audio voltmeter from the L AUDIO TEST JACK (J1), and connect it between the L OUTPUT + and ⏚ terminals.

Flat audio will be measured between the OUTPUT terminals and circuit ground.

I❑ Adjust the LEFT INPUT ATTENUATOR control to produce a 3.3VRMS level at the L OUTPUT + terminal.

J❑ Disconnect the audio voltmeter from the L OUTPUT + and ⏚ terminals, and connect it to the R AUDIO TEST JACK (J2).

K❑ Disconnect the oscillator from the L INPUT terminals, and connect it to the R INPUT terminals. Adjust the oscillator's output level to produce a level of 3.3VRMS at the R AUDIO TEST JACK (J2).

L❑ Disconnect the audio voltmeter from the R AUDIO TEST JACK (J2), and connect it to the R OUTPUT + and ⏚ terminals.

M❑ Adjust the RIGHT INPUT ATTENUATOR control to produce a 3.3VRMS level at the R OUTPUT + terminal.

N❑ Disconnect the oscillator and audio voltmeter from the 8101B.

2) Check frequency response.

If a tracking or sweep generator and spectrum analyzer are not available, the frequency response can be measured with an audio oscillator and N&D test set. If you will be doing this, ignore the rest of step 2, and instead: Connect the oscillator as in step 1-G, but reduce its output level by 20dB (to avoid overloading the 8101B at high frequencies). Connect the N&D test set to the 8101B's L OUTPUT terminals. Measure the frequency response with the oscillator set to 1kHz, then verify that response at 50Hz, 100Hz, 400Hz, 5kHz, 10kHz, and 15kHz is within ±0.75dB of that measured at 1kHz. Repeat for the right channel.

A❑ Connect the output of a tracking or sweep generator to the the L INPUT terminals. Set the generator for a 20–20,000Hz logarithmic sweep, and adjust its output to obtain an on-screen trace.

B❑ Connect the input of a spectrum analyzer or oscilloscope to the L OUTPUT + and ⏚ terminals.

C❑ Verify that the swept output is flat ±0.75dB from 50–15,000Hz.

D❑ Disconnect tracking or sweep generator from the L INPUT terminals, and connect it the R INPUT terminals.

E❑ Disconnect the spectrum analyzer or oscilloscope from the L OUTPUT + terminal, and connect it to the R OUTPUT + terminal.

F❑ Verify that the swept output is flat ±0.75dB from 50–15,000Hz.

G❑ Disconnect the tracking or sweep generator and the spectrum analyzer or oscilloscope from the 8101B.

All manuals and user guides at all-guides.com

3) Check noise and distortion performance.

A❑ Connect a THD analyzer to the L OUTPUT + and ⏚ terminals. Set the THD analyzer's bandwidth to 80kHz.

B❑ Set the 8101B's VU meter selector to L FILTER OUT.

C❑ Connect the oscillator to the L INPUT terminals. Set the oscillator's frequency to 50Hz, and adjust its output level to produce a reading of +3VU on the VU meter.

This level is approximately equivalent to 100% modulation.

D❑ Verify that THD does not exceed 0.1%.

In many cases, measured results will be constrained entirely by the quality of the oscillator and distortion analyzer, and/or by the presence of RF fields.

E❑ Repeat steps C and D with the oscillator set to 100Hz, 400Hz, 1kHz, 5kHz, 10kHz, and 15kHz.

IMPORTANT: Each time you reset the oscillator's frequency, adjust its output level to produce a reading of +3VU (±0.5VU) on the VU meter.

Exception to step D: Up to 0.25% THD is acceptable at 5kHz if Cards #0 and #1 are in place. This increased distortion is an artifact of operating the Hilbert-Transform Clippers when the COMPRESSOR and LIMITER switches are set to PROOF, and does not represent their performance in normal operation (see page 6-19 for a technical explanation).

F❑ Short the 8101B's left input by connecting the +, −, and ⏚ INPUT terminals together.

G❑ Verify that the noise at the L OUTPUT terminals is below −63dBm.

For 8101B with OPT-022: It is not necessary to hold the LIMITER switch in the PROOF position during noise measurements.

Note that hum or buzz due to test equipment grounding problems and/or high-RF fields may result in falsely high readings. Such problems should become immediately apparent if the output of the THD analyzer is monitored with an oscilloscope.

H❑ Remove the shorting jumpers from the 8101B's inputs.

I❑ Disconnect the THD analyzer from the L OUTPUT + terminal, and connect to the R OUTPUT + terminal.

J❑ Set the VU meter selector to R FILTER OUT.

K❑ Disconnect the oscillator from the L INPUT terminals, and connect to the R INPUT terminals.

L❑ Repeat steps C through H for the right channel.

M❑ Disconnect the oscillator and THD analyzer from the 8101B.

all-guides.com

All manuals and user guides at all-guides.com

4) Check OPERATE mode operation.

A❑ Set the 8101B's controls as follows:

INPUT ATTENUATORS	0
COMPRESSOR	OPERATE
LIMITER	OPERATE
CLIPPING	+2
H-F LIMITING	0
RELEASE TIME	10
BASS COUPLING	10
GATE THRESHOLD	0

B❑ Connect the oscillator to the L INPUT terminals. Set the oscillator's frequency to 1kHz, and adjust its output level to produce a reading of 10dB on the TOTAL MASTER G/R meter.

C❑ Set the VU meter selector to L COMPR OUT.

D❑ Verify that the VU meter reads 0VU ±0.5VU.

E❑ Set the CLIPPING control to −1.

This will eliminate the clipping of sine waves that normally occurs when this control is set higher than −1. Such clipping could mask problems these tests might otherwise detect.

F❑ Connect the THD analyzer between the L OUTPUT + and ⏚ terminals. Set the THD analyzer's bandwidth to 80kHz.

G❑ Also connect the audio voltmeter between the L OUTPUT + and ⏚ terminals.

H❑ Set the oscillator to each of the frequencies listed below. Verify that the output level and THD for each frequency are similar to those listed for that frequency.

Frequency (Hz)	Level (V_{RMS})		THD (%)	
	75µs	50µs	75µs	50µs
50	1.65	1.75	0.07	0.04
100	1.80	1.70	0.07	0.03
1000	1.90	1.40	0.02	0.03
3000	1.40	1.30	0.04	0.04
12000	0.45	0.60	0.02	0.05

Use the 75µs values if your 8101B is configured for 75µs pre-emphasis; use the 50µs values if your 8101B is configured for 50µs pre-emphasis.

These typical values are intended to be as guidelines only — they are not guaranteed.

Any increase in THD at 50Hz is probably caused by the bass-band clipper. This can be checked by temporarily setting the CLIPPING control below −1; if the 50Hz distortion drops rapidly, the distortion is normal (caused by the fact that 50Hz is right at the threshold of the bass band clipper when the CLIPPING control is set to −1).

The action of the bass-band clipper is optimal for program material when the threshold of clipping is set low enough to produce a small amount of

All manuals and user guides at all-guides.com

harmonic distortion of *sine wave* test signals (which are not representative of speech or music). This prevents audible intermodulation between bass and high-frequency program material in the peak-limiting circuitry which follows pre-emphasis and high-frequency limiting.

Excessive THD at 100Hz not observed in step 3 is usually caused by problems in the bass-band timing module on Card #5.

Excessive THD at 1kHz is often caused by problems in the master-band timing module on Card #5.

Excessive THD at 3kHz can be caused by a failure in the high-frequency limiter on Card #6, or by failure in the Hilbert Transform Clipper on Card #0 (Card #1 for the right channel).

It is normal for the THD to increase to as high as 2% between 4 and 5kHz, due to the action of the Hilbert Transform Clipper (see page 6-18).

I☐ Disconnect the THD analyzer and audio voltmeter from the 8101B.

J☐ Set the H-F LIMITING control to 10.

K☐ Sweep the oscillator's frequency up from 800Hz, and verify that the LEFT HF LIMIT indicator lights at about 1.3kHz (lights at 1kHz if 75μs).

L☐ Set the oscillator's frequency to 5kHz, and adjust its output level to produce a reading of 15dB on the TOTAL MASTER G/R meter.

Note that the following tests of the compressor timing circuitry cannot detect some possible faults — such faults must be diagnosed by more sophisticated tests at the factory.

M☐ Abruptly reduce the oscillator's output level by 20dB, and verify that the TOTAL MASTER G/R meters rises from 15dB to 5dB in 6.5 seconds ±1.5 seconds.

N☐ Set the oscillator to 200Hz, and adjust its output level to produce a reading of 15dB on the TOTAL BASS G/R meter.

O☐ Abruptly reduce the oscillator's output level by 20dB, and verify that the TOTAL BASS G/R meters rises from 15dB to 5dB in 3 seconds ±0.75 seconds.

P☐ Disconnect the audio voltmeter from the 8101B.

Q☐ Repeat steps A through P for the right channel.

Use the R INPUT terminals, the R COMPR OUT setting of the VU meter selector, and the RIGHT HF LIMIT indicator.

5) Return OPTIMOD-FM to service.

A☐ If jumpers A and B on Card #7 were repositioned in step 1, return them to the positions appropriate for normal operation in your installation.

See page 2-8. If they were not moved, leave them in the FLAT position.

B☐ Remove the 300Ω resistors connected between the INPUT + and ⏚ terminals in step 1.

All manuals and user guides at all-guides.com

C❑ If the 8100A/XT2 Six-Band Limiter was disconnected in step 1, remove Cards #0 and #1 from the 8101B, return jumpers on the 8101B's Cards #5, #6, #8, and #9 to the WITH XT2 positions and reconnect the 8100A/XT2 to the 8101B.

See step 16 on page 2-17. Move jumpers A, B, and C on Card #5, jumper A on Card #6, and jumpers A and B on Cards #8 and #9.

D❑ Replace the subpanel and close the front panel.

See page 4-5 for instructions.

E❑ Reset the controls to the settings recorded in step 1.

Field Alignment

These field alignment instructions are included primarily for reference — *routine alignment is neither necessary nor desirable* due to the high stability of the circuitry.

WARNING

If calibration is necessary, we *strongly recommend* that the circuit card in question be returned to the factory for calibration by our experienced technicians. They have access to special test fixtures and a supply of exact-replacement spare parts. Only in an emergency should you attempt to align and calibrate the 8101B in the field.



Follow these instructions in order, without skipping steps.

This procedure is organized by circuit card, from the 8101B's input to its output, in signal path order. Because the calibration of each card depends upon accurate calibration of the cards before it, the cards must be calibrated in the order specified in these instructions. Since you do not have our special test fixtures, you must use the 8101B itself as a test fixture, and the entire unit must be aligned as a system. Note that no calibration is necessary for Card #7.

Refer to the drawings in Section 6 for locations of components and test points.

See OPT-022 note on page 4-11.

All manuals and user guides at all-guides.com

Equipment required:

Ultra-low distortion sine-wave oscillator/THD analyzer/audio voltmeter

With verified residual distortion below 0.0015%. Sound Technology 1710B or equivalent preferred.

Spectrum analyzer with tracking generator

Tektronix 5L4N plug-in with 5111 bistable storage mainframe, or equivalent. *Alternatively*, a sweep generator with 0–20kHz sweep can be used with an oscilloscope in X/Y mode for all cards except Cards #8 and #9 — a spectrum analyzer *must* be used to verify the calibration of Cards #8 and #9.

Digital voltmeter

Accurate to ±0.1%

Oscilloscope

DC-coupled, triggered-sweep, with 5MHz or greater vertical bandwidth.

One 137K 1% resistor

One 243K 1% resistor

One 1µF ±20% film capacitor (voltage unimportant)

Six 6-inch alligator-to-alligator jumper leads

It is assumed that the technician is thoroughly familiar with the operation of this equipment.

1) Prepare the unit.

A☐ Remove the 8101B from its rack and place it on a test bench *away from RF fields*.

B☐ Record the settings of all 8101B controls.

C☐ *If the optional 8100A/XT2 Six-Band Limiter is installed,* disconnect it from the 8101B, re-install Cards #0 and #1 into the 8101B, and move jumpers on the 8101B's Cards #5, #6, #8, and #9 to the WITHOUT XT2 positions.

See step 16 on page 2-17. Move jumpers A, B, and C on Card #5, jumper A on Card #6, and jumpers A and B on Cards #8 and #9.

D☐ Connect the 8101B's ⏚ and ⏚ terminals together.

E☐ Open up the 8101B's front panel and remove its subpanel.

See page 4-5 for instructions.

F☐ Set the 8101B's AC POWER switch to OFF.

All manuals and user guides at all-guides.com

G❑ Remove Cards #4 and #5 from the 8101B.

H❑ Remove Card #3 from its slot, insert an extender card into slot #3, then insert Card #3 into the extender card.

I❑ Set the AC POWER switch to ON.

Each time you turn on the 8101B, allow it to stabilize for 1 minute.

2) Calibrate 15-volt power supply on Card #PS.

A❑ Observe the voltage at pin B of any card connector in the card cage with a digital voltmeter.

B❑ Adjust +15 ADJ trimmer R106 until the digital voltmeter indicates +15.00 volts. (To access it, remove the rear panel as described on page 4-6.)

C❑ Verify that the voltage at pin E of any card connector in the card cage is between −14.85 and −15.15 volts.

If it is not, see the troubleshooting information in step 2 on page 5-4.

3) Calibrate Card #3. (part 1)

A❑ Connect one side of a 137K 1% resistor to a jumper lead, and connect the other end of the jumper to ground. Connect the free end of the resistor to the side of resistor R333 that is furthest from IC305.

The chassis is a convenient ground point. Short jumper leads will minimize hum and noise pickup.

B❑ Connect one side of a 243K 1% resistor to a jumper lead, and connect the other end of the jumper to ground. Connect the free end of the resistor to the side of resistor R348 that is furthest from IC309.

These external resistors now force reference gain-control currents into master band VCA IC305a (97μA) and bass band VCA IC309a (55μA).

C❑ Connect the chassis ground of a sine-wave oscillator to the 8101B's chassis. Connect the low side of the oscillator's output to the 8101B's chassis. Connect the high side of the oscillator to the L INPUT+ and − terminals in parallel.

This provides common-mode excitation for the input differential amp.

D❑ Set the oscillator to 50Hz, and adjust its output to 0dBu.

0dBu = 0.775VRMS. For this application, the dBm into 600Ω scale on voltmeters can be read as if it were calibrated in dBu.

E❑ Connect the audio voltmeter to test point TP1 on Card #3 (or to pin D of the card connector). Adjust the audio voltmeter so that the common-mode feedthrough is readily observed.

F❑ Adjust CMRR trimmer R316 to null the common-mode feedthrough.

The nulled level should be below −60dBu.

All manuals and user guides at all-guides.com

G☐ Disconnect the high side of the oscillator's output from the L INPUT – terminal.

Leave the high side of the oscillator's output connected to the L INPUT + terminal.

H☐ Connect the low side of the oscillator's output to the L INPUT – terminal.

I☐ Set the oscillator's output frequency to 1kHz and adjust its level to produce a −15.00dBu level at test point TP1 (or at pin D of the card connector).

J☐ Adjust MASTER VCA GAIN trimmer R376 to produce +2.00dBu (±0.20dBu) at test point K (or at pin K of the card connector).

The signal at test point K (or pin K) is the output of IC307a.

K☐ Set the oscillator's frequency to 35Hz. If necessary, readjust its output level until it is once again −15dBu at TP1.

L☐ Adjust BASS VCA GAIN trimmer R377 to produce +2.0dBu (±0.2dBu) at test point K (or at pin K of the card connector).

4) Calibrate Card #3. (part 2)

A☐ Without disturbing the oscillator's output level, set its frequency to 5kHz.

B☐ Connect the THD analyzer to test point K on Card #3 (or to pin K of the card connector).

C☐ Adjust MASTER DIST NULL trimmer R336 to null the THD.

THD should not exceed 0.04% if a noise-limiting 80kHz low-pass filter is employed in the measurement.

IMPORTANT

Any stray audio or noise picked up on the leads of the 137K jumper resistor will cross-multiply with the desired signal in the VCA, and will produce second-harmonic distortion which cannot be nulled with the MASTER DIST NULL trimmer. It may be necessary to bypass the R333 side of the 137K resistor to ground with a tantalum capacitor with a value of at least 4.7µF at 15VDC (ground the + terminal of the capacitor).

D☐ Set the oscillator's frequency to 50Hz.

E☐ Adjust BASS DIST NULL trimmer R351 to null the THD.

THD should not exceed 0.04%.

F☐ Disconnect the oscillator from the L INPUT terminals.

All manuals and user guides at all-guides.com

G❑ Ground the low side of the oscillator's output to the 8101B chassis and (with a pair of jumper leads) connect the high side of the oscillator's output through a 1μF film capacitor to the side of resistor R333 furthest from IC305.

The 137K resistor is already connected to this point. Don't disturb it.

H❑ Set the oscillator's frequency to 100Hz, and adjust its output level to produce approximately 0.25VRMS at its output.

I❑ Observe test point K (or pin K on the card connector) with the audio voltmeter at high gain.

J❑ Adjust MASTER VCA THUMP NULL trimmer R331 to null the feedthrough.

You will see a distorted feedthrough component from the oscillator before nulling.

K❑ Move the lead with the 1μF capacitor from R333 to the corresponding side of resistor R348.

Do not disturb the resistor already connected to this point.

L❑ While observing test point K (or pin K on the card connector) with the audio voltmeter at high gain, adjust BASS VCA THUMP NULL trimmer R346 to null the feedthrough component observed.

M❑ Remove all jumper leads connected to Card #3, as well as the resistors and capacitors added during this calibration.

N❑ Set the AC POWER switch to OFF.

O❑ Remove Card #3 from the card extender, and set it aside.

Leave the card extender in slot #3.

5) Calibrate Card #4. (part 1)

A❑ Insert Card #4 into slot #3.

B❑ Set the AC POWER switch to ON.

C❑ Connect one side of a 137K 1% resistor to a jumper lead, and connect the other end of the jumper to ground. Connect the free end of the resistor to the side of resistor R433 that is furthest from IC405.

D❑ Connect one side of a 243K 1% resistor to a jumper lead, and connect the other end of the jumper to ground. Connect the free end of the resistor to the side of resistor R448 that is furthest from IC409.

These external resistors now force reference gain-control currents into master band VCA IC405a (97μA) and bass band VCA IC409a (55μA).

E❑ Connect the chassis ground of the oscillator and the low side of the oscillator's output to the 8101B chassis. Connect the high side of the oscillator to the 8101B's R INPUT + and − terminals.

This provides common-mode excitation for the input differential amp.

All manuals and user guides at all-guides.com

F❑ Set the oscillator's frequency to 50Hz, and adjust its output to 0dBu.

G❑ Connect the audio voltmeter to test point TP1 on Card #4 (or to pin D of the card connector). Adjust the audio voltmeter so that the common-mode feedthrough is readily observed.

H❑ Adjust CMRR trimmer R416 to null the common-mode feedthrough.

The nulled level should be below −60dBu.

I❑ Disconnect the high side of the oscillator's output from the L INPUT − terminal.

Leave the high side of the oscillator's output connected to the R INPUT + terminal.

J❑ Connect the low side of the oscillator's output to the R INPUT − terminal.

K❑ Set the oscillator's output frequency to 1kHz and adjust its level to produce a −15dBu level at test point TP1 (or at pin D of the card connector).

L❑ Adjust MASTER VCA GAIN trimmer R476 to produce +2.00dBu (±0.20dBu) at test point K or at pin K of the card connector).

The signal at test point K (or pin K) is the output of IC407a.

M❑ Set the oscillator's frequency to 35Hz. If necessary, readjust its output level until it is once again −15dBu at TP1.

N❑ Adjust BASS VCA GAIN trimmer R477 to produce +2.0dBu (±0.2dBu) at test point K (or at pin K of the card connector).

6) Calibrate Card #4. (part 2)

A❑ Without disturbing the oscillator's output level, set its frequency to 5kHz.

B❑ Connect the THD analyzer to test point K on Card #4 (or to pin K of the card connector).

C❑ Adjust MASTER DIST NULL trimmer R436 to null the THD.

THD should not exceed 0.04% if a noise-limiting 80kHz low-pass filter is employed in the measurement.

IMPORTANT

Any stray audio or noise picked up on the leads of the 137K jumper resistor will cross-multiply with the desired signal in the VCA, and will produce second-harmonic distortion which cannot be nulled with the MASTER DIST NULL trimmer. It may be necessary to bypass the R433 side of the 137K resistor to ground with a tantalum capacitor with a value of at least 4.7µF at 15VDC (ground the + terminal of the capacitor).

All manuals and user guides at all-guides.com

D☐ Set the oscillator's frequency to 50Hz.

E☐ Adjust BASS DIST NULL trimmer R451 to null the THD.

THD should not exceed 0.04%.

F☐ Disconnect the oscillator from the R INPUT terminals.

G☐ Ground the low side of the oscillator's output to the 8101B chassis and (with a pair of jumper leads) connect the high side of the oscillator's output through a 1μF film capacitor to the side of resistor R433 furthest from IC405.

The 137K resistor is already connected to this point. Don't disturb it.

H☐ Set the oscillator's frequency to 100Hz, and adjust its output level to produce approximately 0.25VRMS at its output.

I☐ Observe test point K (or pin K on the card connector) with the audio voltmeter at high gain.

J☐ Adjust MASTER VCA THUMP NULL trimmer R431 to null the feedthrough.

You will see a distorted feedthrough component from the oscillator before nulling.

K☐ Move the lead with the 1μF capacitor from R433 to the corresponding side of resistor R448.

Do not disturb the resistor already connected to this point.

L☐ While observing test point K (or pin K on the card connector) with the audio voltmeter at high gain, adjust BASS VCA THUMP NULL trimmer R446 to null the feedthrough component observed.

M☐ Remove all jumper leads connected to Card #4, as well as the resistors and capacitors added during this calibration.

N☐ Set the AC POWER switch to OFF.

O☐ Remove Card #4 from the card extender and insert it into slot #4. Remove the card extender from slot #3.

P☐ Connect audio voltmeter to test point TP1 on Card #3.

Q☐ Insert Card #3 into slot #3.

7) Calibrate Card #5.

A☐ Connect the oscillator to the L INPUT terminals, high side to L INPUT +, low side to L INPUT −.

B☐ Insert the card extender into slot #5, then insert Card #5 into the card extender.

C☐ Set the AC POWER switch to ON.

All manuals and user guides at all-guides.com

D❑ Set the oscillator's frequency to 1kHz, and adjust its output level to produce −15.00dBu at Card #3's TP1.

E❑ Set the AC POWER switch to OFF.

F❑ Remove Card #3 from its slot.

G❑ Disconnect the audio voltmeter from TP1 on Card #3, and connect it to test point TP "K" on Card #3 (or to pin K on the edge connector).

H❑ Return Card #3 to slot #3.

I❑ Set the AC POWER switch to ON.

J❑ Set the COMPRESSOR switch to PROOF and allow the gain to settle for at least one minute.

K❑ Adjust MASTER GAIN CAL trimmer R501 on Card #5 to produce a reading of +2.00dBu (±0.20dBu) on the audio voltmeter.

L❑ Set the AC POWER switch to OFF.

M❑ Remove Card #3 from its slot.

N❑ Disconnect the audio voltmeter from TP "K" on Card #3, and connect it to test point TP1 on Card #3.

O❑ Return Card #3 to slot #3.

P❑ Set the AC POWER switch to ON.

Q❑ Set the oscillator's frequency to 35Hz, and adjust its output level to produce −15.00dBu at Card #3's TP1.

R❑ Set the AC POWER switch to OFF.

S❑ Remove Card #3 from its slot.

T❑ Disconnect the audio voltmeter from TP1 on Card #3, and connect it to test point TP "K" on Card #3 (or to pin K on the edge connector).

U❑ Return Card #3 to slot #3.

V❑ Set the AC POWER switch to ON.

W❑ Set the COMPRESSOR switch to PROOF and allow the gain to settle for at least one minute.

X❑ Adjust BASS GAIN CAL trimmer R514 on Card #5 to produce a reading of +2.00dBu (±0.20dBu) on the audio voltmeter.

Y❑ Set the AC POWER switch to OFF.

Z❑ Disconnect the oscillator and audio voltmeter from the 8101B.

all-guides.com

All manuals and user guides at all-guides.com

AA☐ Remove Card #5 from the card extender, remove the card extender from slot #5, then insert Card #5 into slot #5.

8) Calibrate Card #6. (part 1)

A☐ Remove Card #6 from the 8101B, insert the card extender into slot #6, then insert Card #6 into the card extender.

B☐ Verify that jumpers A and B on Card #7 are in the FLAT positions. If not, move them.

See Fig. 2-3 on page 2-6.

C☐ Set the AC POWER switch to ON.

D☐ Set the LIMITER switch to PROOF.

See OPT-022 note on page 4-11.

E☐ Turn FET BIAS trimmers R626 and R660 fully clockwise.

This guarantees that the FETs in IC603 will be fully pinched-off.

F☐ Connect the output of the tracking or sweep generator to the L INPUT terminals.

G☐ Connect the input of the spectrum analyzer or oscilloscope to the L OUTPUT + and ⏚ terminals.

H☐ Connect the audio voltmeter to the L OUTPUT terminals.

I☐ Adjust the LEFT OUTPUT ATTENUATOR to produce an audio voltmeter reading of about 0dBu.

The level is not critical. Adjust the spectrum analyzer or oscilloscope so the swept response can be easily seen.

J☐ Disconnect the audio voltmeter from the 8101B.

K☐ Set the VU meter selector to L FILTER OUT.

L☐ Set the tracking or sweep generator for a 0–20kHz sweep (2kHz/div). Set the generator's output level so the 8101B's VU meter does not exceed −6VU at 15kHz.

You may have to readjust the LEFT INPUT ATTENUATOR control if gain is insufficient. You are now sweeping the *entire* left channel of the 8101B audio system.

All manuals and user guides at all-guides.com

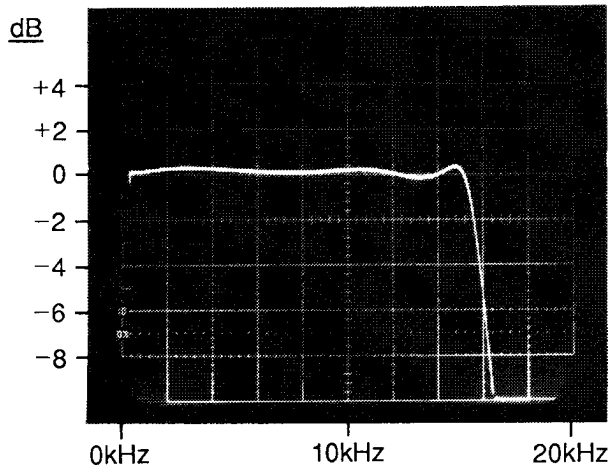

Fig. 4-1: Overall De-emphasized Response

M❑ Adjust PRE-EMPH trimmer R618 to achieve maximally flat response (±0.75dB or flatter from 50–15,000Hz), similar to that shown in Fig. 4-1.

> Because response below 3kHz may be affected by a misaligned Hilbert Transform Clipper on Card #0, base your adjustment primarily on the flatness of the response in the range 3–15kHz.

N❑ Turn FET BIAS trimmer R626 slowly counterclockwise until the swept response just begins to roll off. Back off until no rolloff is observed, and then go a little further for safety.

O❑ Disconnect the output of the tracking or sweep generator from the L INPUT terminals, and connect it to the R INPUT terminals.

P❑ Disconnect the input of the spectrum analyzer or oscilloscope from the L OUTPUT + terminal, and connect it to the R OUTPUT + terminal.

Q❑ Set the VU meter selector to R FILTER OUT.

R❑ Set the tracking or sweep generator for a 0–20kHz sweep (2kHz/div). Set the generator's output level so the 8101B's VU meter does not exceed −6VU at 15kHz.

> You may have to readjust the RIGHT INPUT ATTENUATOR control if gain is insufficient. You are now sweeping the *entire* right channel of the 8101B audio system.

S❑ Adjust PRE-EMPH trimmer R652 to achieve maximally flat response (±0.75dB or flatter from 50–15,000Hz), similar to that shown in Fig. 4-1.

> Because response below 3kHz may be affected by a misaligned Hilbert Transform Clipper on Card #1, base your adjustment primarily on the flatness of the response in the range 3–15kHz.

T❑ Turn FET BIAS trimmer R660 slowly counterclockwise until the swept response just begins to roll off. Back off until no rolloff is observed, and then go a little further for safety.

U❑ Disconnect the tracking or sweep generator and the spectrum analyzer or oscilloscope from the 8101B.

All manuals and user guides at all-guides.com

9) Calibrate Card #6. (part 2)

A☐ Connect the THD analyzer to pin 1 of IC605 on Card #6 (or to pin J of the card connector).

B☐ Connect the oscillator to the L INPUT terminals. Set the oscillator's frequency to 10kHz, and adjust its output level to produce +10dBu at pin 1 of IC605.

C☐ Set the LIMITER switch to OPERATE.

The 10kHz level should go down to approximately +6dBu.

D☐ Adjust DIST NULL trimmer R631 to minimize THD.

Bear in mind that you are observing a pre-emphasized signal, and that THD will be lower still after de-emphasis. Even without de-emphasis, THD is typically less than 0.1%.

E☐ Disconnect the THD analyzer from pin 1 of IC605 (or pin J of the card connector), and connect it to pin 1 of IC611a (or pin S of the card connector).

F☐ Disconnect the oscillator from the L INPUT terminals, and connect it to the R INPUT terminals.

Don't change the oscillator's output level.

G☐ Adjust DIST NULL trimmer R665 to minimize THD.

H☐ Set the LIMITER switch to PROOF.

See OPT-022 note on page 4-11.

I☐ Set the oscillator's frequency to 10kHz, and adjust its output level to produce +10dBu at pin 1 of IC611a.

J☐ Set the LIMITER switch to OPERATE.

The 10kHz level should go down to approximately +6dBu.

K☐ Disconnect the THD analyzer from the 8101B.

L☐ Connect a high-impedance (10-megohm or greater) digital voltmeter to the junction of resistors R669 and R670 on Card #6.

M☐ Adjust OVERSHOOT COMPENSATOR THRESHOLD trimmer R671 to produce a reading of +4.50VDC ±0.05V on the digital voltmeter.

N☐ Set the AC POWER switch to OFF.

O☐ Remove Card #6 from the card extender, remove the card extender from the 8101B, then insert Card #6 into slot #6.

P☐ Disconnect the oscillator from the 8101B.

All manuals and user guides at all-guides.com

10) Calibrate Card #0. (part 1)

A❑ Remove Card #0, insert the card extender into slot #0, then insert Card #0 into the card extender.

B❑ Set the AC POWER switch to ON.

C❑ Connect the oscillator to the L INPUT terminals. Set the oscillator's frequency to 1kHz.

D❑ Connect the audio voltmeter to pin Z of the card connector on Card #0.

E❑ Increase the oscillator's output level until the audio voltmeter reading no longer increases.

> The meter reading will stop increasing when the limiting threshold of the Hilbert Transform Clipper is reached.

F❑ Adjust RATIO trimmer R69 on Card #0 until the audio voltmeter reading remains constant while the oscillator's output level is varied between the Hilbert Transform Clipper's limiting threshold and about 5dB above that threshold.

> Each adjustment of R69 will change the level at pin Z. Therefore, adjust R69 *slightly* and then vary the oscillator's output through the indicated 5dB range while looking for level changes.

G❑ Reduce the oscillator's output to the exact threshold of limiting.

H❑ Disconnect the audio voltmeter from pin Z, and connect it to pin X of the Card #0 connector.

I❑ Verify that the level at pin X is +6.2dBu ±0.5dBu.

J❑ Set the LIMITER switch to PROOF.

> See OPT-022 note on page 4-11.

K❑ Adjust the oscillator's output level to produce a level of +6dBu at pin X.

L❑ Connect the THD analyzer to pin Z of the Card #0 connector.

M❑ Adjust HF DIST NULL trimmer R25 on Card #0 to minimize the THD observed at pin Z.

N❑ Disconnect the audio voltmeter from pin X, and connect it to pin Z of the Card #0 connector.

O❑ Adjust GAIN trimmer R50 on Card #0 to produce a level of +7.0dBu at pin Z.

P❑ Disconnect the THD analyzer from pin Z, and connect it to pin Y of the Card #0 connector.

Q❑ Adjust LF DIST NULL trimmer R44 on Card #0 to minimize the THD observed at pin Y.

R❑ Adjust LF RESPONSE trimmer R52 on Card #0 to produce a level of +11.4dBu at pin Y.

All manuals and user guides at all-guides.com

11) Calibrate Card #0. (part 2)

A❑ Disconnect the oscillator from the L INPUT terminals, and connect it to the side of resistor R56 that is closest to RIPPLE NULL trimmer R61.

B❑ Set the oscillator's frequency to 100Hz, and adjust its output level to 1VRMS.

C❑ Disconnect the audio voltmeter from pin Y, and connect it to pin Z of the Card #0 connector.

D❑ Adjust HF THUMP NULL trimmer R18 on Card #0 to minimize the 100Hz signal observed at pin Z.

E❑ Disconnect the audio voltmeter from pin Z, and connect it to pin Y of the Card #0 connector.

F❑ Adjust LF THUMP NULL trimmer R38 on Card #0 to minimize the 100Hz signal observed at pin Y.

G❑ Set the LIMITER switch to OPERATE.

H❑ Disconnect the oscillator from R56, and connect it to the 8101B's L INPUT terminals.

I❑ Disconnect the audio voltmeter from pin Y, and connect it to pin Z of the Card #0 connector.

J❑ Set the oscillator's frequency to 2kHz, and set its output level about 5dB above the Hilbert Transform Clipper's threshold of limiting.

The meter reading will stop increasing when the limiting threshold of the Hilbert Transform Clipper is reached.

K❑ Connect the THD analyzer to pin Z of the Card #0 connector.

L❑ Adjust RIPPLE NULL trimmer R61 on Card #0 to minimize the THD observed at pin Z.

0.6% THD is typical.

M❑ Verify that the level at pin Z is +7.2dBu ±0.5dBu.

N❑ Set the AC POWER switch to OFF.

O❑ Remove Card #0 from the card extender, remove the card extender from the 8101B, then insert Card #0 into slot #0.

P❑ Disconnect the oscillator, THD analyzer, and audio voltmeter from the 8101B.

all-guides.com

All manuals and user guides at all-guides.com

12) Calibrate Card #1. (part 1)

A☐ Remove Card #1, insert the card extender into slot #1, then insert Card #1 into the card extender.

B☐ Set the AC POWER switch to ON.

C☐ Connect the oscillator to the R INPUT terminals. Set the oscillator's frequency to 1kHz.

D☐ Connect the audio voltmeter to pin Z of the card connector on Card #1.

E☐ Increase the oscillator's output level until the audio voltmeter reading no longer increases.

> The meter reading will stop increasing when the limiting threshold of the Hilbert Transform Clipper is reached.

F☐ Adjust RATIO trimmer R69 on Card #1 until the audio voltmeter reading remains constant while the oscillator's output level is varied between the Hilbert Transform Clipper's limiting threshold and about 5dB above that threshold.

> Each adjustment of R69 will change the level at pin Z. Therefore, adjust R69 *slightly* and then vary the oscillator's output through the indicated 5dB range while looking for level changes.

G☐ Reduce the oscillator's output level to the exact threshold of limiting.

H☐ Disconnect the audio voltmeter from pin Z, and connect it to pin X of the Card #1 connector.

I☐ Verify that the level at pin X is +6.2dBu ±0.5dBu.

J☐ Set the LIMITER switch to PROOF.

> See OPT-022 note on page 4-11.

K☐ Adjust the oscillator's output level to produce a level of +6dBu at pin X.

L☐ Connect the THD analyzer to pin Z of the Card #1 connector.

M☐ Adjust HF DIST NULL trimmer R25 on Card #1 to minimize the THD observed at pin Z.

N☐ Disconnect the audio voltmeter from pin X, and connect it to pin Z of the Card #1 connector.

O☐ Adjust GAIN trimmer R50 on Card #1 to produce a level of +7.0dBu at pin Z.

P☐ Disconnect the THD analyzer from pin Z, and connect it to pin Y of the Card #1 connector.

Q☐ Adjust LF DIST NULL trimmer R44 on Card #1 to minimize the THD observed at pin Y.

R☐ Adjust LF RESPONSE trimmer R52 on Card #1 to produce a level of +11.4dBu at pin Y.

All manuals and user guides at all-guides.com

13) Calibrate Card #1. (part 2)

A☐ Disconnect the oscillator from the R INPUT terminals, and connect it to the side of resistor R56 that is closest to RIPPLE NULL trimmer R61.

B☐ Set the oscillator's frequency to 100Hz, and adjust its output level to 1VRMS.

C☐ Disconnect the audio voltmeter from pin Y, and connect it to pin Z of the Card #1 connector.

D☐ Adjust HF THUMP NULL trimmer R18 on Card #1 to minimize the 100Hz signal observed at pin Z.

E☐ Disconnect the audio voltmeter from pin Z, and connect it to pin Y of the Card #1 connector.

F☐ Adjust LF THUMP NULL trimmer R38 on Card #1 to minimize the 100Hz signal observed at pin Y.

G☐ Set the LIMITER switch to OPERATE.

H☐ Disconnect the oscillator from R56, and connect it to the 8101B's L INPUT terminals.

I☐ Disconnect the audio voltmeter from pin Y, and connect it to pin Z of the Card #1 connector.

J☐ Set the oscillator's frequency to 2kHz, and set its output level about 5dB above the Hilbert Transform Clipper's threshold of limiting.

The meter reading will stop increasing when the limiting threshold of the Hilbert Transform Clipper is reached.

K☐ Connect the THD analyzer to pin Z of the Card #1 connector.

L☐ Adjust RIPPLE NULL trimmer R61 on Card #1 to minimize the THD observed at pin Z.

0.6% THD is typical.

M☐ Verify that the level at pin Z is +7.2dBu ±0.5dBu.

N☐ Set the AC POWER switch to OFF.

O☐ Remove Card #1 from the card extender, remove the card extender from the 8101B, then insert Card #1 into slot #1.

P☐ Disconnect the oscillator, THD analyzer, and audio voltmeter from the 8101B.

14) Calibrate Card #8.

A☐ Remove Card #8, insert the card extender into slot #8, then insert Card #8 into the card extender.

All manuals and user guides at all-guides.com

B❑ Set the AC POWER switch to ON.

C❑ Set the LIMITER switch to PROOF.

See OPT-022 note on page 4-11.

D❑ Connect the audio voltmeter to pin M of the Card #8 connector.

E❑ Connect the oscillator to the 8101's L INPUT terminals. Set the oscillator's frequency to 100Hz, and adjust its output level to produce a level of −3.9dBu at pin M.

F❑ Disconnect the audio voltmeter from pin M, and connect it to pin X of the Card #8 connector.

G❑ Adjust SAFETY CLIPPER THRESHOLD trimmer R841 to produce a level of 0dBu at pin X.

This sets a standard gain of +3.9dB through the card.

H❑ Disconnect the oscillator and audio voltmeter from the 8101B.

15) Verify performance of Card #8.

This step verifies Card #8 operation, and is optional. If you wish to skip this verification, go to step 16 on page 4-34.

A❑ Connect the output of the tracking generator to test point TP1 on Card #8. Set the generator for a 20–20,000Hz log sweep.

You must use a spectrum analyzer to verify the calibration of Card #8 — the sweep generator and oscilloscope combination can not be used here.

B❑ Connect the input of the spectrum analyzer to the L AUDIO TEST JACK (J1).

C❑ Verify that the swept response looks like that shown in Fig. 4-2.

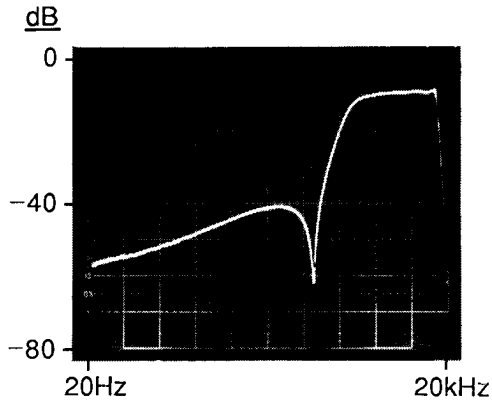

Fig. 4-2: Card #8/#9 Bandpass Filter Response
(see steps 15-C and 17-C)

All manuals and user guides at all-guides.com

Fig. 4-2 shows the response of the 2.2–15kHz bandpass filter that is created by subtracting the output of the 2.2kHz low-pass filter from the output of the 15kHz low-pass filter. Note the high amount of rejection below 2.2kHz, and the very steep slope at 2.2kHz.

If this swept response does not resemble that shown in Fig. 4-2, there is a fault in either the filters or phase correctors between the card input and the output of IC803b (left channel) or IC903b (right channel). This test is both fast and sensitive because accurate cancellation demands accurate matching of the phase and amplitude responses of both the phase-corrected 15kHz low-pass filter and the 2.2kHz low-pass filter. If *any* circuitry is faulty, the cancellation will not occur accurately.

D☐ Disconnect the tracking generator and spectrum analyzer from the 8101B.

E☐ Set the AC POWER switch to OFF.

F☐ Remove Card #6 from its slot.

G☐ Set the AC POWER switch to ON.

H☐ On Card #8, verify that the clipper bias is approximately +1.5V DC at pin 1 of IC808, and approximately −1.5V DC at pin 7 of IC808.

The temperature-compensation circuitry will cause these bias voltages to change slightly with temperature to keep the clipping threshold constant.

I☐ Set the AC POWER switch to OFF.

J☐ Return Card #6 to slot #6.

K☐ Set the AC POWER switch to ON.

L☐ Set the LIMITER switch to OPERATE.

M☐ Connect the oscilloscope to the L AUDIO TEST JACK (J1).

N☐ Connect the oscillator to pin R of the Card #8 connector. Set the oscillator's frequency to 100Hz, and increase its output level until clipping is just barely observed on the oscilloscope.

If clipping does not occur, the FCS Overshoot Compensator is faulty.

O☐ Verify that the oscillator's output level is approximately 0.63VRMS.

P☐ Increase the oscillator's output by 4dB, and sweep the oscillator's frequency up from 100Hz to 6kHz. Verify proper waveform and the frequency of the peak level.

All manuals and user guides at all-guides.com

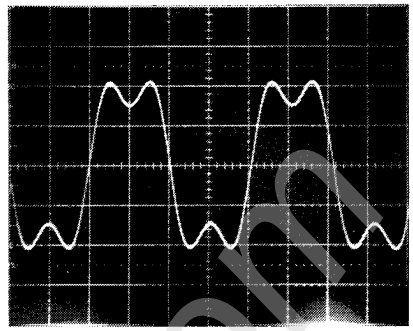

Fig. 4-3: 4.4kHz Overdriven FCS Overshoot Compensator Output (see steps 15-P and 17-P)

The peak level of the output waveform should never exceed the clipping plateau by more than 0.7dB. This 0.7dB peak should occur at approximately 4.4kHz. The waveform at 4.4kHz should resemble a filtered square wave with two equal cycles of ringing on the top and bottom of the wave (see Fig. 4-3).

If substantially more than 0.7dB overshoot occurs (especially if the ringing is not symmetrical), suspect problems in the filters or phase-shift networks associated with the FCS Overshoot Corrector.

Q☐ Disconnect the oscillator and oscilloscope from the 8101B.

16) Calibrate Card #9.

A☐ Set the AC POWER switch to OFF.

B☐ Remove Card #8 from the card extender, and set it aside.

C☐ Remove Card #9, then insert Card #9 into the card extender.

Because Cards #8 and #9 are interchangeable, you can leave the extender in slot #8.

D☐ Set the AC POWER switch to ON.

E☐ Set the LIMITER switch to PROOF.

See OPT-022 note on page 4-11.

F☐ Connect the audio voltmeter to pin M of the Card #9 connector.

G☐ Connect the oscillator to the 8101's R INPUT terminals. Set the oscillator's frequency to 100Hz, and adjust its output level to produce a level of −3.9dBu at pin M.

H☐ Disconnect the audio voltmeter from pin M, and connect it to pin X of the Card #9 connector.

all-guides.com

All manuals and user guides at all-guides.com

I❑ Adjust SAFETY CLIPPER THRESHOLD trimmer R941 to produce a level of 0dBu at pin X.

This sets a standard gain of +3.9dB through the card.

J❑ Disconnect the oscillator and audio voltmeter from the 8101B.

17) Verify performance of Card #9.

This step verifies Card #9 operation, and is optional. If you wish to skip this verification, go to step 18 on page 4-36.

A❑ Connect the output of the tracking generator to test point TP1 on Card #9. Set the generator for a 20–20,000Hz log sweep.

You must use a spectrum analyzer to verify the calibration of Card #9 — the sweep generator and oscilloscope combination can not be used here.

B❑ Connect the input of the spectrum analyzer to the R AUDIO TEST JACK (J2).

C❑ Verify that the swept response looks like that shown in Fig. 4-2.

D❑ Disconnect the tracking generator and spectrum analyzer from the 8101B

E❑ Set the AC POWER switch to OFF.

F❑ Remove Card #6 from its slot.

G❑ Set the AC POWER switch to ON.

H❑ On Card #9, verify that the clipper bias is approximately +1.5V DC at pin 1 of IC908, and approximately −1.5V DC at pin 7 of IC908.

The temperature-compensation circuitry will cause these bias voltages to change slightly with temperature to keep the clipping threshold constant.

I❑ Set the AC POWER switch to OFF.

J❑ Return Card #6 to slot #6.

K❑ Set the AC POWER switch to ON.

L❑ Set the LIMITER switch to OPERATE.

M❑ Connect the oscilloscope to the R AUDIO TEST JACK (J2).

N❑ Connect the oscillator to pin R of the Card #9 connector. Set the oscillator's frequency to 100Hz, and increase its output level until clipping is just barely observed on the oscilloscope.

If clipping does not occur, the FCS Overshoot Compensator is faulty.

O❑ Verify that the oscillator's output level is approximately 0.63VRMS.

All manuals and user guides at all-guides.com

P❑ Increase the oscillator's output by 4dB, and sweep the oscillator's frequency up from 100Hz to 6kHz. Verify proper waveform and the frequency of the peak level.

See Fig. 4-3 and the note at step 15-P.

Q❑ Disconnect the oscillator and oscilloscope from the 8101B.

18) Return OPTIMOD-FM to service.

A❑ Disconnect all test instruments from the 8101B.

B❑ Set the AC POWER switch to OFF.

C❑ Remove Card #9 from the card extender, remove the card extender from the 8101B, then insert Card #9 into slot #9.

D❑ Insert Card #8 into slot #8.

E❑ Remove the jumper(s) connecting the 8101B's ⏚ and ⏚ terminals — unless it is normally present in your installation.

F❑ If jumpers A and B on Card #7 were repositioned in step 8-B, return them to the positions appropriate for normal operation in your installation.

See Fig. 2-3 on page 2-6. DO NOT move the jumpers if they were already in the FLAT position before calibration.

G❑ If the 8100A/XT2 Six-Band Limiter was disconnected in step 1, remove Cards #0 and #1 from the 8101B, return jumpers on the 8101B's Cards #5, #6, #8, and #9 to the WITH XT2 positions and reconnect the 8100A/XT2 to the 8101B.

See step 16 on page 2-17. Move jumpers A, B, and C on Card #5, jumper A on Card #6, and jumpers A and B on Cards #8 and #9.

H❑ Set the AC POWER switch to ON.

I❑ Replace the subpanel and close front panel.

See page 4-5 for instructions.

J❑ Return controls to the settings recorded in step 1.

K❑ Return the 8101B to its rack and reconnect it.

All manuals and user guides at all-guides.com

Section 5 Troubleshooting

page contents

5-2 Troubleshooting the 8101B

5-6 Fig. 5-1: Test Jumper, Card #6

5-13 Components: Fault Diagnosis, Replacement

5-15 Technical Support

5-15 Factory Service, Shipping Instructions

CAUTION

The installation and servicing instructions in this manual are for use by qualified personnel only. To avoid electric shock do not perform any servicing other than that contained in the Operating Instructions unless you are qualified to do so. Refer all servicing to qualified service personnel.



All manuals and user guides at all-guides.com

Troubleshooting the 8101B

Many problems experienced in the field can be resolved or conclusively diagnosed with the following procedures. Even if the repair cannot be done in the field, the information provided by these diagnostic routines will facilitate speedy assistance by Customer Service and, if necessary, repairs by the factory.

Please follow these troubleshooting instructions and make notes if you observe anything exceptional or unusual.

- See "Getting Inside the Chassis" on page 4-4 for instructions on opening up the unit, removing the subpanel, and getting to the less accessible parts of the interior. See the assembly drawings in Section 6 for locations of components and test points.
- Always turn off AC power to the 8101B before removing or inserting circuit cards. Allow the 8101B to stabilize for two minutes after turning the power back on.
- Before troubleshooting at the component level or replacing components, see "Components: Fault Diagnosis, Replacement" on page 5-13.

The following instructs you to first determine that the problem is with the 8101B and not with some other piece of equipment. The troubleshooting procedure then progresses through checking the power supply, isolating the faulty circuit with the VU meter, and checking individual circuit cards.

After performing step 1, proceed to the indicated step if you observe any of the following symptoms.

If the problem is:	See step:	On page:
Whistle on air	7	5-6
Buzz or hum	8	5-7
Loss of modulation control	9	5-7
Bass balance	10	5-8
High-frequency response	11	5-8
Subtle to moderate distortion	12	5-9
Gross distortion	13	5-10
Sibilance	14	5-11
Abnormal GATE light behavior	15	5-11
Pumping	16	5-11
Lost keys	Security	1-10

All manuals and user guides at all-guides.com

1) Determine if the problem is caused by the 8101B, and not by other equipment.

A❑ Check the audio signal going into the 8101B.

If a standby audio processor is available, substitute it for the 8101B to see if the problem vanishes. If a standby unit is not available, check the audio quality at the 8101B's INPUT terminals with a high-quality monitor system.

Even slight distortion can be greatly exaggerated by processing. So, although relatively minor problems which develop in the station's audio chain or STL can be magnified by 8101B, such distortion does not necessarily indicate that the 8101B is in any way defective. *Always be sure that the problem is not in the source material being fed to the 8101B.*

B❑ Check the audio signal coming out of the 8101B.

If the audio is clean going into the 8101B, check the equipment downstream from the 8101B. If a standby exciter and stereo coder are available, substitute it to see if the problem vanishes. If no standby equipment is available, connect the audio output of the 8101B directly into a high-quality amplifier and loudspeaker to see if the problem can still be heard. If the problem vanishes when you observe the output of the 8101B directly, then downstream equipment is strongly suspect. If the problem does not go away, verify that the problem is not in the monitoring amplifier or loudspeaker by listening to the 8101B's output on another monitor.

In countries where government broadcasting authorities own the transmitters, the 8101B operator may not have access to the transmitter hardware. In our experience, particularly intractable problems can be introduced by these transmitters and their protection limiters. Beyond carefully adjusting 8101B output levels so that the transmitter's protection limiter is rarely (or never) activated, there may be nothing the 8101B operator can do to correct such system problems. These problems can occur even when steady-state (sine-wave) measurements indicate that the system is meeting specifications, because steady-state measurements do not assess dynamic effects — particularly those in the transmitter's protection limiter.

C❑ Check grounding.

Changes in or deterioration of grounding and/or exterior lead dress can sometimes cause RFI or hum problems to appear in a correctly-operating 8101B.

If the fault has been positively isolated to the 8101B, continue with this fault localization routine.

The following troubleshooting procedures employ the technique of *signal tracing*: the signal is observed at various points as it passes from the input to the output. If the signal is normal at one point in the circuit, but is abnormal at another point nearer the output, the problem lies in circuitry between the two points. Signal tracing is facilitated because much of the 8101B's circuitry is duplicated for stereo, and is arranged so that one channel can be readily compared with the other.

All manuals and user guides at all-guides.com

2) Check the power supply.

A☐ *If you are getting hum or buzz*, set the 8101B's VU meter selector to +15 VDC, and verify that the VU meter reads 0VU ±0.5VU.

B☐ Set the 8101B's VU meter selector to −15 VDC, and verify that the VU meter reads 0VU ±0.5VU.

If both readings are as expected, skip to step 3.

If either reading is significantly low, it could indicate a defect in the supply itself, but it is more likely that a shorted IC or capacitor somewhere in the circuit is overloading the supply and causing it to current-limit. (The power supply is electronically protected against excessive current demand by other parts of the circuitry. If a failure causes a high current demand on the power supply, its output voltage will drop as far as necessary to reduce output current to approximately 0.75A.)

C☐ *If the VU meter readings are abnormally low*, unplug each circuit card in turn and check if the VU meter recovers to 0VU.

Leave the VU meter selector set to −15 VDC. Since the negative regulator tracks the +15V supply, the −15V supply will go down if the +15V supply does, even if the −15V supply or load is completely normal. A normal −15 VDC reading thus assures a normal +15 VDC reading.

If recovery occurs, troubleshoot the unplugged circuit card (see page 5-13). Ordinarily, the defective component will become *very hot*, and so be easily detected by touch. But be careful: wet your finger first to avoid burns!

If the VU meter reading does not recover, examine the meter card, motherboard, and chassis wiring before suspecting the power supply itself. Very low resistance (measured with AC power off) between circuit ground and the +15V supply or between circuit ground and the −15V supply indicates a wiring problem.

D☐ If the unit passes the above tests, use a well-calibrated DVM, oscilloscope, and audio voltmeter (with 20–20,000Hz bandpass filter) to verify that the +15-volt supply is +15.00V ±0.075V, that the −15-volt supply is −15.00V ±0.075V, that ripple is less than 2mV RMS peak from 20–20,000Hz, and that there is no high-frequency oscillation.

The 15-volt supplies can be most easily measured by extending a circuit card. +15V is available at pin B of the card connector, −15V is available at pin E, and circuit ground is available at pin C.

If power supply passes these tests, continue with step 3.

3) Isolate the faulty circuit with the 8101B's VU meter.

A☐ Feed typical audio to the 8101B.

B☐ Set the 8101B's VU meter selector to each position and verify that the reading is normal for that position.

All manuals and user guides at all-guides.com

Check readings in the order given below. If a reading is abnormal, check the circuit card indicated in this chart. Compare the various VU meter readings with the readings you have typically observed in normal operating conditions.

The block diagram and schematics in Section 6 indicate exactly where in the circuitry each VU meter reading is taken. (Note that problems other than gross gain changes or total failure to pass signal may not be detected by the meter alone.)

If normal at:	But abnormal at:	Check:
AUDIO IN terminals (checked in step 1)	L INPUT BUFFER	Card #3 or incoming audio circuitry
AUDIO IN terminals (checked in step 1)	R INPUT BUFFER	Card #4 or incoming audio circuitry
L INPUT BUFFER	L COMPR OUT	Card #3
R INPUT BUFFER	R COMPR OUT	Card #4
(if R and L COMPR OUT readings are both abnormal, suspect Card #5)		
L COMPR OUT	L FILTER OUT	Card #0, #6, or #8
R COMPR OUT	R FILTER OUT	Card #1, #6, or #9
L FILTER OUT	L SYSTEM OUT	Card #7
R FILTER OUT	R SYSTEM OUT	Card #7

4) If Card #0, #1, #3, #4, #8, or #9 is suspect, swap pairs of cards between channels to localize the problem.

Cards #0 and #1 are identical, as are Cards #3 and #4, and Cards #8 and #9 — the lower numbered card of each pair is part of the left channel circuitry, the other is part of the right channel. Swap the suspected pair. If the problem moves from one channel to the other, the problem is with the card that corresponds to the faulty channel. If not, suspect Card #6 (which processes audio for both channels). Once the fault is localized to a specific circuit card, see the component-level troubleshooting information on page 5-13 — or contact Orban Customer Service (see page 5-15).

If either **Card #0 or #1** is faulty, *both* can be bypassed without serious compromise of audio quality (there might be a slight increase in clipping distortion on low-quality feeds, but turning the CLIPPING control down should correct this). To bypass Cards #0 and #1 for servicing:

A❑ Remove *both* Card #0 and Card #1 from the 8101B.

Removing just one of these cards would result in severe phase cancellations in the mono sum.

B❑ Move jumper A on Card #6 to the WITH XT2 position. See Fig. 2-7 shown on page 2-19.

C❑ Remove jumper B and place it on jumper C in the NORMAL position. See Fig. 5-1 on page 5-6.

D❑ Move jumpers A on Cards #8 and #9 to the WITH XT2 positions shown in Fig. 2-8 on page 2-19.

E❑ Confirm that jumpers B on Cards #8 and #9 are in the WITHOUT XT2 position shown in Fig. 2-8 on page 2-19.

All manuals and user guides at all-guides.com

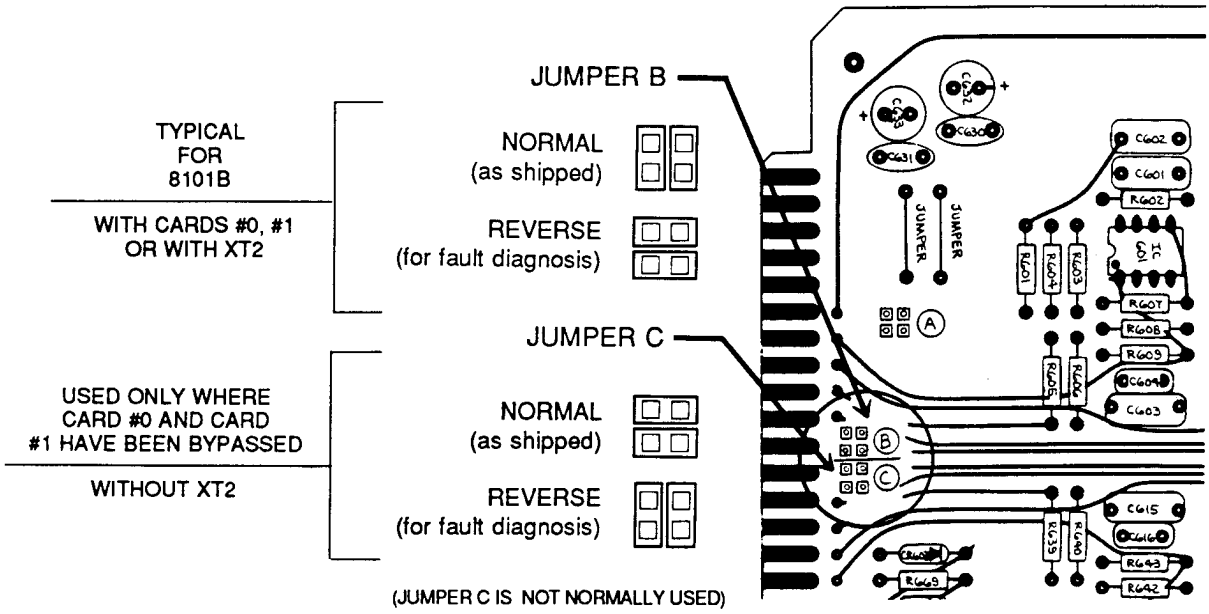

Fig. 5-1: Test Jumper, Card #6

5) If Card #6 is suspect, move test jumper.

A☐ Move jumper B on Card #6 to the REVERSE position.

Jumper C is normally not in place unless Card #0 and Card #1 have been bypassed for some reason. If jumper C is in place, but not jumper B, substitute jumper C in the text for this step.

See Fig. 5-1. If the problem moves from one channel to the other, Card #6 is probably faulty. The "Field Audit of Performance" on page 4-11 may provide additional information — excessive THD at 3kHz in the OPERATE mode distortion test can be caused by a failure in the high-frequency limiter on Card #6.

B☐ Return jumper B or C on Card #6 to the WITHOUT XT2 position.

6) If any other card is suspect, do the "Field Audit of Performance" on page 4-11. Record the results of each test.

7) If you hear on-air whistle:

A☐ Check the power supply.

See step 2. Capacitors C111 or C112, or chips IC101 or IC102 on Card #PS are most likely to be at fault.

B☐ If the whistle is on one channel only, suspect an oscillating IC.

Steps 3 through 6 will help isolate the defective IC.

All manuals and user guides at all-guides.com

8) If you hear buzz or hum:

A❑ Check the power supply.

See step 2. Low line voltage an cause the regulator to drop out and pass ripple. Failure of capacitors C101 or C102 in the unregulated power supply could result in extremely high ripple (the power supply regulator will drop out on each ripple cycle which dips below 17.5 volts).

B❑ Check for improper grounding.

Verify that the 8101B is properly grounded to its rack.

In a high-RFI environment, you may need to improve the grounding scheme, relocate the 8101B chassis, or change the length of input or output cables to re-tune them.

C❑ If you are running balanced inputs, verify that there is a direct connection between the 8101B's circuit ground and the stereo coder's circuit ground.

9) If modulation control is lost:

A❑ Make sure the LIMITER switch is set to OPERATE.

B❑ Verify that the peak levels at the 8101B's TEST JACKS are tightly controlled.

If they are, the 8101B is probably not at fault. Check the equipment downstream of the 8101B: the stereo coder, STL, and exciter.

Inadequate phase linearity and/or frequency response in the circuit path *after* the 8101B can change peak levels, which can result in overshoots and loss of modulation control. This problem should appear immediately upon installation.

If the circuit path is not the problem, check the FCS Overshoot Compensator circuitry on Cards #8 and #9 (IC804, IC805, IC904, IC905 and associated components). If that circuit is defective and can not be fixed by replacing ICs, obtain factory service — see page 5-15. (Factory service is recommended because filter and phase shift networks characteristics must be maintained to close tolerances if the circuit is to accurately control peaks, and because some of this circuitry is contained in sealed module A1.)

C❑ Check clipper-diode bias supplies.

See step 13-D on page 5-10.

All manuals and user guides at all-guides.com

10) If on-air bass balance seems incorrect:

A❑ Adjust the BASS COUPLING control.

When the 8101B's BASS COUPLING control is set toward INDEPENDENT, it is normal for bass to be accentuated on many different types of program material. If you want the frequency balance of "air" and "program" to be essentially identical, set the BASS COUPLING control closer to WIDEBAND (see "Spectral balance" on page 3-9 for more information).

B❑ Check the Card #5 circuitry associated with IC501, IC502, IC506, and IC507.

See step 2 on page 4-13 for PROOF mode frequency response test. The PROOF mode tests may also reveal a failure in the input conditioning filter on Card #3 or #4. If frequency response is non-flat even when the COMPRESSOR switch is set to PROOF, it is possible that the exponential converter circuitry for either the master or bass band compressors is misaligned or has failed.

C❑ If gain shift is noted, check the master and bass band VCAs for failure.

11) If there is insufficient high-frequency response:

A❑ If the CLIPPING control is set near MORE and the RELEASE TIME control is set near FAST, back off these controls for more highs.

The pre-emphasis curve makes some high-frequency loss inevitable when the 8101B is operated aggressively with large amounts of clipping and a fast release time.

B❑ If the BASS COUPLING control is set near INDEPENDENT, try setting the BASS COUPLING control toward WIDEBAND to see if the highs are then balanced like the input material.

With the BASS COUPLING control set near INDEPENDENT, the increased bass response on some program material may cause an *apparent* loss of highs.

C❑ If FET BIAS trimmer R626 (left channel) or R660 (right channel) on Card #6 is misadjusted so that IC603a (left channel) or IC603b (right channel) is always on, align it.

Such misalignment will partially defeat the pre-emphasis. See page 4-17 for alignment instructions.

D❑ Check IC605b, IC607 (left channel) and IC611b, IC612 (right channel) on Card #6 — is either channel's high-frequency limiter working too hard?

Drive both channels with identical mono source. If one channel produces excessive high-frequency limiting compared to the other, the corresponding chips may be faulty.

all-guides.com

All manuals and user guides at all-guides.com

12) If you hear moderate to subtle distortion:

A❑ Make sure that the distortion is not being caused by the program material itself, or by other components in the audio chain (including the STL).

See step 1. For a discussion about maintaining audio quality in the FM plant, see *Audio Quality in the FM Plant* (a separate Orban publication included with each FM unit).

B❑ If the distortion is more moderate than subtle, check the possible causes of gross distortion given in step 13.

C❑ Check that the 8101B's CLIPPING control is properly set (see Section 3 for information on control settings).

D❑ Check the standard level.

See step 3 on page 4-2.

If the 8101B fails to produce the standard level, suspect failure of rectifiers IC503a, IC503b, IC504, IC505, IC508a, IC508b, IC509, or IC510, or of the timing modules A1 and A2 on Card #5. A failure in Card #5 can manifest itself on both channels as distortion (too little gain reduction), low loudness (too much gain reduction), and pumping or other dynamic problems (failure in the timing circuitry).

E❑ If the high end is gritty with severe sibilance splatter, check for failure in the distortion-canceling filter on Card #8 or #9.

F❑ If the distortion is primarily second-harmonic distortion, check the alignment of DIST NULL trimmers R25 and R44 on Cards #0 or #1, and R336 and R351 on Cards #3 and #4.

See page 4-17 for alignment instructions. (Note, however, that this type of distortion may actually sound pleasing with some types of program material.)

G❑ Check the alignment of the SAFETY CLIPPER THRESHOLD trimmers R841 on Card #8 and R941 on Card #9.

See step 14 on page 4-31 and step 16 on page 4-34. These trimmers are not likely to drift from their factory settings — but humans with alignment tools sometimes do strange things.

H❑ If the L–R signal does not null when both channels of the 8101B are driven by identical mono material, check the phase correctors on Cards #6, #8, or #9.

Some phase corrector failures can grossly change the phase response of a given channel without significantly affecting the frequency response. While each channel sounds normal by itself, the mono sum will exhibit significant frequency response aberrations due to phase cancellations.

A monitor amplifier with a balanced input provides an easy way to listen to the difference signal: connect the 8101B's L OUTPUT + terminal to the amplifier's + input; connect the 8101B's R OUTPUT + terminal to the amplifier's – input. (You could also connect headphones between the 8101B's L OUTPUT + and R OUTPUT + terminals.)

If phase corrector failure is suspected, drive both channels of the 8101B with identical, bright program material (drive both channels in parallel

All manuals and user guides at all-guides.com

from a single source; do not use stereo material because the usual differences between channels can totally mask any differences caused by phase corrector failure). Listen carefully to the type of distortion produced.

If one channel sounds slightly more gritty on program material with a lot of high-frequency energy, suspect a phase corrector failure on Card #6 (which would cause slightly more high-frequency clipping).

If one channel exhibits sibilance distortion (splattered "ess" sounds on voices), suspect a phase corrector failure on Card #8 or #9 — that would cause the distortion cancellation to work incorrectly. If the problem is heard in the left channel, Card #8 is suspect; if the problem is in the right channel, Card #9 is the culprit.

If aliasing distortion is heard when the signal is decoded in a stereo receiver, suspect a phase corrector failure in the FCS Overshoot Compensator on Card #8 or #9 (which would cause inaccurate overshoot cancellation, thus overdriving the safety clipper when significant high-frequency energy is present, resulting in the generation of out-of-band frequency components). To determine which channel is faulty, drive one channel at a time with bright program material. Listen to the undriven channel as decoded by your stereo monitor. If driving the left channel results in notably more "garbage" in the undriven right channel than driving the right channel causes in the undriven left channel, Card #8 is suspect; if the reverse is true, suspect Card #9.

If a phase corrector is defective and can not be fixed by replacing an IC, obtain factory service (see page 5-15). Factory service is recommended because filter and phase shift networks characteristics must be maintained to close tolerances if the circuit is to accurately control peaks, and some of this circuitry is contained in sealed modules.

13) If you hear gross distortion:

A❑ Check the power supply.

See step 2 for power supply tests.

B❑ Look for IC opamp failure by tracing the signal.

C❑ Check IC601, IC602b, IC604, IC608a, IC609b, IC610 (on Card #6), IC802a, IC802b, IC803a, IC804a, IC804b (on Card #8), IC902a, IC902b, IC903a, IC904a, and IC904b (on Card #9).

Acute failure in an audio sidechain (such as IC latch-up) will either misbias the main signal path or add distortion to the main signal, without causing the main signal to disappear.

D❑ Check for failure in clipper-diode bias supplies.

Low bias voltage will cause excessive clipping, and will also result in abnormally low modulation.

Verify the presence of approximately +1.5V DC at the cathode of CR802 on Card #8 when no signal is applied to the 8101B, and of approximately +1.35V DC when a 5kHz signal (at a level that will trigger gain reduction) is applied to the 8101B's L INPUT. Repeat for CR902 on Card #9 — apply the 5kHz signal to the R INPUT.

All manuals and user guides at all-guides.com

Verify the presence of approximately −4.2V DC at pin 1 of IC613 on Card #6, with or without signal (the COMPRESSOR and LIMITER switches should be set to OPERATE).

E☐ If the 8101B's COMPRESSION MASTER G/R or TOTAL BASS G/R meter pegs at the *top* of the scale (beyond 0), check the corresponding exponential converters and timing module for failure.

If the exponential converters (IC501, IC502, IC506, IC507) or timing modules (A1, A2) on card #5 are defective, the result could be very low (or no) control current reaching the VCAs on Cards #3 and #4, which would cause VCAs to take very high gain, and that would result in severe clipping.

F☐ Swap Cards #0 and #1.

If the problem moves from one channel to the other, the Hilbert Transform Clipper on one of these cards is probably faulty. Remove and bypass *both* cards (see step 4 on page 5-5 for bypass instructions).

14) For vocal sibilance distortion problems:

A☐ Verify that the source material is undistorted at the 8101B's INPUT terminals.

B☐ Check for failure of the distortion-canceling and low-pass filters on Cards #8 and #9.

C☐ Check the high-frequency limiter on Card #6.

If the high-frequency limiter isn't working at all, then even a properly operating distortion-canceling filter may generate some audible distortion. The HF LIMIT indicator will not light when the corresponding high-frequency limiter isn't working — regardless of how rich in high-frequency energy the program material is.

D☐ Check for phase corrector failure.

See step 12-H on page 5-9.

15) If the GATE light is behaving abnormally:

This probably indicates a failure of the gating circuitry on Card #5.

16) If you hear pumping or other dynamic audio problems:

The timing circuitry on Card #5 may be faulty. Factory service is recommended (some of this circuitry is contained in sealed modules).

17) If you *still* have a problem:

Contact Orban Customer Service — see page 5-15.

All manuals and user guides at all-guides.com

Components: Fault Diagnosis, Replacement

If you want to troubleshoot on the component level instead of returning the unit to the factory for service, read the circuit description in Section 6 before continuing. Servicing on the component level requires a deeper understanding of 8101B circuitry.

Here are some suggestions for component-level troubleshooting:

IC opamps are operated such that the characteristics of their associated circuits are essentially independent of IC characteristics and dependent only on external feedback components. The feedback forces the voltage at the − input terminal to be extremely close to the voltage at the + input terminal. Therefore, if you measure more than a few millivolts difference between these two terminals, the IC is probably bad.

Exceptions are ICs used without feedback (as comparators) and ICs with outputs that have been saturated due to excessive input voltage because of a defect in an earlier stage. However, if an IC's + input is more positive than its − input, yet the output of the IC is sitting at −14 volts, the IC is almost certainly bad. The same holds true if the above polarities are reversed. Because the characteristics of the 8101B's circuitry are essentially independent of IC opamp characteristics, an opamp can usually replaced without recalibration. The dual current-controlled gain blocks employed in the VCAs (IC1 and IC11 on Cards #0 and #1, IC305 and IC309 on Card #3, IC405 and IC409 on Card #4) are ***not*** opamps. If these chips are replaced, calibration is *absolutely necessary.*

A defective opamp may appear to work, yet have extreme temperature sensitivity. If parameters appear to drift excessively, freeze-spray may aid in diagnosing the problem. Freeze-spray is also invaluable in tracking down intermittent problems. But *use it sparingly*, because it can cause resistive short circuits due to moisture condensation on cold surfaces.

Before **ordering parts,** read the introduction to the parts list on page 6-27. Nearly all parts used in the 8101B have been very carefully chosen to make best use of both major and subtle characteristics. For this reason, parts should always be replaced with *exact duplicates* if so indicated in the parts list. It is very risky to make "close-equivalent" substitutions because of the possibility of altering performance and/or compliance with regulatory requirements.

Certain parts are selected to tighter than normal specifications (most such parts are noted in the parts list — but it is almost always wiser to return the defective card to the factory for service). Certain parts require partial recalibration if replaced, and this may or may not be practical in the field (such parts are also noted in the parts list). Some cards have potted modules which must be replaced as a unit (ordinarily, this requires return of the entire card to the factory).

It is important to use correct technique when **replacing components** mounted on printed circuit cards. Failure to do so may result in circuit damage and/or intermittent problems. Because solder flows well into the through-holes of the double-sided plated-through circuit boards used in the 8101B, a technique like the following is required.

All manuals and user guides at all-guides.com

To replace a component:

1) Remove the old component.

It is sometimes easier to cut the offending components from its leads, then remove the leads as described below.

A❑ Clear each lead to be removed by melting the solder *on the solder side* (underneath) of the printed circuit card. When the solder melts, vacuum it away with a spring-actuated de-soldering tool (like the Edsyn Soldapullt®).

> Use a **30-watt soldering iron** — do *not* use a soldering gun or a high-wattage iron! DO NOT OVERHEAT the card. Overheating will almost surely cause the conductive foil to separate from the card base.

B❑ Release the component by gently wiggling each of the leads to break solder webs, then lift the component out.

2) Install the new component.

A❑ Bend the leads of the replacement component so they will fit easily into the appropriate circuit card holes.

B❑ Solder each lead to the bottom side of the card.

> Use a 30-watt soldering iron and a good brand of *rosin-core* solder. Make sure that the joint is smooth and shiny.
>
> If no damage was done to the plated-through hole when the old component was removed, soldering of the top (component side) pad is not necessary. But if the removal procedure did not progress smoothly, it would be prudent to solder each lead on the component side of the hole to avoid potential problems.

C❑ Cut each lead of the replacement component close to the solder side of the circuit card with a pair of diagonal cutters.

D❑ Remove all residual flux with a swab moistened with solvent.

> Suitable solvents include 1,1,1-trichloroethane (sold as Energine® Fireproof Cleaning Fluid), naphtha (sold as Energine® Regular Cleaning Fluid), and 99% isopropyl alcohol.
>
> Make sure that the flux has actually been removed, and not just made less visible by smearing. While most rosin fluxes are not corrosive, they can slowly absorb moisture and become sufficiently conductive to degrade circuit performance.

All manuals and user guides at all-guides.com

Technical Support, Service

If the troubleshooting information in this manual doesn't help you solve your problem, contact Orban Customer Service. Be prepared to accurately describe the problem, including the results of diagnostic tests you have performed. Know the serial number (and "M" number, if any) of your 8101B — these are printed on a label attached to the rear panel of the 8101B.

Always contact Customer Service before returning a product to the factory for service. Often, a problem is due to misunderstanding, or is relatively simple and can be quickly fixed after telephone consultation. In any case, products will be accepted for factory service *only* after Customer Service has issued a Return Authorization number. This number flags the returned 8101B for priority treatment when it arrives on our dock, and ties it to the appropriate information file.

Telephone:	(1) 510/351-3500
Telex:	17-1480
FAX:	(1) 510/351-0500
Write:	Customer Service Orban, a division of AKG Acoustics, Inc. 1525 Alvarado Street San Leandro, CA 94577

To ship a circuit card, use the packaging in which Orban shipped you the loaner card. Do not use a "jiffy bag" or similar padded mailer — it will not provide sufficient protection.

To ship the complete 8101B, use the original packing material if it is available. If it is not, use a sturdy, double-wall carton no smaller than 22 × 15 × 12 inches (56 × 38 × 30 cm) with a minimum bursting test rating of 200 pounds (91 kg). Place the chassis in a plastic bag (or wrap it in plastic) to protect the finish, then wrap cushioning material around it. Do not pack the 8101B in crumpled newspaper — use bubble sheets, large foam beads, thick fiber blankets, or similar packing materials. Put at least 2 inches (5 cm) of cushioning on all sides of the 8101B, and tape the cushioning in place to prevent shifting during shipment. Close the carton without sealing it and shake it vigorously (if you can hear or feel the 8101B move, use more packing). Seal the carton with 3-inch (8cm) reinforced fiberglass or polyester sealing tape (narrow or paper tapes won't hold), top and bottom in an H pattern. Mark the package with the name of the shipper, and with these words in red:

DELICATE INSTRUMENT, FRAGILE!

Insure the package appropriately. Ship prepaid, *not collect.* Do not ship parcel post. Your Return Authorization number must be shown on the label, or the package will *not* be accepted.

The terms of the Orban Limited One-Year Standard Warranty are detailed on a separate Warranty Certificate supplied with the 8101B. After expiration of the warranty, a reasonable charge will be made for parts, labor, and packing if you choose to use the factory service facility. The repaired 8101B will be returned C.O.D. In all cases, transportation charges (which are usually quite nominal) are paid by the customer.

All manuals and user guides at all-guides.com

Section 6
Technical Data

page contents

6-2 Specifications

6-5 Circuit Description

6-27 Parts List

6-41 Schematics, Assembly Drawings

6-62 Abbreviations

All manuals and user guides at all-guides.com

Specifications

Performance

Frequency response: Follows standard 50µs (or 75µs) pre-emphasis curve ±0.75dB, 50–15,000Hz (strapped for pre-emphasized output, COMPRESSOR and LIMITER switches set to PROOF).

Noise: –75dB referenced to 100% modulation, 50–15,000Hz (–81dB typical).

Total system distortion: <0.25% THD, 50–15,000Hz (0.02% typical), with de-emphasized output, 100% modulation, and COMPRESSOR and LIMITER switches set to PROOF.

System separation: >50dB, 50–15,000Hz (60dB typical).

Installation

Audio Input

Configuration: Left and right.

Impedance: >10K ohm load impedance, electronically balanced. Balanced source ≤600 ohms recommended (not required).

Common mode rejection: >60dB at 60Hz.

Sensitivity: –30dBu to +10dBu (to produce 10dB master band gain reduction at 1kHz).

EMI suppressed: Yes.

Connector: Barrier strip (#5 screws).

Audio Output

Configuration: Left and right, pre-emphasized *or* flat.

Impedance: <30-ohm source impedance, balanced (independent of settings of OUTPUT ATTENUATORs). Load impedance should be >300 ohms.

Peak output level: Adjustable from –∞ to >+20dBm. Output clipping level: >+21dBm into 600 ohms.

If option OPT-022 is installed, maximum output level is restricted to 4.5VRMS (see OPT-022 note on page 4-11).

EMI suppressed: Yes.

Connector: Barrier strip (#5 screws).

Remote Gain Reduction Meter Output

Configuration: Negative DC voltage proportional to total master band gain reduction. Scale: approximately –0.33V/dB; source impedance: 8.87K ohms. See page 2-23.

Connector: Barrier strip (#5 screws).

Power

Power requirement: 115/230V AC (±15%), 50–60Hz, 31VA.

Connector: IEC mains connector with detachable 3-wire power cord and plug supplied.

Protection: AC power input is EMI-suppressed.

Fuse: 1/2-amp 3AG Slow-Blow for 115V operation; 1/4-amp (250mA) 5x20mm "T" type for 230V operation.

All manuals and user guides at all-guides.com

Physical

Dimensions: 19 inches (48.3 cm) wide, 7 inches (17.8 cm) high, 12.5 inches (31.2 cm) deep. Requires 4 rack units.

Operating temperature range: 0–50°C (32–122°F).

Humidity: 0–95% relative humidity, non-condensing.

Circuitry

Input Conditioning

High-pass Filter: Third-order Chebychev with 30Hz cut-off and 0.5dB passband ripple. Down 0.5dB at 30Hz, 10.5dB at 20Hz, 31.5dB at 10Hz. Protects against infrasonic gain modulation in the compressor.

Phase Scrambler: All-pass network makes peaks more symmetrical to best utilize the symmetrical peak overload characteristics of the FM medium.

Master Band Compressor

Attack time: Approximately 1ms.

Release time: Program-controlled (varies according to program dynamics and amount of gain reduction). Process can be scaled fast or slow with the RELEASE TIME control. Employs delayed release for distortion reduction.

Threshold of compression: Controlled by INPUT ATTENUATOR controls.

Operation: Gains of left and right channels track to avoid stereo perspective shift.

Total Harmonic Distortion: <0.1%, 200–15,000Hz, 0dB to 25dB gain reduction (measured at VCA output, COMPRESSOR and LIMITER switches set to OPERATE, and the RELEASE TIME control centered).

Available gain reduction: 25dB.

Bass Band Compressor

Attack time: Program-controlled (not adjustable).

Release time: Program-controlled (not adjustable). Incorporates delayed-release distortion reduction.

Operation: Gains of left and right channels track to avoid stereo perspective shift.

Bass coupling: Adjustable tracking of master band gain by bass band, variable from fully tracking to fully independent operation.

Total Harmonic Distortion: <0.1%, 50–200Hz, 0dB to 30dB gain reduction (measured at VCA output, COMPRESSOR and LIMITER switches set to OPERATE).

Available gain reduction: 30dB.

Crossover

Control: 6dB/octave at 200Hz.

Program: 12dB/octave at 200Hz in unique "distributed crossover" configuration.

High-frequency Limiter

Attack time: Approximately 5ms.

Release Time: Approximately 20ms. Incorporates delayed-release distortion reduction.

Threshold of high-frequency limiting: Adjustable over a 3dB range.

Operation: Left and right channels operate independently to prevent high frequencies in one channel from causing audible timbre modulation in the other channel. Stereo perspective is preserved by the fast release time.

All manuals and user guides at all-guides.com

Hilbert Transform Clipper™

Bandwidth: 15.4kHz.

Distortion characteristics: <2.5% THD produced by individual frequencies in the range 30–4,000Hz when driving Hilbert Transform Clipper to 6dB beyond threshold of limiting. Further distortion cancellation ensures that distortion components in the range 0–2,200Hz are canceled by more than 30dB below overshoot compensator threshold for any input, including program material. At driving frequencies above 4,000Hz, characteristics are those of a "hard" clipper.

Amount of clipping: Adjustable over a 6dB range.

FCS (Frequency-Contoured Sidechain) Overshoot Compensator™

Operation: Best thought of as a "band-limited safety clipper," the FCS circuit operates like a hard clipper — but without producing out-of-band frequency components. It is followed by a safety clipper that is aligned so that it is almost never active and thus fully preserves the band-limiting provided by the FCS circuit.

Peak modulation control: Within ±2% on typical program material; ±3.5% worst case.

Sine-wave modulation ability: 93% modulation (0.6dB below maximum overshoot level) at all frequencies.

"Proof" Test Mode

Compressor: Setting COMPRESSOR switch to PROOF defeats both master and bass band gain reduction control.

Limiter: Setting LIMITER switch to PROOF defeats the high-frequency limiters, Hilbert Transform Clippers, FCS Overshoot Compensators, and safety clippers.

Warranty

One year, parts and labor: Subject to limitations set forth in our Standard Warranty.

all-guides.com

All manuals and user guides at all-guides.com

Circuit Description

Where the circuitry is duplicated in the left and right channels, only the left channel reference designators will be identified. Substitute the corresponding number for the right channel. Components in right channel Card #3 are numbered in the 300 range; corresponding components on left channel Card #4 are numbered in the 400 range (e.g., IC305, IC405). Cards #8 (left) and #9 (right) are numbered in the 800 and 900 ranges, respectively. Cards #0 (left) and #1 (right) share the same component numbers in the 0–99 range.

Circuit description:	Page:
Overview	6-5
Input Amplifier	6-7
30Hz High-pass Filter	6-7
Phase Scrambler, Pre-emphasis/De-emphasis	6-8
Dual-band Compressor	6-9
Crossover, Bass Clipper	6-9
Voltage-controlled Amplifiers	6-10
Compressor Control, Metering	6-11
Phase-corrected Low-pass Filter, Pre-emphasis	6-15
High-frequency Limiter	6-16
Peak Limiting	6-17
Hilbert Transform Clipper	6-18
Dynamic Threshold Clipper	6-20
Phase-corrected Bandpass Filter	6-21
FCS Overshoot Compensator	6-23
Balanced Line Amplifier, De-emphasis	6-24
Power Supplies	6-25

1. Overview

The input audio signal is RFI-suppressed and applied to attenuation pads. A 30Hz 18dB/octave high-pass filter prevents subsonic information from disturbing the operation of the 8101B or stereo coder. Signal peaks are made more symmetrical by a phase scrambler to reduce clipping distortion and allow better control of loudness.

Dual-band automatic gain control (AGC) processes the audio in two bands: a *master* band for audio above 200Hz, and a *bass* band for audio below 200Hz. The BASS COUPLING control determines whether the two compressors operate independently, making audio quality more consistent by correcting frequency imbalances between bass and midrange, or with the bass band tracking the master band to preserve frequency balances. The bass band control loop is activated even when the bands are coupled. Heavy bass will affect only the bass band gain, rather than forcing gain reduction of the entire signal, as in a single-band system. This, along with program-controlled attack and release time-constants, eliminates audible pumping and gain modulation.

All manuals and user guides at all-guides.com

The RELEASE TIME control determines how fast the gain of the master band compressor recovers when the program material falls below the compression threshold. This control is adjustable over a wide range. It affects the *density* of the sound and the short-term dynamic range. When the control is set toward SLOW, the AGC acts as a gentle gain-riding device, producing an open sound with no audible compression. When the control is set toward FAST, the sound becomes louder, but denser and more compressed.

Gating prevents noise rush-up and makes the 25dB gain reduction range fully useful. The GATE THRESHOLD control adjusts the level below which the AGC gain "freezes". A high gating level preserves long-term dynamic range by preventing quiet passages from being increased unnaturally.

A low-pass filter prevents intermodulation between in-band and out-of-band frequency components in the clipper, and prevents out-of-band components from affecting the operation of the high-frequency limiter. This filter is followed by the pre-emphasis network.

The high-frequency limiter is controlled by high frequencies *only*, eliminating any possibility of modulation of high-frequency content by low-frequency material.

The patented Hilbert Transform Clipper™ provides effective peak control without introducing audible distortion. It contains filters to protect the stereo pilot tone and to ensure that the clipping does not introduce out-of-band frequency components. It allows substantially more clipping than in conventional systems, which significantly improves audible high-frequency response by minimizing the amount of high-frequency limiting necessary to avoid audible distortion.

The Hilbert Transform Clipper makes use of psychoacoustical factors and of the de-emphasis built into all receivers to achieve very low levels of perceived distortion on both voice and music. It is harmonic distortion, rather than intermodulation distortion, that most severely degrades voice. Since the Hilbert Transform Clipper produces no harmonic distortion in the voice frequency range, voice is kept clean. Sibilance distortion is eliminated by a patented Orban feedforward distortion-canceling filter. Intermodulation is minimized above 4kHz, where music has substantial energy (particularly after pre-emphasis).

The output of the Hilbert Transform Clipper contains overshoots due to the addition of the distortion-canceling signals and to overshoots in its integral 15kHz low-pass filter. These overshoots are eliminated by the FCS (Frequency-Contoured Sidechain) Overshoot Compensator™, without adding out-of-band frequency components. The FCS Overshoot Compensator essentially acts as a band-limited safety clipper.

The output of the 8101B OPTIMOD-FM is available pre-emphasized or flat in L/R format. The non-overshooting RFI filters are effective from 500kHz to 1GHz.

All manuals and user guides at all-guides.com

2. Input amplifier

Located on Cards #3 and #4

The audio is applied to an RFI suppression network and to a attenuation pad (which can be strapped for 0 or 20dB attenuation). The RFI-suppressed audio is then applied to a low-noise true instrumentation amplifier with symmetrical, high-impedance + and − inputs. The gain of this amplifier can be adjusted from 0.88 to approximately 10.5 (a 21.5dB range). If this range does not yield the desired amount of gain reduction, the input attenuation pad should be re-strapped.

Because the input is DC-coupled, only small amounts of differential DC should be applied to the input. Since the input would typically be fed by the output of a transformer or capacitively coupled amplifier, this should not be a problem. Slight amounts of DC offset are eliminated in the 30Hz high-pass filter that follows the input amplifier.

Component-level description:

The input is RF-filtered, then applied to 10K bridging pad R303, R304, R305. Strapping R305 into the pad introduces 20dB attenuation (the 8101B is shipped with R305 strapped in).

The output of the pad is connected to low-noise true instrumentation amplifier IC301a, IC301b, IC302a, and associated resistors. R306, R307 provide bias current for IC301, which is a low-noise bipolar-input dual IC opamp. R308, R311 are feedback resistors for the two sections of IC301. The differential gain is controlled by the series resistance of R310 and LEFT INPUT ATTENUATOR control R309. The common-mode gain of the IC301 pair is 1.

The differential output of IC301a and IC301b is converted to a single-ended output; the common mode component of the output is nulled by differential amplifier IC302a and associated resistors. CMRR trimmer R316 adjusts the balance of the resistor network to ensure maximum common-mode 50 or 60Hz rejection.

NOTE: Nearby lightning strikes may induce energy into the 8101B's audio input that is sufficient to pass through the RFI protective networks and destroy IC301 or IC401. If the 8101B is installed in a lightning-prone location, keep spare NE5532 chips in stock. Installation of varistors between each side of the audio input lead and earth may help prevent such problems.

3. 30Hz High-pass Filter

Located on Cards #3 and #4

The output of the input amplifier is applied to a third-order Chebychev high-pass filter with a 30Hz cut-off frequency (0.5dB down) and 0.5dB ripple. This filter was not designed to be conveniently bypassed because it eliminates modulation-wasting subsonic energy from turntable rumble and other sources, eliminates distortion caused by modulation of the compressor control voltages by such subsonic energy, and prevents of destabilization and/or distortion in exciter AFCs. The only common musical instrument that produces fundamental frequencies that are below this filter's cut-off frequency is the pipe organ. Most records cut off at 30Hz, and no rock-and-roll instruments have fundamentals below 40Hz.

All manuals and user guides at all-guides.com

The ringing introduced by the filter is insignificant — comparable to that introduced by a well-designed vented box loudspeaker with a 30Hz cut-off. (And the ear is very insensitive to ringing in this frequency range, anyway.)

Component-level description:

30Hz high-pass filter IC302b, C303, C304, C305, R317, R318, R319 is a third-order Chebychev filter with 0.5dB passband ripple (nominal) and a ripple bandwidth (−0.5dB frequency) of 30Hz. It is realized as a unity gain voltage-controlled voltage source (VCVS) active filter. This filter is non-inverting, has a gain of exactly 0dB in the passband, and uses positive feedback to sharpen up the response around the cut-off frequency. Most modern books on active filters discuss this type of filter (see, for example, Wong and Ott: *Function Circuits.* New York, McGraw-Hill, 1976, pp. 230-231).

4. Phase Scrambler, Pre-emphasis/De-emphasis

Located on Cards #3 and #4

The FM medium has symmetrical positive and negative overload points (±100% modulation). Voice, as well as some music, has highly asymmetrical waveforms. Therefore, the most efficient use of the overload constraints of the FM medium is achieved by processing waveforms to make their peaks more symmetrical.

The 8101B achieves this by a combination of the crossover network in the multi-band compressor and a third-order non-minimum-phase filter. The crossover is 12dB/octave; when its outputs are summed, it provides a single-order phase shift to complete the phase scrambler function.

The frequency response of the second stage of the phase scrambler is slightly peaked to provide pre-emphasis into the multiband compressor to improve its accuracy. A de-emphasis stage after the bands are summed restores flat response.

The phase scrambler is a low-Q circuit that does not introduce ringing. Its audible effect is extremely subtle. It can be heard as a very slight change in the sound of some voices. Music, in general, is unaffected audibly. Despite the fact that square waves emerging from the scrambler no longer look like square waves, the purist should not fear that it is degrading audio quality. It is in fact significantly improving the subjective distortion performance of the system.

Component-level description:

This filter contains a single-order all-pass filter (IC303a, R320, R321, R322, C306) followed by a second-order non-minimum-phase peaking equalizer (IC303b, R323, R324, R325, R326, R327, C307, C308). The phase response of the first section varies from 0° to 180° as a function of frequency, while the phase response of the second section varies from 0° to 360° as a function of frequency. The amplitude response of the first section is flat; the amplitude response of the second section is broadly peaked at approximately 200Hz.

To restore flat response, a complementary dipping-equalizer section is located *after* the two bands of the dual-band compressor have been recombined. This circuit consists of IC307a, R359, R360, R361, R362, R363, C319, C320. Its gain far from 200Hz is −1.76dB, and it exhibits a second-order dip centered at 200Hz.

All manuals and user guides at all-guides.com

5. Dual-band Compressor

Audio on Cards #3 and #4, Control on Card #5

Operating the third band of a conventional tri-band compressor independently of the rest of the bands yields very unnatural high-frequency response when auditioned on high-quality receivers. In addition, operating the low-frequency band independently may result in unnatural frequency balances with certain music — especially "beautiful" or classical music. The 8101B's multiband compressor is quite dissimilar to those found in typical tri-band units: it offers unprecedented versatility in combination with very natural, unfatiguing sound.

The "master" band of the 8101B compressor processes *all* program material above 200Hz, while the bass band compressor processes material that is between 30Hz and 200Hz. The master band compressor is a feedback compressor: its control voltage can be summed in a dB-linear manner (USA patent #4,249,042) with the bass band compressor control voltage to control the gain of the bass band VCA.

Summation is variable from none at all (in which case the master and bass bands operate independently, as in a conventional tri-band compressor) to unity gain (when the bass band always takes as much gain reduction as the master band channel). In the latter, "quasi-wideband" case, the bass band feedback compressor control loop is still active, and causes further gain reduction in the bass band VCA when program material with excessive bass energy is present. This avoids the pumping which would occur in a fully wideband system if excess bass were to force gain reduction of the entire program.

The dual-band compressor consists of an audio path and control circuitry. First, the audio path will be described generally, then details of the VCA operation and control circuitry operation are provided.

6. Crossover, Bass Clipper

Located on Cards #3 and #4

The 8101B employs a 12dB/octave crossover, which is made up of two identical 6dB/octave filters in series — with the polarity of the bass band inverted. The sum of the two outputs has a perfectly flat magnitude response, but exhibits an overall phase shift. This phase shift is an integral part of the phase scrambler used to make peaks more symmetrical.

The crossover is realized as a "distributed crossover" (USA patent #4,249,042): the first 6dB/octave section is *before* the VCA, and the second 6dB/octave section is *after* the VCA *and* the control voltage rectifier. The control voltage circuitry is therefore fed from a 6dB/octave crossover only.

This configuration permits insertion of a soft clipper immediately after the bass band VCA to eliminate overshoots which would otherwise intermodulate with the output from the master band VCA when the sum of the bass and master bands is pre-emphasized and clipped. The second part of the bass band crossover is *after* the bass band clipper, so it low-pass filters the clipper output and rolls off harmonics and out-of-band IM introduced by the clipping process. In-band IM is negligible because of the relatively narrow bandwidth processed by the bass band.

All manuals and user guides at all-guides.com

The sum of the bass and master bands is applied to a de-emphasis network to cancel out the pre-emphasis introduced in the phase scrambler circuitry.

Component-level description:

The first 200Hz high-pass section for the master band compressor is filter C309, R328. The second 200Hz high-pass section is C318, R357. The first 200Hz low-pass section for the bass band is R342, R343, C314. The second low-pass section for the bass band is R367, R366, R365, C321.

A clipper, consisting of biased diodes CR303, CR304, and resistors R367, R366, is located before the second low-pass section (so the second low-pass section rolls off harmonics created by clipping).

To force the master and bass bands to add correctly, the polarity of the bass band VCA is inverted by IC309b.

7. Voltage-controlled Amplifiers

Located on Cards #0, #1, #3, and #4

The 8101B uses proprietary class-A voltage-controlled amplifiers (VCAs), operated as two-quadrant analog dividers with gain that is inversely proportional to a current injected into the VCAs' gain-control ports. A specially-graded Orban IC contains two matched non-linear gain-control blocks with differential inputs and current outputs. The first of these is employed in the feedback loop of an opamp to perform the gain control function. The inputs of the first and second gain-control blocks are connected in parallel. The output of the second block is a distortion-corrected *current* that is transformed into the desired gain-controlled voltage by an opamp current-to-voltage converter. For most gains, levels, and frequencies, THD is well under 0.1%. Overload-to-noise ratio (when noise is measured in a 20–20,000Hz bandwidth) is typically 90dB, and is constant with respect to gain and level.

Component-level description:

Because this VCA is used in a similar way throughout the 8101B, only the left channel master band VCA (on Card #3) will be specifically described here.

The basic operation of the VCA depends on a precisely matched pair of gain-control blocks with differential voltage inputs and current-source outputs. The gain of each block is determined by a control current.

If used alone, one of the paired gain-control blocks would introduce considerable distortion. Therefore, the first of the two matched blocks (IC305a) is used as the feedback element in a high-quality operational amplifier (IC304). The second of the matched blocks (IC305b) is then driven by the pre-distorted output of IC304.

The output of IC304 is first attenuated by R334, R335, C311, and then applied to the input of the feedback element IC305a. The output of IC304 is pre-distorted as necessary to force the current output of IC305a to precisely and linearly cancel the audio input into the virtual ground summing junction of IC304. This same pre-distorted voltage is also connected to the input of IC305b. The output of IC305b is therefore an undistorted current, which is

All manuals and user guides at all-guides.com

converted to a voltage in current-to-voltage converter IC306a, R341, C312, and GAIN trimmer R376. The output of IC306a is the output of the VCA.

Because IC305a is in the feedback loop of IC304, the gain of the VCA is *inversely* proportional to the gain of IC305a. So, if the control current is applied to the control port of IC305a (through R333), the VCA will behave like a two-quadrant analog *divider*. However, if the control current is applied to the control port of IC305b, then the gain of the VCA will be directly proportional to the gain of IC305b, and the VCA will behave like a two-quadrant *multiplier*. The VCA is used as a divider in the master and bass band VCAs.

In the master band VCA, a fixed current is applied to the control port of IC305b through R339, R340, CR301 to fix the gain of IC305b. CR301 provides temperature compensation. Second-harmonic distortion introduced by differential offsets in either IC305a or IC305b, is canceled by a nulling voltage applied directly to the input of IC305b by resistor network R337, R338 and DIST NULL trimmer R336.

If the VCA is not perfectly balanced, "thumps" caused by control current feedthrough can appear at the output. These are equivalent to multiplying the control current by DC. If the correct DC offset is applied to the VCA input, this equivalent DC multiplication can be nulled to zero, eliminating the thumps. Such an adjustable DC offset is provided by R332 and THUMP NULL trimmer R331.

Frequency-compensation components R329 and C310 prevent the VCA from oscillating supersonically.

8. Compressor Control, Metering

Located on Card #5

Each of the left and right master band and left and right bass band compressors feeds its own rectifier-with-threshold. The signal level into the clippers that follow the compressors and pre-emphasis/high-frequency limiters is determined by the setting of the CLIPPING control, which simultaneously adjusts all rectifier thresholds (and thus the average compressor output level). Left and right rectifier pairs (which have current-mode high-impedance outputs) are OR-ed into individual timing circuits for the master and bass bands.

This proprietary timing circuitry is located in sealed modules. The master band timing circuitry is most critical to achieving natural sound. It provides: 1) peak limiting with very fast recovery time for transient material; 2) slower compression with recovery time that is a function of gain reduction; and, 3) recovery-delay for extra smoothing of the gain control voltage to avoid low-frequency distortion even with fast release times.

The recovery time of the slower compression can be adjusted with the RELEASE TIME control for the master band *only*. A gating circuit radically slows the recovery time of the compression if the input program level drops below a threshold set with the GATE THRESHOLD control. This gating prevents noise "swish-up" during pauses or low-level material. The gain eventually recovers to maximum over a period of about two minutes. This prevents the 8101B from "going to sleep" during, say, a quiet musical passage (below gating threshold) which follows a loud musical *sforzando*

All manuals and user guides at all-guides.com

that has forced considerable gain reduction. (This effect, incidentally, is why we chose not to incorporate an expander into the AGC system — such circuits tend to make musical mistakes like the one just described.)

The bass band timing circuitry is similar to the master band timing circuitry, and performs all of the same functions. Its time constants are optimized to give the most natural, dynamic sound.

Both timing circuits process the signal in logarithmic form, and have low-impedance outputs. The timing circuits drive the exponential converters that provide control current outputs for the master band and bass band VCAs. The BASS COUPLING control determines the amount of the master band timing circuitry's output that is summed (in a dB-linear manner) with the output of the bass band timing circuitry into the bass band exponential converter. Since the outputs of the timing circuits are dB-linear, the gain reduction meters have dB-linear scales.

The output of the master band timing module is applied to a peak detector which holds the fast-limiting component of the control voltage until the gain reduction meter ballistics have a chance to catch up. The output of this peak detector drives the TOTAL MASTER G/R meter, which shows the true peak value of the gain reduction.

The output of the master band timing module also drives a slewrate-limited amplifier that removes the fast limiting spikes from the voltage, and drives the COMPRESSION MASTER G/R meter, which shows the amount of slow compression.

The LIMITING MASTER G/R meter shows fast peaks *only*. The signal that drives this meter is derived by subtracting the output of the slewrate-limited amplifier from the peak detector.

Since the output of the bass band timing circuitry contains a much smaller fast peak limiting component than does the output of the master band timing circuitry, no peak detection is necessary for accurate metering. The output of the bass band timing circuitry drives its gain reduction meter directly.

Component-level description:

The output of the master band VCA is applied to voltage-in/current-out full-wave rectifier-with-threshold IC503a, IC504, R505, R506, R507, C502, CR502. This is essentially an opamp with a discrete class-B output stage. A bias voltage of −12V at IC503a's + input holds the voltage at this opamp's − input at −12V (through feedback) and provides appropriate bias to prevent rectifier saturation. R507 determines the rectifier's transconductance. C502 provides DC blocking between the nominal ground potential of R507's input side and the −12V at IC503a's − input.

A negative-going voltage at the input side of R507 pulls current away from the AC virtual ground at IC503a's − input. An equal current must therefore flow into the − input by turning on NPN transistor IC504c. Because of the class-B biasing, this assures that PNP transistor IC504d is off.

A collector current essentially equal to IC504c's emitter current flows into IC504c from the output terminal of the rectifier. Part of this current comes from the rectifier load; part comes from the fixed collector current of PNP transistor IC504e. IC504e creates the threshold of limiting by saturating and diverting *all* of the class-B output stage collector current away from the load until the output stage current exceeds the nominal IC504e collector current.

All manuals and user guides at all-guides.com

When that happens, IC504e comes out of saturation and the difference between IC504e's collector current and the rectifier output current is delivered to the rectifier's load. IC504e's collector current is fixed by its emitter resistor R505, and by its base voltage as set by CLIPPING control R542. The CLIPPING control thus varies the collector current of IC504e, and therefore the threshold of limiting. When the COMPRESSOR switch is set to PROOF, CR502 and R506 parallel R505, which increases the collector current and raises the limiting threshold by approximately 14dB.

If the voltage at the input side of R507 goes positive, PNP transistor IC504d turns on, and NPN transistor IC504c turns off. The collector current of IC504d is inverted by Wilson current mirror IC504a, IC504b, CR504, and the current mirror output is summed into the output port of the rectifier, where it is also subject to the action of PNP threshold transistor IC504e.

The output of the left master band rectifier is OR-ed with the output of the right master band rectifier by diode-connected transistors Q503, Q505. Because the output of each rectifier is in the form of a current, voltage drops across the these diodes do not affect the accuracy of the rectifier.

The output of the OR circuit is applied to a proprietary circuit that computes the VCA control voltage. Release time control for the slow compression is provided by R508, R509. JFET switch Q501 radically slows the compression release, essentially freezing the gain at a signal from the gating circuitry described below. 22-megohm resistors across the gating FETs create a slow "leak" in the gating function that permits to gain to fully recover over a period of approximately two minutes.

The output of the control voltage module varies between 0 volts (for maximum gain) and approximately −10 volts (for minimum gain, or maximum gain reduction). Release is inhibited by applying a voltage of greater than +10 volts to the anode of CR503 to force Q501 off. Release is enabled by applying a voltage of less than −10 volts to the anode of CR503 — this reverse-biases CR503, causing R510 to force Q501's gate to the same potential as its source, which turns Q501 on.

The output of the release time module is a low-impedance voltage source. It is applied to exponential converter circuit IC501, IC502, MASTER GAIN CAL trimmer R501, R502, C501 through pad R503, R554, R555. The collector current of either matched transistor in IC502 is an almost perfect exponential function of its base-emitter voltage. The scaling factor of the converter is stabilized by IC501's forcing a constant current through IC502b. This current is determined by the current injected into IC501's − input through R502. The base of IC502b is grounded; the emitters of IC502a and IC502b are connected. So if IC502a and IC502b are perfectly matched, their collector currents will be equal when the base of IC502a is grounded. Varying the base voltage on IC502a varies its collector current exponentially about the nominal current in IC502b. This nominal current determines the quiescent (no gain reduction) gain in the VCAs. The current output at the collector of IC502a is connected to a matched pair of resistors, one of which feeds the gain control port of the left channel VCA, and the other of which feeds the gain control port of the right channel VCA. This is a current divider, analogous to the familiar resistive voltage divider.

The operation of the bass band control loop is essentially identical to the operation of the master band control loop. The only important difference is that the master band control voltage can be mixed into the input of the bass band exponential converter through BASS COUPLING control R521, and R518. When R521 is fully clockwise, the bass band exponential converter is

All manuals and user guides at all-guides.com

being fed as much master band control signal as the master band exponential converter. In the absence of output from the bass band release time module, bass and master band VCAs will thus track exactly.

Because the bass band rectifier is always connected to the output of the bass band VCA, exceptionally strong bass will exceed the threshold of bass limiting and cause the bass band release time module to produce a control signal that will momentarily decrease the gain of the bass band VCA below that of the master band VCA. This is the low-frequency equivalent of familiar high-frequency limiting.

Gain reduction metering:

Gain reduction metering in the master band is provided by three meters. The TOTAL MASTER G/R is driven by peak detector IC512, R530, C508, CR511. C508 captures negative-going peaks and discharges slowly through R530. To avoid being loaded by the meter, C508 is buffered by voltage-follower IC512b. The discharge time of C508 is sufficiently slow to permit the mechanical movement of the meter to rise to the actual peak level of the gain control voltage.

The COMPRESSION MASTER G/R meter is driven the output of the release time module through a grossly overcompensated 301A opamp IC511 connected as a voltage follower. The 2.2µF compensation capacitor C507 so limits the slew rate of IC511 that only the slow component of gain reduction is permitted to drive this meter.

The LIMITING MASTER G/R meter is connected differentially between the outputs of IC511 and IC512a. It thus indicates the fast component of gain reduction as the difference between the slow component and the peak-held total.

The TOTAL BASS G/R meter reads the sum of the master and bass band control voltages through R519, R520 in the same proportions that are applied to the input of the bass band exponential converter. In the interests of simplicity, the bass band metering signal is not electronically conditioned.

Gating circuitry:

The gating detector consists of a peak detector followed by a comparator. IC opamps are employed for both functions.

The left and right channel input signals are summed in R538, R539, and low-pass filtered at 3kHz by C510. The low-pass filtered sum is amplified by non-inverting amplifier IC513a, the gain of which can be varied by GATE THRESHOLD control R537 from 0 to approximately 40dB. The low-frequency response of IC513a is rolled off with C511 to prevent low-frequency noise from inhibiting the gate.

The positive peak output of IC513a is detected by CR514 and C503 (R536 determines the recovery time). The output of this peak detector is applied to comparator IC513b. R533, R534 create a reference voltage of +1.9 volts. If the output of the peak detector exceeds this value, then the output of IC513b is driven towards the negative power supply, and release is enabled. Otherwise, the output of IC513b rests close to the positive power supply, and release is inhibited. In this condition, the GATE light is lit by current supplied through R531, CR512. Hysteresis to assure clean switching is provided by positive feedback through R532.

All manuals and user guides at all-guides.com

When the COMPRESSOR switch is set to PROOF, CR513 applies +15 volts to the – input of IC513b to inhibit the gate and permit all VCAs to recover to full gain.

9. Phase-corrected Low-pass Filter, Pre-emphasis

Located on Card #6

After the outputs of the master and bass bands have been summed, they are passed to a filter which: 1) low-pass filters the signal at 15kHz and 24dB/octave to prevent frequencies beyond the bandwidth of the system from unnecessarily activating the high-frequency limiter, or causing unnecessary IM distortion in the clipper; 2) provides a standard FM pre-emphasis (75μs or 50μs); and 3) provides phase correction to make the delay of the low-pass filter plus pre-emphasis approximately constant, thus minimizing unavoidable increases in peak level.

The low-pass filter partially equalizes the frequency response variations in the main 15kHz low-pass filter (on Card #8/9) to provide flatter overall frequency response. The pre-emphasis is created by summing a second-order bandpass filter with the flat signal. The rising side of the filter slope provides the pre-emphasis; the falling side forms part of the low-pass filter. The phase corrector is a fourth-order all-pass filter, located *before* the low-pass filter and pre-emphasis.

Component-level description:

Phase correction for the pre-emphasis and fourth-order low-pass filter associated with it is provided by a fourth-order all-pass filter IC601, R601, R602, R603, R604, R605, R606, R607, R608, R609, C601, C602, C603, C604. The overall magnitude response of the filter between the card input and the filter output at IC601b is flat, gain is 0dB, and the phase response varies from 0°to 720°. The operation of the filter is difficult to explain in words, and is best left to a mathematical analysis.

The fourth-order low-pass filter is in fact *quasi-fourth-order*. The first section of the filter is generated by a conventional second-order multiple-negative feedback active low-pass filter IC602a, R610, R611, R612, C605, C606 (for an explanation of this type of circuit see, for example, Wong and Ott: *Function Circuits*. New York, McGraw-Hill, 1976).

The second section has been combined with the pre-emphasis and transformed from a purely low-pass form to a peaking bandpass equalizer. To understand this, first imagine a pre-emphasis cascaded with a 12dB/octave low-pass filter. As frequency is increased, the response will first rise at 6dB/octave, following the pre-emphasis. But when the cut-off frequency of the low-pass filter is encountered, the response will reverse itself and *fall* at 6dB/octave indefinitely. This is similar to the response of a peaking equalizer. However, when the response of the peaking equalizer falls, it does not fall indefinitely, but only until it reaches unity gain again.

The rising side of the 8101B's peaking equalizer matches the rising side of its pre-emphasis plus low-pass filter to very close tolerances. The falling side, after de-emphasis, represents the stopband of the filter. Thus, when considered as a totality, the response of the entire fourth-order filter will, instead of falling indefinitely at 24dB/octave, fall for approximately 20dB after cut-off at 24dB/octave, and at 12dB/octave thereafter.

All manuals and user guides at all-guides.com

10. High-frequency Limiter

Located on Card #6

High-frequency limiting is effected by dynamically reducing the pre-emphasis as required. To do this, a variable-gain stage is placed between the output of the bandpass filter that creates the pre-emphasis (described above) and the amplifier that sums the bandpass filter output with the main signal. The variable gain stage is realized by a junction FET operating as a voltage-controlled resistor. This is possible because the high-frequency limiters in the left and right bands are entirely independent, and do not need to track each other accurately.

Each band has its own rectifier and timing module. The timing in the high-frequency limiter is considerably simpler than that used in the compressor sections because only fast dynamic filtering occurs — there is no slower compression.

It should be noted that the 8101B's high-frequency limiter is activated by high-frequency energy *only*, is not sensitive to the peak level of the *entire* pre-emphasized signal, and thus therefore cannot be activated by low-frequency overshoot components from the multiband compressor.

The H-F LIMITING control adjusts the threshold of high-frequency limiting over a range of approximately 3dB. The lowest threshold results in very little clipping on sinusoidal tone; the +3dB threshold results in moderate clipping of tone above approximately 2kHz. In most cases, users prefer setting this control to "10" (= +3dB threshold), which results in minimum high-frequency limiting and maximum clipping control of high-frequency material (while still limiting any high-frequency energy which would otherwise cause disturbing distortion if clipped).

The high-frequency limiter is metered by a simple comparator circuit which lights the appropriate HF LIMIT light if any high-frequency limiting at all occurs. The main use of these lights are primarily is verifying that the high-frequency limiter circuit is operating properly.

Component-level description:

Transforming the low-pass filter as described above permits the differential creation of pre-emphasis by summing the output of bandpass filter IC602b, R614, R615, R617, C607, C608 with that filter's input. The summation occurs in IC605a. The output of IC602b is passed through a variable-gain stage, realized with FET IC603a and low-noise non-inverting amplifier IC604. By varying the gain with which the output of IC602b is summed with its input, a high-frequency limiter is created.

Ordinarily, IC603a is pinched off so maximum gain and full pre-emphasis is produced. As the gate voltage on IC603a is reduced toward ground, the resistance of IC603a decreases, which in turn increases the attenuation of voltage divider R619, R620, IC603a, and reduces the pre-emphasis.

The polarity reversal in IC602b requires that a compensating polarity reversal occur in the summing process. IC605a is thus non-inverting for the bandpass signal, and inverting for the main signal. In addition, R616 feeds some of the output of IC602b around the variable-gain stage out-of-phase. This permits complete cancellation of the pre-emphasis despite the inability of the FET variable-gain stage to achieve total cut-off.

The high-frequency limiter control circuitry is very similar to the compressor control circuitry. The output of the bandpass filter *only* is applied to the

All manuals and user guides at all-guides.com

rectifier-with-threshold, which is identical to the ones used in the compressor control circuitry. Similarly, the output of the rectifier is connected to a proprietary release time module. The limiting threshold is adjusted in essentially the same way as the compressor threshold is (see page 6-13). When the LIMITER switch is set to PROOF CR601 and R633 parallel R632, which increases the collector current and raises the limiting threshold by approximately 14dB.

The output of the release time module, unlike the outputs of the release time modules in the compressor control circuitry, is high impedance. It drives the high-impedance gate of FET IC603a through R625.

Gain reduction is indicated by an HF LIMIT light, driven by IC606a. FET BIAS trimmer R626 determines the quiescent gate voltage of IC603a to ensure pinch-off when no limiting is taking place. This voltage is applied through release time resistor R627 to the – input of IC606a (which will be pulled in the negative direction when gain reduction occurs).

The output of R626 is also applied to the + input of IC606a through R628. R629 pulls this + input slightly more negative than the output of R626 to hold the output of IC606a negative when there is no gain reduction. As soon as IC606a's – input is pulled slightly less positive (when there is gain reduction), IC606a's output goes positive and lights the HF LIMIT light through R630 and Q601 (used as a zener diode).

11. Peak Limiting

On Cards #0, #1, #8, and #9

Basic peak limiting is provided by Orban's exclusive Hilbert Transform Clipper. This circuit behaves like a single-sideband RF clipper below 4kHz, and like a conventional hard audio-frequency clipper above 4kHz. An RF clipper produces no harmonic distortion — only intermodulation distortion. Thus no harmonic distortion is introduced into the voice frequency range below 4kHz, and voice (which is far more degraded by harmonic than by intermodulation distortion) is processed as cleanly as possible.

Above 4kHz, the circuit produces more harmonic and less intermodulation distortion, minimizing difference-frequency intermodulation to yield minimum degradation of vocal sibilance and of music with substantial high-frequency content.

A crossover (essentially unrelated to the change in behavior at 4kHz) eliminates almost all distortion of *any* type below 2.2kHz — at the expense of a certain amount of overshoot, which is eliminated by the subsequent FCS Overshoot Compensator.

When the 8100A/XT2 Six-Band Limiter is used with the 8101B, the Hilbert Transform Clippers are defeated in the 8101B. The multiband clippers in the 8100A/XT2 then provide basic peak limiting.

All manuals and user guides at all-guides.com

It should be noted that it is normal for *sine waves* to modulate less than 100% when the 8101B's COMPRESSOR and LIMITER switches are set to OPERATE. There are two principal reasons for this:

- Some headroom is left between the threshold of the peak-limiting circuitry and the threshold of the subsequent overshoot corrector to accommodate the distortion corrector signal. No distortion corrector signal is produced with sine waves, so the headroom is not used and full 100% modulation does not occur.
- Sine waves have a very low peak-to-average ratio and a high loudness potential compared to program material of identical peak levels. The audio processing, in order to maintain natural sound quality, pushes sine waves down in level as it would any other similar program material with low peak-to-average ratio. In general, any audio processor which produces 100% modulation on sine waves tends to sound somewhat unnatural because it ignores this psychoacoustic factor.

12. Hilbert Transform Clipper

USA patent #4,495,643 Located on Cards #0 and #1

The signal into the Hilbert Transform Clipper is split into two paths: the main path consists of a chain of phase-shift networks; the other path is a chain of phase-shift networks cascaded with a sharp 4kHz low-pass filter. The two chains are designed so that the phase difference between their outputs is 90° from 30Hz to 4kHz.

The outputs of the two chains are applied to a vector sum generator, which computes the square root of the sum of the squares of the two outputs. The output of the vector sum generator is applied to the control ports of both a high-frequency VCA and (through a delaying low-pass filter) a low-frequency VCA. The output of the main phase-shifter chain is applied to the audio input of the high-frequency VCA and (through a low-pass filter) to the audio input of the low-frequency VCA. The control voltage and audio to the low-frequency VCA are therefore delayed equally.

If a sine wave below 4kHz is applied to the input of the Hilbert Transform Clipper, the output of the vector sum generator is ideally DC without ripple, the control voltage to the VCAs is constant, and no distortion is produced by the action of the VCAs. However, when more complex waveforms are applied, ripple does occur in the control voltage, producing intermodulation distortion — but no harmonic distortion. (Due to circuit tolerances, the actual sine wave THD produced is typically 1-2% up to 10dB clipping.)

The output of the high-frequency VCA is accurately peak-limited without overshoots regardless of its input spectrum, provided only that the phase difference between the inputs to the vector sum generator is 90° over the frequency range in which both chains have substantial output energy (i.e., below 4kHz). However, the control voltage to the low-frequency VCA is smoothed by the low-pass filter prior to its control port. Accordingly, little or no audible distortion is produced by this VCA, but smoothing its control voltage does cause some overshoots in its output.

All manuals and user guides at all-guides.com

Component-level description:

The main path consists of all-pass filters IC13, IC8a, and associated components. The other path is made up of all-pass filter IC10 and associated components, and 4kHz low-pass filter IC14 and associated components. The signal at pin 1 of IC8a and the signal at pin 7 of IC10b should have identical levels (±0.2dB) and a 90° phase difference (±2.5°) in the range 30–4000Hz. Above 4kHz, the output of the second chain should fall by more than 30dB/octave, and the 90° phase difference will no longer exist.

(The existence of the 90° phase difference can be checked with a Lissajous pattern displayed on an oscilloscope. If the oscilloscope X and Y inputs are connected to the two pins mentioned above, a circle the screen indicates an accurate 90° phase relationship between the two chains.)

The output of the main chain is full-wave rectified by precision rectifier IC8b and associated components. The output of the second chain is full-wave rectified by precision rectifier IC9a, IC4a, and associated components. These two rectified outputs are applied to a vector sum generator using a single log-antilog XY/Z multiplier/divider. The vector sum (i.e., the square root of the sum of the squares of the two rectified inputs) is computed by the "implicit" technique, using feedback (see Wong and Ott: *Function Circuits*. New York, McGraw-Hill, 1976, p. 206).

The vector sum is developed at pin 5 of IC4b. In addition, a threshold voltage (−2 volts when no input signal is present) is added in through R68 and RATIO trimmer R69. IC4b serves as a threshold amplifier. If the instantaneous input level to the Hilbert Transform Clipper is below 2.0V peak, the sum of the output of the vector sum generator and the threshold voltage will drive the output of IC4b (at pin 7) to the negative rail (due to its nominal non-inverting gain of 6.9), and CR3 will be off. In this case, the gain of high-frequency VCA IC11, IC12 and associated components, is determined by the *current* flowing through the sum of R75, R76, and R19 (which is constant because IC4b has been effectively disconnected when CR3 is off).

When the input to the Hilbert Transform Clipper exceeds 2V peak, the voltage on pin 5 of IC4b becomes more positive than −1.45V, and IC4b comes out of saturation, turning CR3 on and taking control of the high-frequency VCA control current. This current is determined by the voltage drop across R19. Normally, pin 6 of IC11a sits at approximately −13.5V, so the control current is determined by the voltage at the cathode of CR3.

The output voltage of IC4b (at the cathode of CR3) is buffered by IC6a and applied to second-order unity-gain constant-delay low-pass filter IC6b and associated components. IC6b drives R40, which has a value equal to that of R19. This ensures equal currents flow through R40 and R19 under steady-state conditions, so that R40 and R19 apply equal gain-control currents to the high-frequency VCA and to the low-frequency VCA IC1, IC2, and associated components.

For a description of the operation of the high-frequency and low-frequency VCAs, see page 6-10. The input to the low-frequency VCA is processed by low-pass filter IC7 and associated components. This filter is normally down 3dB at 3.0kHz and exhibits a deep notch at 6.9kHz. For equal control currents, the gain of the low-frequency VCA is normally about 5.5dB higher than the gain of the high-frequency VCA, because the sensitivities of the Card #8 inputs driven by the VCAs are unequal.

All manuals and user guides at all-guides.com

Proof mode is entered by turning Q1 on, which parallel R68 and RATIO trimmer R69 with R73 to increase the threshold. This has one subtle and peculiar side-effect which needs to be understood. The input of IC4b is protected (internally) by two back-to-back diodes. Under certain conditions in proof mode, these diodes can turn on, coupling the control-voltage signal at pin 5 into pin 6. This coupling can modulate the gain control current of the VCAs, even though pin 7 of IC4a is at the negative rail (its normal state in proof mode).

If sine waves *below* 4kHz are applied in proof mode, no problems occur because the output voltage from the vector-sum generator is almost ripple-free. Above 4kHz, substantial ripple appears on the control voltage because of the change in operating mode of the circuit above this frequency. Enough of this ripple can couple through the protection diodes of IC4b to produce as much as 1.0% THD before de-emphasis and 15kHz filtering (i.e., as observed at pin 1 of IC5a). Observed at the output of Card #8 *after* de-emphasis and filtering, THD can be as high as 0.25% between 4kHz and 5kHz only. This increase in distortion is entirely an artifact of proof mode and does not represent the actual distortion capabilities of the system in its normal operate mode. We felt that it was important to explain this phenomenon in some detail because its generating mechanism is very obscure, and because the increase in distortion above 4kHz in proof mode *only* might otherwise cause serious confusion while troubleshooting if it were misinterpreted as a system fault.

13. Dynamic Threshold Clipper

Located on Cards #8 and #9

This circuit is only used when when the Hilbert Transform Clippers (on Cards #0 and #1) are removed from service (see page 5-5) and the 8100A/XT2 Six-Band Limiter is not installed.

This straightforward shunt clipper is ordinarily biased with ±1.5 volts to provide a somewhat "soft" characteristic (although not nearly as soft as a pair of back-to-back unbiased diodes). This characteristic was chosen to obtain the best compromise between harmonic and intermodulation distortion induced by clipping, when the IM-canceling circuitry is taken into account.

The output of the bandpass filter in the high-frequency limiter on Card #6 feeds a rectifier with threshold. When high-frequency energy exceeds this threshold, the clipper bias voltage is reduced to reduce the clipping threshold by approximately 1.0dB and thereby provide headroom between the clipper threshold and the subsequent overshoot corrector threshold. This headroom accommodates the subsequent distortion corrector signal, which is needed to correct the intermodulation distortion produced when large amounts of high-frequency energy are clipped. If this headroom were not provided, the overshoot corrector would clip off the distortion corrector signal and negate its effect.

On the other hand, when the input signal to the clipper contains predominantly low-frequency energy, the distortion corrector loop is essentially ineffective. In this case, the absolute amount of clipping is minimized by raising the clipping threshold to approximately the threshold of the overshoot corrector.

All manuals and user guides at all-guides.com

Component-level description:

The threshold of the first clipper CR801, CR802 is varied dynamically by using the rectified output of IC602b (the high-frequency bandpass filter employed differentially in the pre-emphasis filter) to control the clipper threshold. The output of IC602b feeds rectifier-with-threshold IC806b, IC807, and associated circuitry. (The operation of this rectifier-with-threshold is identical to the one in the compressor control circuitry on Card #5.) This rectifier feeds RC filter R844, R847, R848, CR807, C826. R844 determines the attack time of the circuit in conjunction with C826. The recovery time is determined by the series combination of R847 and R848.

If the high-frequency energy present at the input to the rectifier is insufficient to overcome its threshold, IC808a's + input is held at ground by R847, R848. If output current flows into the rectifier, C826 is pulled negative through CR807. If the voltage across C826 attempts to go more negative than approximately −13 volts, the rectifier will saturate and limit the voltage swing to this value. Voltage divider R847, R848 attenuates this 13-volt variation so that it causes a voltage variation of −0.2V at the output of IC808a, thus changing the threshold of clipping by approximately 1.0dB.

A 1.5V quiescent bias for the clipper diodes is derived by passing the output of a voltage divider through CR808 to R846. IC808a then acts as a unity-gain inverting amplifier for the voltage at CR808's anode. CR808 temperature-compensates the threshold of clipping by reducing the clipper bias voltage as the voltage drop across the diodes increases with the temperature. The final diode bias voltage at the output of IC808a is thus the sum of the quiescent voltage contributed by the circuitry connected to the − input of IC808a, and of the voltage variation contributed by the circuitry connected to the + input of IC808a.

IC808b is connected as a unity-gain inverting amplifier to provides a complementary negative bias for CR802.

(It is important to understand that this approach results in sine waves not producing 100% modulation when the 8101B is in its normal operate mode — see discussion on page 6-18.)

14. Phase-corrected Bandpass Filter

Located on Cards #8 and #9

The output of the Hilbert Transform Clipper's high-frequency VCA (or the output of the dynamic threshold clipper) is applied to a 15kHz constant-delay bandpass filter. This filter cuts off sharply above 15kHz to remove harmonics generated by the Hilbert-Transform Clipper (the unclipped signal was already filtered in the pre-emphasis low-pass filter).

The bandpass characteristic is generated by applying the output of the high-frequency VCA to two low-pass filters with respective cut-offs of 15kHz and 2.2kHz. The output of the 2.2kHz low-pass filter is subtracted from the output of the 15kHz low-pass filter to eliminate energy below 2.2kHz from the difference signal and create a 2.2–15kHz bandpass characteristic.

The 15kHz low-pass filter incorporates an all-pass phase equalizer to achieve approximately constant delay and minimize overshoot. The 2.2kHz and 15kHZ low-pass

All manuals and user guides at all-guides.com

filters have identical delay to ensure effective cancellation when their outputs are combined. The 2.2–15kHz bandpass filter forms a constant-delay crossover network when it is summed with the output of the low-pass filter prior to the Hilbert Transform Clipper's low-frequency VCA. The summed output is equivalent to a constant-delay 15kHz low-pass filter.

Component-level description:

The signal from the Hilbert-Transform Clipper's high-frequency VCA is applied to inverting amplifier IC801a, which drives the two low-pass filters. The 15kHz fifth-order Cauer low-pass filter is made up of R806, R807, C801, C802, C803, C804, C805, C806, C807, L801, and L802. This filter is realized as a "passive ladder" for maximum stability, minimum noise, and minimum distortion. The filter's response is nominally +0, −0.6dB from 0 to 15.4kHz, with a sharp rolloff thereafter. There are notches at approximately 19kHz and 26.6kHz.

The load resistor for the filter, R807, is connected not to true ground but to the virtual ground of the summing junction of IC801b. IC801b is an inverting, frequency selective amplifier with a feedback network (R808, R809, C808) that provides a 2dB shelving rolloff to match the gentle rolloff of the 2.2kHz low-pass filter. This achieves a maximally sharp slope on the lower skirt of the bandpass filter produced by subtraction of the outputs of the 15kHz and 2.2kHz filters. Complementary shelving filter R811, R812, R813, C809 in the feedback loop of IC803b restores flat response later.

The output of IC801b feeds a differential sidechain that creates a fourth-order all-pass filter when its output is correctly summed with the output of IC801b (i.e., the main signal). This all-pass filter does not change the frequency response of the 15.4kHz low-pass filter, but it does add phase shift as necessary to make the overall time delay of the 15.4kHz filter plus all-pass network more constant than the time delay of the 15.4kHz filter alone.

Basically, this phase corrector sidechain consists of a pair of active inverting bandpass filters built around IC802a, IC802b. The IC802a filter is driven by the output of IC801b through R815. Its output is summed into summing amplifier IC803b through R817.

The second bandpass filter (associated with IC802b) is driven by both the main signal (through R814) and the output of the first bandpass filter IC802a (through R818). The output of IC802b sums into IC803b through R820. The third input to IC803b is the main signal (through R810).

In addition to driving the 15kHz low-pass filter, the output of IC801a also drives 2.2kHz low-pass filter C814, L803, A2. When cascaded with additional rolloff R821, R822, C815, the magnitude and phase of the 2.2kHz filter match the magnitude and phase of the 15kHz low-pass filter from 0 to 2.2kHz. IC803a is a unity-gain buffer to drive this final rolloff network, the output of which is directly summed into IC803b through R822.

If the output from the Hilbert Transform Clipper's low-frequency VCA were not summed into IC803, the output of IC803 would exhibit a sharply selective bandpass response due to the subtraction of the 2.2kHz low-pass filter output from the 15kHz low-pass filter output. (The subtraction is achieved because the 15kHz low-pass filter is inverting due to IC801b.) But the output of the Hilbert Transform Clipper's low-frequency VCA is also summed into IC803 (through R855). Thus, the output of IC803b is the final output of the Hilbert Transform Clipper, and is equivalent to a linear-phase 15kHz low-pass filter.

All manuals and user guides at all-guides.com

Because this output contains substantial overshoots, it is followed by the FCS Overshoot Compensator.

15. FCS Overshoot Compensator

USA Patent #4,460,871 Located on Cards #8 and #9

The patented FCS (Frequency-Contoured Sidechain) Overshoot Compensator is best thought of as a "band-limited safety clipper". That is, it performs the function of clipping off overshoots from the earlier peak limiting system, but does not produce out-of-band frequency components as a simple clipper would. Simultaneously, the FCS Overshoot Compensator does not significantly increase low-frequency intermodulation products when compared to a simple clipper performing the same function — a problem particularly characteristic of some other overshoot compensation circuits.

Briefly, the FCS Overshoot Compensator derives the overshoots from its input with a "center clipper", low-pass filters the overshoots with a fifth-order passive LC filter to remove out-of-band frequency components, and then mixes the filtered overshoots out-of-phase with a delayed version of the input signal. This delay (created by an encapsulated active all-pass network) is identical to the delay in the overshoot filter, ensuring that the input signal and filtered overshoots arrive in the same place at the same time.

Filtering of the overshoots reduces the peak level of the overshoots' high-frequency components by removing harmonics. To compensate for this loss of peak level (which would cause less than full cancellation of overshoot), the frequency response of the overshoot filter rises at 15kHz to increase the level of the high-frequency fundamental and compensate for the loss of harmonics. Hence the name, Frequency-Contoured Sidechain.

The final sum of input and out-of-phase filtered overshoot passes through a third-order low-pass filter to provide further attenuation of unwanted high-frequency energy. Phase correction is applied to the combination of this filter and the overshoot filter. (The phase response of the overshoot filter is identical to its matched main-path delay network, so the phase correction also corrects the response of the main-path delay network.) This phase correction makes the overall time delay through the entire FCS Overshoot Compensator approximately constant, and ensures that the various filters within the compensator do not upset the carefully controlled peak levels in unpredictable ways.

A safety clipper at the FCS Overshoot Compensator's output eliminates any residual overshoots caused by very unusual waveforms.

Component-level description:

Overshoots are derived from the input signal by center clipper IC804a, R823, R824, R825, R826, CR803, CR804. The center clipper characteristic is created by subtracting the output of a clipper from its input with a differential amplifier. The clipper consists of Schottky diodes biased with approximately ±4.2V, and is therefore substantially "harder" than the first clipper (associated with IC801a).

All manuals and user guides at all-guides.com

If the output of IC804a were simply added to its input, the sum would be a clipped signal; a "differential clipper" would be created. However, the output of IC804a contains clipper-induced high frequencies which could possibly cause aliasing in a stereo coder. The output of IC804a is therefore low-pass filtered by passive 15kHz ladder filter R828, R829, C816, C817, C818, L804, L805, before being added back into the input signal to cancel overshoots. This filter has a response that rises 4dB at 10kHz to make up for the loss of high frequencies which would otherwise reduce the peak level of the overshoots emerging from the filter. To compensate, the fundamental levels around 10kHz are increased by the frequency contouring.

The filter introduces phase shift. To assure correct addition of the filtered overshoot, a modular phase shift network, A1, (which has a flat amplitude response, but accurately matches the phase response of the sidechain filter throughout its passband) delays the input. A1 also has a summing input for the overshoot signal, which appears at the output of IC804b.

The time delay of this network is not constant at all frequencies, so the output of A1 is passed through all-pass network IC805a, R831, R832, R833, R834, C819, C820 to create constant time delay from the input of the overshoot compensator to its output. The all-pass network has a flat amplitude response, but frequency-dependent phase response. (This network is also designed to compensate for the non-constant group delay of the following third-order low-pass filter).

The output of IC805a is passed through a composite capacitor (made up of two aluminum electrolytics back-to-back, bypassed by a polycarbonate) to remove accumulated DC offsets. (This type of composite structure minimizes audible degradation caused by passing audio signals through polar capacitors which have high dielectric absorption.)

The signal passes through third-order active 10kHz low-pass filter IC805b, R836, R837, R838, R839, C822, C823, C824 to provide further reduction of any remaining out-of-band energy above 10kHz.

Finally, to eliminate any residual overshoots caused by very unusual waveforms, the signal is applied to safety clipper R840, SAFETY CLIPPER THRESHOLD trimmer R841, CR805, CR806. Because the basic overshoot corrector is *extremely* effective, the safety clipper is virtually never active (so no additional filtering is placed after its output). The output of the safety clipper is buffered by IC806a.

16. Balanced Line Amplifier, De-emphasis

Located on Card #7

The line amplifier is totally straightforward. It consists of a pair of inverting opamps. The feedback resistor of the first opamp can be shunted by a capacitor (selected by a plug-in jumper) to effect de-emphasis, if desired.

The second opamp is a unity-gain inverter driven by the first opamp. The outputs of the two opamps thus provide an output balanced to ground which is buffered by LT1010 power ICs to drive a non-overshooting EMI filter to interface to the outside world. The balanced driving capability of the circuit is >+20dBu into 300 ohms or greater. It can drive highly capacitive loads with absolute stability.

All manuals and user guides at all-guides.com

If option OPT-022 is installed in the 8101B, the gain of the line amplifier is reduced so the maximum output level is restricted to 4.5VRMS (+15.3dBu) into a balanced load. This is effected by the clipping system, which constrains the level into the line amplifier to 3.3VRMS (except when the LIMITER switch is set to PROOF (see OPT-022 note on page 4-11)).

17. Power Supplies

Mostly located on Card #PS

Most power for the 8101B circuitry comes from a highly regulated ±15-volt power supply. The main supply is +15 volts, controlled by a 723C IC regulator with current-boosted output, current limiting, and over-voltage protection using a zener diode and fast-blow fuse.

The −15-volt supply is essentially a current-boosted opamp in a unity-gain inverting configuration which "amplifies" and inverts the +15V supply, thus tracking it. The −15V supply is also current-limited and over-voltage protected. Both +15V and −15V supplies are located on a circuit board mounted on the inside of the rear chassis apron. This apron is also used as a heat sink for the regulator power transistors.

Bias supplies are required for the diode clippers in the audio processing. There are two such supplies: the first creates approximately ±1.2 volts (for Cards #3 and #4), while the second creates ±4.2 volts (for Cards #8 and #9). Both supplies employ a pair of opamps: the first is a unity-gain voltage-follower with a temperature-compensated voltage input created by a resistor/diode network; the second is a unity-gain inverter which creates the complementary negative voltage.

Component-level description:

The unregulated power supply (mounted inside the chassis, but outside of the RF-tight enclosure) is wholly conventional. It consists of dual-primary transformer T101, two full-wave rectifiers (CR101, CR102 and CR103, CR104), and two energy storage capacitors (C101 and C102).

T101's primary can be configured for 115-volt operation by paralleling its two primaries, or for 230-volt operation by connecting its two primaries in series. RF filtering is provided on the AC line by FL101. In addition, C103, C104, C105, C106, C107, L101, L102 filter VHF and UHF RF from the unregulated DC supply lines as they enter the chassis. The chassis is divided into three major sections to facilitate RF suppression. The section to the left (unregulated power supply chamber) contains the AC wiring and the unregulated power supply, and is assumed to contain some RF. The card cage, to the right, uses RF suppression on each line entering or leaving the area, and is thus free from RF. The RF shielding box on the rear panel, which interfaces the audio input and output lines with the outside world, contains the input pads — its connections to the main RF-tight compartment are all RF-filtered.

The +15-volt regulator (located on Card #PS) is the main reference for all other voltages in the 8101B. It employs 723C IC voltage regulator IC101 in conjunction with an external series-pass transistor Q101. This transistor is mounted on the rear apron of the chassis, which serves as a heat sink.

All manuals and user guides at all-guides.com

IC101 contains a reference voltage source, an opamp (externally compensated by C109 to prevent oscillation), and a current-limiting transistor. The reference voltage (nominally +7.15V) is developed at pin 6. C108 filters high-frequency noise from the reference voltage, which is directly connected to the non-inverting input (pin 5) of the internal opamp. Voltage divider R105, R106, R107 develops a precise fraction of the output voltage of the regulator at the wiper of +15V ADJUST trimmer R106. The wiper of R106 is connected to the inverting input of IC101's internal opamp. Negative feedback forces the voltage at R106's wiper to be equal to the reference voltage, so the output voltage of the regulator is always the reference voltage divided by the voltage divider gain.

The output current flowing through Q101 develops a voltage drop across R103. When the current exceeds approximately 3/4-amp, the voltage drop is sufficient to turn on the current-limiting transistor inside IC101. Since this transistor's base-emitter junction is connected to pins 2 and 3 of IC101, it then shunts base drive current from the external series-pass transistor Q101 and prevents damage due to overheating.

If a catastrophic failure in the +15-volt regulator causes it to lose control over its output voltage, the rest of the circuitry must be protected against the full unregulated voltage, or the entire system will be severely damaged. This protection is provided by zener diode VR101, CR105, and 1-amp fast-blow fuse F102. If the regulator loses control of the output voltage, VR101 will conduct and limit the output voltage to approximately 16.5 volts (which will not damage the system). Extremely large amounts of current will flow in VR101. Ordinarily, this current will blow F102 and disconnect the circuitry from the unregulated supply before VR101 is damaged. VR101's clamping action will also prevent the negative tracking supply from exceeding −16.5 volts. When the regulator is operating properly, the current-limiting circuitry will prevent F102 from blowing even if the regulator output is short-circuited. (In certain unusual circumstances, the current-limiting circuit may still work, even though the regulator has lost control of its output voltage. If this occurs, F102 will not blow, and VR101 will overheat and burn out. Because its failure mode is a short-circuit, VR101 will still protect the 8101B circuitry even in this exceptional circumstance.)

The −15-volt regulator (located on Card #PS) is an opamp that contains a discrete power-booster output stage with current-limiting. It "amplifies" the output of the +15-volt regulator by −1 to produce a −15-volt tracking supply. Shutdown of the +15-volt supply (due to current-limiting conditions or to a fault which blows F102) will also result in shutdown of the −15-volt supply. The basic opamp is IC102. Its input resistor R109 and feedback resistor R108 are of equal value, resulting in a gain of −1 ±2%. IC102's negative supply comes from the *unregulated* −22-volt supply. The common-mode range of IC102 includes its positive power supply, which permits operation with the chip's positive supply at ground. In normal operating conditions, the IC102's + input of IC102 is grounded, and its − input is within 10mV of ground.

Q103 and Q102 form a conjugate emitter-follower which can boost the output current of IC102 to more than 3/4-amp. The basic emitter-follower is Q103. Q102 is connected in a 100% negative feedback configuration to boost the current output capability of Q103.

Q104 is a current-limiting transistor. If the −15-volt supply is called upon to deliver more than 3/4-amp, a sufficient voltage drop (approximately 0.6 volts) will occur across R104 to turn on Q104, thus shunting drive current away from Q103 into the load and protecting Q102,Q103 from burn-out (IC102 is

All manuals and user guides at all-guides.com

Widely used common parts:

Diodes: Unless specified by reference designator in the following, all signal diodes are 1N4148 (Orban part number 22101-000). This is a silicon, small-signal diode with ultra-fast recovery and high conductance. It may also be replaced with 1N914 (BAY-61 in Europe). (BV: 75V min. @ I_r = 5µA, I_r: 25nA max. @ V_r = 20V, V_f: 1.0V max. @ I_f = 100mA, t_{rr}: 4ns max.)

Resistors: Resistors should only be replaced with the same style and with the *exact* value marked on the resistor body. If the value marking is not legible, check the the schematic or contact Orban Customer Service (see page 5-15). Performance and stability will be compromised if you do not use exact replacements.

Unless specified by reference designator in the following, the resistors in this unit are:

Metal film resistors (conformally-coated bodies, value identified with five color bands or printed on body) rated 1/8-watt @ 70°C, with a ±1% tolerance, and with a temperature coefficient of 100 PPM/°C; Orban part numbers 20038-xxx through 20045-xxx, USA Military Specification MIL-R-10509 style RN55D, manufactured by R-Ohm (CRB-1/4FX), TRW/IRC, Beyschlag, Dale, Corning, Matsushita,

Carbon film resistors (conformally-coated bodies, value identified with four color bands) rated 1/4-watt @ 70°C, with a tolerance of ±5%; Orban part numbers 20001-xxx, manufactured by R-Ohm (R-25), Piher, Beyschlag, Dale, Phillips, Spectrol, Matsushita,

Carbon composition resistors (molded phenolic bodies, value identified with four color bands) rated 1/4-watt for the 0.09 × 0.25-inch (2.3 × 6.4mm) size, and rated 1/8 watt for the 0.14 × 0.375-inch (3.6 × 9.5mm) size @ 70° C, with a tolerance of ±5%; Orban part numbers 2001x-xxx, USA Military Specification MIL-R-11 style RC-07 or RC-20, manufactured by Allen-Bradley, TRW/IRC, Matsushita,

Cermet trimmer resistors (3/8-inch (9mm) square bodies) value printed on side; rated 1/2-watt @ 70°C, with a tolerance of ±10%, and a temperature coefficient of 100 PPM/°C; Orban part numbers 20510-xxx and 20511-xxx, manufactured by Beckman (72P, 68W-series), Spectrol, Matsushita.

All manuals and user guides at all-guides.com

REF DES	DESCRIPTION	ORBAN P/N	VEN (1)	VENDOR P/N	ALTERNATE VENDORS(1)	NOTES
CARD #0/1						
Capacitors						
C1-4	Mica, 500V, 1%; 1000pF	21022-210	CD	CD19-FD102F03	SAN	
C5,6	Polypropylene, 50V, 1%; 0.01uF	21701-310	NOB	CQ15P1H103FPP	WES	
C7	Mica, 500V, 5%; 150pF	21020-115	CD	CD15-FD151J03	SAN	
C8	Mica, 500V, +1/2pF -1/2pF; 5pF	21017-005	CD	CD15-CD050D03	SAN	
C9	Met. Polyester, 100V, 5%; 0.47uF	21440-447	WES	160F 474J100	SIE,WIM	
C10	Mica, 500V, 5%; 100pF	21020-110	CD	CD15-FD101J03	SAN	
C11-14	Mica, 500V, 1%; 1000pF	21022-210	CD	CD19-FD102F03	SAN	
C15	Mica, 500V, 5%; 150pF	21020-115	CD	CD15-FD151J03	SAN	
C16	Mica, 500V, +1/2pF -1/2pF; 5pF	21017-005	CD	CD15-CD050D03	SAN	
C17	Met. Polyester, 100V, 5%; 0.47uF	21440-447	WES	160F 474J100	SIE,WIM	
C18	Mica, 500V, 5%; 100pF	21020-110	CD	CD15-FD101J03	SAN	
C19-21	Met. Polyester, 100V, 10%; 0.0047uF	21441-247	WES	60C 472K630	SIE, WIM	
C22	Mica, 500V, +1/2pF -1/2pF; 5pF	21017-005	CD	CD15-CD050D03	SAN	
C23	Mica, 500V, 1%; 1000pF	21022-210	CD	CD19-FD102F03	SAN	
C24	Mica, 500V, 5%; 470pF	21024-147	CD	CD19-FD471J03	SAN	
C25	Polypropylene, 50V, 1%; 0.01uF	21701-310	NOB	CQ15P1H103FPP	WES	
C26	Mica, 500V, 1%; 820pF	21022-182	CD	CD19-FD821F03	SAN	
C27	Polypropylene, 50V, 1%; 0.01uF	21701-310	NOB	CQ15P1H103FPP	WES	
C28	Mica, 500V, 1%; 220pF	21018-122	CD	CD15-FD221F03	SAN	
C29	Polypropylene, 50V, 1%; 0.01uF	21701-310	NOB	CQ15P1H103FPP	WES	
C30	Met. Polycarb., 100V, 2%; 0.1uF	21602-410	ECI	652A 1B104G	IMB	
C31,32	Polypropylene, 50V, 1%; 0.01uF	21701-310	NOB	CQ15P1H103FPP	WES	
C33,34	Alum., Radial, 25V, -20% +100%; 100uF	21206-710	PAN	ECE-A1EV101S		
C35-38	Monolythic Ceramic, 50V, 20%; 0.1uF	21123-410	SPR	1C25 Z5U104M050B	KEM	
Integrated Circuits						
IC1	Linear, Dual Opamp	24208-303	ORB	CA3280AG Selected		3
IC2	Linear, Single Opamp	24014-202	SIG	NE5534N	TI	
IC3	Multiplier	24705-202	RAY	RC4200NB		
IC4	Linear, Dual Opamp	24207-202	SIG	NE5532N	TI,EXR	
IC5	Linear, Dual Opamp	24206-202	TI	TL072CP	MOT	
IC6	Linear, Dual Opamp	24209-202	NAT	LF412CN		
IC7	Linear, Dual Opamp	24202-202	RAY	RC4558NB	MOT,FSC	
IC8-10	Linear, Dual Opamp	24209-202	NAT	LF412CN		
IC11	Linear, Dual Opamp	24208-303	ORB	CA3280AG Selected		3
IC12	Linear, Single Opamp	24014-202	SIG	NE5534N	TI	
IC13,14	Linear, Dual Opamp	24209-202	NAT	LF412CN		

FOOTNOTES:
(1) See last page for abbreviations
(2) No Alternate Vendors known at publication
(3) Actual part is specially selected from part listed, consult Factory
(4) Realignment may be required if replaced, see Circuit Description and/or Alignment Instructions

SPECIFICATIONS AND SOURCES FOR REPLACEMENT PARTS

OPTIMOD-FM Model 8101B
Card 0/1 - Capacitors, IC's

All manuals and user guides at all-guides.com

REF DES	DESCRIPTION	ORBAN P/N	VEN (1)	VENDOR P/N	ALTERNATE VENDORS(1)	NOTES
	Resistors					
R1,2	Resistor Set, MF; 20.5K	28521-008	ORB			3
R6,7	Resistor Set, MF; 20.5K	28521-008	ORB			3
R11,12	Resistor Set, MF; 20.5K	28521-008	ORB			3
R84,85	Resistor Set, MF; 20.5K	28521-008	ORB			3
R87,88	Resistor Set, MF; 20.5K	28521-008	ORB			3
	Transistors					
Q1	Transistor, Signal, NPN	23201-101	MOT	2N4123	FSC	
	CARD #3/4					
	Capacitors					
C301,302	Not Used	---				
C303	Met. Polycarb., 100V, 1%; 0.1uF	21601-410	ECI	652A 1B104F	IMB,SO	
C304,305	Met. Polycarb., 100V, 2%; 0.1uF	21602-410	ECI	652A 1B104G	IMB	
C306-308	Polypropylene, 50V, 2.5%; 0.01uF	21702-310	NOB	CQ15P1H103GPP	WES	
C309	Met. Polycarb., 100V, 2%; 0.12uF	21602-412	ECI	652A 1B124G	IMB	
C310	Mica, 500V, 5%; 150pF	21020-115	CD	CD15-FD151J03	SAN	
C311	Mica, 500V, +1/2pF -1/2pF; 5pF	21017-005	CD	CD15-CD050D03	SAN	
C312	Mica, 500V, +1/2pF -1/2pF; 10pF	21017-010	CD	CD15-CD100D03	SAN	
C313	Tantalum, 35V, 10%; 4.7uF	21307-547	SPR	196D 475X9035JA1	MANY	
C314	Met. Polycarb., 100V, 2%; 0.27uF	21602-427	ECI	652A 1B274G	IMB	
C315	Mica, 500V, 5%; 150pF	21020-115	CD	CD15-FD151J03	SAN	
C316	Mica, 500V, +1/2pF -1/2pF; 5pF	21017-005	CD	CD15-CD050D03	SAN	
C317	Mica, 500V, 5%; 100pF	21020-110	CD	CD15-FD101J03	SAN	
C318-320	Polypropylene, 50V, 2.5%; 0.01uF	21702-310	NOB	CQ15P1H103GPP	WES	
C321	Met. Polycarb., 100V, 2%; 0.1uF	21602-410	ECI	652A 1B104G	IMB	
C322	Met. Polyester, 100V, 10%; 1.0uF	21441-510	WIM	MKS-4100V5.1.0	WES,SIE	
C323-326	Monolythic Ceramic, 50V, 20%; 0.1uF	21123-410	SPR	1C25 Z5U104M050B	KEM	
C327,328	Alum., Radial, 25V, -20% +100%; 100uF	21206-710	PAN	ECE-A1EV101S		
C4xx	Subtract 100 and refer to C3xx series					

FOOTNOTES:
(1) See last page for abbreviations
(2) No Alternate Vendors known at publication
(3) Actual part is specially selected from part listed, consult Factory
(4) Realignment may be required if replaced, see Circuit Description and/or Alignment Instructions

SPECIFICATIONS AND SOURCES FOR REPLACEMENT PARTS

OPTIMOD-FM Model 8101B
Card 0/1 - Resistors, Transistors
Card 3/4 - Capacitors

all-guides.com

All manuals and user guides at all-guides.com

REF DES	DESCRIPTION	ORBAN P/N	VEN (1)	VENDOR P/N	ALTERNATE VENDORS(1)	NOTES
	Integrated Circuits					
IC301	Linear, Dual Opamp	24207-202	SIG	NE5532N	TI,EXR	
IC302,303	Linear, Dual Opamp	24206-202	TI	TL072CP	MOT	
IC304	Linear, Single Opamp	24014-202	SIG	NE5534N	TI	
IC305	Linear, Dual Opamp	24208-303	ORB	CA3280AG Selected		3
IC306	Linear, Dual Opamp	24206-202	TI	TL072CP	MOT	
IC307	Linear, Dual Opamp	24207-202	SIG	NE5532N	TI,EXR	
IC308	Linear, Single Opamp	24014-202	SIG	NE5534N	TI	
IC309	Linear, Dual Opamp	24208-303	ORB	CA3280AG Selected		3
IC310	Linear, Dual Opamp	24206-202	TI	TL072CP	MOT	
IC4xx	Subtract 100 and refer to IC3xx series					
	Resistors					
R309	Pot, Single; 25K, (5010R)	20742-000	ORB			10% CCW Log
R323,324	Resistor Set, MF; 20.0K	28521-001	ORB			3
R4xx	Subtract 100 and refer to R3xx series					
CARD #5						
	Capacitors					
C501	Ceramic Disc, 1KV, 20%; 0.0022uF	21113-222	CRL	DD-222	MUR,SPR	
C502,503	Alum., Radial, 63V; 1uF	21209-510	SPR	502D 105G063BBIC	PAN	
C504	Ceramic Disc, 1KV, 20%; 0.0022uF	21113-222	CRL	DD-222	MUR,SPR	
C505,506	Alum., Radial, 63V; 1uF	21209-510	SPR	502D 105G063BBIC	PAN	
C507	Alum., Radial, 63V; 2.2uF	21209-522	SPR	502D 225G063BB1C	PAN	
C508	Alum., Radial, 63V; 4.7uF	21209-547	SPR	502D 475G063BB1C	PAN	
C509	Met. Polyester, 100V, 10%; 0.1uF	21441-410	WIM	MKS-4100V5.0.1	WES,SIE	
C510	Ceramic Disc, 1KV, 10%; 0.001uF	21112-210	CRL	DD-102	MUR	
C511	Alum., Radial, 63V; 2.2uF	21209-522	SPR	502D 225G063BB1C	PAN	
C512,513	Alum., Radial, 25V, -20% +100%; 100uF	21206-710	PAN	ECE-A1EV101S		
C514-517	Monolythic Ceramic, 50V, 20%; 0.1uF	21123-410	SPR	1C25 Z5U104M050B	KEM	
C518	Alum., Radial, 63V; 1uF	21209-510	SPR	502D 105G063BBIC	PAN	

FOOTNOTES:
(1) See last page for abbreviations
(2) No Alternate Vendors known at publication
(3) Actual part is specially selected from part listed, consult Factory
(4) Realignment may be required if replaced, see Circuit Description and/or Alignment Instructions

SPECIFICATIONS AND SOURCES FOR REPLACEMENT PARTS

OPTIMOD-FM Model 8101B
Card 3/4 - IC's, Resistors
Card 5 - Capacitors

All manuals and user guides at all-guides.com

REF DES	DESCRIPTION	ORBAN P/N	VEN (1)	VENDOR P/N	ALTERNATE VENDORS (1)	NOTES
Integrated Circuits						
IC501	Linear, Single Opamp	24002-202	TI	UA741CN	RAY	
IC502	Multiple Discrete, TR. Pair	24407-101	INS	IT131		
IC503	Linear, Dual Opamp	24206-202	TI	TL072CP	MOT	
IC504,505	Multiple Discrete, TR. Array	24406-302	RCA	CA3096AE		
IC506	Linear, Single Opamp	24002-202	TI	UA741CN	RAY	
IC507	Multiple Discrete, TR. Pair	24407-101	INS	IT131		
IC508	Linear, Dual Opamp	24206-202	TI	TL072CP	MOT	
IC509,510	Multiple Discrete, TR. Array	24406-302	RCA	CA3096AE		
IC511	Linear, Single Opamp	24003-202	NAT	LM301AH	TI,RCA	
IC512	Linear, Dual Opamp	24202-202	RAY	RC4558NB	MOT,FSC	
IC513	Linear, Dual Opamp	24203-202	MOT	MC1458CP1	TI,RCA	
IC514	Linear, Dual Opamp	24202-202	RAY	RC4558NB	MOT,FSC	
Modules						
A1	Module Assy, Master Release Time	30745-001-xx*	ORB			*Add suffix printed on part
A2	Module Assy, Bass Release Time I	30745-002-xx*	ORB			*Add suffix printed on part
Resistors						
R509	Pot, Single; 1 Meg, (5020)	20737-000	ORB			20% CW Log
R521	Pot, Single; 5K, (5050)	20735-000	ORB			Linear
R537	Pot, Single; 100K, (5020R)	20736-000	ORB			20% CCW Log
R542	Pot, Single; 5K, (5050)	20735-000	ORB			Linear
Switches						
S501	Switch, Toggle, Min., SPDT	26041-102	CK	7101SYABE		
Transistors						
Q501,502	Transistor, JFET/P	23407-101	NAT	J174	SIL	
Q503-506	Transistor, Signal, NPN	23201-101	MOT	2N4123	FSC	

FOOTNOTES:
(1) See last page for abbreviations
(2) No Alternate Vendors known at publication
(3) Actual part is specially selected from part listed, consult Factory
(4) Realignment may be required if replaced, see Circuit Description and/or Alignment Instructions

SPECIFICATIONS AND SOURCES FOR REPLACEMENT PARTS

OPTIMOD-FM Model 8101B
Card 5 - IC's, Modules, Resistors, Switches, Transistors

All manuals and user guides at all-guides.com

REF DES	DESCRIPTION	ORBAN P/N	VEN (1)	VENDOR P/N	ALTERNATE VENDORS (1)	NOTES
CARD #6						
Capacitors						
C601,602	Mica, 500V, 1%; 1000pF	21022-210	CD	CD19-FD102F03	SAN	
C603	Polypropylene, 50V, 2.5%; 0.047uF	21702-347	NOB	CQ15P1H473GPP		Europe 50us
C603	Polypropylene, 50V, 2.5%; 0.01uF	21702-310	NOB	CQ15P1H103GPP	WES	North America 75us
C604	Mica, 500V, 1%; 100pF	21018-110	CD	CD15-FD101F03	SAN	Europe 50us
C604	Mica, 500V, 1%; 150pF	21018-115	CD	CD15-FD151F03	SAN	North America 75us
C605	Mica, 500V, 1%; 1000pF	21022-210	CD	CD19-FD102F03	SAN	
C606	Mica, 500V, 1%; 220pF	21018-122	CD	CD15-FD221F03	SAN	
C607,608	Mica, 500V, 1%; 1000pF	21022-210	CD	CD19-FD102F03	SAN	
C609	Mica, 500V, 5%; 1800pF	21024-218	CD	CD19-FD182J03	SAN	
C610	Met. Polycarb., 100V, 10%; 1.0uF	21604-510	ECI	652A 1B105K	IMB	
C611	Polypropylene, 50V, 2.5%; 0.01uF	21702-310	NOB	CQ15P1H103GPP	WES	
C612	Met. Polyester, 100V, 10%; 0.047uF	21441-347	WES	60C 473K250	SIE	
C613,614	Mica, 500V, 1%; 1000pF	21022-210	CD	CD19-FD102F03	SAN	
C615	Polypropylene, 50V, 2.5%; 0.047uF	21702-347	NOB	CQ15P1H473GPP		Europe 50us
C615	Polypropylene, 50V, 2.5%; 0.01uF	21702-310	NOB	CQ15P1H103GPP	WES	North America 75us
C616	Mica, 500V, 1%; 100pF	21018-110	CD	CD15-FD101F03	SAN	Europe 50us
C616	Mica, 500V, 1%; 150pF	21018-115	CD	CD15-FD151F03	SAN	North America 75us
C617	Mica, 500V, 1%; 1000pF	21022-210	CD	CD19-FD102F03	SAN	
C618	Mica, 500V, 1%; 220pF	21018-122	CD	CD15-FD221F03	SAN	
C619,620	Mica, 500V, 1%; 1000pF	21022-210	CD	CD19-FD102F03	SAN	
C621	Mica, 500V, 5%; 1800pF	21024-218	CD	CD19-FD182J03	SAN	
C622	Met. Polycarb., 100V, 10%; 1.0uF	21604-510	ECI	652A 1B105K	IMB	
C623	Polypropylene, 50V, 2.5%; 0.01uF	21702-310	NOB	CQ15P1H103GPP	WES	
C624	Met. Polyester, 100V, 10%; 0.047uF	21441-347	WES	60C 473K250	SIE	
C625	Tantalum, 35V, 10%; 1uF	21307-510	SPR	196D 105X9035HA1	MANY	
C626,627	Alum., Radial, 25V, -20% +100%; 100uF	21206-710	PAN	ECE-A1EV101S		
C628-31	Monolythic Ceramic, 50V, 20%; 0.1uF	21123-410	SPR	1C25 Z5U104M050B	KEM	
C632,633	Alum., Radial, 25V, -20% +100%; 100uF	21206-710	PAN	ECE-A1EV101S		
C634,635	Monolythic Ceramic, 50V, 20%; 0.1uF	21123-410	SPR	1C25 Z5U104M050B	KEM	
C636	Tantalum, 35V, 10%; 1uF	21307-510	SPR	196D 105X9035HA1	MANY	
Diodes						
CR604	Diode, Signal, Hot Carrier	22102-001	HP	HP5082-2800		

FOOTNOTES:
(1) See last page for abbreviations
(2) No Alternate Vendors known at publication
(3) Actual part is specially selected from part listed, consult Factory
(4) Realignment may be required if replaced, see Circuit Description and/or Alignment Instructions

SPECIFICATIONS AND SOURCES FOR REPLACEMENT PARTS

OPTIMOD-FM Model 8101B
Card 6 - Capacitors, Diodes

All manuals and user guides at all-guides.com

REF DES	DESCRIPTION	ORBAN P/N	VEN (1)	VENDOR P/N	ALTERNATE VENDORS (1)	NOTES
	Resistors					
R701	Trimpot, Cermet, 20 Turn; 25K	20512-325	BEK	89PR25K	BRN	
R708	Trimpot, Cermet, 20 Turn; 25K	20512-325	BEK	89PR25K	BRN	
CARD #8/9						
	Capacitors					
C801	Mica, 500V, 1%; 100pF	21018-110	CD	CD15-FD101F03	SAN	
C802	Mica, 500V, 1%; 1000pF	21022-210	CD	CD19-FD102F03	SAN	
C803	Mica, 500V, 1%; 160pF	21018-116	CD	CD15-FD161F03	SAN	
C804	Mica, 500V, 1%; 1000pF	21022-210	CD	CD19-FD102F03	SAN	
C805	Mica, 500V, 1%; 2400pF	21022-224	CD	CD19-FD242F03	SAN	
C806	Mica, 500V, 1%; 560pF	21022-156	CD	CD19-FD561F03	SAN	
C807	Mica, 500V, 1%; 2700pF	21022-227	CD	CD19-FD272F03	SAN	
C808-810	Mica, 500V, 1%; 1000pF	21022-210	CD	CD19-FD102F03	SAN	
C811	Mica, 500V, 1%; 220pF	21018-122	CD	CD15-FD221F03	SAN	
C812	Mica, 500V, 1%; 1000pF	21022-210	CD	CD19-FD102F03	SAN	
C813	Mica, 500V, 1%; 100pF	21018-110	CD	CD15-FD101F03	SAN	
C814	Mica, 500V, 1%; 220pF	21018-122	CD	CD15-FD221F03	SAN	
C815	Polypropylene, 50V, 2.5%; 0.022uF	21702-322	NOB	CQ15P1H223GPP	WES	
C816	Mica, 500V, 1%; 2700pF	21022-227	CD	CD19-FD272F03	SAN	
C817	Polypropylene, 50V, 2.5%; 0.0075uF	21702-275	NOB	CQ15P1H752GPP	WIM,WES	
C818	Mica, 500V, 1%; 2400pF	21022-224	CD	CD19-FD242F03	SAN	
C819,820	Mica, 500V, 1%; 1000pF	21022-210	CD	CD19-FD102F03	SAN	
C821	Met. Polycarb., 100V, 10%; 1.0uF	21604-510	ECI	652A 1B105K	IMB	
C822,823	Mica, 500V, 1%; 1000pF	21022-210	CD	CD19-FD102F03	SAN	
C824	Mica, 500V, +1/2pF -1/2pF; 41pF	21017-041	CD	CD15-CD410D03	SAN	
C825	Tantalum, 35V, 10%; 0.47uF	21307-447	SPR	196D 474X9035HA1	MANY	
C826	Met. Polyester, 100V, 10%; 0.0033uF	21441-233	WES	60C 332K1000	SIE, WIM	
C827,828	Alum., Radial, 25V, -20% +100%; 100uF	21206-710	PAN	ECE-A1E[illegible]01S		
C829-832	Monolythic Ceramic, 50V, 20%; 0.1uF	21123-410	SPR	1C25 Z5U104M050B	KEM	
C833	Tantalum, 35V, 10%; 1uF	21307-510	SPR	196D 105X9035HA1	MANY	
C834,835	Alum., Radial, 63V; 100uF	21209-710	SPR	502D 107G063DG1C	PAN	
C9xx	Subtract 100 and refer to C8xx series					
	Diodes					
CR803-806	Diode, Signal, Hot Carrier	22102-001	HP	HP5082-2800		
CR9xx	Subtract 100 and refer to CR8xx series					

FOOTNOTES:
(1) See last page for abbreviations
(2) No Alternate Vendors known at publication
(3) Actual part is specially selected from part listed, consult Factory
(4) Realignment may be required if replaced, see Circuit Description and/or Alignment Instructions

SPECIFICATIONS AND SOURCES FOR REPLACEMENT PARTS

OPTIMOD-FM Model 8101B
Card 7 - Resistors
Card 8/9 - Capacitors, Diodes

All manuals and user guides at all-guides.com

REF DES	DESCRIPTION	ORBAN P/N	VEN (1)	VENDOR P/N	ALTERNATE VENDORS (1)	NOTES
Inductors						
L801,802	Inductor, Variable	29702-004	ORB			
L803	Inductor, Variable	29702-003	ORB			
L804	Inductor, Variable	29702-002	ORB			
L805	Inductor, Variable	29701-002	ORB			
L9xx	Subtract 100 and refer to L8xx series					
Integrated Circuits						
IC801-806	Linear, Dual Opamp	24206-202	TI	TL072CP	MOT	
IC807	Multiple Discrete, TR. Array	24406-302	RCA	CA3096AE		
IC808	Linear, Dual Opamp	24206-202	TI	TL072CP	MOT	
IC9xx	Subtract 100 and refer to IC8xx series					
Modules						
A1	Module Assy, Phase Delay Network	30485-001-xx*	ORB			*Add suffix printed on part
A2	Module Assy, Distortion Cancel	30490-001-xx*	ORB			*Add suffix printed on part
CHASSIS (FRONT PANEL)						
LED's						
NONE	LED, Green	25104-000	GI	MV-5253		"POWER"
NONE	LED, Yellow	25105-000	GI	MV-5353		HF LIMIT "LEFT" "RIGHT"
NONE	LED, Red	25103-000	GI	MV-5053		"GATE"
Meters						
M1	Meter, Edge, 1mA, Cream/Black, 0 to 25	28009-104	EMI	132D5		950 Ohms
M2	Meter, Edge, 1mA, Cream/Black, 0 to 5	28009-105	EMI	132D5		950 Ohms
M3	Meter, Edge, 1mA, Cream/Black, 0 to 25	28009-104	EMI	132D5		950 Ohms
M4	Meter, Edge, 1mA, Cream/Black, 0 to 30	28009-102	EMI	132D5		950 Ohms
M5	Meter, VU, Brown/Tan	28002-007	DIX	330T	HOYT	
CHASSIS (POWER SUPPLY)						
Capacitors						
C101,102	Alum., Electrolytic, 40V; 5000uF	21250-850	CD	FAH-5000-40-A2	MAL	
C103,104	Ceramic Disc, 50V, 20%; 0.05uF	21107-350	CRL	UK50-503	MUR	
C105-107	Ceramic, Feed-thru, 1000pF	21118-210	ERE	2404-000	MUR	
Diodes						
CR101-104	Diode, Rectifier, 400V, 3A	22203-400	MOT	MR504		

FOOTNOTES:
(1) See last page for abbreviations
(2) No Alternate Vendors known at publication
(3) Actual part is specially selected from part listed, consult Factory
(4) Realignment may be required if replaced, see Circuit Description and/or Alignment Instructions

SPECIFICATIONS AND SOURCES FOR REPLACEMENT PARTS

OPTIMOD-FM Model 8101B

Card 8/9 - Inductors, IC's, Modules
Front Panel - LED's, Meters
Power Supply - Capacitors, Diodes

All manuals and user guides at all-guides.com

REF DES	DESCRIPTION	ORBAN P/N	VEN (1)	VENDOR P/N	ALTERNATE VENDORS (1)	NOTES
	Inductors					
L101,102	Inductor, RF Choke, 7uH	29501-004	OHM	Z-50	(2)	
	Miscellaneous					
F101	Fuse, 3AG, Slo-Blo, 1/2A	28004-150	LFE	313.500	BUS	North America 115V
F101	Fuse, 3AG, Slo-Blo, 1/4A	28004-125	LFE	313.250	BUS	Europe 230V
T101	Transformer, Power; 38VCT, 46VA	55002-000	ORB			
	Switches					
S101	Switch, Rocker, Power, DPST	26003-001	MAR	1802-0111		
S102	Switch, Slide, Mains voltage selector	26140-000	SW	EPSI-SLI		
CHASSIS (REAR PANEL)						
	Capacitors					
C1-14	Ceramic, Feed-thru, 1000pF	21118-210	ERE	2404-000	MUR	
	Miscellaneous					
FL101	Filter, Line, 3 Amp	28015-000	COR	3EF1	MANY	
INPUT FILTER						
	Capacitors					
C1-4	Ceramic Disc, 1KV, 10%; 0.0015uF	21112-215	CRL	DD-152	MUR	
	Inductors					
L1-4	Inductor, RF Choke, 1.2mH	29503-000	MIL	73F123AF		
L5-9	Inductor, RF Choke, 7uH	29501-004	OHM	Z-50	(2)	
METER RESISTOR						
	Resistors					
R5,6	Trimpot, Cermet; 2K	20509-220	BEK	72XR2K	BRN	

FOOTNOTES:
(1) See last page for abbreviations
(2) No Alternate Vendors known at publication
(3) Actual part is specially selected from part listed, consult Factory
(4) Realignment may be required if replaced, see Circuit Description and/or Alignment Instructions

SPECIFICATIONS AND SOURCES FOR REPLACEMENT PARTS

OPTIMOD-FM Model 8101B

Power Supply - Inductors, Misc, Switches
Rear Panel - Capacitors, Misc, Transistors
Input Filter - Capacitors, Inductors
Meter Resistor - Resistors

All manuals and user guides at all-guides.com

REF DES	DESCRIPTION	ORBAN P/N	VEN (1)	VENDOR P/N	ALTERNATE VENDORS (1)	NOTES
	Switches					
S2	Switch, Rotary, 1P12T	26078-306	CTS	212-Series		
OTHER						
	Miscellaneous					
NONE	Line Cord	28102-002	BEL	17500	MANY	
NONE	PCB Extender II, Board Assy	30705-000				
POWER SUPPLY BOARD						
	Capacitors					
C108	Tantalum, 10V, 10%; 33uF	21303-633	SPR	196D 336X9010KE3	MANY	
C109	Mica, 500V, 5%; 470pF	21024-147	CD	CD19-FD471J03	SAN	
C110	Not Used	---				
C111,112	Alum., Radial, 50V; 47uF	21208-647	SPR	502D 476G050CD1C	PAN	
C113	Mica, 500V, 5%; 100pF	21020-110	CD	CD15-FD101J03	SAN	
C114	Polyester, 100V, 10%; 0.01uF	21401-310	SPR	225P 10391WD3	PAN,PAK	
	Diodes					
CR105,106	Diode, Rectifier, 400V, 1A	22201-400	MOT	1N4004	MANY	
VR101,102	Diode, Zener, 5W; 16V, 5%	22005-160	MOT	1N5353B	MANY	
	Integrated Circuits					
IC101	D.C. Regulator	24301-302	NAT	LM723CN		
IC102	Linear, Single Opamp	24003-202	NAT	LM301AH	TI,RCA	
	Miscellaneous					
F102,103	Fuse, Pico, 1A, Axial	28011-210	LFE	275001	BUS	
	Resistors					
R103,104	Resistor, Wirewound, 2W, 0.62 OHM; 5%	20028-862	IRC	BWF Series		
R106	Trimpot, Cermet, 18 Turn; 500 OHM	20508-150	BEK	68XR500	BRN	
R108,109	Resistor Set, MF; 20.5K	28521-008	ORB			3
	Transistors					
Q101,102	Transistor, Power, NPN; TO-3	23601-501	RCA	2N3055	MANY	Located on Chassis Rear Panel
Q103,104	Transistor, Signal, PNP	23002-101	MOT	2N4402	FSC	

FOOTNOTES:
(1) See last page for abbreviations
(2) No Alternate Vendors known at publication
(3) Actual part is specially selected from part listed, consult Factory
(4) Realignment may be required if replaced, see Circuit Description and/or Alignment Instructions

SPECIFICATIONS AND SOURCES FOR REPLACEMENT PARTS
OPTIMOD-FM Model 8101B
Meter Resistor - Switches
Other - Misc
Power Supply Board - Capacitors, Diodes, IC's, Misc, Resistors, Transistors

All manuals and user guides at all-guides.com

AB Allen-Bradley Co., Inc.
1201-T South Second Street
Milwaukee, WI 53204

AD Analog Devices, Inc.
One Technology Way
PO Box 9106
Norwood, MA 02062-9106

AKG AKG Acoustics, Inc.
1525 Alvarado Street
San Leandro, CA 94577

AM Amphenol Corporation
358 Hall Avenue
Wallingford, CT 06492

BEK Beckman Industrial Corporation
4141 Palm Street
Fullerton, CA 92635-1025

BEL Belden Electronic Wire & Cable
PO Box 1980
Richmond, IN 47374

BRN Bourns, Inc
Resistive Components Group
1200 Columbia Avenue
Riverside, CA 92507

BUS Bussmann Division
Cooper Industries
PO Box 14460
St. Louis, MO 63178

CD Cornell-Dubilier Elec.
1700 Rte. 23 North
Wayne, NJ 07470

CRL Mepcopal/Centralab
See Mepcopal

CSC Crystal Semiconductor Corporation
4210-T. South Industrial Dr.
Austin, TX 78744

CTS CTS Corporation
907 North West Blvd.
Elkhart, IN 46514

CW CW Industries
130 James Way
Southampton, PA 18966

DBX dbx
A division of AKG Acoustics, Inc.
1525 Alvarado Street
San Leandro, CA 94577

DEL Delta Products Corp
361 Fairview Way
Milpitas, CA 95035

DUR Duracell, Inc.
Berkshire Industrial Park
Bethel, CT 06801

ELSW Electro Switch
77 King Avenue
Weymouth, MA 02188

EMI Emico Inc.
123 Main Street
Dublin, PA 18917

EXR Exar Corporation
2222 Qume Dr.
PO Box 49007
San Jose, CA 95161-9007

FR Fair-Rite Products Corp.
PO Box J
Wallkill, NY 12589

FSC Fairchild Camera & Instr. Corp.
See National Semiconductor

GI General Instruments
Optoelectronics Division
See Quality Technologies

HA Harris Semiconductor
2460 N 1st Street
Suite 200
San Jose, CA 95131-0124

HO Hoyt Elect. Inst. Works
19 Linden St.
Penacook, NH 03303

HP Hewlett-Packard Co.
Components Group
640 Page Mill Road
Palo Alto, CA 94304

INS Intersil, Inc.
See Harris Semiconductor

ITW ITW Switches
An Illinois Tool Works Co.
6615 W. Irving Park Rd.
Dept. T
Chicago, IL 60634

KEM KEMET Electronics Corporation
Post Office Box 5928
Greenville, South Carolina 29606

KEY Keystone Electronics Corp.
31-07 20th Rd.
Astoria, NY 11105

LFE Littlefuse
A Subsidiary of Tracor, Inc.
800 E. Northwest Hwy
Des Plaines, IL 60016

LT Linear Technology Corp.
1630 McCarthy Blvd.
Milpitas, CA 95035

LUMX Lumex Opto/Components Inc.
292 E. Hellen Road
Palatine, IL 60067

MAL Mallory Capacitor Co.
Emhart Electrical/Electronic Gr.
4760 Kentucky Ave
Indianapolis, IN 46241

MAR Marquardt Switches, Inc.
2711-TR Route 20 East
Cazenovia, NY 13035

MAT Matsushita Electric Corp of America
One Panasonic Way
Secaucus, NJ 07094

ME Mepcopal/Centralab
A North American Phillips Corp.
11468 Sorrento Valley Road
San Diego, CA 92121

MID Hollingsworth/Wearnes
Hollingsworth Solderless Terminal Div.
357 Beloit Street
Burlington, WI 53105

MIL J.W. Miller Division
Bell Industries
306 E. Alondra
Gardenia, CA 90247

MOT Motorola Semiconductor
PO Box 20912
Phoenix, AZ 85036

MUR Murata Erie North America
2200 Lake Park Drive
Smyrna, GA 30080

NAT National Semiconductor Corp.
2900 Semiconductor Drive
PO Box 58090
Santa Clara, CA 95051

NEL NEL Frequency Controls, Inc.
357 Beloit Street
Burlington, WI 53105

NOB Noble U.S.A., Incorporated
5450 Meadowbrook Industrial Ct.
Rolling Meadows, IL 60008

OKI OKI Semiconductor
785 N. Mary Ave.
Sunnyvale, CA 94086-2909

OHM Ohmite Manufactoring Company
3601 Howard Street
Skokie, IL 60076

ORB Orban
A division of AKG Acoustics, Inc.
1525 Alvarado Street
San Leandro, CA 94577

PAN Panasonic Industrial Company
Two Panasonic Way
7E-2T
Secaucus, NJ 07094

QT Quality Technologies, Inc.
610 North Mary Ave.
Sunnyvale, CA 94086

RAL Raltron Electronics Corp.
9550 Warner Ave.
Fountain Valley, CA 92708

RAY Raytheon Company
Semiconductor Division
350 Ellis Street
Mountain View, CA 94039

RCA RCA Solid State
See Harris Semiconductor

ROHM Rohm Corporation
8 Whatney
Irvine, CA 92718

SAE Stanford Applied Engineering, Inc
340 Martin Avenue
Santa Clara, CA 95050

SAN Sangamo Weston Inc.
Capacitor Division
See Cornell-Dubilier

SCH ITT Schadow, Inc.
8081 Wallace Road
Eden Prairie, MN 55344

SIE Siemens Components Inc.
Heimann Systems Div.
186 Wood Avenue South
Iselin, NJ 08830

SIG Philips Components - Signetics
North American Phillips Corp.
811 E. Arques
Sunnyvale, CA 94088

SPR Sprague Electric Co.
41 Hampden Road
PO Box 9102
Mansfield, MA 02048-9102

SW Switchcraft
A Raytheon Company
5555 N. Elston Avenue
Chicago, IL 60630

TAI Taiyo America, Inc.
700 Frontier Way
Bensenville, IL 60106

TDK TDK Electronics Corporation
12 Harbor Park
Port Washington, NY 11050

TI Texas Instruments, Inc.
PO Box 225012
Dallas, TX 75265

TOS Toshiba America, Inc.
9740 Irvine Blvd.
Irvine, CA 92718

TRW TRW Electronics Components
Connector Division
1501 Morse Avenue
Elk Grove Village, IL 60007

VARO Varo Semiconductor, Inc.
PO Box 469013
Garland, TX 75046-9013

WES Westlake
See Mallory Capacitor Co.

WIM The Inter-Technical Group Inc.
Wima Division
PO Box 23
Irvington, NY 10533

ZI ZILOG Inc.
210 Hacienda Ave.
Campbell, CA 95008

Vendor Codes

All manuals and user guides at all-guides.com

Notes:

All manuals and user guides at all-guides.com

Schematics, Assembly Drawings

The following drawings are included in this manual:

Page	Card #	Function	Drawing
6-42		**BLOCK DIAGRAM**	
6-44		**Motherboard**	Assembly Drawing
6-45		**Accessory Port**	Wiring Diagram
6-46		**Input Filter**	Assembly Drawing Schematic
6-47		**Meter Resistor**	Assembly Drawing Schematic
6-48		**Raw DC Section**	Assembly Drawing Schematic
6-49	PS	**Power Supply**	Assembly Drawing Schematic
6-50 6-51	0, 1	**Hilbert Transform Clipper**	Assembly Drawing Schematic
6-52 6-53	3, 4	**Compressors**	Assembly Drawing Schematic
6-54 6-55	5	**Audio Control**	Assembly Drawing Schematic
6-56 6-57	6	**High-frequency Limiter**	Assembly Drawing Schematic
6-58 6-59	7	**Output**	Assembly Drawing Schematic
6-60 6-61	8, 9	**Filter, FCS Overshoot Compensator**	Assembly Drawing Schematic

These drawings reflect the actual construction of your unit as accurately as possible. Any differences between the drawings and your unit are almost undoubtedly due to product improvements or production changes since the publication of this manual. Major changes are described in addenda located at the front of this manual.

If you intend to replace parts, please read page 6-27.

all-guides.com

All manuals and user guides at all-guides.com

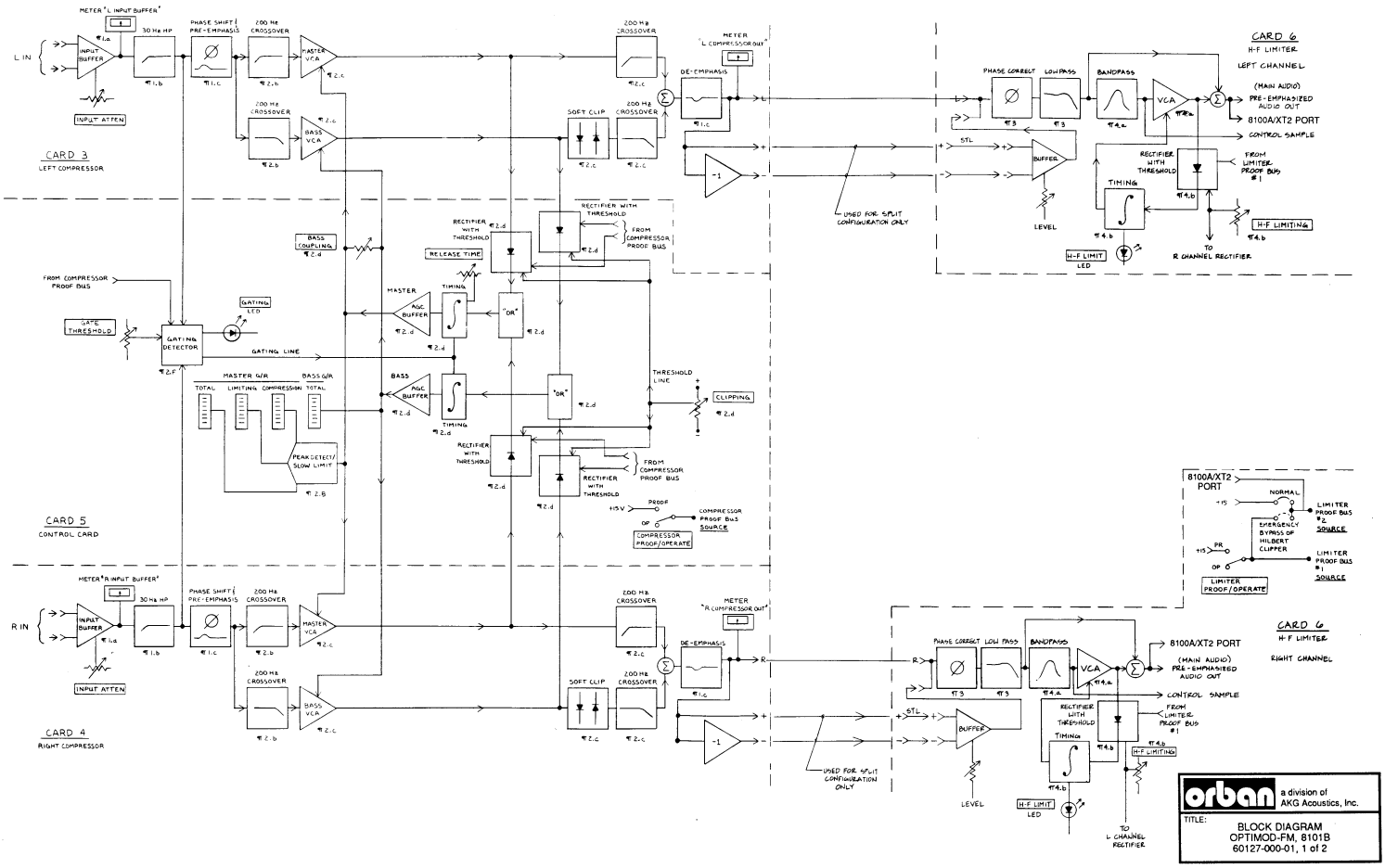

orban a division of AKG Acoustics, Inc.

TITLE: BLOCK DIAGRAM OPTIMOD-FM, 8101B 60127-000-01, 1 of 2

All manuals and user guides at all-guides.com

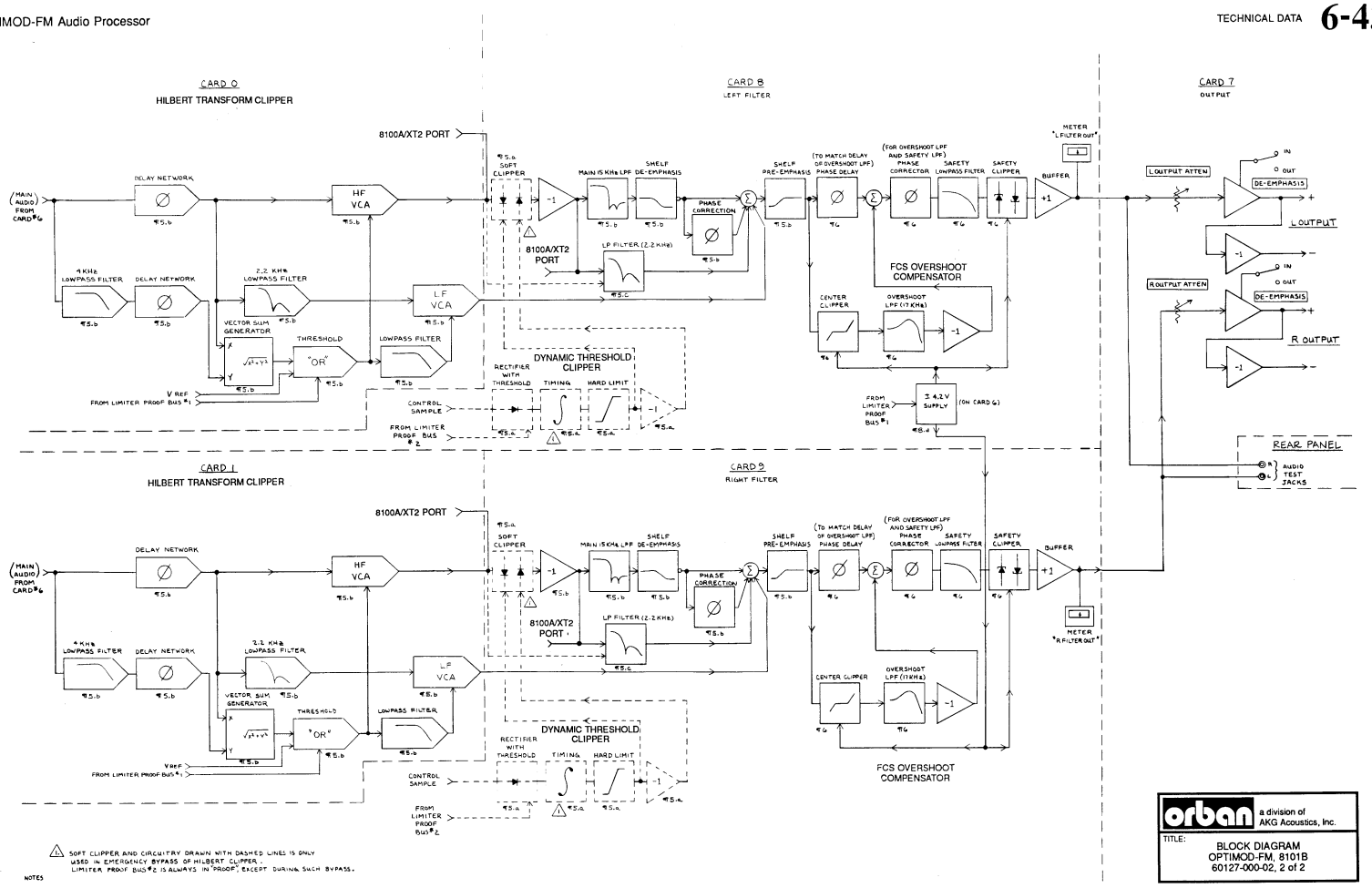

⚠ SOFT CLIPPER AND CIRCUITRY DRAWN WITH DASHED LINES IS ONLY USED IN EMERGENCY BYPASS OF HILBERT CLIPPER. LIMITER PROOF BUS #2 IS ALWAYS IN "PROOF", EXCEPT DURING SUCH BYPASS.

NOTES

orban a division of AKG Acoustics, Inc.

TITLE: BLOCK DIAGRAM
OPTIMOD-FM, 8101B
60127-000-02, 2 of 2

All manuals and user guides at all-guides.com

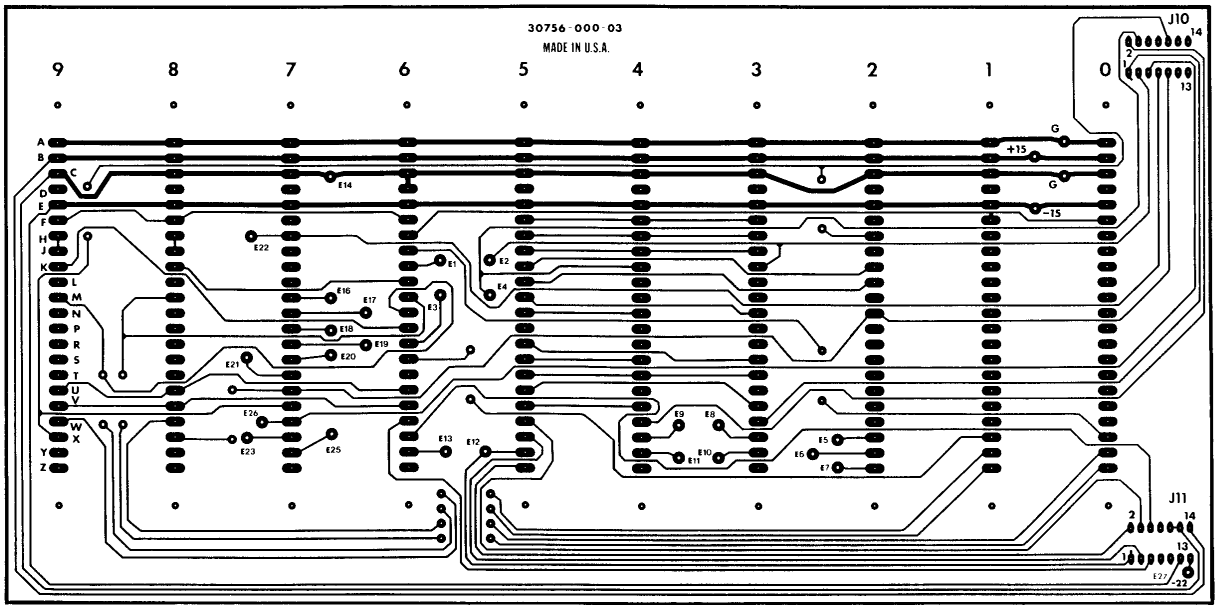

SOLDER SIDE

orban a division of AKG Acoustics, Inc.

TITLE:
ASSEMBLY DRAWING
MOTHERBOARD
30756-000-03

All manuals and user guides at all-guides.com

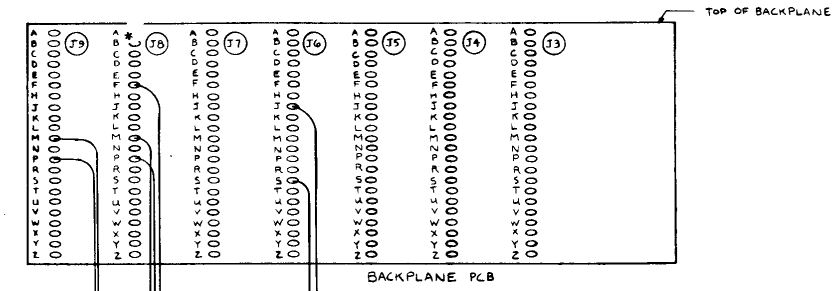

WIRE SCHEDULE					
FROM	TO	FUNCTION	COLOR	LENGTH	WIRE
AP-1	AP-14	15V PROOF	—	.25 IN	BUSWIRE
AP-2	AP-15	+15V	—	.25 IN	"
AP-3	AP-16	−15V	—	.25 IN	"
AP-4	AP-17	CHASSIS GND	—	.25 IN	"
AP-5	AP-18	DIRTY GND	—	.25 IN	"
AP-6	AP-19	CLEAN GND	—	.25 IN	"
AP-12	J9-M	R15 KHz FILTER	BLK	14.5 IN	INSULATED
AP-13	J9-P	R2.2 KHz FILTER	WHT	14.5 IN	"
AP-14	J8-F	15V PROOF	VIO	15.5 IN	"
AP-15	PS-6	+15V	BLU	9 IN	"
AP-16	PS-8	−15V	GRY	7.5 IN	"
AP-17	GND LUG	CHASSIS GND	BLK	2.5 IN	"
AP-18	PS-7	DIRTY GND	BLK	7.5 IN	"
AP-19	PS-7	CLEAN GND	BRN	7.5 IN	"
AP-20	J6-J	L LIMITER OUT	WHT	12.5 IN	"
AP-21	J6-S	R LIMITER OUT	GRY	12 IN	"
AP-22	J8-M	L 15 KHz FILTER	RED	14 IN	"
AP-23	J8-P	L 2.2 KHz FILTER	ORN	14 IN	"

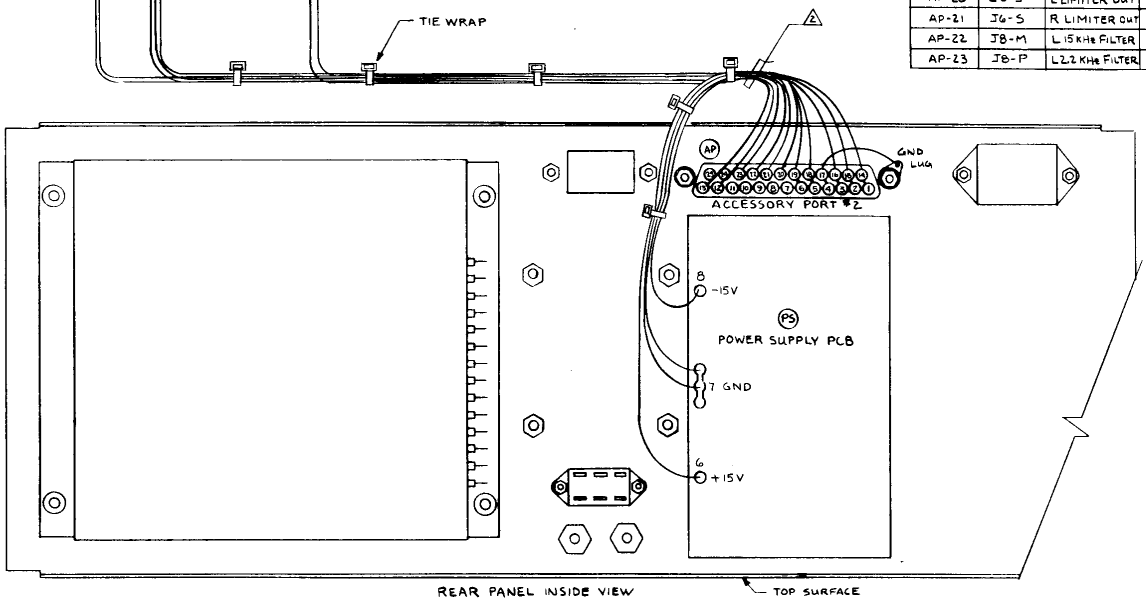

orban a division of AKG Acoustics, Inc.

TITLE: WIRING DIAGRAM
ACCESSORY PORT #2
60133-000-04

All manuals and user guides at all-guides.com

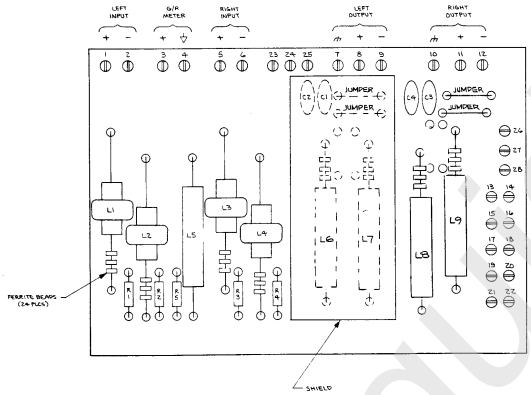

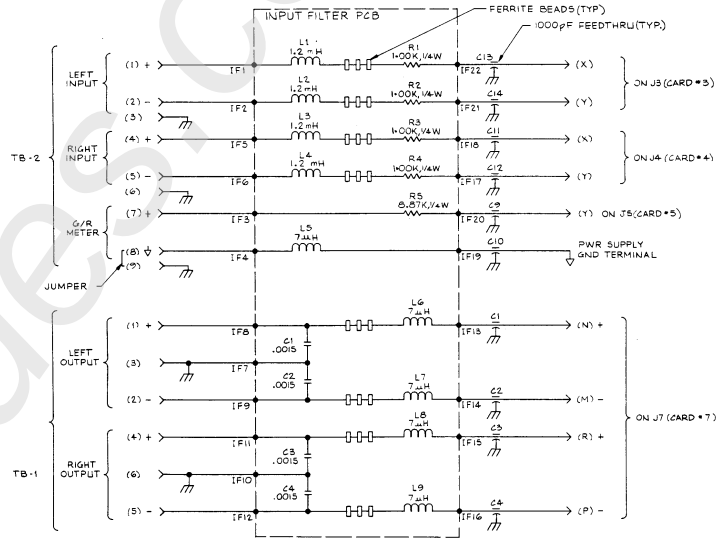

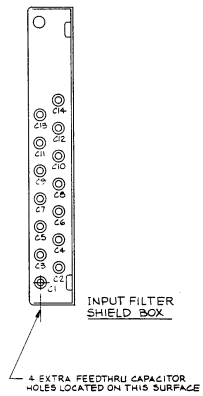

orban a division of AKG Acoustics, Inc.
TITLE: ASSEMBLY DRAWING INPUT FILTER 30790-000-01

orban a division of AKG Acoustics, Inc.
TITLE: SCHEMATIC INPUT FILTER 61014-000-01

all-guides.com

All manuals and user guides at all-guides.com

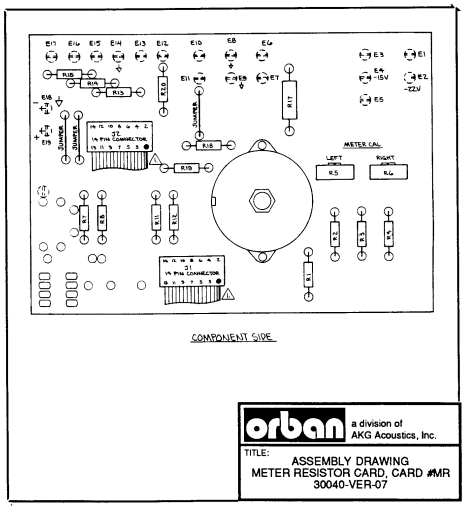

orban a division of AKG Acoustics, Inc.

TITLE:
ASSEMBLY DRAWING
METER RESISTOR CARD, CARD #MR
30040-VER-07

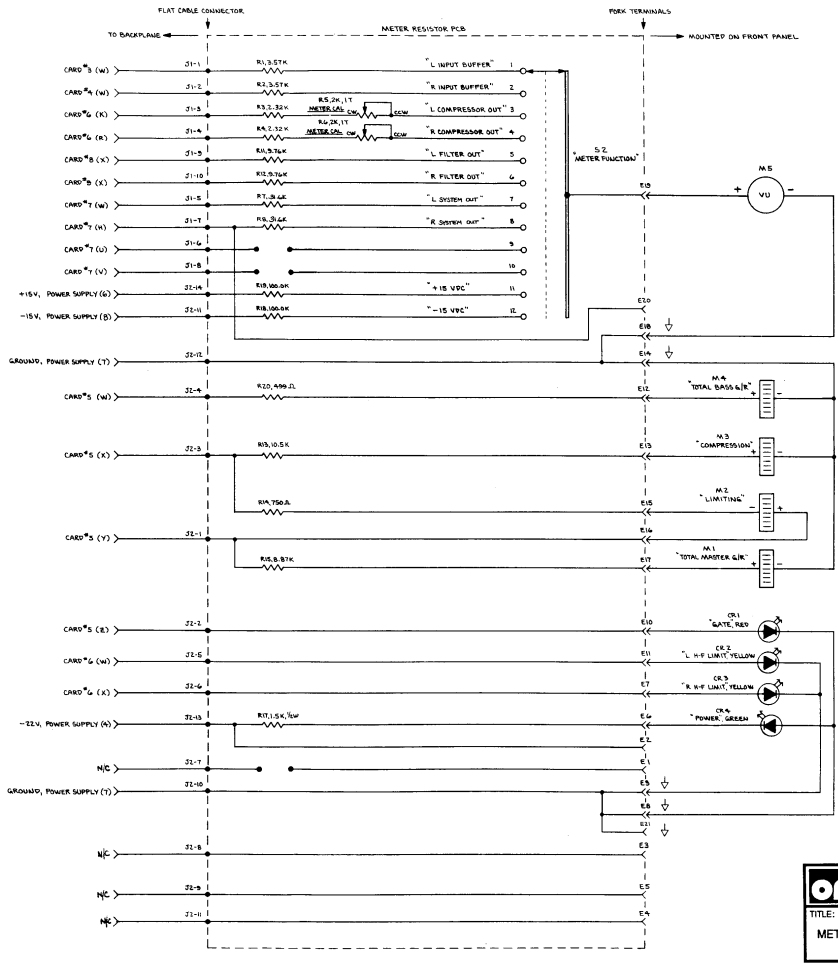

orban a division of AKG Acoustics, Inc.

TITLE:
SCHEMATIC
METER RESISTOR CARD, CARD #MR
60040-000-06

All manuals and user guides at all-guides.com

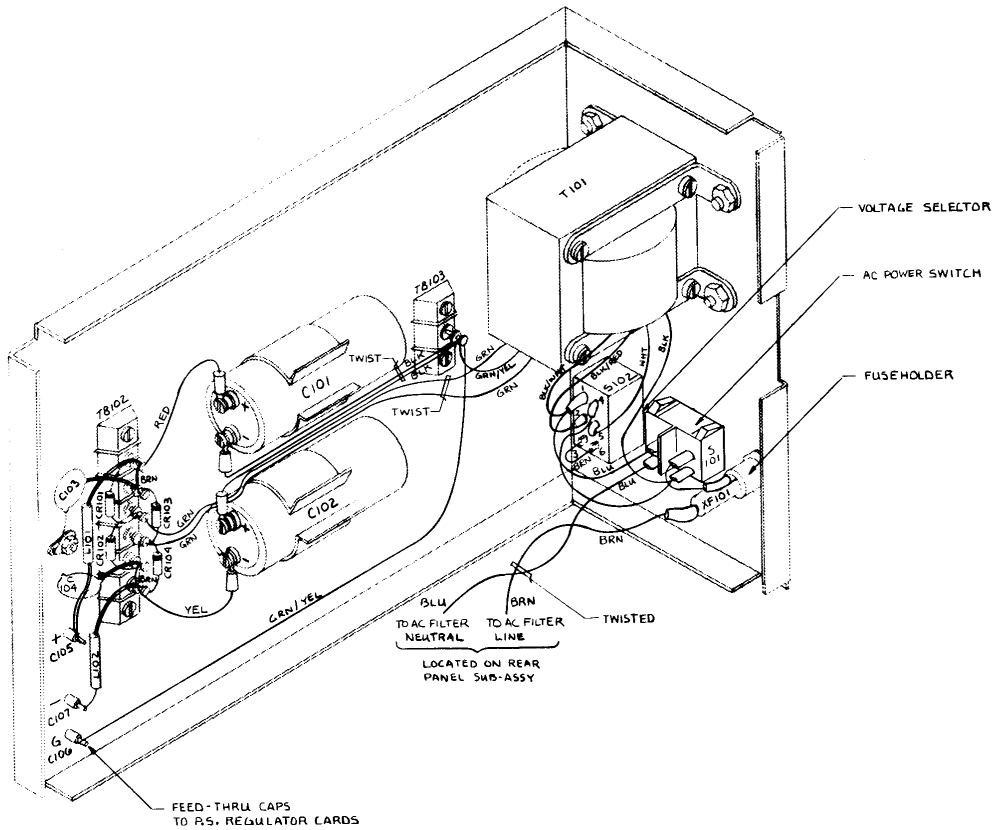

⚠ SLEEVE ALL AC LINE CONNECTIONS.

1. USE 18 AWG, UL 1015, 16/30 STRAND.

NOTES: UNLESS OTHERWISE SPECIFIED

orban a division of AKG Acoustics, Inc.

TITLE:
WIRING DIAGRAM
DC POWER SUPPLY
60106-000-07

All manuals and user guides at all-guides.com

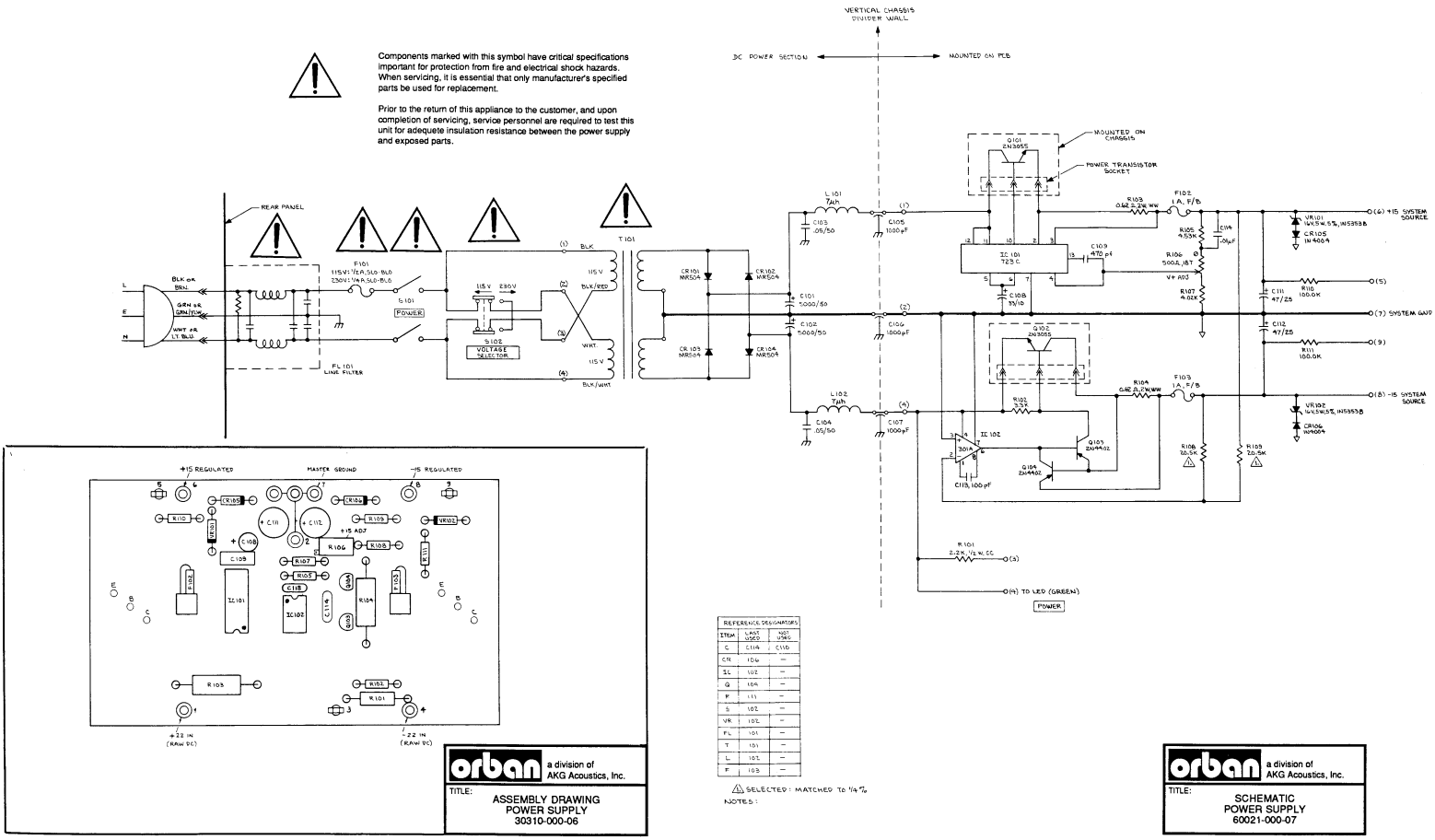

All manuals and user guides at all-guides.com

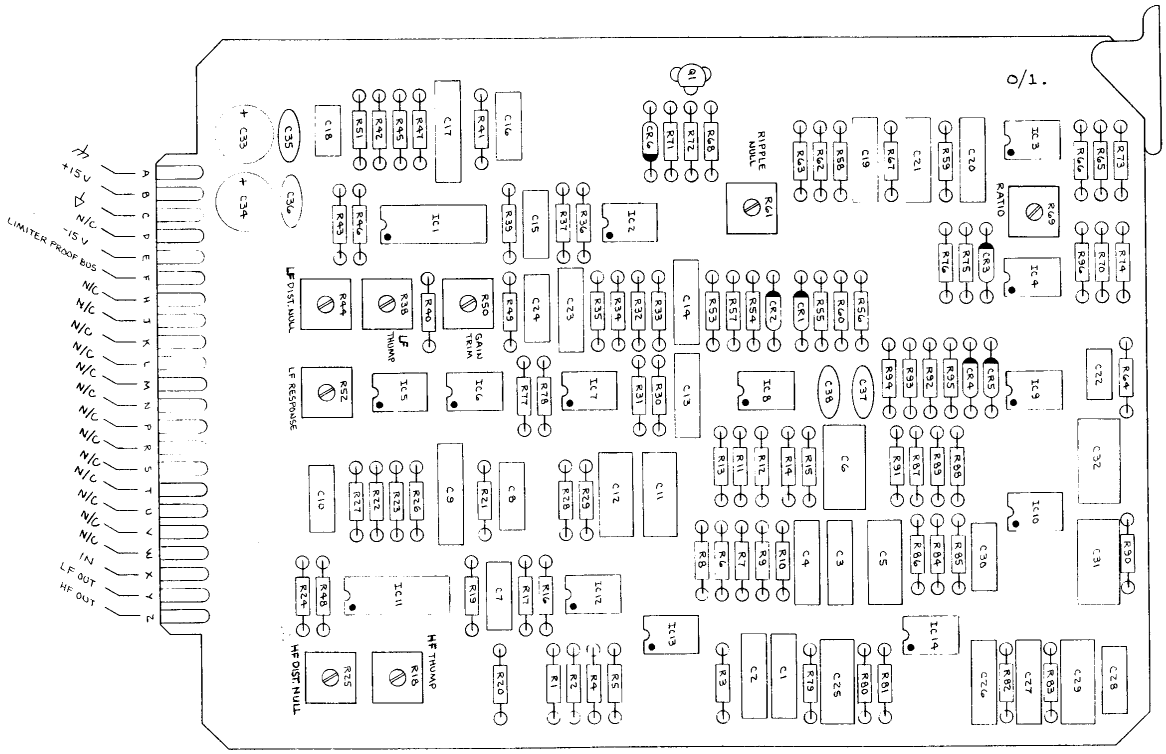

NOTES:

1. VERSION CODE: -001 = "0 CARD, -002 = "1 CARD.
2. USE COMPONENT MOUNTING PADS FOR C33, 34
3. REFERENCE SCHEMATIC PIN 60071-000-XX.

orban a division of AKG Acoustics, Inc.

TITLE: ASSEMBLY DRAWING
HILBERT CLIPPER, CARD #0/1
30730-VER-02

All manuals and user guides at all-guides.com

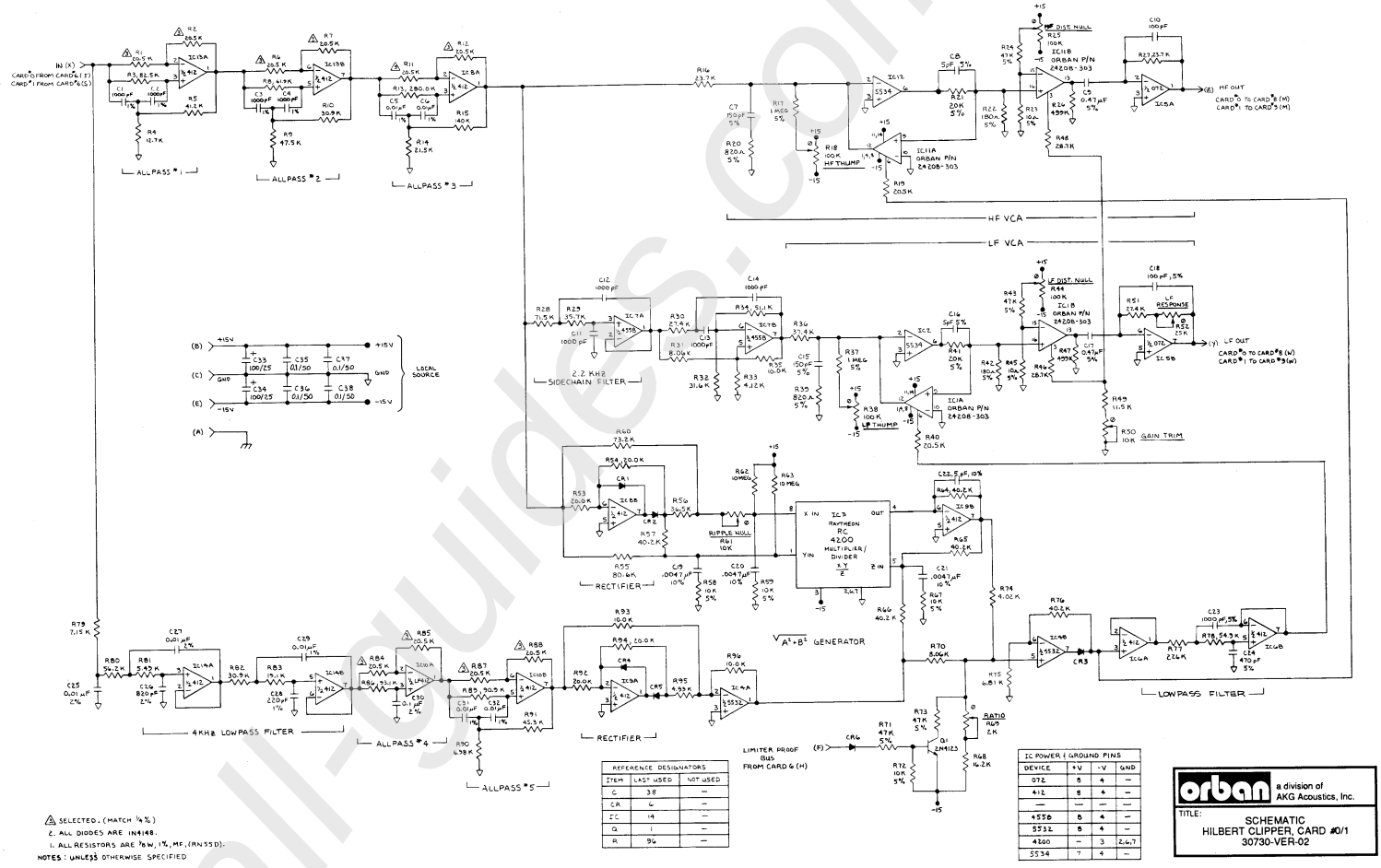

REFERENCE DESIGNATORS		
ITEM	LAST USED	NOT USED
C	38	—
CR	6	—
IC	19	—
Q	1	—
R	94	—

IC POWER / GROUND PINS			
DEVICE	+V	-V	GND
072	8	4	—
412	8	4	—
—	—	—	—
4558	8	4	—
5532	8	4	—
4200	—	3	2,4,7
5534	7	4	—

SELECTED. (MATCH ¼%)
2. ALL DIODES ARE IN4148.
1. ALL RESISTORS ARE ⅛W, 1%, MF, (RN55D).
NOTES: UNLESS OTHERWISE SPECIFIED

orban a division of AKG Acoustics, Inc.

TITLE:
SCHEMATIC
HILBERT CLIPPER, CARD #0/1
30730-VER-02

all-guides.com

All manuals and user guides at all-guides.com

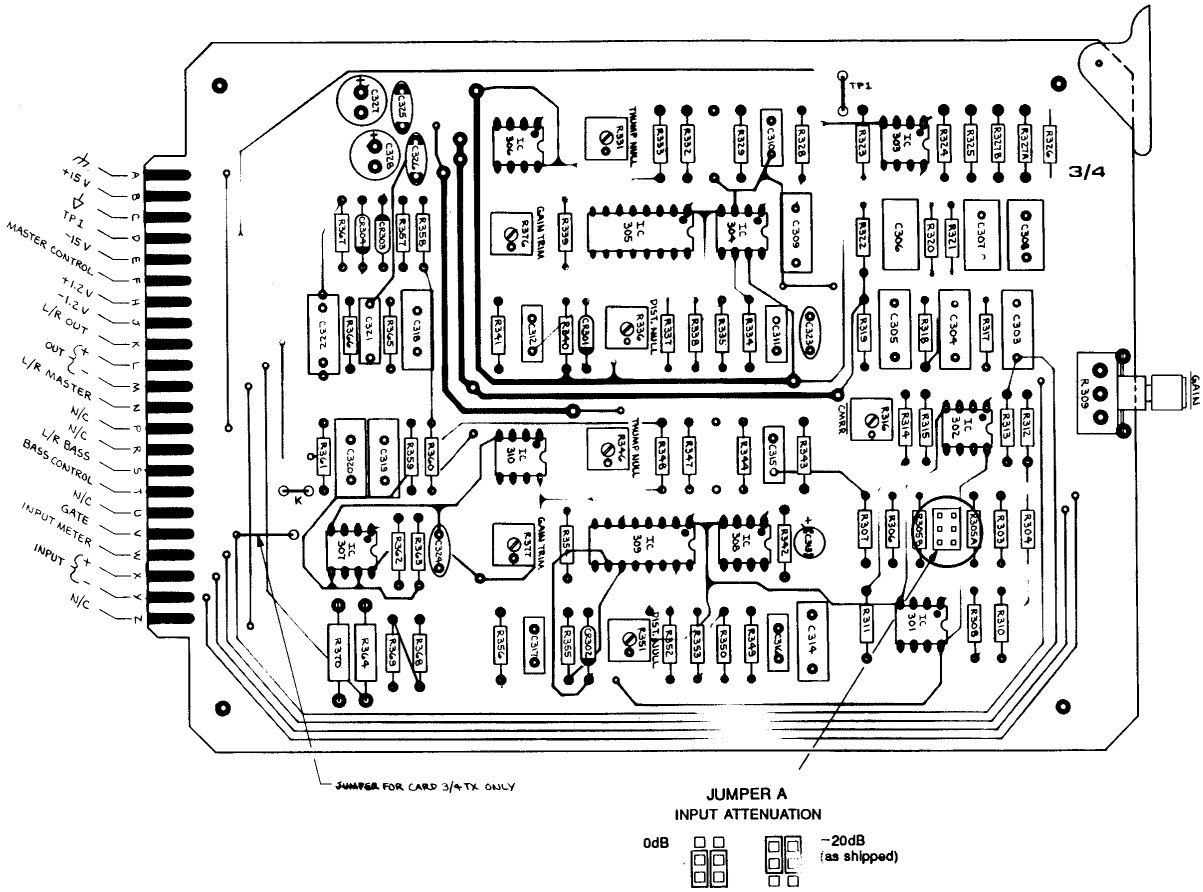

JUMPER A
INPUT ATTENUATION

NOTES:
1. REFERENCE DESIGNATORS SHOWN FOR #3 CARD ONLY (LEFT). #4 CARD (RIGHT) IS 400 SERIES.
2. VERSION CODE: -001 = #3 CARD, -002 = #4 CARD.

orban a division of AKG Acoustics, Inc.

TITLE: ASSEMBLY DRAWING
L&R COMPRESSORS, CARD #3/4
30430-VER-05

All manuals and user guides at all-guides.com

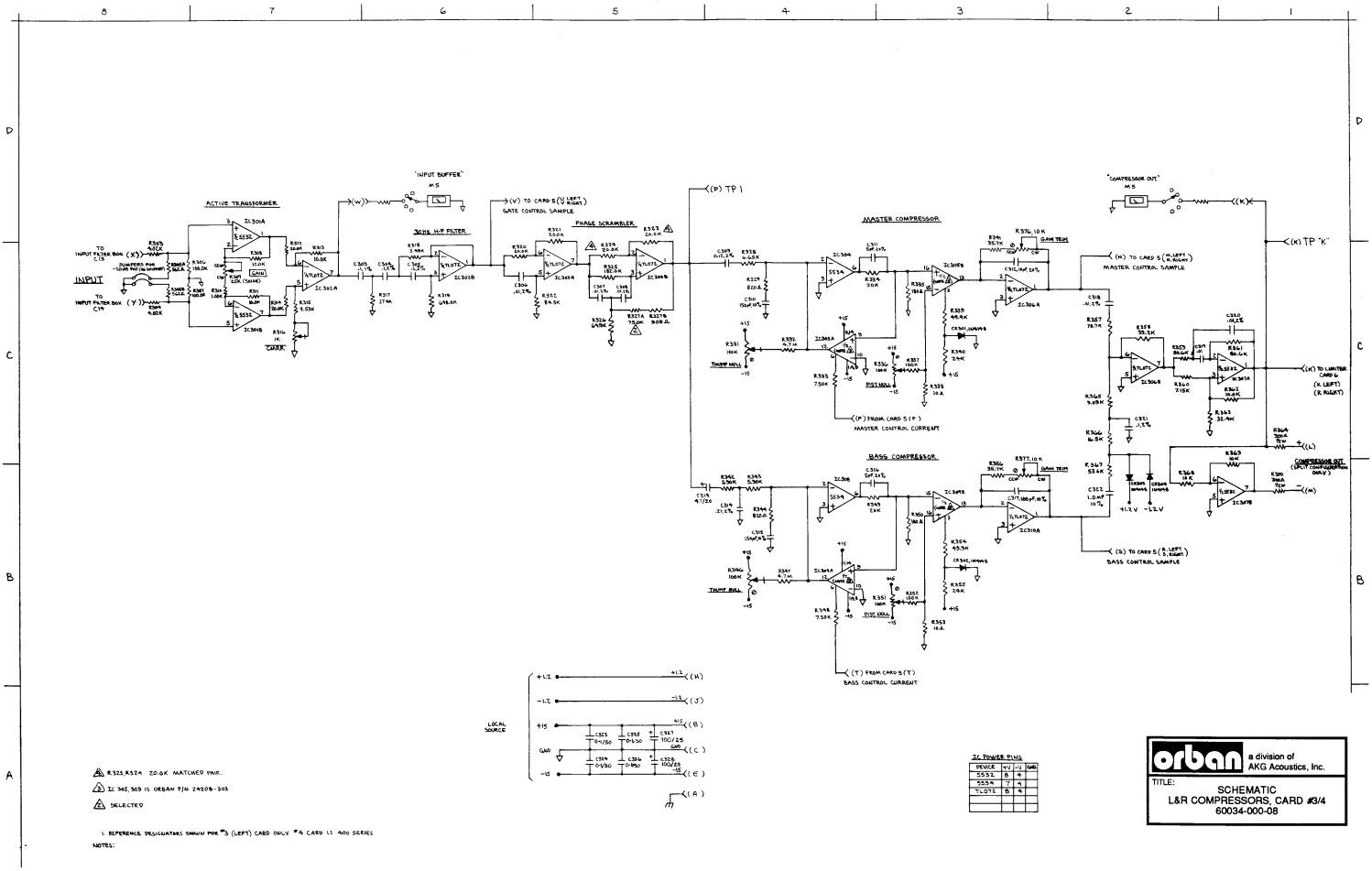

orban a division of AKG Acoustics, Inc.

TITLE:
SCHEMATIC
L&R COMPRESSORS, CARD #3/4
60034-000-08

All manuals and user guides at all-guides.com

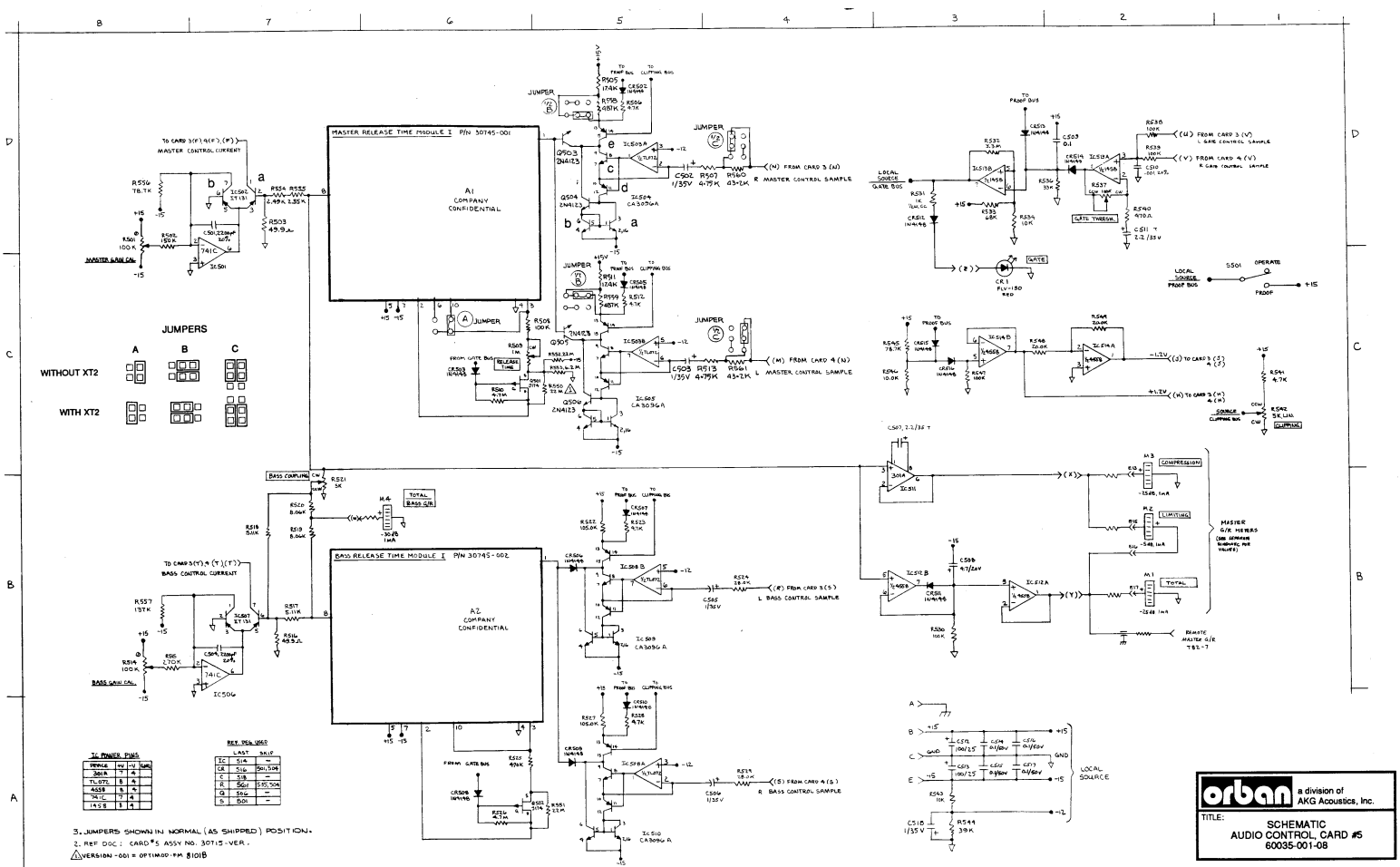

orban a division of AKG Acoustics, Inc.

TITLE: SCHEMATIC AUDIO CONTROL, CARD #5 60035-001-08

All manuals and user guides at all-guides.com

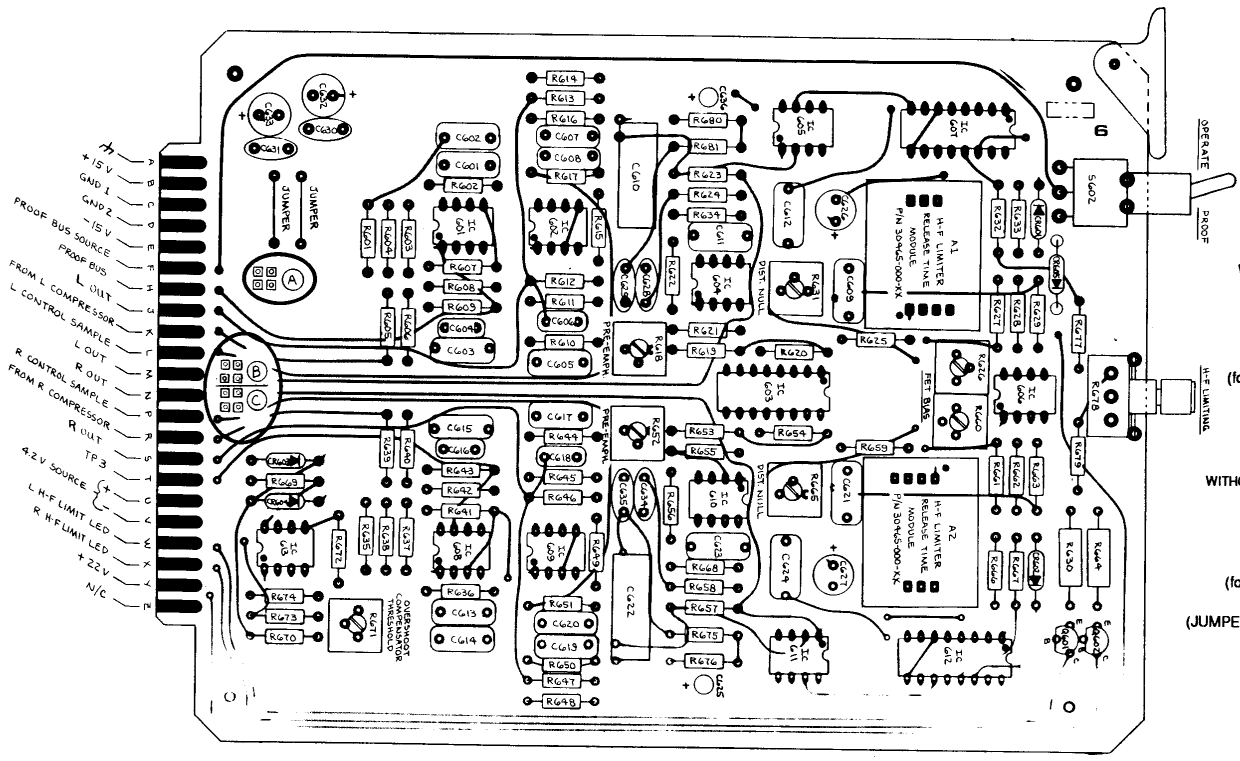

JUMPER A

WITHOUT XT2

WITH XT2

JUMPER B
WITH XT2 OR WITH CARD #0/#1

NORMAL
(as shipped)

REVERSE
(for fault diagnosis)

JUMPER C
WITHOUT XT2 AND WITHOUT CARD #0/#1

NORMAL
(as shipped)

REVERSE
(for fault diagnosis)

(JUMPER C is not used in normal operation)

orban a division of AKG Acoustics, Inc.

TITLE:
ASSEMBLY DRAWING
HF LIMITER, CARD #6
30460-000-08

All manuals and user guides at all-guides.com

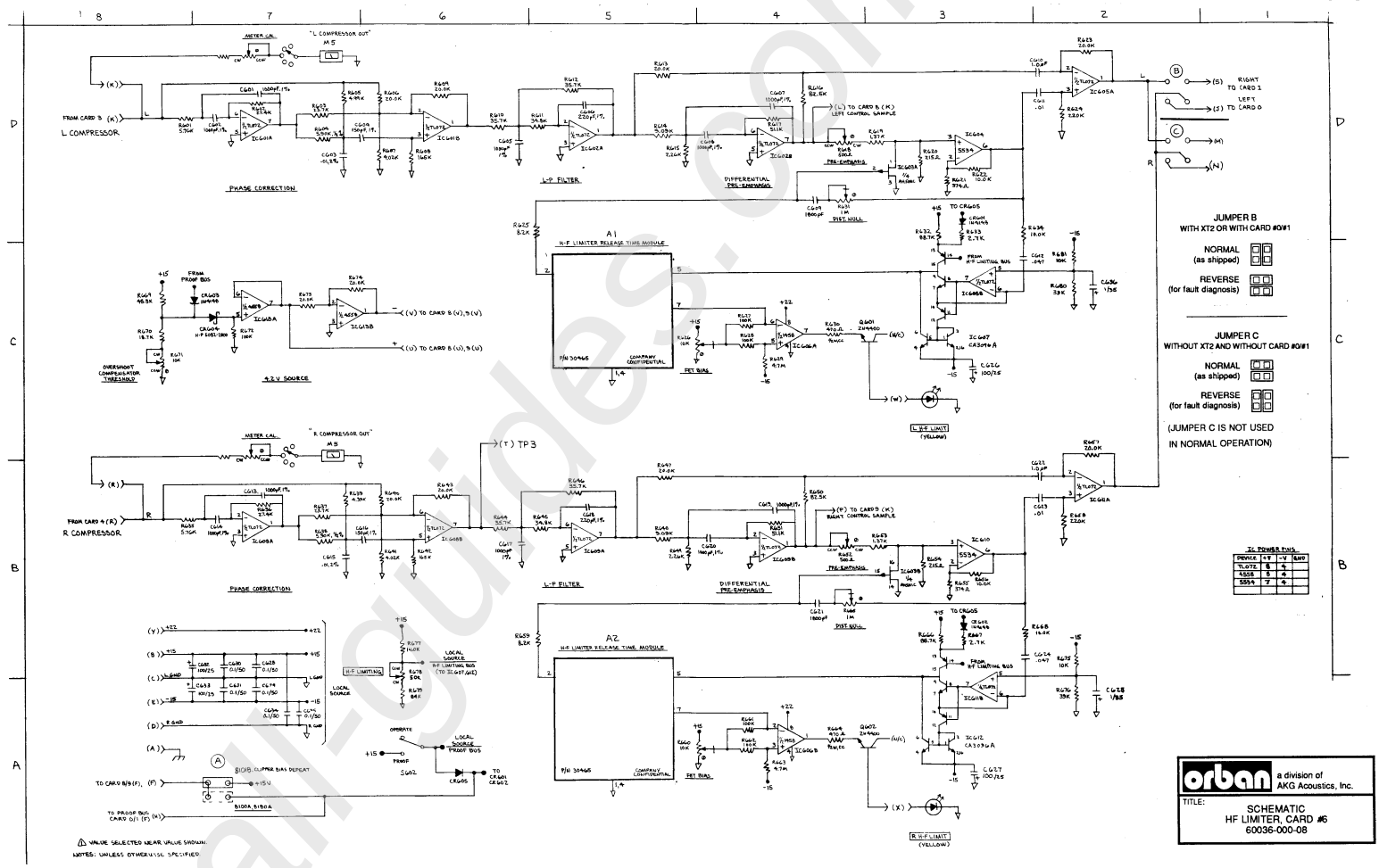

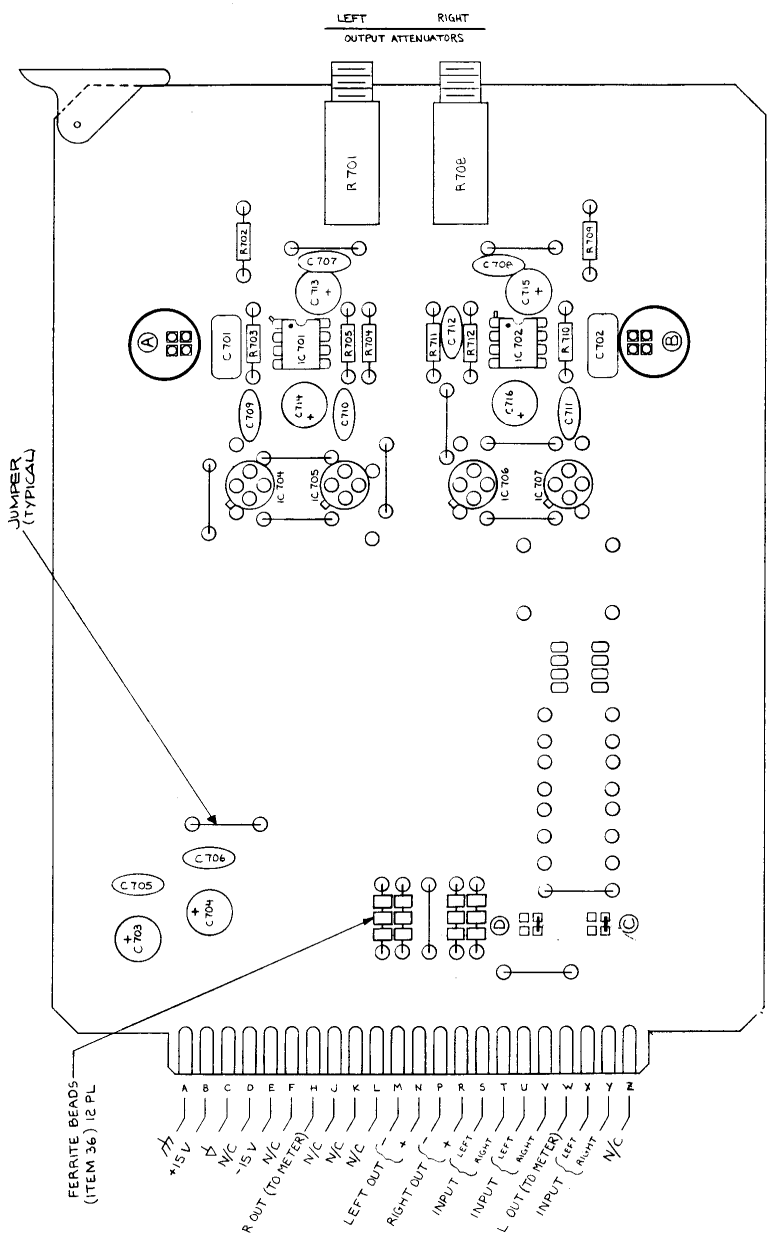

orban a division of AKG Acoustics, Inc.

TITLE: ASSEMBLY DRAWING HIGH POWER OUTPUT, CARD #7 30785-000-02

JUMPER A
LEFT CHANNEL

- FLAT (as shipped)
- PRE-EMPHASIZED OUTPUT

JUMPER B
RIGHT CHANNEL

- FLAT (as shipped)
- PRE-EMPHASIZED OUTPUT

All manuals and user guides at all-guides.com

All manuals and user guides at all-guides.com

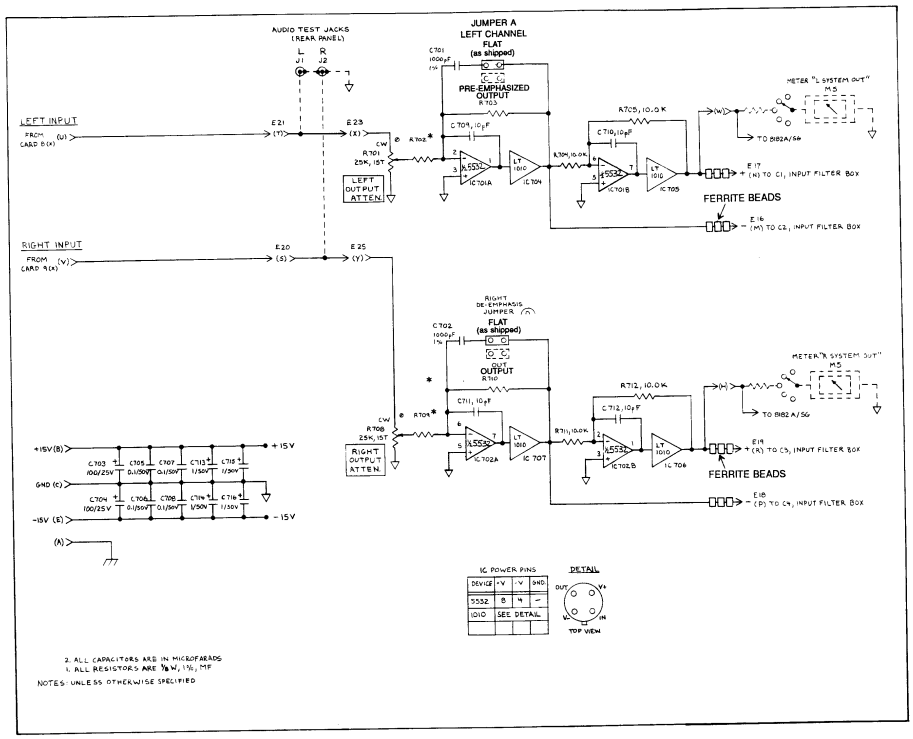

DE-EMPHASIS

	50µs		75µs
	Standard	OPT-022* Installed	
R702	18.2K	76.8K	27.4K
R703	49.9K	49.9K	75.0K
R709	18.2K	76.8K	27.4K
R710	49.9K	49.9K	75.0K

NOTE: If de-emphasis is changed, pre-emphasis on Card 6 must be changed. Consult factory for instructions. See Note on p. 2-8.

*OPT-022 is a level limiting option required for certain countries. See p. 4-11.

orban a division of AKG Acoustics, Inc.

TITLE:
SCHEMATIC
HIGH POWER OUTPUT, CARD #7
61009-000-02

All manuals and user guides at all-guides.com

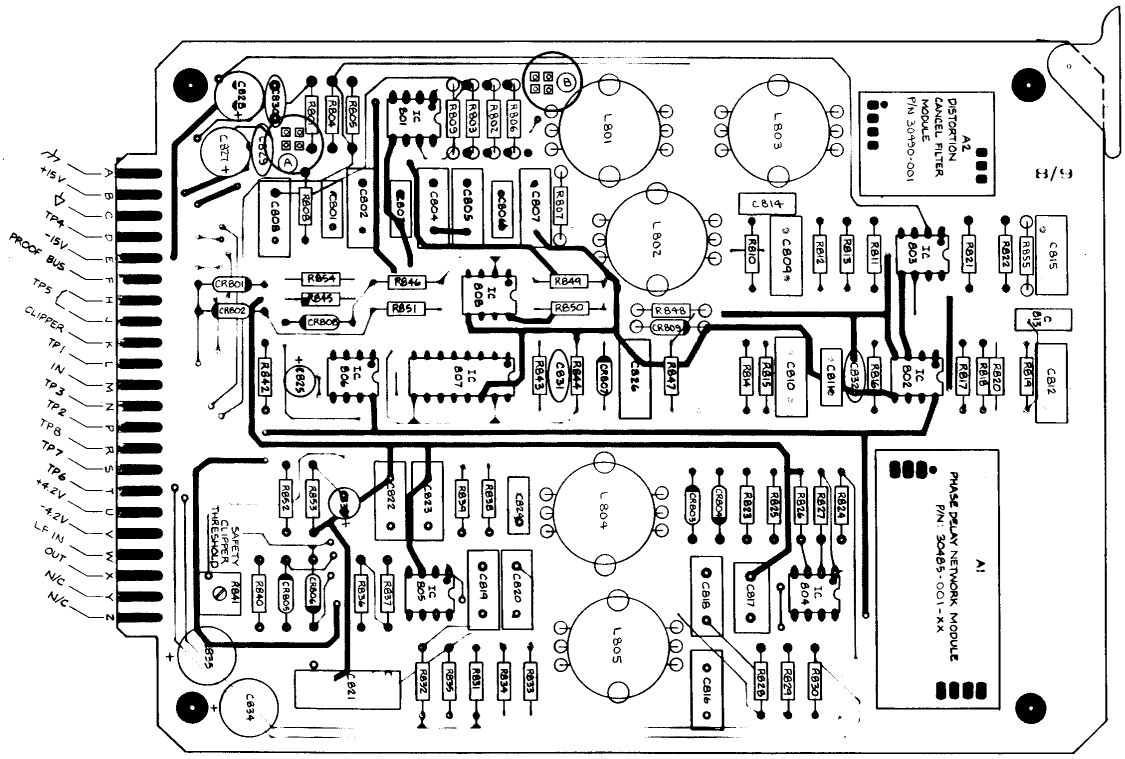

	JUMPER A	JUMPER B
WITHOUT XT2		
WITH XT2		

1. VERSIONS: -001 = CARD 8
-002 = CARD 9

NOTES:

orban a division of AKG Acoustics, Inc.

TITLE:
ASSEMBLY DRAWING
LEFT & RIGHT FILTERS, CARD #8/9
30480-VER-07

All manuals and user guides at all-guides.com

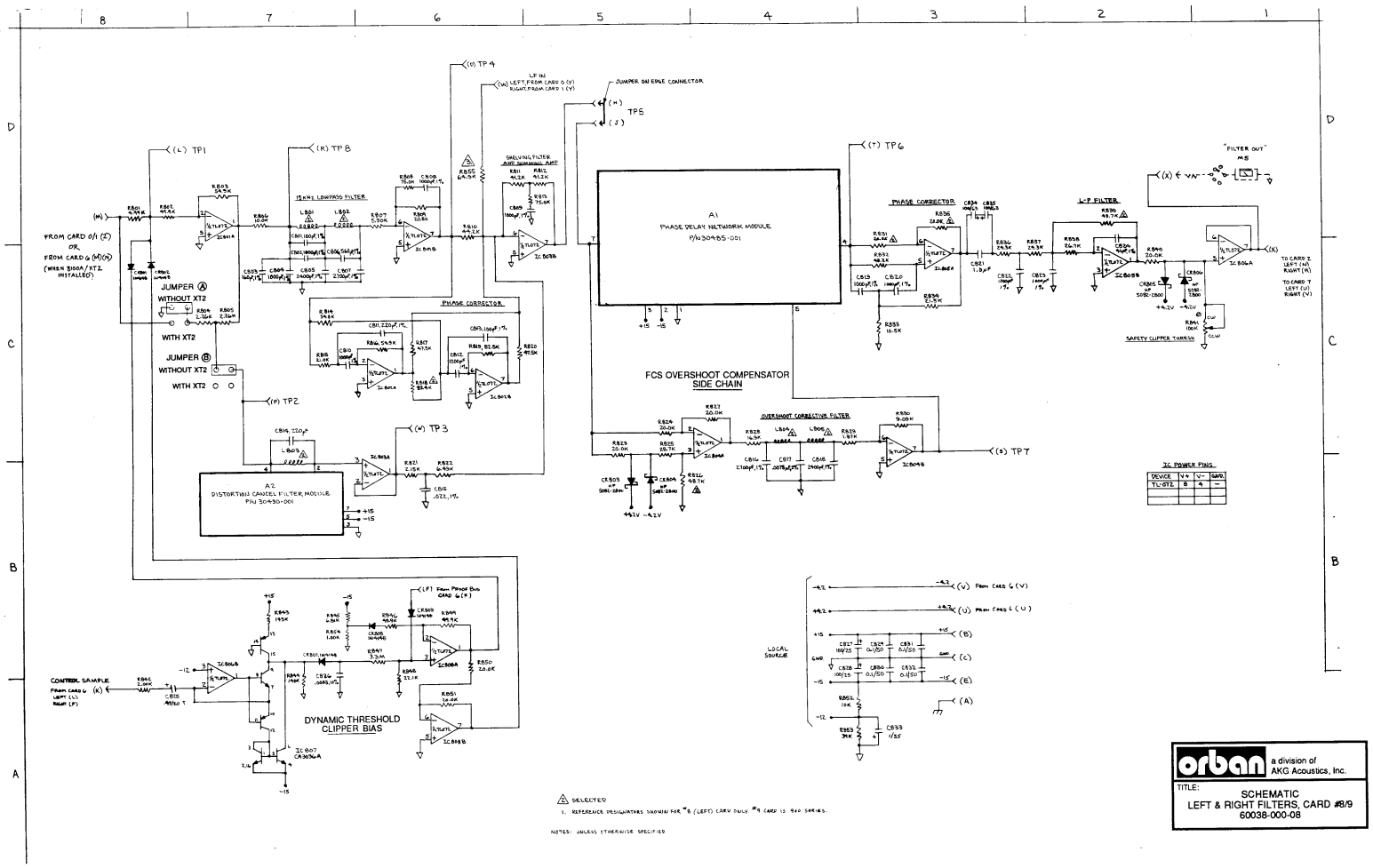

SELECTED

1. REFERENCE DESIGNATORS SHOWN FOR "8 (LEFT) CARD ONLY. "9 CARD IS 900 SERIES.

NOTES: UNLESS OTHERWISE SPECIFIED

orban a division of AKG Acoustics, Inc.

TITLE: SCHEMATIC
LEFT & RIGHT FILTERS, CARD #8/9
60038-000-08

All manuals and user guides at all-guides.com

Abbreviations

Some of the abbreviations used in this manual may not be familiar to all readers:

AGC	automatic gain control
ANSI	American National Standards Institute
CCIF	International Telephone Consultative Committee
CCITT	International Telegraph & Telephone Consultative Committee
CCIR	International Radio Consultative Committee
CD	Compact disc
DAC	digital-to-analog converter
dBu	0dBu = 0.775VRMS. For this application, the dBm into 600Ω scale on voltmeters can be read as if it were calibrated in dBu.
DJ	disk jockey, an announcer who plays records in a club or on the air
EBU	European Broadcasting Union
EMI	electromagnetic interference
FCS	Frequency-Contoured Sidechain (see page 6-23)
FET	field-effect transistor
FFT	fast Fourier transformation
G/R	gain reduction
HF	high-frequency
HP	high-pass
IC	integrated circuit
IEC	International Electrotechnical Commission
IF	intermediate frequency
IM	intermodulation (or "intermodulation distortion")
ips	inches per second
JFET	junction field-effect transistor
LED	light-emitting diode
LF	low-frequency
NAB	National Association of Broadcasters (USA)
N&D	noise and distortion
NRSC	National Radio Systems Committee
NTSC	National Television Standards Committee (N. American television system)
PAL	Phase Alternation Line (European television system)
PCM	pulse-code modulation
PPM	peak program meter
RF	radio frequency
RFI	radio-frequency interference
RIAA	Record Industry Association of America
SECAM	Sequential With Memory (European television system)
SMPTE	Society of Motion Picture and Television Engineers
S/N	signal-to-noise ratio
STL	studio-transmitter link
THD	total harmonic distortion
VCA	voltage-controlled amplifier
VCR	video cassette recorder
XLR	a common style of 3-conductor audio connector

all-guides.com