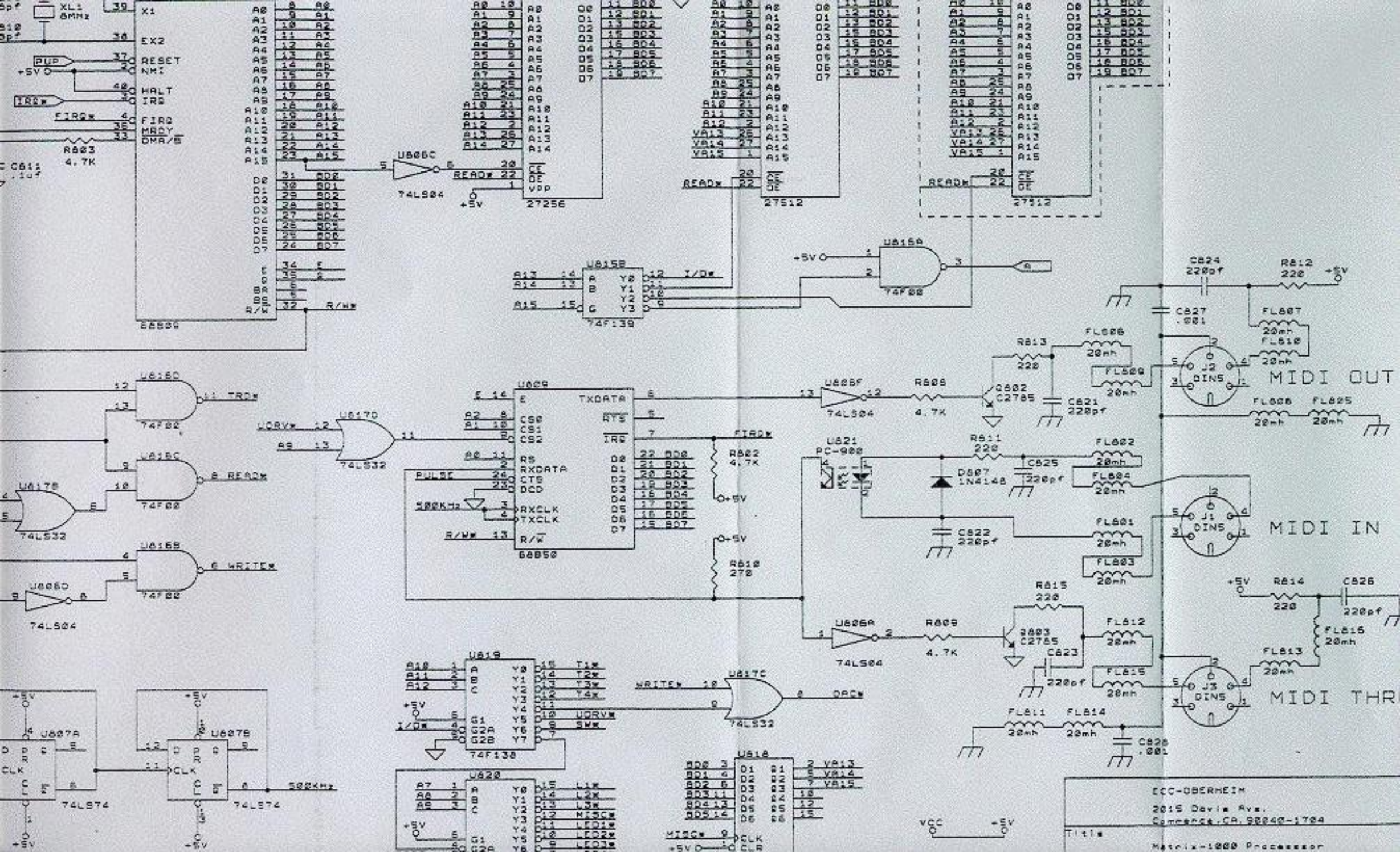
MIDI OUT
MIDI IN
MIDI THR
ECC-OBERHEIM
2015 Davis Ave.
Cerritos,CA. 90640-1704
Title
Matrix-1000 Processor

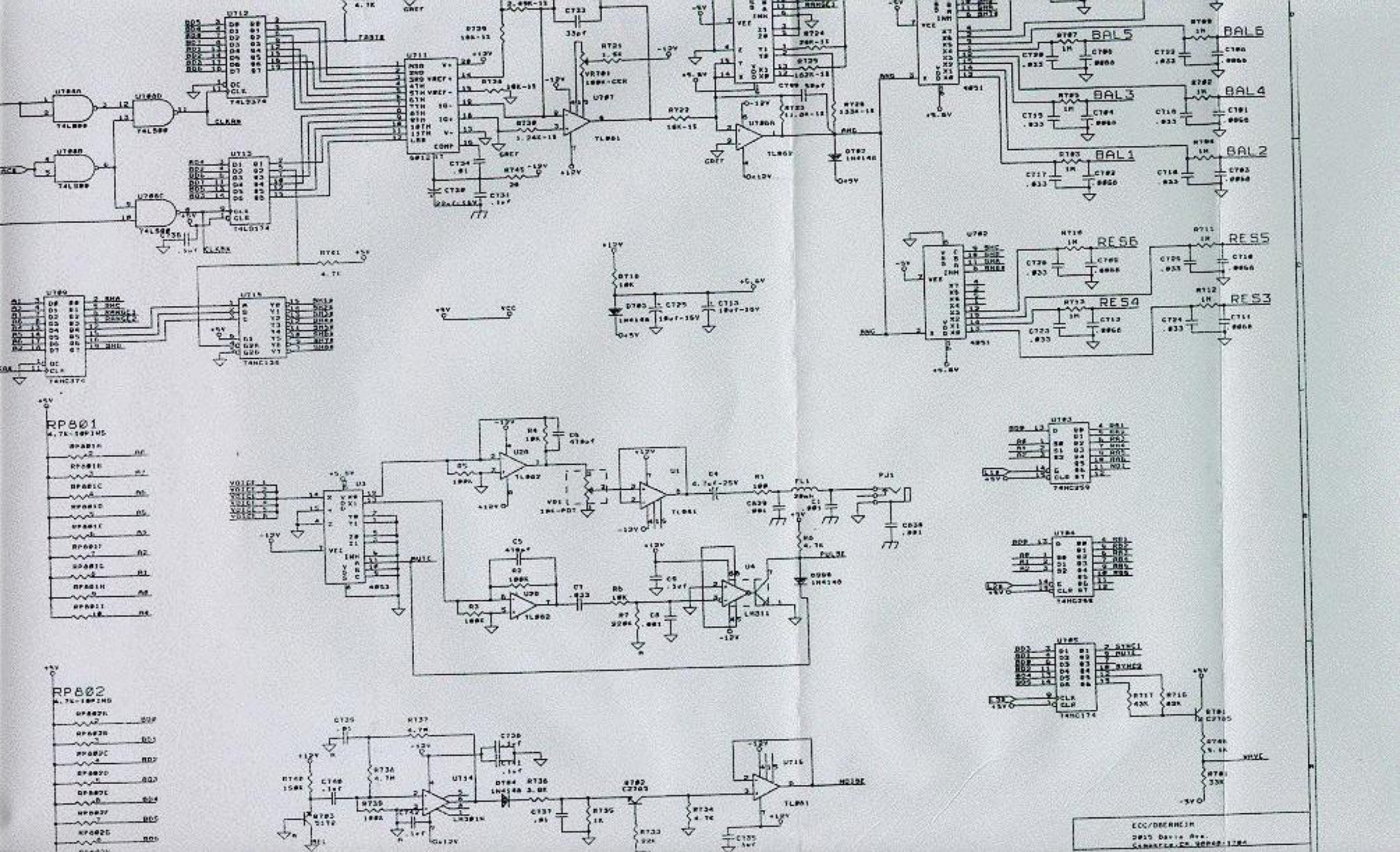
BAL5
BAL6
BAL3
BAL4
BAL1
BAL2
RES6
RES5
RES4
RES3
RP801
RP802
ECC/DBERNEIM

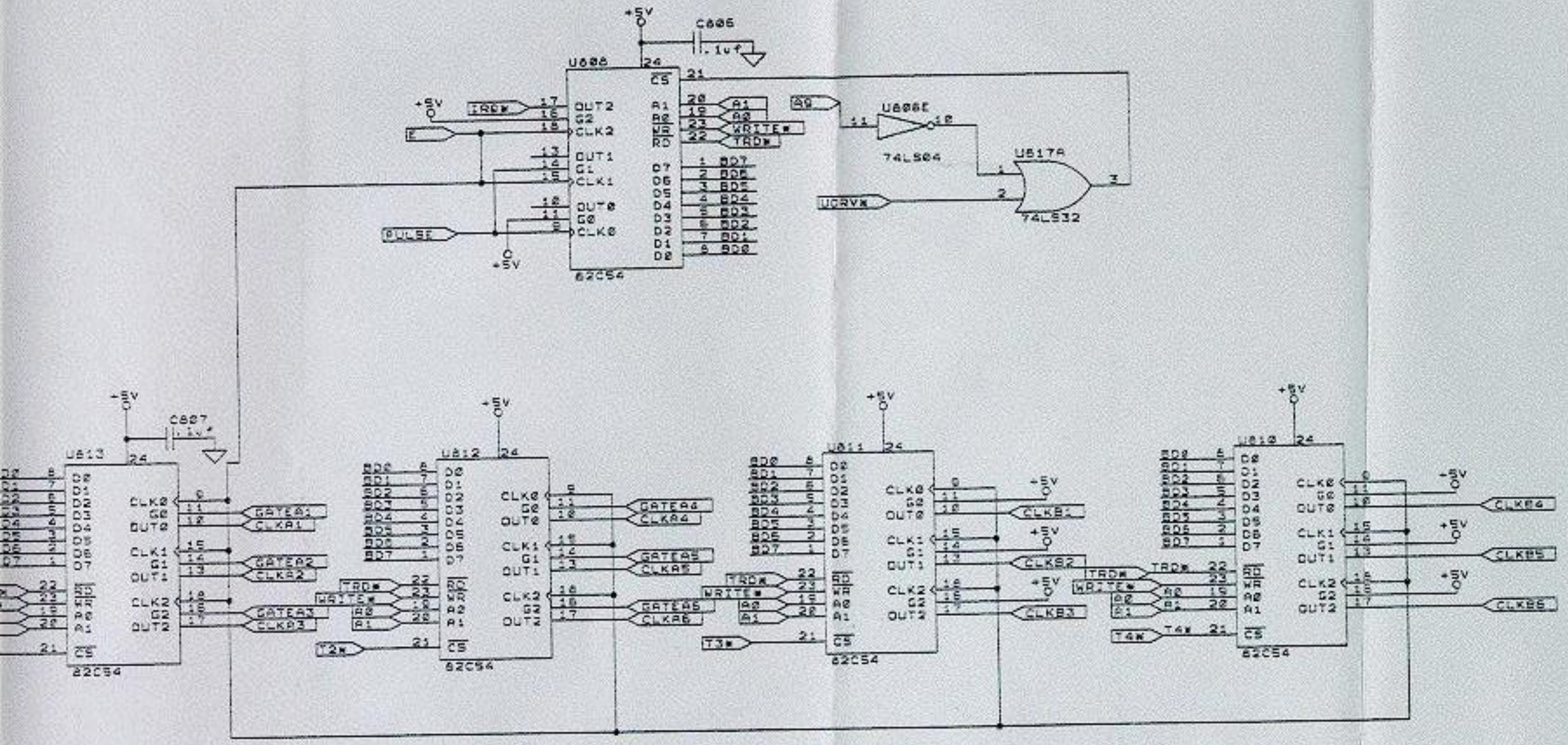

ECC/OBERHEIM
2015 Davis Ave.
Commerce, CA. 90040-1784

Title

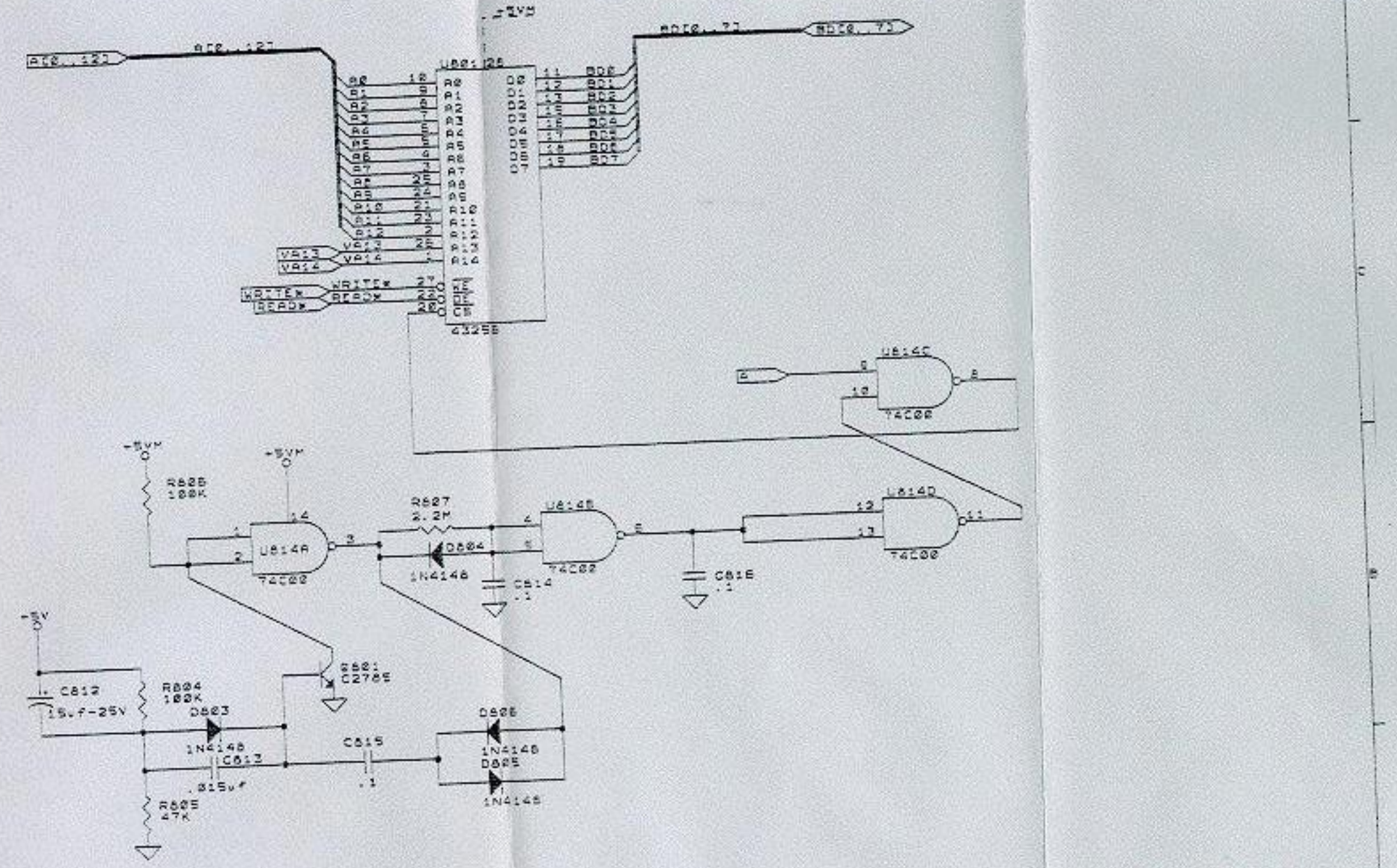

ECC/OBERHEIM 2015 Davie Ave. Commerce,CA.90040-1704		
Title: Matrix-1000 CMOS		
Size: B	Document Number: 2497	REV: B
Date: September 30, 1988	Sheet 5 of 12	

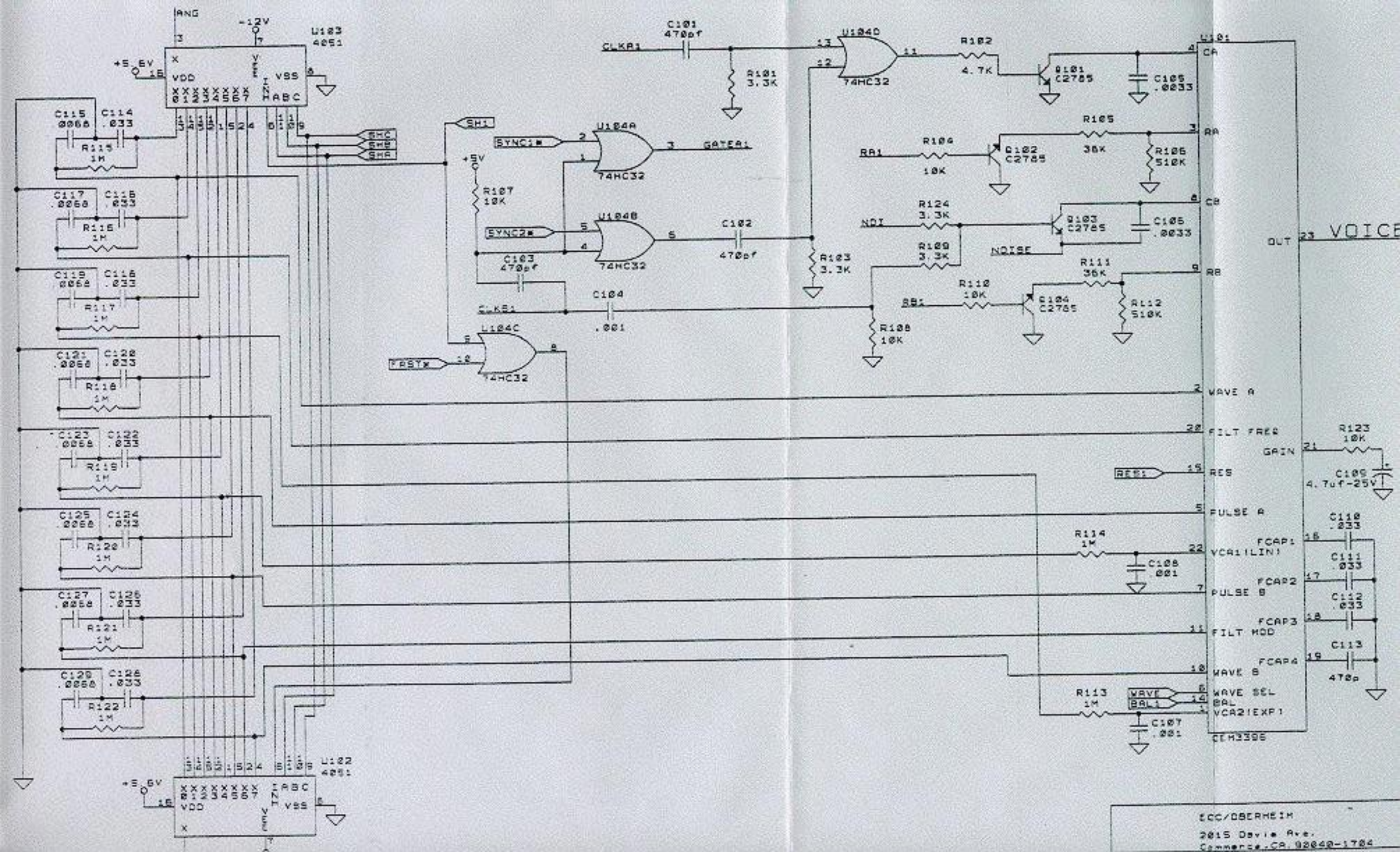

U103
4051
U102
4051
U104A
U104B
U104C
U104D
74HC32
U101
CA
RA
CB
RB
OUT
VOICE
WAVE A
FILT FREQ
GAIN
RES
PULSE A
VCA1(LIN)
PULSE B
FILT MOD
WAVE B
WAVE SEL
BAL
VCA2(EXP)
CEM3396
SYNC1*
SYNC2*
GATEA1
CLKA1
CLKB1
FRST*
RES1
WAVE
BAL1
SHC
SHB
SHA
SH1
NDI
NOISE
ECC/OBERHEIM
2015 Davie Ave.
Commerce, CA 90040-1704

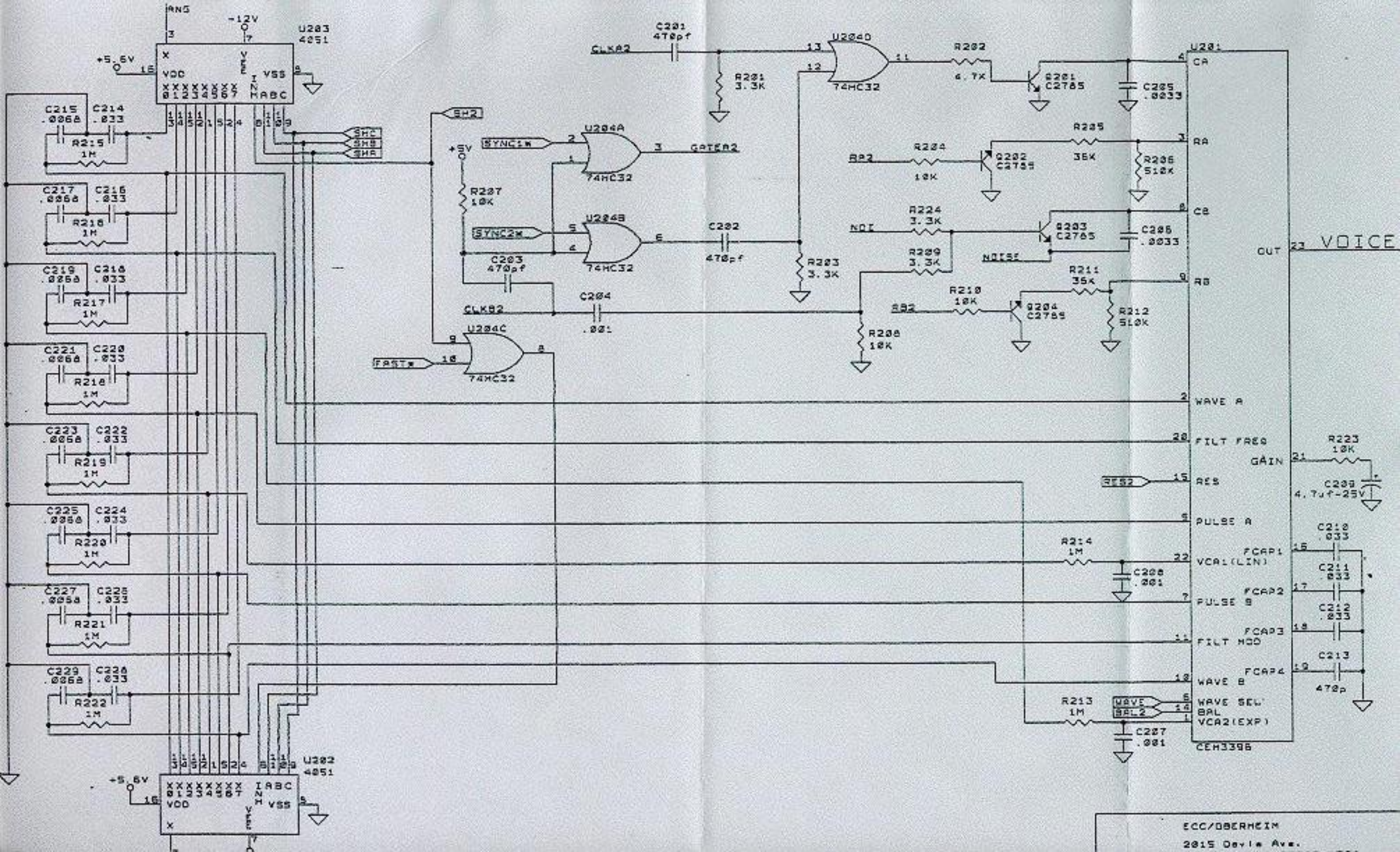

U203
4051
U202
4051
U204A
U204B
U204C
U204D
74HC32
U201
CEH3396
VOICE
ECC/OBERHEIM
2015 Davis Ave.

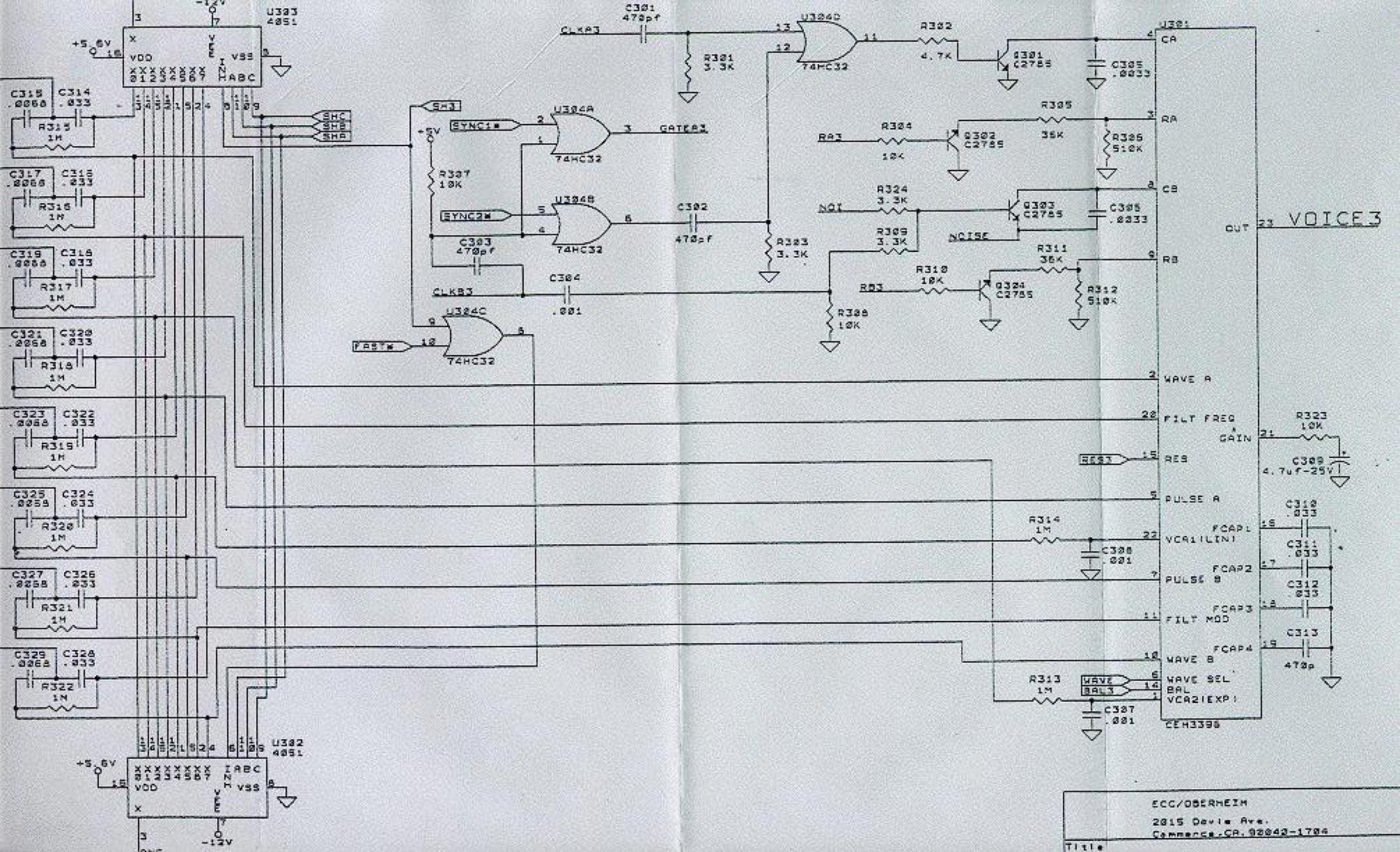
VOICE 3
U303 4051
U302 4051
U304A
U304B
U304C
U304D
74HC32
U301
CEM3396
SH3
SH2
SH1
SYNC1*
SYNC2*
FAST*
GATE3*
CLK3
RA3
RB3
NOI
NOISE
WAVE SEL
BAL
VCA2(EXP)
VCA1(LIN)
PULSE B
FILT MOD
WAVE B
WAVE A
FILT FREQ
GAIN
RES
PULSE A
FCAP1
FCAP2
FCAP3
FCAP4
OUT
CA
RA
CB
RB
+5.6V
-12V
ECC/OBERHEIM
2015 Davie Ave.
Commerce, CA. 90040-1704

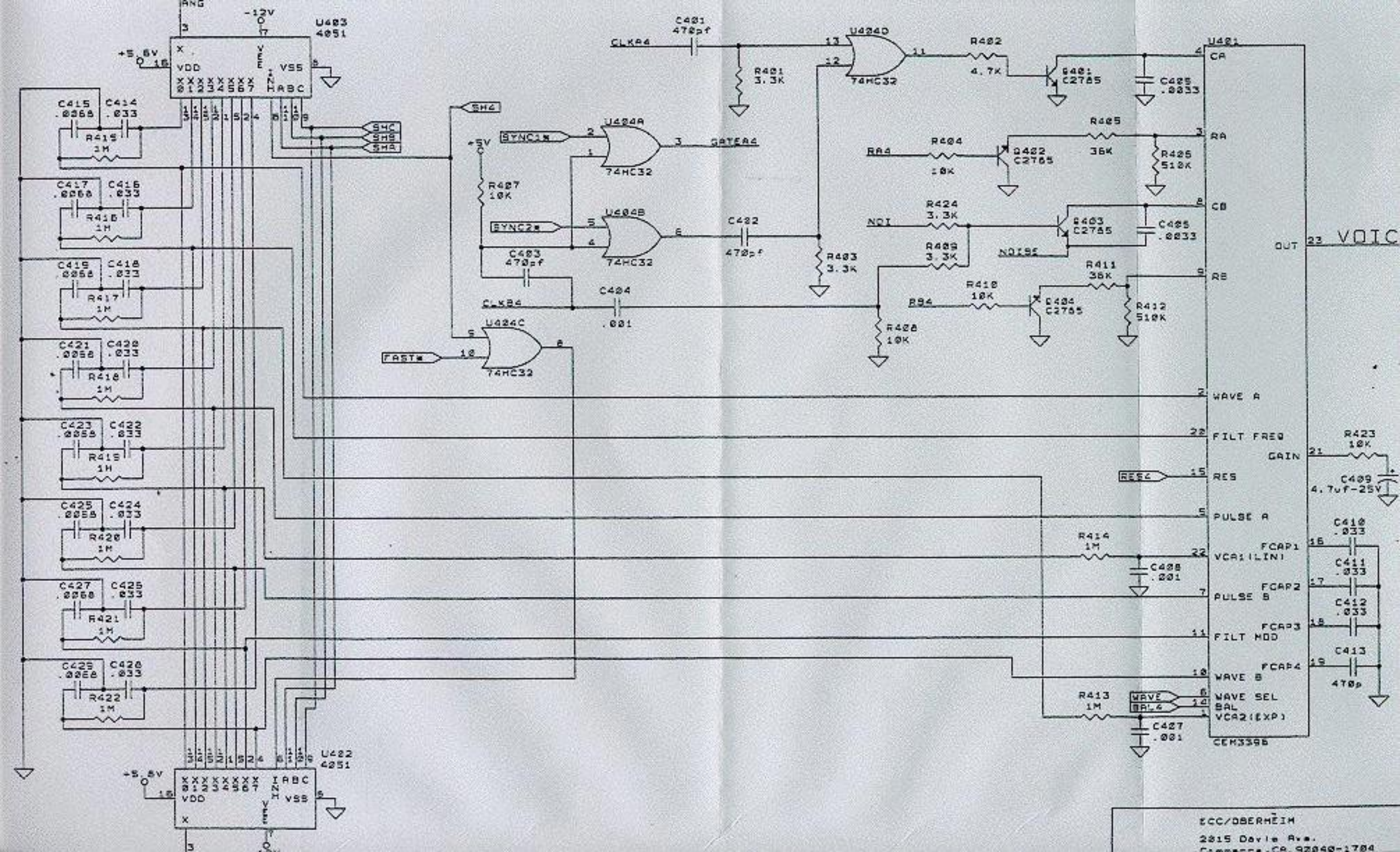

U403
4051
U402
4051
U401
CEM3396
U404A
U404B
U404C
U404D
74HC32
CLKA4
CLKB4
SYNC1*
SYNC2*
GATEA4
FAST*
RES4
WAVE
BAL4
CA
RA
CB
RB
OUT
VOIC
WAVE A
FILT FREQ
GAIN
RES
PULSE A
VCA1(LIN)
PULSE B
FILT MOD
WAVE B
WAVE SEL
BAL
VCA2(EXP)
FCAP1
FCAP2
FCAP3
FCAP4
ECC/OBERHEIM
2015 Davis Ave.

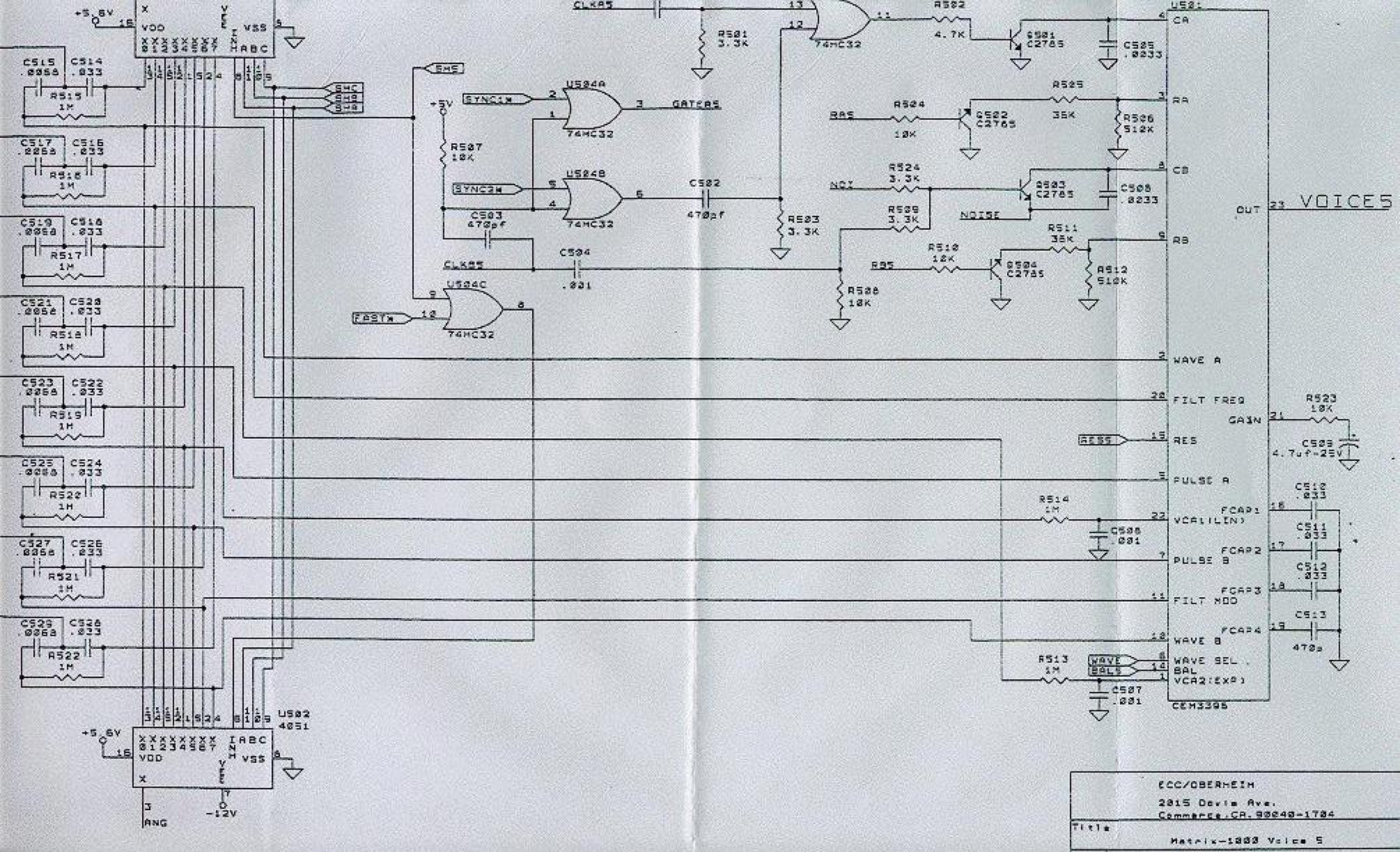

VOICE5
U501
CEM3395
U502
4051
U504A
U504B
U504C
74HC32
CA
RA
CB
RB
OUT
WAVE A
FILT FREQ
GAIN
RES
PULSE A
VCA1(LIN)
PULSE B
FILT MOD
WAVE B
WAVE SEL
BAL
VCA2(EXP)
FCAP1
FCAP2
FCAP3
FCAP4
RA5
NOI
NOISE
RB5
RES5
WAVE
BAL5
SYNC1W
SYNC2W
GATEA5
CLKA5
CLKB5
FASTW
SH5
SHC
SHA
SHB
+5.6V
+5V
-12V
ANG
ECC/OBERHEIM
2015 Davis Ave.
Commerce, CA. 90040-1704
Title
Matrix-1000 Voice 5

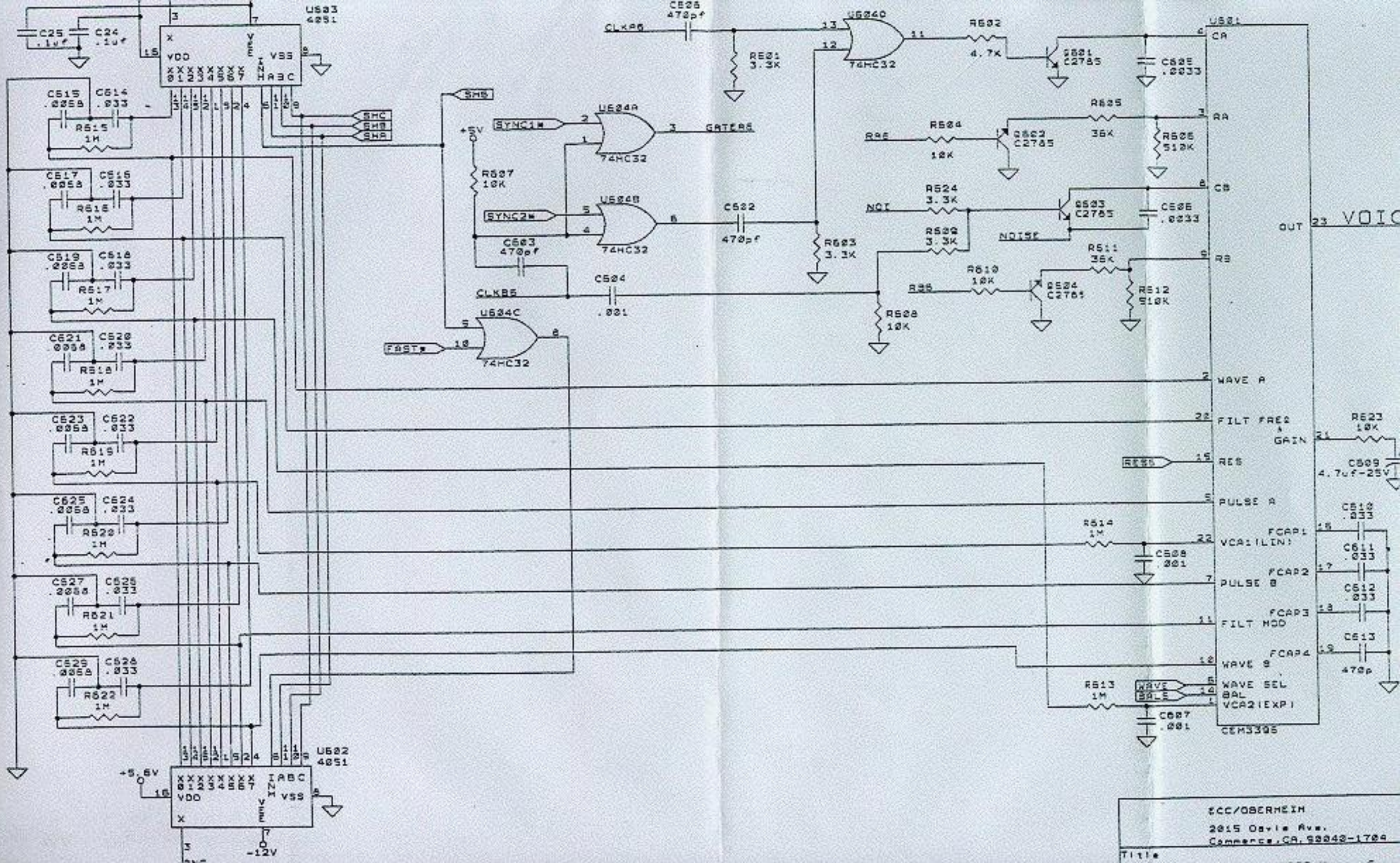
U603
4051
U602
4051
U604A
U604B
U604C
U604D
74HC32
U601
CEM3396
CA
RA
CB
RB
OUT
VOIC
WAVE A
FILT FREQ
GAIN
RES
PULSE A
VCA1(LIN)
PULSE B
FILT MOD
WAVE B
WAVE SEL
BAL
VCA2(EXP)
FCAP1
FCAP2
FCAP3
FCAP4
SHC
SHB
SHA
SYNC1*
SYNC2*
GATEA6
CLKA6
CLKB6
FAST*
NOI
NOISE
RES6
WAVE
BALS
+5V
+5.6V
-12V
ECC/OBERHEIM
2015 Davis Ave.
Commerce, CA 90040-1704
Title

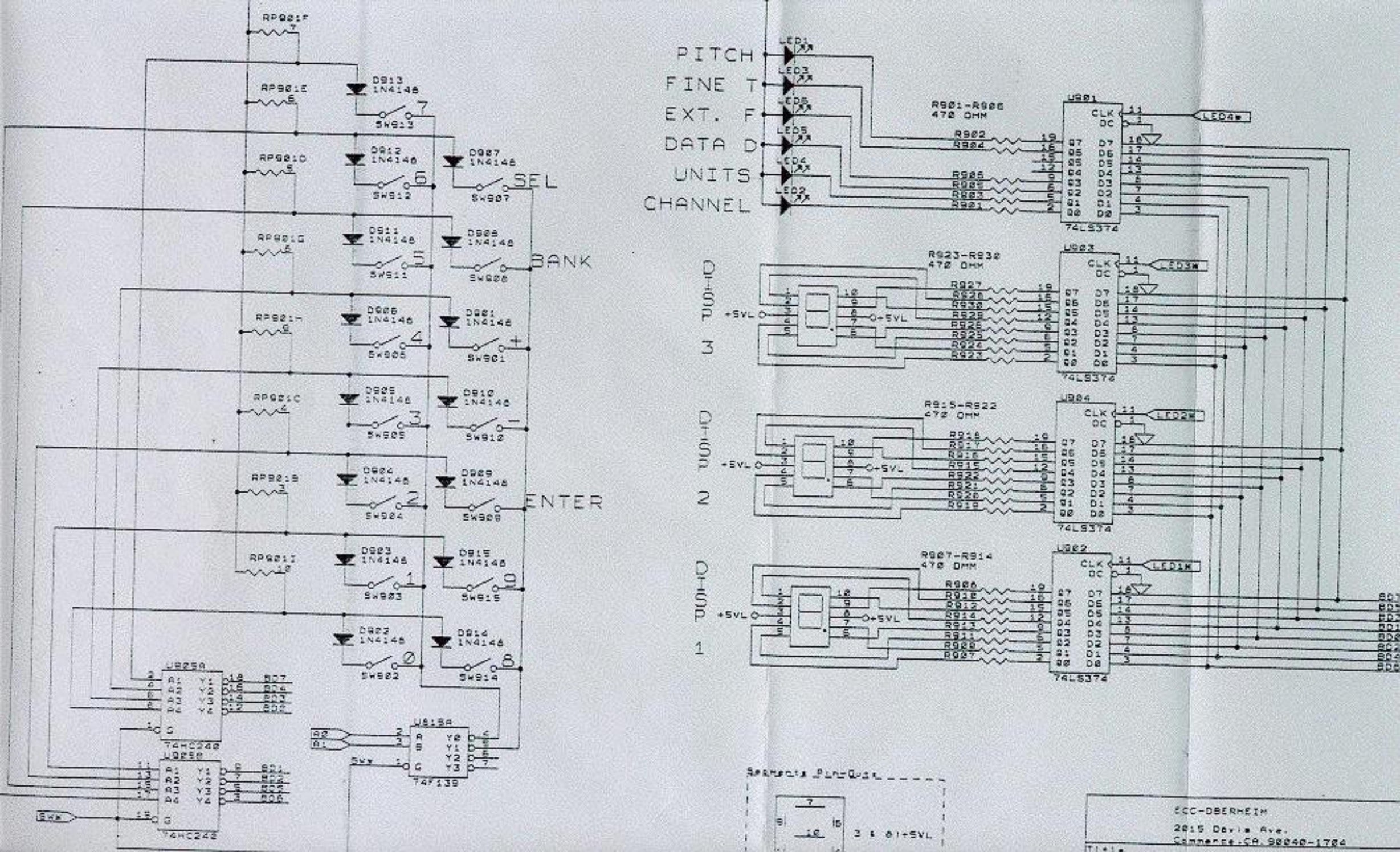
PITCH
FINE T
EXT. F
DATA D
UNITS
CHANNEL
SEL
BANK
ENTER
R901-R906
470 OHM
R907-R914
470 OHM
R915-R922
470 OHM
R923-R930
470 OHM
74LS374
74HC240
74F139
+5VL
LED4W
LED3W
LED2W
LED1W

MATRIX-1000 FILTER (B)

* USE AFTER SERIAL NUMBER 850000 *

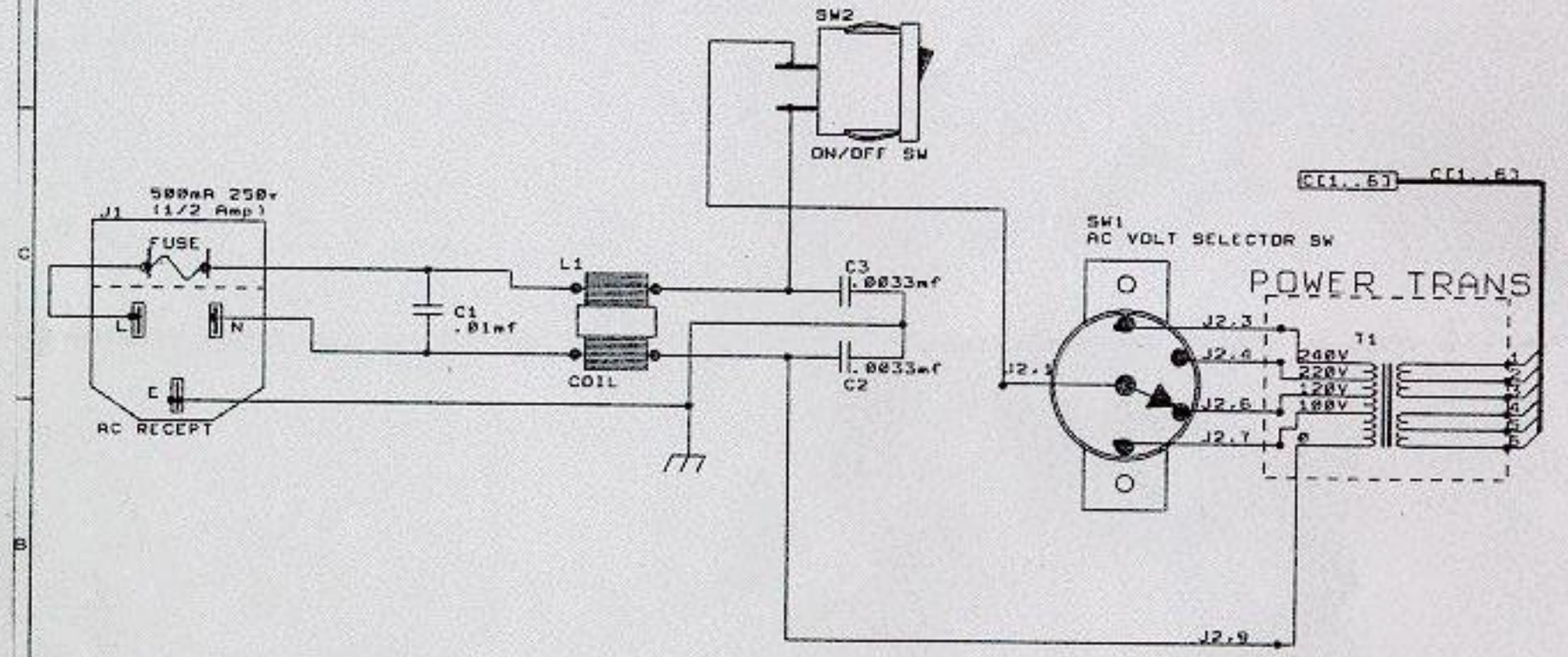

ECC/OBERHEIM 2015 Davie Ave. Commerce, CA. 90040-1704		
Title: MATRIX-1000 FILTER (B)		
Size: A	Document Number: 2446	REV: B
Date: October 20, 1988	Sheet: 1 of 1	

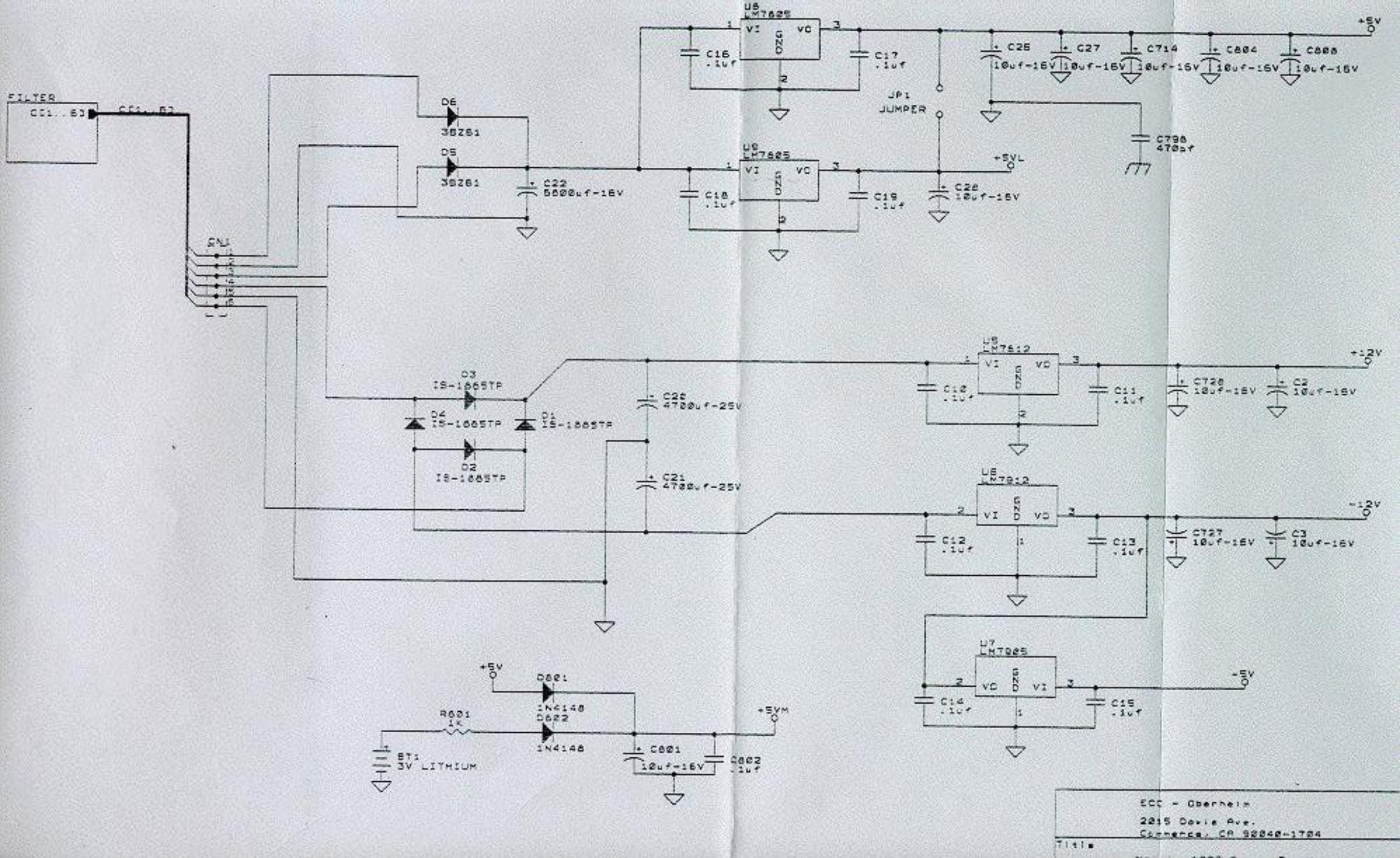
FILTER
CC1..8J
CC1..8J
GND
D6
30Z61
D5
30Z61
C22
5600uf-16V
U8
LM7805
VI
VO
GND
C16
.1uf
C17
.1uf
JP1
JUMPER
C25
10uf-16V
C27
10uf-16V
C714
10uf-16V
C804
10uf-16V
C805
10uf-16V
+5V
C798
470pf
U9
LM7905
C18
.1uf
C19
.1uf
C26
10uf-16V
+5VL
D3
IS-1005TP
D4
IS-1005TP
D1
IS-1005TP
D2
IS-1005TP
C20
4700uf-25V
C21
4700uf-25V
U6
LM7812
C10
.1uf
C11
.1uf
C728
10uf-16V
C2
10uf-16V
+12V
U5
LM7912
C12
.1uf
C13
.1uf
C727
10uf-16V
C3
10uf-16V
-12V
U7
LM7905
C14
.1uf
C15
.1uf
-5V
+5V
D801
1N4148
D802
1N4148
R801
1K
BT1
3V LITHIUM
C801
10uf-16V
C802
.1uf
+5VM
ECC - Oberheim
2015 Davie Ave.
Commerce, CA 90040-1704
Title