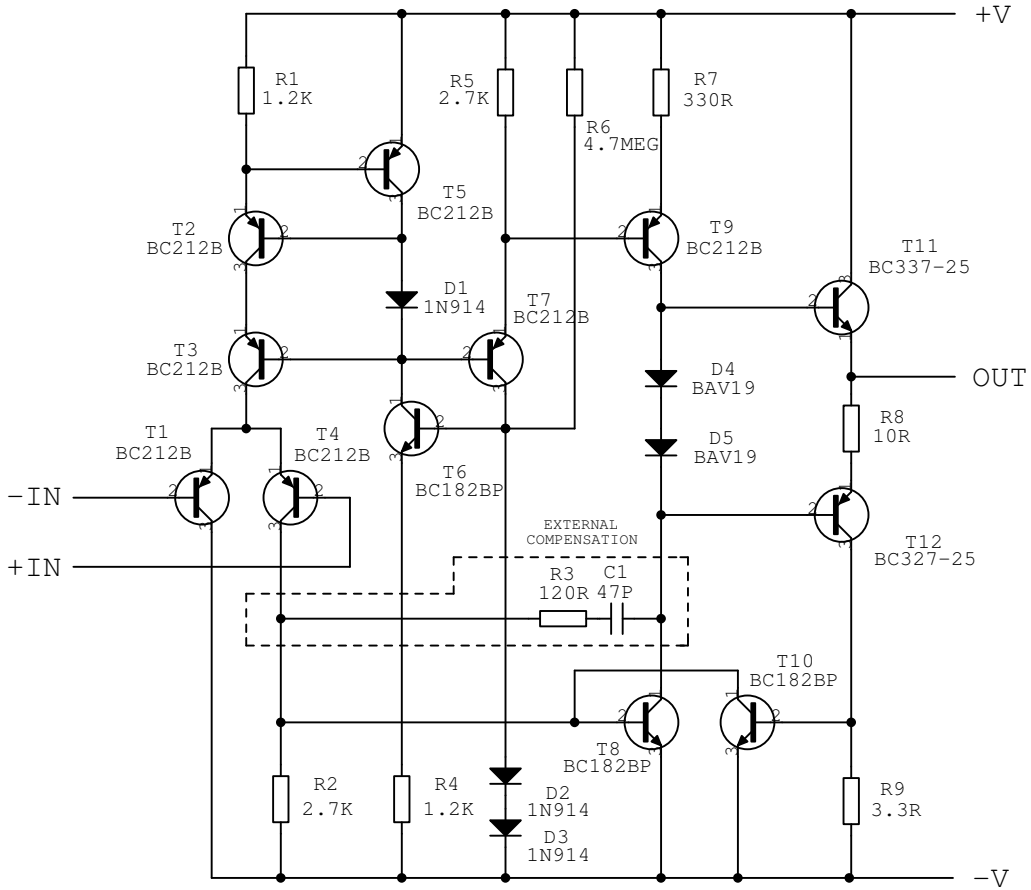

Rev	ID
0	NEUMANN OA10 DISCRETE OP-AMP
Date:	Page: 1 of 1