VALLEY AUDIO PRODUCTS INC.

MODEL 433

COMPRESSOR-EXPANDER-GATE-

DUCKER-LIMITER

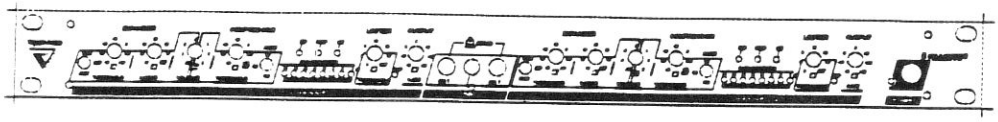

OPERATING INSTRUCTIONS

VALLEY AUDIO

A Division of GALAXY AUDIO

625 East Pawnee Avenue
Wichita, KS 67211
USA 67211

U.S. Toll Free: 800.800.4345
Phone: (316) 263-2852
FAX: (316) 263-0642

© 1994

VALLEY AUDIO PRODUCTS INC.

MODEL 433

COMPRESSOR-EXPANDER-GATE-

DUCKER-LIMITER

Section:	Description:	Page:
1	General Inforrmation	3
2	Controls and Features	12
3	Installation	15
4	Operation	17
5	Warranty	25
6	Illustrations	26

1. GENERAL INFORMATION

1.1 DESCRIPTION

The Valley International DYNAMITE^3 is a self-contained and self-powered, multi-purpose signal processor. It is comprised of two, independent channels which are each capable of interactive expansion, compression and peak limiting. The DYNAMITE^3's ability to provide three dynamics functions at once allows the user to completely define the resultant audio signal level. The independent channels may be coupled in order to process stereo program material.

Each of the two compressor sections contain continuously variable Thresholds and switch selectable Ratios. Valley's unique Automatic Gain Recovery scheme computes the amount of output gain required to maintain a constant nominal output level regardless of the unit's Threshold and Ratio settings. The compressor sections use Valley's averaging Linear Integration Detector to insure dynamic integrity and sonic naturalness.

Each of the two Expander sections features three selectable modes: Gate, Expand and Duck. These modes are operated on by the continuously variable Expander Threshold and Range controls. Gate mode consists of a 1:20 slope and peak detector; Expand mode utilizes a 1:2 slope and an averaging Linear Integration Detector and Duck mode uses a 1:-20 slope and averaging detector. By applying a controlling signal to the Key input of the DYNAMITE^3, the Duck mode provides the useful "voice-over" or "ducking" effect commonly used by announcers.

Coupling of the release circuitry in the adjacent compressor and expander sections results in seamless transitions between the two processing sections. Though the nominal Release time for all sections is set by the front panel control, Valley's proprietary Anticipatory Release Computer alters the control voltage release time in response to program content. This feature greatly lessens the effect of low frequency "pumping" and modulation distortion.

The limiter sections utilize peak detectors for absolute level determination. A continuously variable Threshold control ranging from 0 to +24 dBv and a fixed infinite:1 Ratio are also employed on each channel.

Each channel of the device is fully metered with individual Expand, Compress and Limit indicators, an 8-segment Gain Reduction meter and a clip indicator.

Additionally, internal jumpers allow each channel to be set up individually for either auotomatic gain makeup, which compensates for changes in compressor Threshold settings, or traditional manual gain makeup, similar to most basic compressors. Auto gain makeup is ideal for live or studio recording, whereas manual gain makeup is effective for sound reinforcement, where the operator needs to hear that compression is occurring.

Chassis ground and circuit/signal ground can be separated by disconnecting a soldered jumper located on the circuit board, behind the fuse holder. Removing the jumper can assist in some ground loop situations, where hum or buzz are problematic.

The inputs of each channel are balanced and capable of handling +24 dB maximum inputs levels. The ground-sensing, balanced outputs can deliver +24 dBm into 600 Ohm loads as well as feed -10dBv lines with excellent noise and distortion performance.

1.2 MODEL 433 DYNAMITE^3 SPECIFICATIONS

Controls:

2x Gate, Expander Duck Selector switch	
2x Expander Threshold	40 to + 20 dB
2x Expander Range	-60 to 0, Out
2x Expander/Compressor Release	.05 to 5 Secs
2x Compressor Threshold	-40 to +20 dB
2x Compressor Ratio switch	3:1, 6:1, 20:1
2x Limiter Threshold	0 to +20 dB, Out
2x Output Gain	-15 to +15 dB
Internal Switching: 2x Jumper pins	Auto or Manual Gain Makeup

Inputs

Maximum Input Before Overload	+24 dBv Balanced
	+21 dBv Unbalanced
Input Impedance	100 kOhms Balanced
	80 kOhms Unbalanced

VCA

Compression Attack (Linear Integration Detection)	Program Dependent 1-10 mSec
Expander Slope	1:2
Expander Attack	Program Dependent 1-10 mSec
Gate Slope	1:20
Gate Attack	50 µSec

Outputs

Maximum Output Before Overload	+24 dBv Balanced
	+21 dBv Unbalanced
Output Impedance	50 Ohms Balanced
	25 Ohms Unbalanced
Output Noise (20 Hz-20Khz)	< -86 dBv
IMD (SMPTE @ unity gain)	< .02%

Electrical:

Power Supply Mains Requirements	90-135 Vac
	190-250 Vac
	50/60 Hz
	14 VA maximum

Packaging

Dimensions	1 3/4" H x 19 " W x 8 7/8" D
	44 mm x 482 mm x 225 mm D
Weight	7.10 lbs.
Shipping Weight	10 lbs.

Notes:
The designations dB and dBv refer to 0dB =0.775 Vrms. dBm refers to 1 mW power into 600 ohms.
Noise measurements made with the Audio Precision System 1 Dual Domain system.

1.3 INTRODUCTION TO DYNAMICS PROCESSING

Dynamics processing is defined as manipulation of the dynamics of an audio signal. The most familiar of these processes are COMPRESSION, LIMITING, and EXPANSION.

COMPRESSION is a method of reducing the dynamic range of a signal by increasing the gain of the processing signal chain in the presence of signal levels below a given THRESHOLD, or "switching point," and decreasing the gain in the presence of signals above the threshold. The degree to which the gain is altered above the threshold setting is expressed as the RATIO of a signal level change at the input to the resulting signal level change at the output. In a compressor, for example, a 3 dB increase in signal level above the threshold may result in a 1 db increase in output level, thus the COMPRESSION RATIO may be stated as being 3:1. Typical compressor transfer curves are shown in Figure 1.

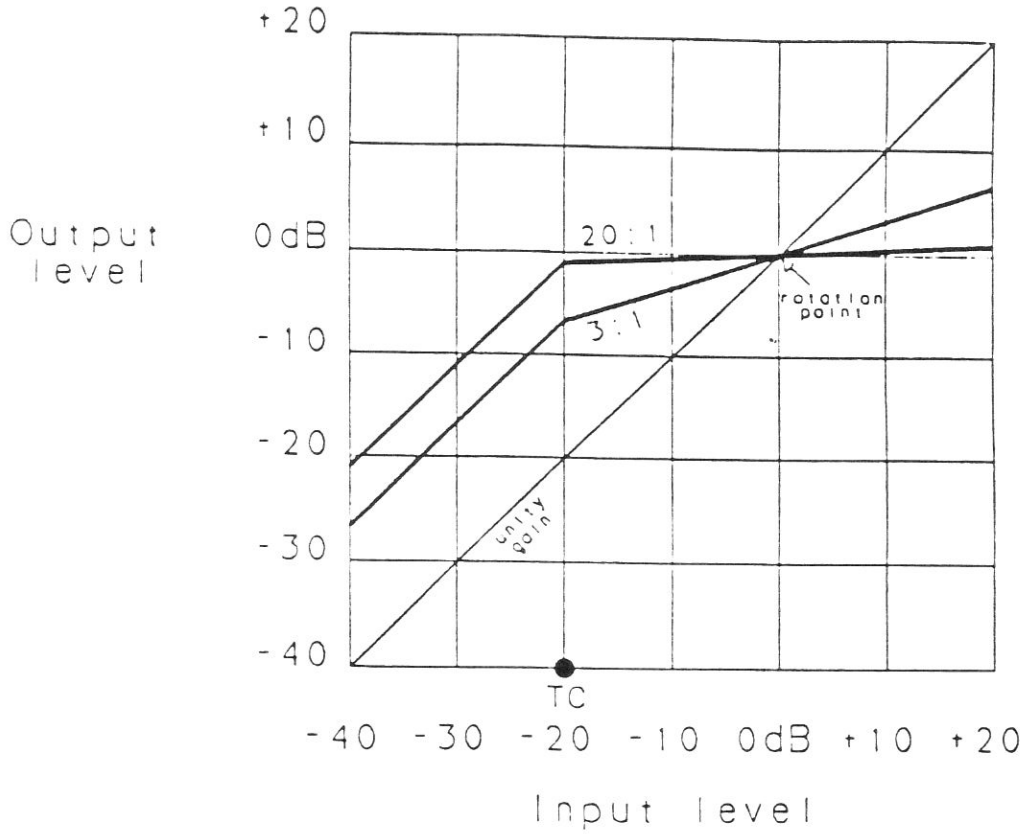

FIGURE 1

Input vs. Output Voltage Levels of a Continuous Tone Signal Through a Compressor with Threshold @ -20 dB

Note that the compressor adds gain to signals below the threshold. At the threshold, TC, the compressor begins to add less gain up to the rotation point, which is the unity gain point for the processor signal chain. As the input level exceeds the rotation point, the compressor begins to attenuate the signal.

LIMITING is a method of confining the maximum signal output level of the processor to a preset value. Although compression at high ratios is considered to constitute limiting, a limiter, in its pure form, does not add gain to signals below its threshold. A perfect limiter has a ratio of infinity to 1 (Inf:1), indicating that an infinite increase in signal level is required to produce an output level increase of 1 dB. In practice, limiters exhibit limiting ratios of 8:1 to 60:1. A typical limiter transfer curve is shown in Figure 2.

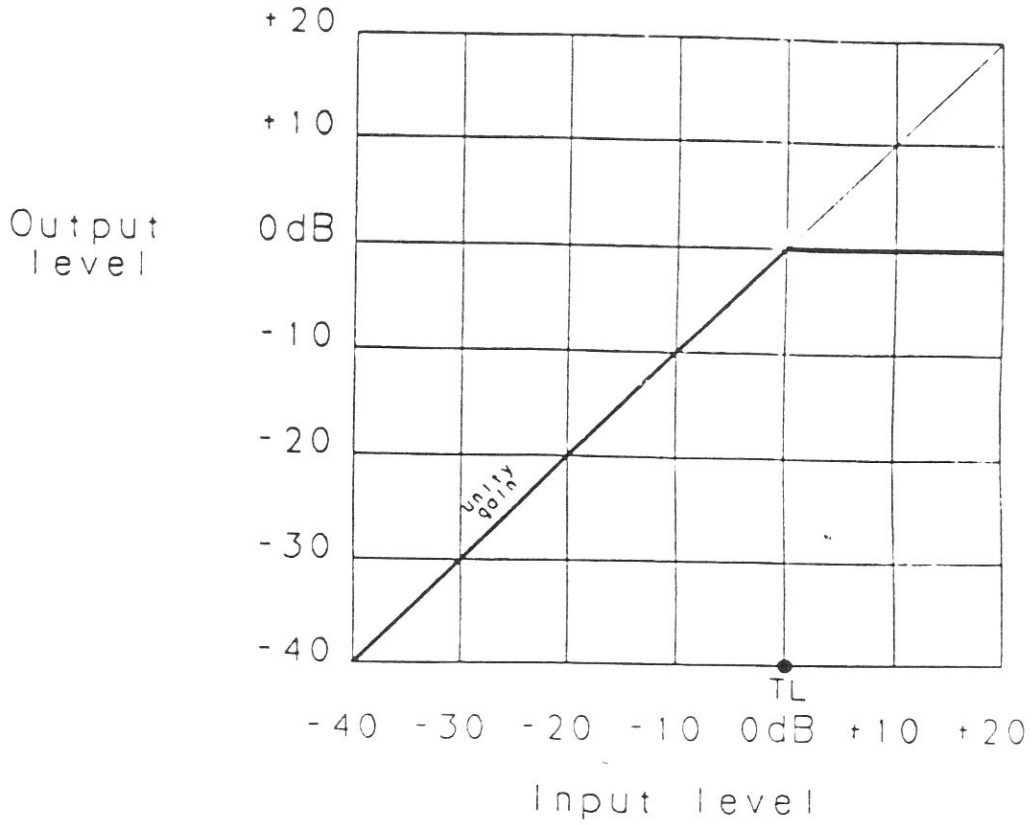

FIGURE 2

Input vs. Output Voltage Levels of a Continuous Tone Signal Through a Limiter with Threshold @ 0 dB

Note that the processor signal chain exhibits unity gain until the input signal level reaches the limiting threshold, TL. As the input signal exceeds the threshold, TL, the processor attenuates the signal in such a manner that the output level is not allowed to exceed the threshold setting.

EXPANSION is a method of increasing the dynamic range of a signal by automatically increasing the processor signal chain gain in response to an increase in input level. Since headroom limitations do not allow unlimited increases in gain, the reciprocal action is used in an expander, i.e., the signal chain gain is reduced in response to a reduction in input level. A typical expander transfer curve is shown in Figure 3.

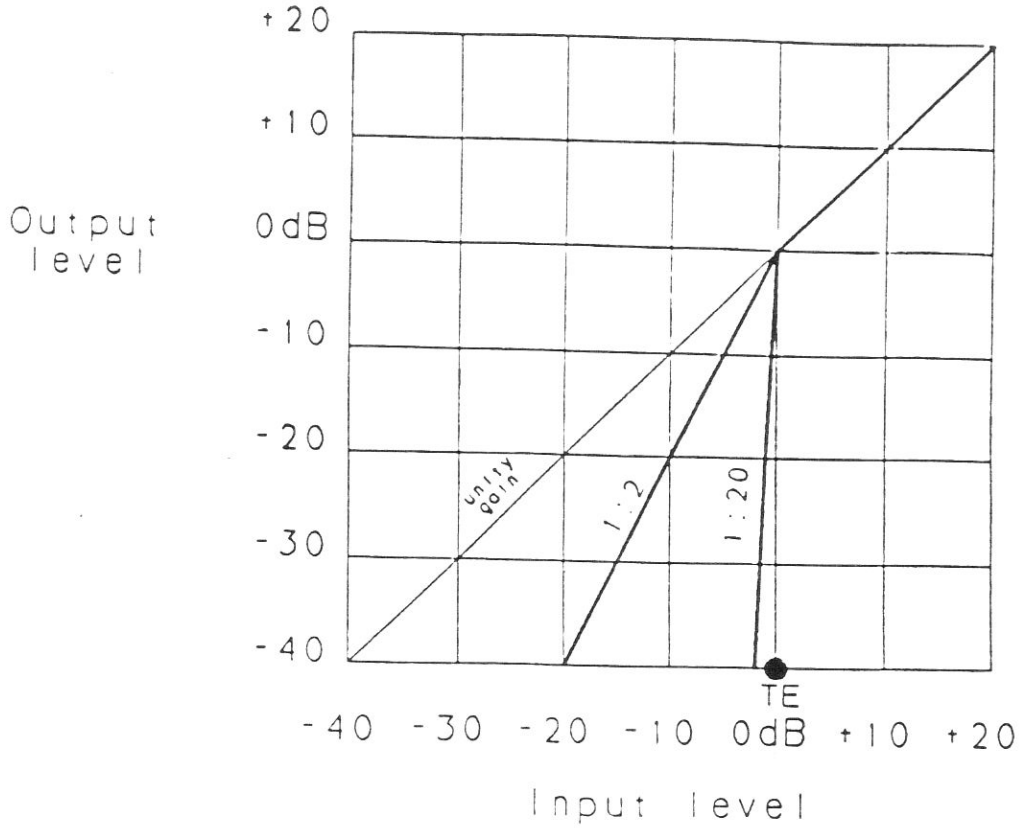

FIGURE 3

Input vs. Output Voltage Levels of a Steady State Tone
Through an Expander with Threshold @ 0 dB, Slopes of 1:2 and 1:20

Note that in the graph above, as the input signal level falls below the expansion threshold, TE, the processor gain is reduced. Each dB of drop below threshold, TE, of the input signal level causes the output level to fall 2 dB, thus the slope, or expansion ratio is 1:2. As the input signal exceeds the expansion threshold, TE, the processor recovers to unity gain. The process thus described is properly termed DOWNWARD EXPANSION. Higher expansion ratios of, for example, 1:10 or 1:20 are used for a process commonly called "gating" wherein the expansion ratio, TE, is set at some point just below the level of the desired signal such as a drum. Any input level exceeding the threshold then causes the processor to rapidly recover to unity gain. Although the reduction in the unwanted signal at the output is more dramatic, the threshold setting is very critical, and the result is not as unobtrusive as expansion using a gentle slope, especially for noise reduction purposes.

Attack and Release Structures. Dynamics processors cannot be allowed to operate instantaneously, as do normal amplifiers, following exactly the input waveform; the result is operation as a non-linear gain block which creates distortion. The objective in dynamics processing is not to alter the waveform of the signal, but rather to control the envelope of the signal as shown in Figure 4.

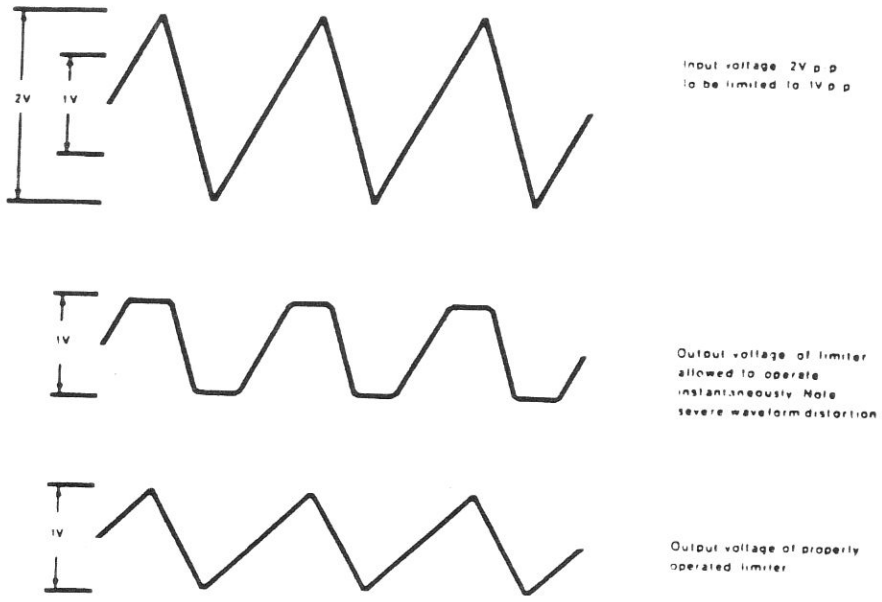

FIGURE 4
Steady-state Non-sinusoidal Tone Through Limiter Adjusted to Provide 6 dB of Limiting at Ratio of 60:1

The ideal processor should be able to distinguish the input waveform from its relatively slower envelope, and follow the envelope contour without regard to the frequency content of the waveform. This, in practice, is nearly impossible; the processor must react quickly enough to control the level of sudden bursts of high level signal and transients, thus, sometimes it must react to the waveform. The parameter which determines the processor's ability to respond to sudden bursts of high level program material and fast transients is called ATTACK TIME. The ATTACK TIME is generally characterized as the time required for a processor to alter its gain from some starting point to within a specified percentage of its required ultimate gain or attenuation. The attack time is measured starting the instant the signal causing the change in gain appears at the input of the processor. If the attack time is stated as the time required for a given amount of gain change, it must include settling time, which is the time required for the control element to recover from any overshoot or ringing and to stabilize at 100% of the specified gain change.

After the processor has "attacked" and altered its gain in order to control the signal level, it cannot be allowed to recover to its previous gain by simply following the input waveform as it falls in level. This, again, will cause waveform distortion. Some provision must be made to slow this recovery time, or RELEASE TIME. The problems associated with release times are analogous to those of attack times. The processor must follow the envelope of the input signal, but at times, must release relatively quickly.

Figure 5 illustrates attack and release characteristics of a limiter and an expander.

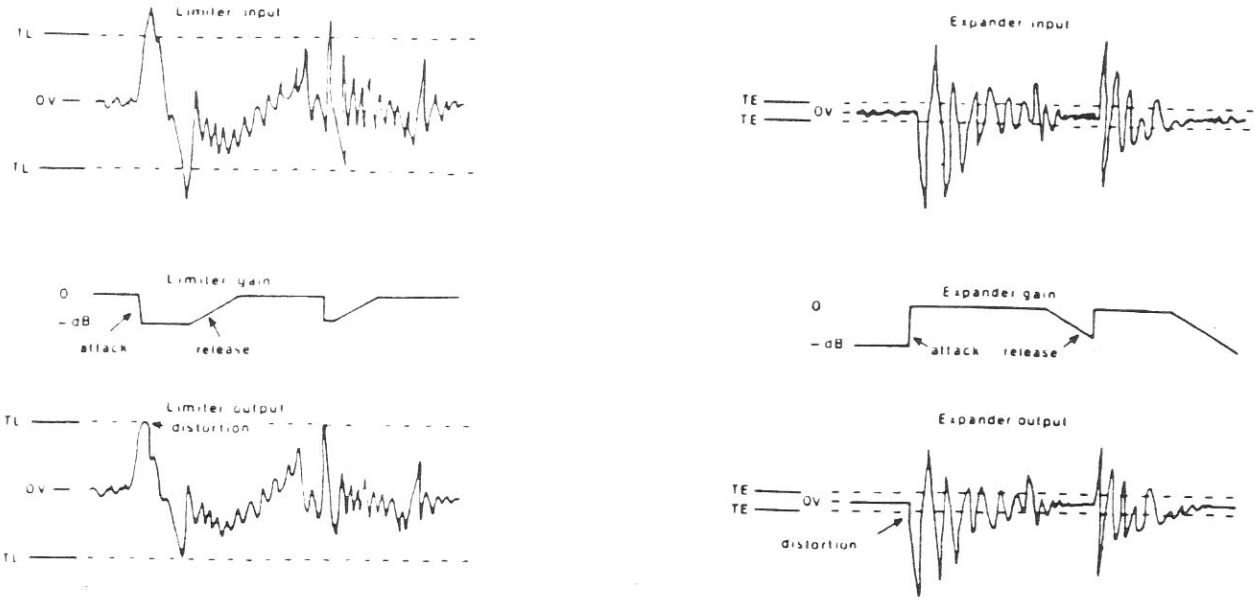

FIGURE 5
Drawing of Oscillographs Representing Musical Program Material Processed by a Limiter @ 60:1 Ratio and an Expander @ 1:20 Slope

As can be seen, a fast attacking limiter inherently causes some waveform distortion, as does a fast attacking expander. While the distortion induced in the limiter, when present in sufficient amounts, sounds like "clipping" or "fuzziness," that caused by an expander sounds like a "click," as if the signal has been turned on by a switch.

One solution to the problem of waveform distortion is to lengthen the attack time of the processor. While this approach does result in better dynamic integrity of the processed signal, it has certain drawbacks, the most serious being less dynamic control of the signal. Another approach to minimize waveform distortion is to select relatively long release times, thus not allowing the processor to recover fully before the next attack is called for. This approach suffers serious and obvious drawbacks: a limiter with a very long release time reduces the level of signals which do not require reduction, and an expander with a long release time will not attenuate unwanted signals properly. Both are forms of dynamic distortion, or unwanted, unnatural sounding gain changes. Dynamic distortion is variously described as "pumping," "breathing," "shimmering," etc. All processing devices introduce dynamic distortion in some amounts as a function of release time, however, automatic circuitry, when properly applied, can reduce dynamic distortion dramatically.

Detection Schemes. Since a dynamics processor must have a gain control element, and since this element must be electrically controlled, usually by a voltage, the dynamics processor must also possess some means to measure the level of the input signals, compare it to the threshold setting, and generate the appropriate control voltage to adjust the gain of the controlled element. The device which performs this function is called the DETECTOR. A very simple type of detector simply measures the voltage excursions of the input waveform. Such a detector is called a PEAK DETECTOR; it measures the peak excursions of either polarity of the input waveform. Peak detection is useful to prevent overloading of subsequent devices in any signal chain which may be peak level sensitive, such as in disk cutting and broadcasting. These detectors react very rapidly, typically exhibiting attack times of 10*u*s to 100 *u*s, in order to place an absolute limit on the peak voltage at the processor output. Peak limiting is the only processing scheme which can provide protection against overmodulation in disk cutting or broadcasting.

Most contemporary use of processing equipment is no longer for protection of following stages, but for the purpose of increasing the apparent loudness of a signal within the level constraints of a transfer medium, such as a tape.

The peak voltage of a signal unfortunately bears little relationship to how loud the signal sounds to a human. The human ear responds to power levels. Two waveforms of equal *loudness* are shown in Figure 6.

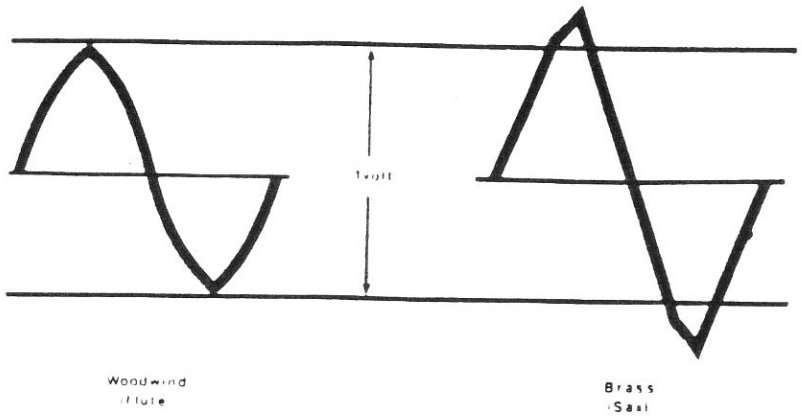

FIGURE 6

Simplified Waveforms of Same Loudness
from Woodwind and Bass Instruments

Note that the saxophone produces a more complex waveform than the flute. The two tones are of equal loudness to a human, but the peak voltage value of the saxophone waveform is much higher than that of the flute. A peak detector will cause this signal to be lower in loudness, when processed, because the peak detector reads the peak voltage level, not the power level. The more complex a waveform is, the more error exists between a peak responding processor's output and what the human ear hears as a "correct" loudness.

If the human ear responds to power levels, then some form of rms detection would seem to be in order. An rms responding detector circuit would produce an output analogous to the waveform's power level. This would correct the 10 to 14 dB discrepancy between a peak detector's indication

of level and the actual power contained in a complex waveform. Although the rms detection scheme is a vast improvement over peak detection, it still suffers from some drawbacks in that it does not, in itself, compensate for the frequency response of the human ear. Humans are woefully deficient in aural acuity both in the low frequency and high frequency portions of the audio spectrum. In the example of Figure 6, an rms detector would read the high frequency (harmonic) content of the saxophone waveform as contributing significantly to the waveform's loudness. Although the harmonic content does contribute significantly to the power level of the waveform, because the human ear is deficient in aural acuity at high frequencies, the ear does not interpret the harmonics as contributing significantly to the waveform's loudness. In order for a detection scheme to make sense to the human operator, it then must take into account the frequency response of the ear.

The VALLEY AUDIO DYNAMITE[3] uses a well-integrated systemic approach to dynamics processing which results in a multi-function device incorporating a release structure with a program controlled anticipatory release feature to eliminate modulation distortion and a detector scheme which takes into account the preferences of the listener by emulating the response of the human ear.

2. CONTROLS AND FEATURES

The following sections briefly describe the location and function of all the controls, meters and connectors found on the DYNAMITE^3.

2.1 REAR PANEL

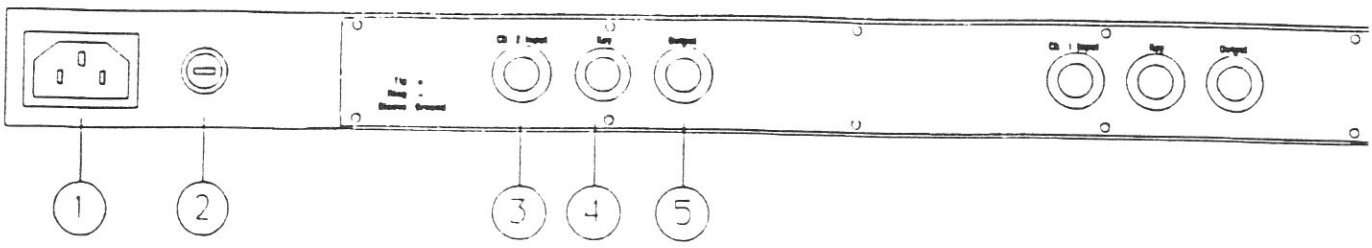

FIGURE 7

1. AC MAINS — An IEC power socket. AC power at the selected line voltage (110V or 220V NOM.) enters the DYNAMITE^3 here.

2. AC MAINS FUSE — This is either a ¼ amp, normal blow (110V) or a ⅛ amp, slow-blow (220V) in series with the AC line.

3. AUDIO INPUT — This three-circuit phone jack feeds the balanced audio input of the DYNAMITE^3. As indicated, this jack is a standard tip/plus, ring/minus, and sleeve/ground configuration. Two-circuit (mono) jacks may be used for unbalanced operation.

4. KEY INPUT — This three-circuit phone jack provides a direct connection to the unit's detection circuitry. This input is used when it is desired to have the AUDIO INPUT respond to the dynamics of an external or "KEYing" source. Examples of KEY INPUT use include voice-overs, frequency-sensitive gating and "envelope follower" effects. NOTE: INSERTING A PLUG INTO THE KEY INPUT INTERNALLY DISCONNECTS THE AUDIO INPUT FROM THE DETECTION CIRCUITRY. PLUG INTO THE KEY INPUT ONLY WHEN IT IS TO BE USED.

5. AUDIO OUTPUT — This three-circuit phone jack provides connection to the balanced, ground-sensing output of the DYNAMITE^3. Two-circuit (mono) jacks may be used for unbalanced operation.

2.2 FRONT PANEL

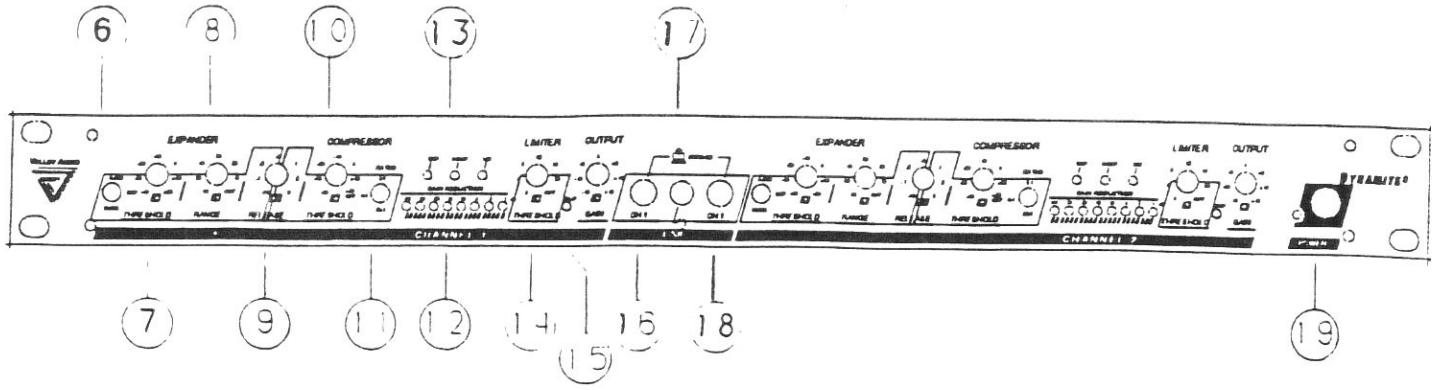

FIGURE 8

6. EXPANSION MODE SWITCH — Establishes the basic function of the expander section. GATE position sets the expander slope to 1:20 and the gate attack time to 20 *us*. EXP sets the slope to 1:2 and the attack to 10 ms. DUCK mode sets the attack time to 10 ms and adjusts the slope to 1:-20. Once the basic mode is set, the EXPAND section can be further adjusted with the EXPANDER THRESHOLD, RANGE and RELEASE controls.

7. EXPANDER THRESHOLD — For GATE and EXP modes, this control determines the signal level BELOW which gain reduction (gating) begins. For DUCK mode, the THRESHOLD setting determines the signal level ABOVE which gain reduction begins. The THRESHOLD is variable from -40 dB to +20 dB.

8. EXPANDER RANGE — Places a controllable limit on the amount of gain reduction which can be generated by the EXPANDER section during GATING, EXPANSION or DUCKING. Maximum possible gain reduction can be set anywhere between 0 dB and 60 dB with the RANGE control.

9. RELEASE — Determines the rate at which the gain is reduced after GATING or EXPANSION attacks as well as the rate at which gain is restored after LIMITING, COMPRESSING and DUCKING. This control affects all sections of the DYNAMITE^3. Variable from 50 ms to 5 s/20 dB.

10. COMPRESSOR THRESHOLD — When set from 0 to +20 dB, this control sets the signal level above which gain reduction occurs. When set from -40 to 0 dB, this control also computes an amount of "Make-up Gain" required to maintain a constant output level regardless of THRESHOLD setting. This feature is called Automatic Gain Recovery (AGR). The THRESHOLD is variable from +24 (out) to -40 dB.

11. COMPRESSOR RATIO SWITCH — Establishes the amount that the signal above the THRESHOLD level is reduced. For example, if the COMPRESSOR THRESHOLD is set to +4 dB, the RATIO is set to 3:1 and the INPUT level is +20 dB, the output signal will increase only 1 dB for every 3 dB that the input signal is above the THRESHOLD. Resultant output signals can be determined with the following equation:

$$\text{OUTPUT} = [(\text{INPUT} - \text{THRESHOLD}) \times (1/\text{RATIO})] + \text{THRESHOLD}$$

In this case, $[(20 - 4) \times (1/3)] + 4 = 9.33$ dB. For every 3 dB the signal level was above the THRESHOLD, the output only increased 1 dB. For a RATIO of 20:1, the output would be:

$$[(20 - 4) \times (1/20)] + 4 = 4.8 \text{ dB}.$$

For THRESHOLD settings from 0 dB to -40 dB, the RATIO also determines the amount of Make-up Gain that will be applied to the signal. For a graphical representation of this Automatic Gain Recovery feature, see Illustrations 6.1 - 6.8.

12. GAIN REDUCTION METER — Indicates the amount of gain reduction applied to the signal by the COMPRESSOR, EXPANDER and LIMITER sections. The display does NOT indicate the amount of GAIN added to the signal by the Automatic Gain Recovery circuitry or the OUTPUT GAIN control.

13. DYNAMIC PROCESS INDICATORS — Indicates which section of the DYNAMITE^3 is causing gain reduction. In situations such as interactive compression/limiting, it is possible for two indicators to be "on" simultaneously.

14. LIMITER THRESHOLD — Determines the signal level above which Limiting action commences. Variable from 0 db to +24 dB or "out."

15. CLIP INDICATOR — Indicates excessive level at the output of the DYNAMITE^3. The indicator starts to glow when the peak signal level is within 3 dB of clipping.

16. CHANNEL 1 BYPASS SWITCH — Provides a hard-wired audio bypass around the DYNAMITE^3 audio circuitry, shorting the input directly to the output. The meters will still indicate processing when the unit is bypassed but no gain reduction will occur.

17. STEREO LINK SWITCH — Couples the control circuitry in each section of Channel 1 to that in Channel 2 for maintaining center channel integrity when processing stereo information.
NOTE: WHEN USING THE STEREO LINK SWITCH, THE OPERATOR MUST SET THE OPERATING CONTROLS ON EACH OF THE TWO CHANNELS TO CLOSELY CORRESPOND TO EACH OTHER.

18. CHANNEL 2 BYPASS SWITCH — Same function as Channel 1 Bypass.

19. POWER SWITCH and INDICATOR — Connects AC mains voltage to internal power supply. The presence of line voltage is indicated by the power LED.

3. INSTALLATION

3.1 CONNECTING THE DYNAMITE^3 TO OTHER EQUIPMENT

The DYNAMITE^3 is configured to be connected to all commonly used audio equipment, whether balanced or unbalanced, high impedance or 600 ohm, line level or semi-pro -10 dB level. It is not intended for direct connection to microphones or to other sources having nominal signal levels below -20 dBv (100 mv RMS). The DYNAMITE^3 does not require any terminations for proper operation, nor does it provide terminations that might be required for other equipment. If the DYNAMITE^3 is fed from a source requiring termination, consult the instructions for that equipment and provide appropriate termination resistors external to the DYNAMITE^3

All audio connections are made through the 3-circuit phone jacks on the DYNAMITE^3 rear panel. As indicated, the tip is plus (hot or high), the ring is minus (low) and the sleeve is ground (shield or earth). To minimize hum in an installation, it is important to avoid multiple ground paths between the DYNAMITE^3 and the equipment it is connected to.

The following four diagrams show preferred and acceptable connection configurations for balanced and unbalanced operation. A balanced line is defined as a two-conductor shielded cable with each of the two insulated conductors carrying the signal but at opposing polarities and equal but opposite magnitudes with respect to ground. An unbalanced line is a single-conductor shielded cable with the center conductor carrying the signal and the shield at ground potential.

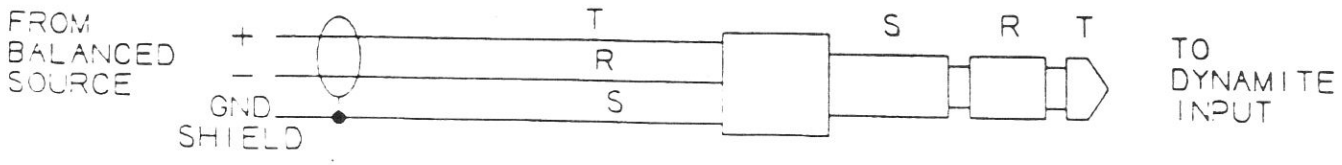

FIGURE 9

Recommended Connections when Feeding
DYNAMITE2 from Balanced Source

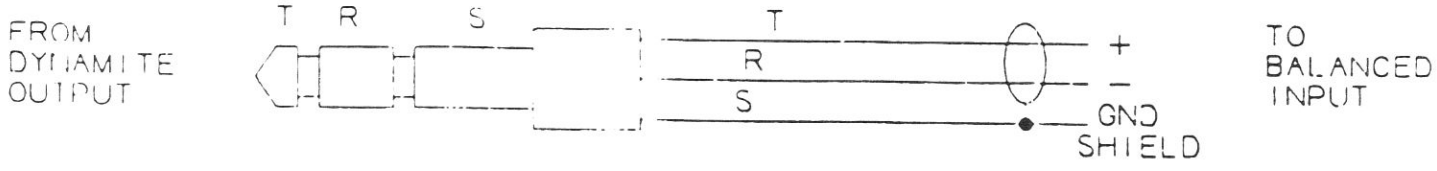

FIGURE 10

Recommended Connections for Feeding
Balanced Input from DYNAMITE^3 Output

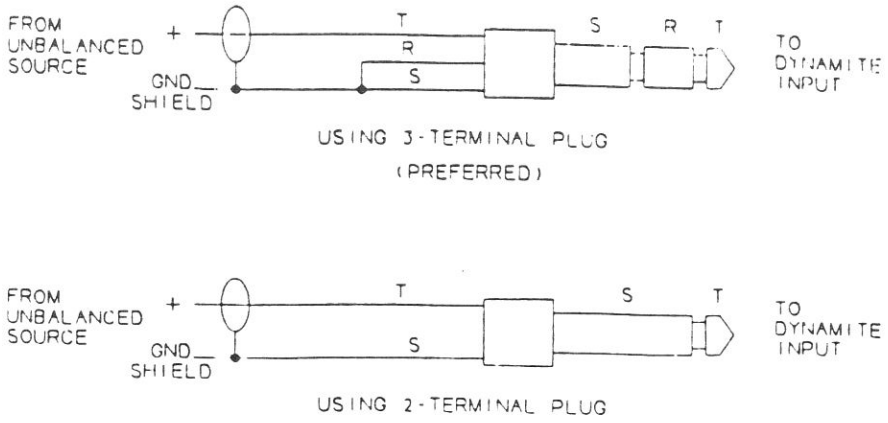

FIGURE 11

Recommended Connections when Feeding DYNAMITE^3 from Unbalanced Source

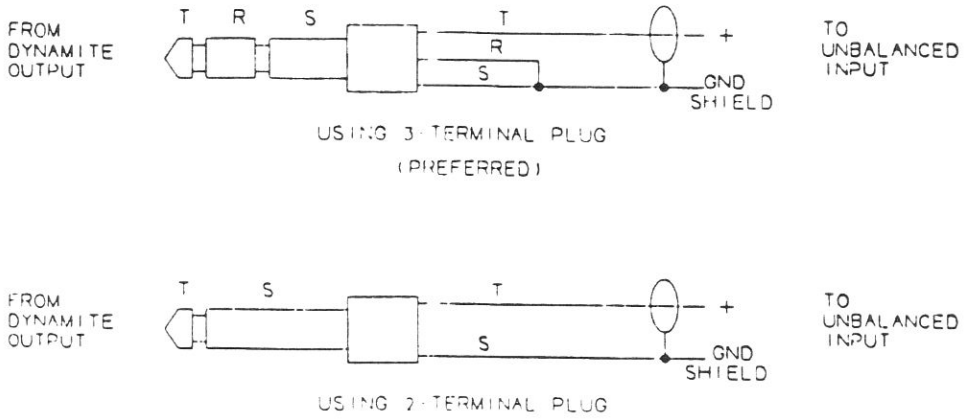

FIGURE 12

Recommended Connections for Feeding Unbalanced Input from DYNAMITE^3 Output

3.2 POWER CONNECTIONS

DYNAMITE^3 is connected to the AC power line by means of a standard 3-terminal IEC cord set. The safety ground is attached directly to the chassis of the unit. For prevention against possible shock, the DYNAMITE^3 should be powered only from a grounded, 3-terminal outlet.

If extensive hum is introduced due to ground loops, the internal jumper connecting 0 Vdc to the chassis safety ground (R5 on the parts overlay, Section 6.11) may be removed from the circuit board. DO NOT remove the safety ground lug from the chassis nor the grounding prong from the AC mains cord set.

The AC mains voltage may be changed to either 110v or 220v with the appropriate selection of an internal jumper (JP2/110v and JP1/220v) and the installation of the correct fuse (¼ A for 110v; ⅛ A Slow-Blow for 220v). This operation should only be conducted by a qualified service technician as it poses,a potential SHOCK HAZARD

4. OPERATION

This section will outline some of the basic operational settings and uses of the DYNAMITE^3. For the sake of presentation, we will categorize the uses under general headings. Unless otherwise noted, the following examples assume audio input applied to the INPUT jack of the DYNAMITE^3 and audio output taken from the OUTPUT jack.

4.1 LIMITING

Limiting is a method of confining the maximum output level of a signal to a pre-determined threshold. The DYNAMITE^3 LIMITER uses a 20 *us* attack peak detector and an infinite:1 limiting ratio for extremely fast and definite level control. The following setup example explains the use of the LIMITER controls.

A. Limiting for broadcast or speaker protection

In this application, the DYNAMITE^3 is used to limit the peak excursions of the output voltage in order to protect equipment following the DYNAMITE^3 in the signal chain.

Assume a nominal line input level to the DYNAMITE^3 of +4 dB and an overload level or clipping point of +18 dB on the following signal chain. Set the controls as follows:

EXPANDER MODE: NOT ACTIVE (will not affect operation).
EXPANDER THRESHOLD: NOT ACTIVE
EXPANDER RANGE: OUT. This disables the EXPANDER section.
RELEASE: Set initially to .5s.
COMPRESSOR THRESHOLD: OUT. This disables the COMPRESSOR.
COMPRESSOR RATIO: NOT ACTIVE
LIMITER THRESHOLD: Set for +15 to +16 dB. This will insure a 2 to 3 dB safety margin for the following signal chain in reference to its +18 dB clipping point.
OUTPUT GAIN: 0 dB
CHANNEL BYPASS: OPERATE
STEREO LINK: OFF if processing an independent channel.
ON if processing stereo program.

The RELEASE time should be readjusted while listening to the processed program. Remember that faster RELEASE times yield higher average output level at the expense of increased distortion.

4.2 COMPRESSION

Compression is a method of reducing the dynamic range of a signal by increasing the gain of the signal chain in the presence of signals below a given threshold and decreasing the gain in the presence of signals above the threshold. The following examples explain further the purpose and use of each control within the compressor section and also discuss the problems that compression corrects.

B. Compression for increased apparent loudness

The object of this type of Compression is to reduce the dynamic range of the input signal so the average level and meter readings are actually increased. This technique is useful for bringing individual tracks "out" in a mix as well as increasing the apparent level of an entire mix.

Assume a nominal input level of +4 dB. Set the desired channel of the DYNAMITE^3 as follows:
EXPANDER MODE: NOT ACTIVE (will not affect operation).
EXPANDER THRESHOLD: NOT ACTIVE
EXPANDER RANGE: OUT. This disables the EXPANDER section.
RELEASE: Set to .5s. This control may be readjusted by ear while listening to the program.
COMPRESSOR THRESHOLD: Set initially to -20 dB.
COMPRESSOR RATIO: 3:1
LIMITER THRESHOLD: OUT. This disables the LIMITER section.
OUTPUT GAIN: Set initially to 0 dB.
CHANNEL BYPASS: OPERATE
STEREO LINK: OFF if processing an independent channel
ON if processing stereo program

Adjust the THRESHOLD control to achieve the amount of increased loudness desired. Faster RELEASE time settings will yield increased loudness at the expense of increased distortion. Notice that though you have decreased the dynamic range of the signal with the compressor, the overall signal level is not reduced due to the unit's Automatic Gain Recovery circuitry.

C. Compression for smoothing out signal level variation

The object of this setting is to smooth out widely varying input levels such as vocalists with poor microphone technique, guitarists who switch from rhythm to lead-style playing frequently, weak snare drum tracks, bass players who go from gentle finger-style playing to "pop and slap" style in mid phrase and any other instrument which can be excessively dynamic.

Assuming a nominal input level of 0 dB,, set the controls as in example A. except for the following changes:

RELEASE: Set initially to .2s for most inputs. If distortion is heard on low frequency inputs, increase RELEASE time to .4 or greater.
COMPRESSOR THRESHOLD: Set initially to -10 dB.
COMPRESSOR RATIO: For signals such as distorted quitar and snare drum, set the RATIO to 6:1. For less dynamic signals, use 3:1.

Adjust the THRESHOLD control until the desired amount of consistency is achieved.

D. High Ratio Compression for Apparent Level Control

The object of this setting is to control the perceived loudness of various music and voice sources. This type of Limiting does not put an absolute ceiling on the output due to the 10 ms attack time that the COMPRESSOR section's Linear Integration Detector employs. This type of limiting yields higher levels as well as less modified sound quality than that of the Peak reading LIMITER section; it does this at the expense of increased THRESHOLD overshoot. When absolute Peak control is necessary, the LIMITER section must be employed.

Assuming a nominal input of 0 dB and a desired output of +4 dB, adjust the controls as in example A. except for the following changes:

RELEASE: Set initially to .3s.
COMPRESSOR RATIO: 20:1
OUTPUT GAIN: Because the output level will be held to 0 dB by the 20:1 RATIO of the compressor, the GAIN should be set to +4 dB.

Adjust the COMPRESSOR THRESHOLD for the desired amount of limiting action.

4.3 GATING AND EXPANSION

The basic purpose of expansion or noise gating is to remove background noise which is present between desirable foreground sounds. The user sets a THRESHOLD above which all signal is passed and below which signal is attenuated by a preset slope. A slope of 1:20 will lower the input signal 20 dB for every 1 dB the signal is below THRESHOLD. Expanders with slopes greater than 1:10 are considered noise gates because they "turn on" the signal chain only when a signal is present. An expander with a milder 1:2 slope has a more gentle "quieting" effect and is useful

for apparent noise reduction. The following examples explain the purpose of each of the controls within the EXPANDER section and also describe the various applications for expanders/gates.

E. Noise Gating

The objective of this setup is to "turn on" the signal chain when a signal is present and to "turn off" the signal chain when no signal is present. Noise gating is frequently used to "tighten up" drum sounds and to eliminate track leakage. Fast RELEASE times work well on percussive instruments with fast decay times. Longer release times will be needed for instruments with longer decay times such as cymbals.

Set the desired channel of the DYNAMITE as follows:

EXPANDER MODE: GATE
EXPANDER THRESHOLD: -40 dB INITIALLY — The THRESHOLD will be readjusted "by ear" with program present
EXPANDER RANGE: 60 dB INITIALLY
RELEASE: For bass drum, snare drum, try .05 to .2s.
For signals with longer decay times use .1 to .5s.
The decay of a signal can be altered with the RELEASE control. . . EXPERIMENT.
All other controls should be set to their inactive positions as follows:
COMPRESSOR THRESHOLD: OUT
COMPRESSOR RATIO: NOT ACTIVE (will not affect operation)
LIMITER THRESHOLD: OUT
OUTPUT GAIN: 0 dB unless overall gain or attenuation is desired.
CHANNEL BYPASS: OPERATE
STEREO LINK: OFF (no LED) if processing an independent channel.
ON (LED "on") if processing stereo program.

Audition the program to be processed and adjust the EXPANDER THRESHOLD up from -40 dB until only the desired signal is heard. If the decay of the program is "chopped off" by the gate, increase the RELEASE time. The RANGE control determines the maximum amount of gain reduction which can be performed by the EXPANDER section. Experiment with this control; it can be very useful in lessening the severity of the gating action.

F. Apparent noise reduction expansion

The purpose of this configuration is to reduce the apparent noise floor of a noisy source such as a cassette, vocal microphone or other noisy processors in a signal chain.

Set the DYNAMITE^3 as follows:

EXPANDER MODE: EXP
EXPANDER THRESHOLD: Set at 10 to 20 dB below the nominal input signal level. Readjust later.
EXPANDER RANGE: Start at 20 dB. This control sets the maximum amount of gain reduction the EXPANDER will exhibit when the input signal falls below the EXPANDER THRESHOLD.
RELEASE: Start at .5s.
The remaining sections are all set to their OUT positions as in example E. With program applied, the EXPANDER THRESHOLD should be adjusted to pass the desired program and gently attenuate unwanted noise in between desired program. The RANGE control can be readjusted to yield the least obtrusive noise reduction. The RELEASE control should be adjusted if the noise reduction "cuts in" too rapidly or too slowly.

4.4 INTERACTIVE PROCESSING

Any or all of the DYNAMITE^3's processing sections can be employed simultaneously. The following example describes how the 3 sections can be employed to provide complete dynamic control over an unpredictable source.

Assume a live speaking platform with one microphone and 20 speakers ranging from timid (-10 dB) to explosive (+20 dB). Also, the platform is surrounded by murmuring reporters (-25 dB). The goals are to provide a consistent (0 dB) level to the amplifiers from the console so that all the speakers can be adequately heard, to protect the loudspeakers from excessive level (+6 dB max.) and to remove as much background noise as possible. Given these circumstances, the DYNAMITE^3 should be set as follows:

EXPANDER MODE: 1:2 for gentle noise reduction
EXPANDER THRESHOLD: Start at -10 dB which is above the noise floor and just below the most timid speaker.
EXPANDER RANGE: Start at 20 dB.
RELEASE: Around .5s
COMPRESSOR THRESHOLD: -10 dB
COMPRESSOR RATIO: 3:1
LIMITER THRESHOLD: +5 dB. This allows 1 dB of safety margin
OUTPUT GAIN: 0 dB
CHANNEL BYPASS: OPERATE
STEREO LINK: OFF

As illustrated in Figure 13, the dynamic range of the various speakers which was 30 dB (+20 - (-10)) has been reduced to roughly 8.33 dB by the COMPRESSOR. The peak level has been limited to under +5 dB by the LIMITER and the noise floor has been reduced from -25 to -33.3 dB in the

absence of signal by the EXPANDER. Note also that in order for the COMPRESSOR section to increase the gain of signals below its THRESHOLD, it must add gain when no signal is present. This undesirable effect called "pumping up the noise floor" was neatly counteracted by appropriate use of the EXPANDER.

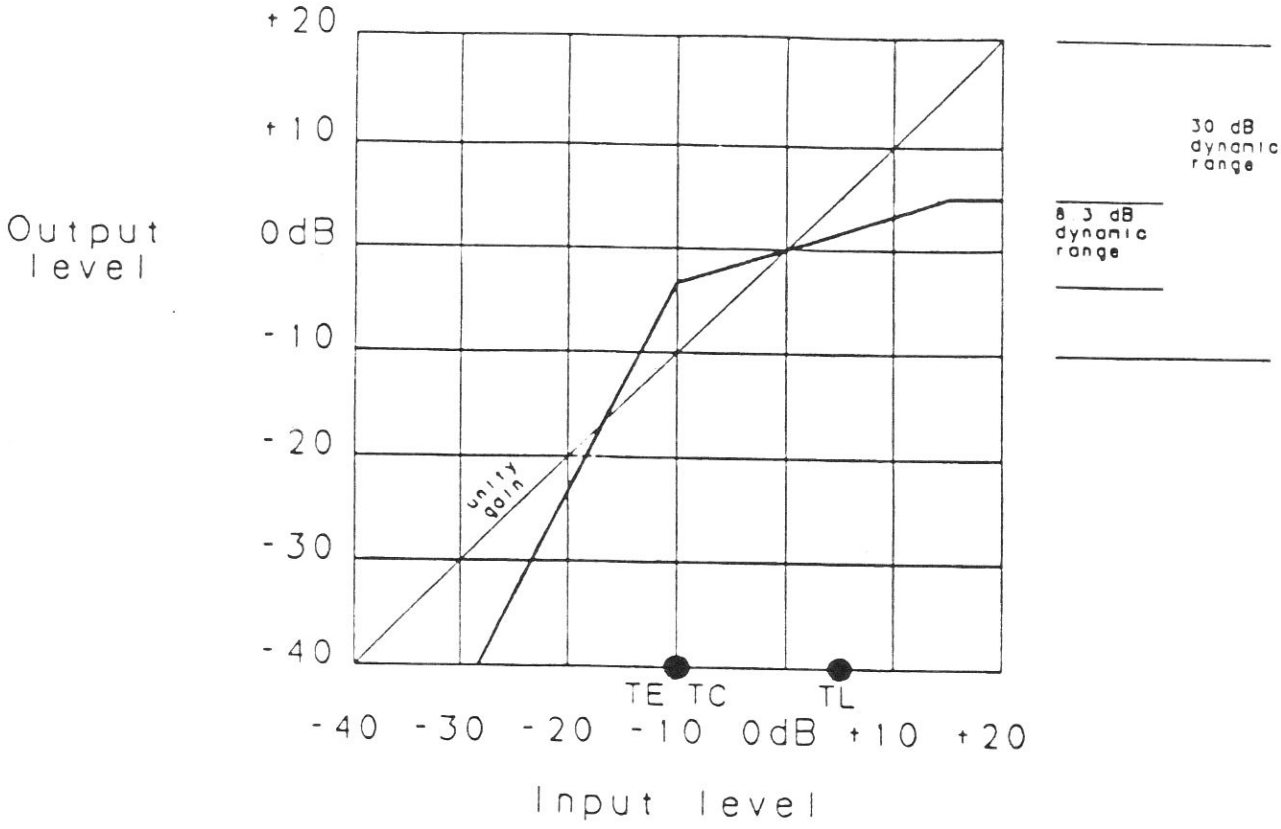

FIGURE 13
Interactive Expansion, Compression, Limiting

4.5 KEY INPUT APPLICATIONS

The KEY INPUT is used when it is desired to have the dynamics of the audio signal controlled by a separate or modified audio source. Do not insert a plug into the KEY input unless the KEY function is to be used; the KEY input also serves as a switching jack which disconnects the audio INPUT from the control section. The following examples will clarify the KEY function.

G. Voice-over or Ducking

The purpose of this configuration is to reduce the level of a program source (usually music) when an announcer speaks. The music effectively "DUCKS" beneath the speaker. Figure 14 illustrates the basic setup used for voice-overs.

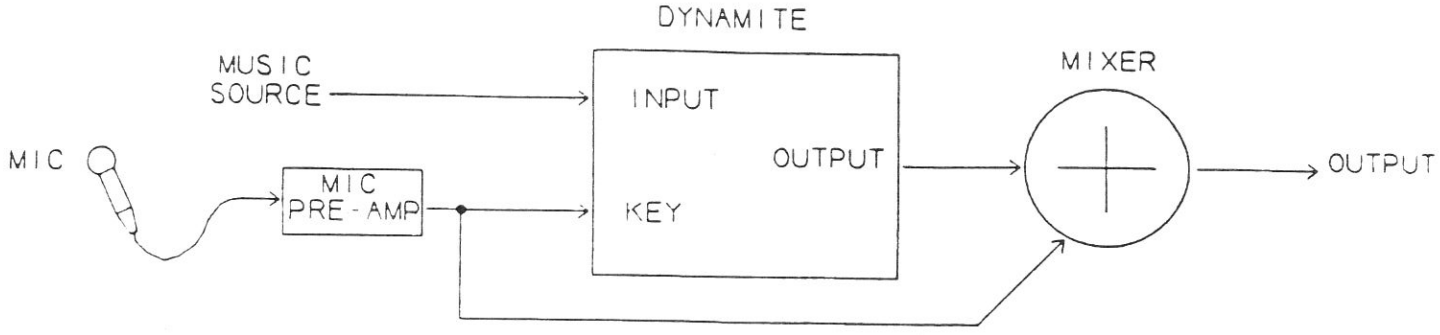

FIGURE 14
Basic Voice-over Setup

Input the speaker or controlling signal into the KEY input. The speaker's signal will have to be split and sent to the final output prior to the DYNAMITE^3 KEY input. Input the program source to be "ducked" into the audio INPUT of the DYNAMITE^3. Only the modified program source will be present at the DYNAMITE^3 OUTPUT. The KEY input signal acts only as a control source. Adjust the front panel controls as follows:

EXPANDER MODE: DUCK. This mode has a slope of 1:-20.
EXPANDER THRESHOLD: Set initially for 20 dB below nominal input level (-20 for 0 dB input)
EXPANDER RANGE: Start at 20 dB. This will cause the program source to be attenuated 20 dB whenever the speaker is talking.
RELEASE: Start with .5s/20 dB. A relatively long RELEASE time is usually most pleasing for voice-overs.

All other sections of the DYNAMITE^3 should be dialed "OUT" of the signal path. Adjust the EXPANDER THRESHOLD until the program is consistently "ducked" when the speaker is present. Adjust the RANGE if more or less attenuation of the program is desired.

H. Frequency-sensitive gating

In some instances, it may be advantageous to pre-condition the frequency response of the control signal. For instance, in recording drums where it is desired to have only one drum per track, frequency-sensitive gates are commonly used. An equalizer is inserted in the KEY path to accentuate the prominent frequencies of the desired drum. Using a bass drum for example, boost would be added to the KEY INPUT signal at around 90 Hz and all other high frequencies would be cut. This will keep the bass drum gate from being "turned on" by the snare drum, cymbals and hi-hat. See Figure 15 for a diagram of this example. The operation of the EXPANDER controls is the same as in example E., "Noise Gating."

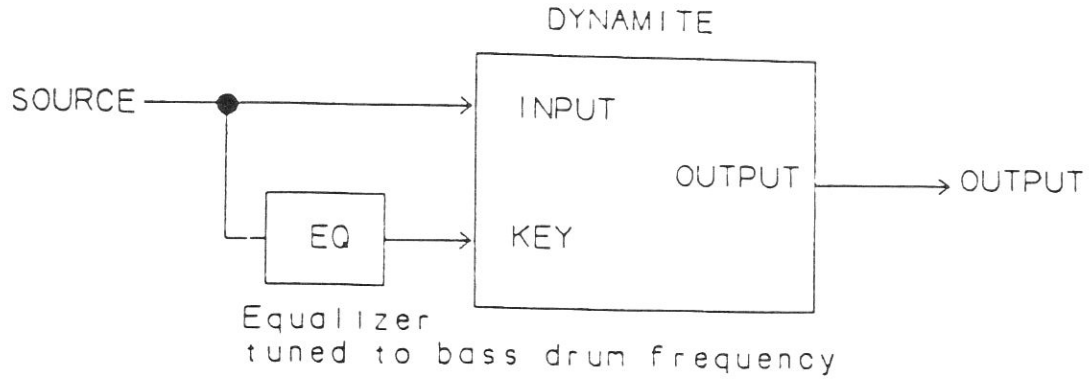

Figure 15
Basic Frequency-sensitive Gating Setup

I. De-essing

By adding a small amount of high-frequency boost (6-10 kHz) to the KEY input, the COMPRESSOR section can be used as an effective "De-esser." By emphasizing the offending frequencies into the KEY input, the compressor produces more attenuation in response to the "ess" input than to normal speed. See Figure 16 for a diagram of this example. The operation of the COMPRESSOR controls is the same as in example C., "Compression for smoothing out signal level variation."

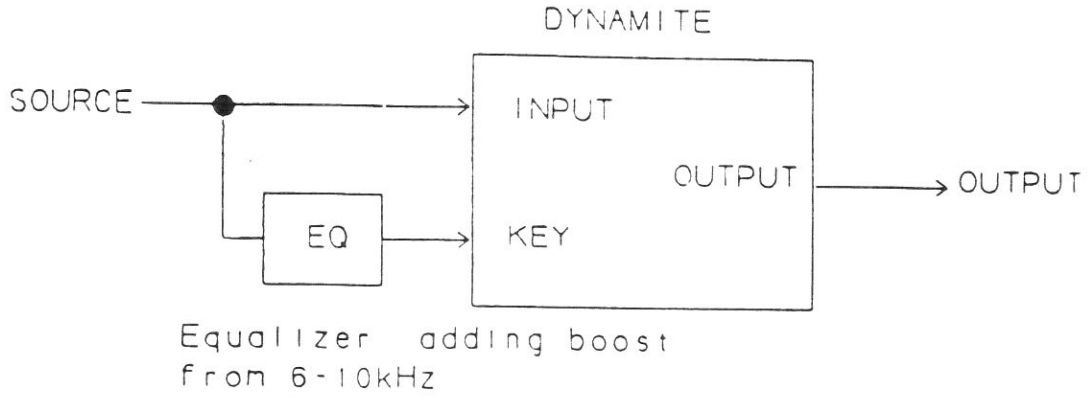

Figure 16
Basic De-essing Setup

4.6 STEREO OPERATION

Depressing the stereo Link switch ties VCA control parameters for both channels together. This is true for the Expander/Gate as well as the Compressor and Limiter sections. For balanced weighting of the left and right signal control parameters, set the same-labelled controls on both channels similarly. This will insure that both channels will respond to common material equally, even though processing is the same from both channel's VCAs. Setting the channel controls unevenly will "favor" one channel's control signal over another on that parameter, even though the processing will be identical to both channels. This selectable "sensitivity" or preference to one channel's control signal over another when Linked, can compensate for or provide useful effects.

4.7 AUTOMATIC GAIN MAKEUP JUMPER

A user-moveable jumper provides the ability to swith the output level gain makeup from Automatic to Manual. Both channel's jumpers are readily identifiable approximately 3" behind the front panel on the top of the circuit board. Remove the top cover with the two rear panel screws (middle-rear) and the two screws on either chassis side. The jumpers are labelled "A" for Automatic, "M" for Manual. In Automatic operation, gain is introduced as thr compression Threshold is lower and more compression takes place. In Manual, the output level control must be turned up to compensate for greater compression amounts.

5. WARRANTY

VALLEY AUDIO PRODUCTS INC. warrants its products to be free from defects in workmanship and material under normal use and service for a period of twelve months from the date of purchase. If a VALLEY AUDIO PRODUCTS INC. device or its related enclosure or power supply is believed to be defective, the device may be returned, shipment prepaid, within twelve months after date of purchase, accompanied by proof of purchase. After inspection, if the product is found to be defective in workmanship or material, it will be repaired or replaced at VALLEY AUDIO PRODUCTS INC.'s election, free of charge, and returned transportation prepaid to any point in the United States.

If inspection of such products does not disclose any defect in workmanship or material, VALLEY AUDIO PRODUCTS INC.'s regular service charges will apply. This warranty is stated in lieu of any and all other warranties, whether expressed, implied or statutory, and the sole liability of VALLEY AUDIO PRODUCTS INC. under this warranty is to either repair or replace, at VALLEY AUDIO PRODUCTS INC.'s election, the product or its related components. Any incidental damages are expressly excluded.

The Model 460 is carefully calibrated and tested to very tight tolerances at the factory before shipment. The device requires no periodic maintenance. Modifications or unauthorized repair during the warranty period voids all warranties. Full service documentation is available from the factory for out-of-warranty repair.

CAUTION: Removal of the enclosure top cover will expose hazardous line voltages. Refer servicing to competent technical personnel.

6. ILLUSTRATIONS

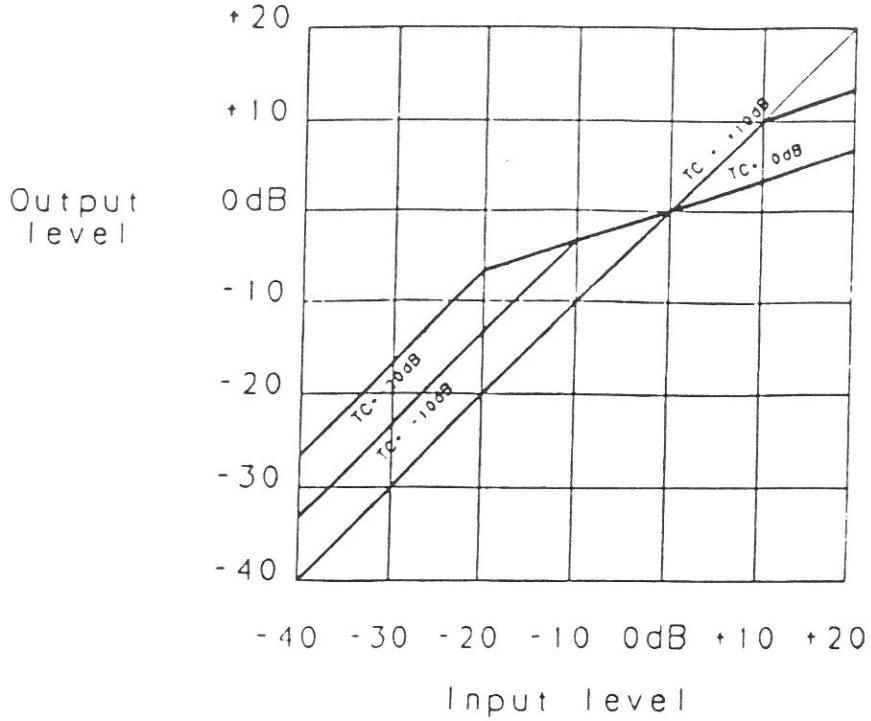

6.1 Effect of THRESHOLD on Compressor with 3:1 Ratio
TC = Compressor THRESHOLD in dB

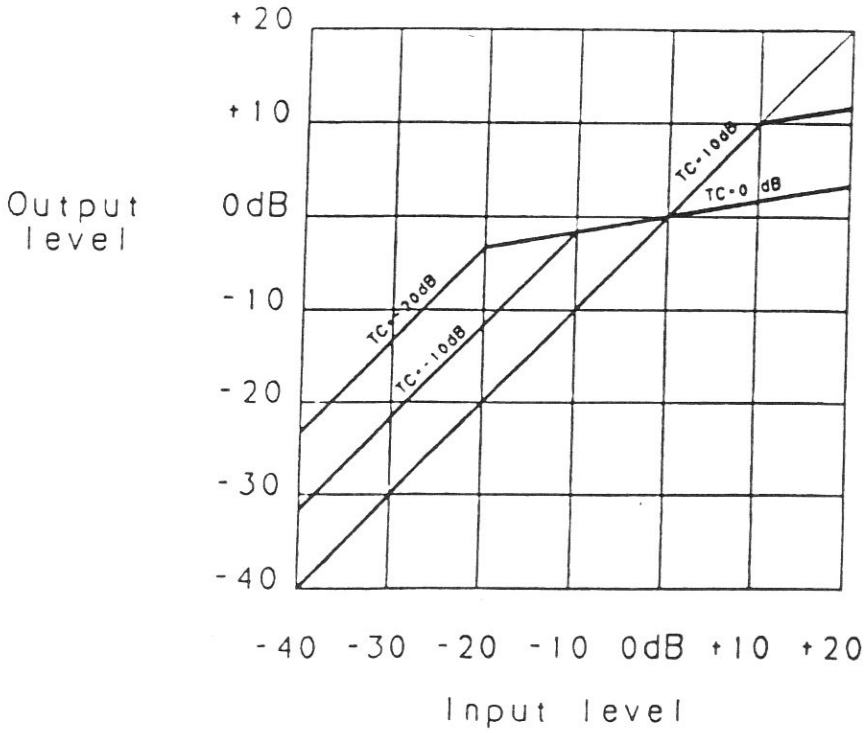

6.2 Effect of THRESHOLD on Compressor with 6:1 Ratio
TC = Compressor THRESHOLD in dB

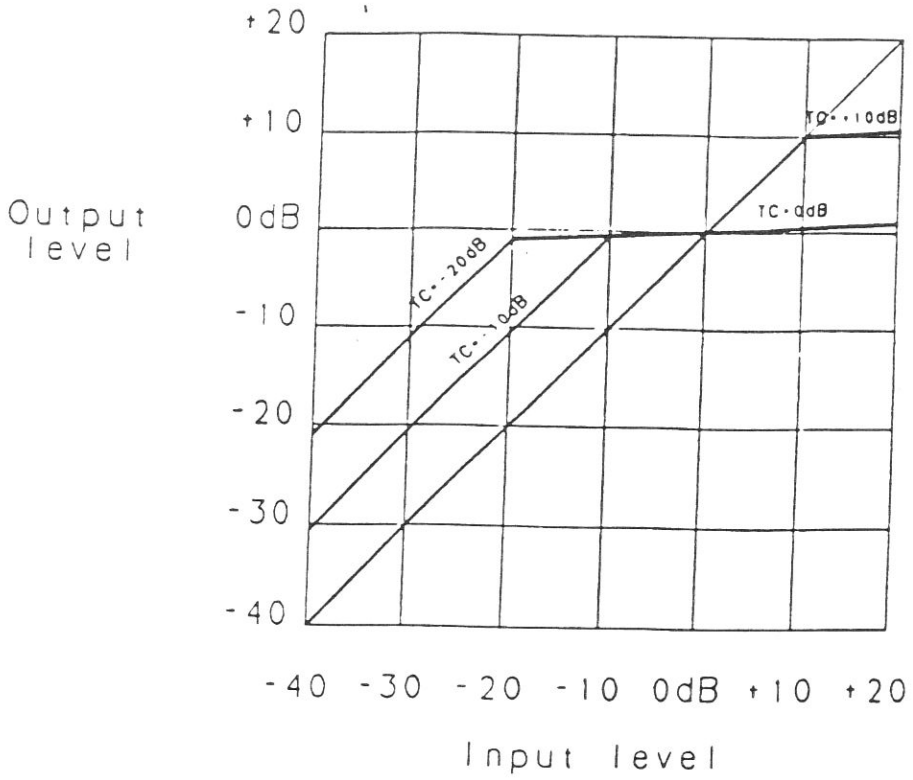

6.3 Effect of THRESHOLD on Compressor with 20:1 Ratio
TC = Compressor THRESHOLD in dB

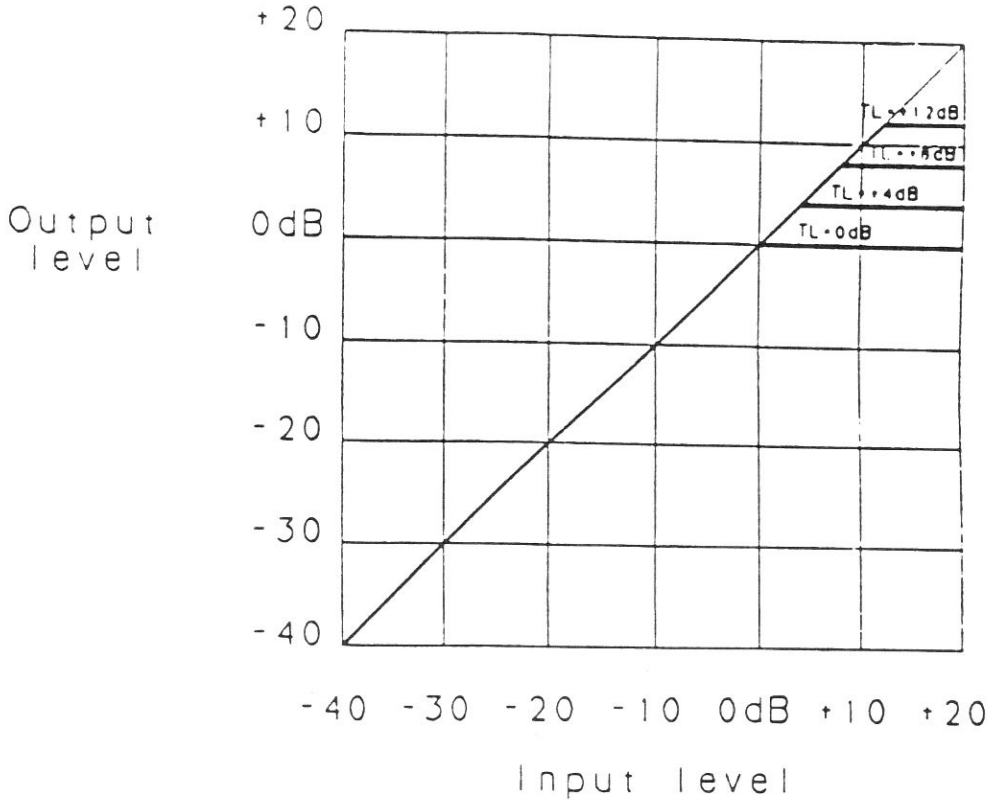

6.4 Effect of THRESHOLD on Limiter
TL = Limiter THRESHOLD in dB

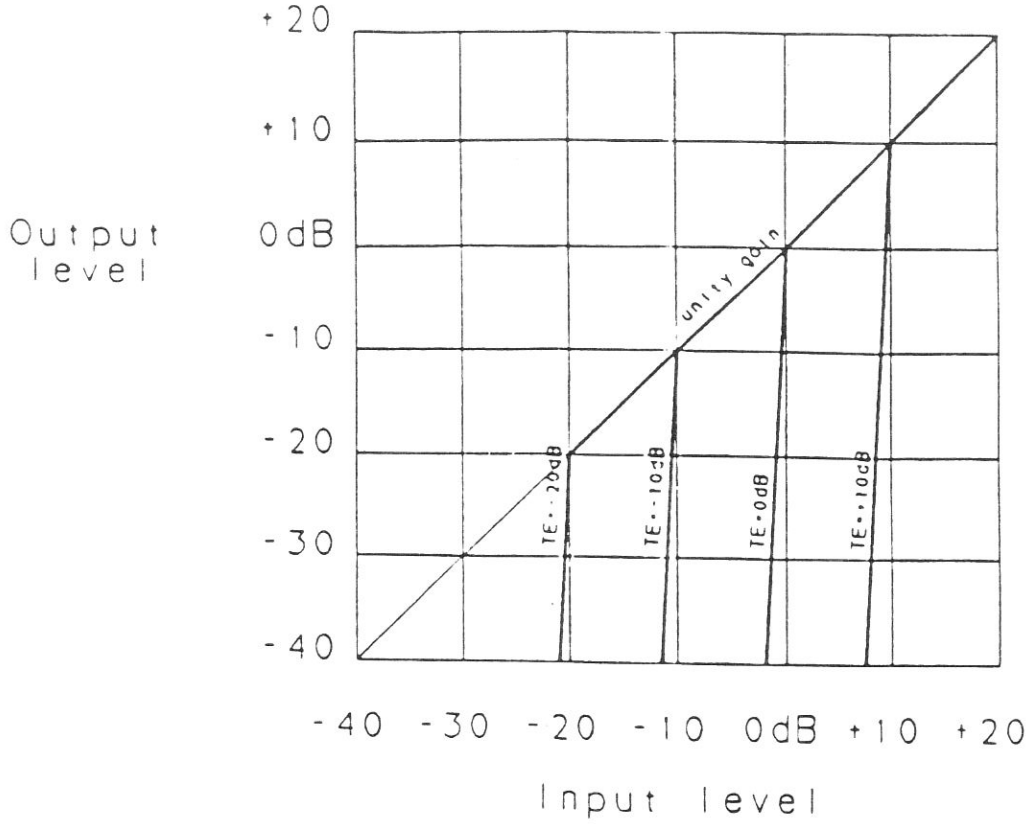

6.5 Effect of THRESHOLD on Expander in GATE Mode
TE = Expander THRESHOLD in dB

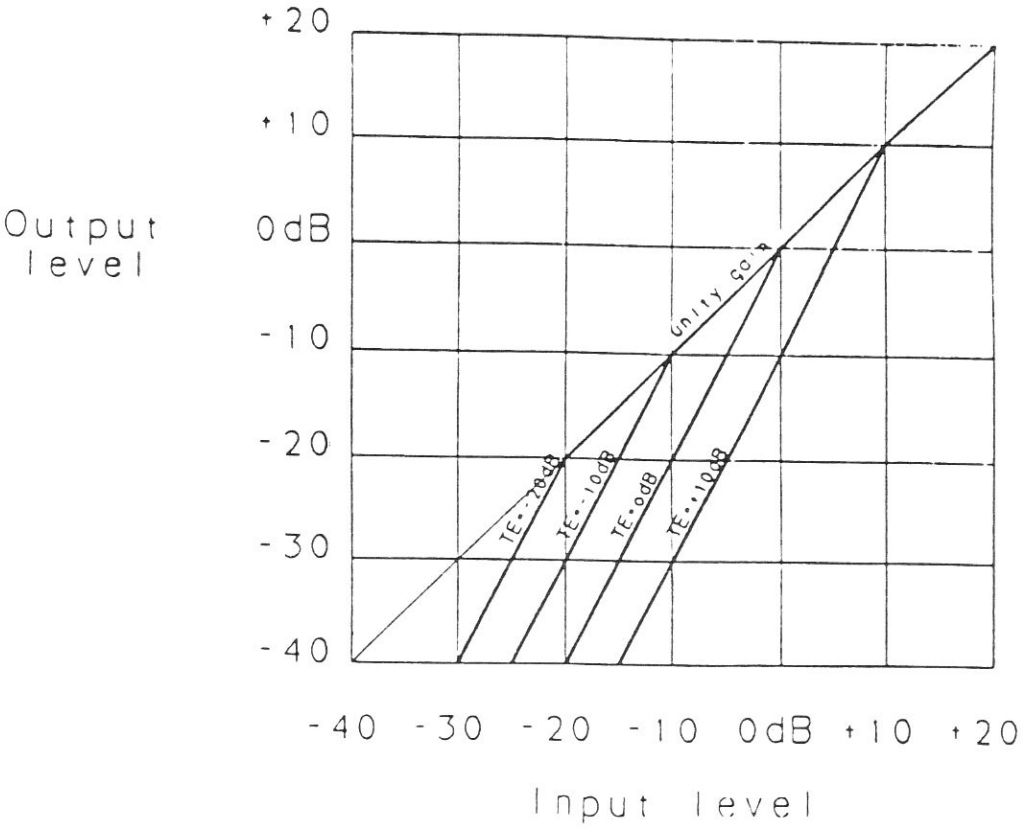

6.6 Effect of THRESHOLD on Expander in EXP Mode
TE = Expander THRESHOLD in dB

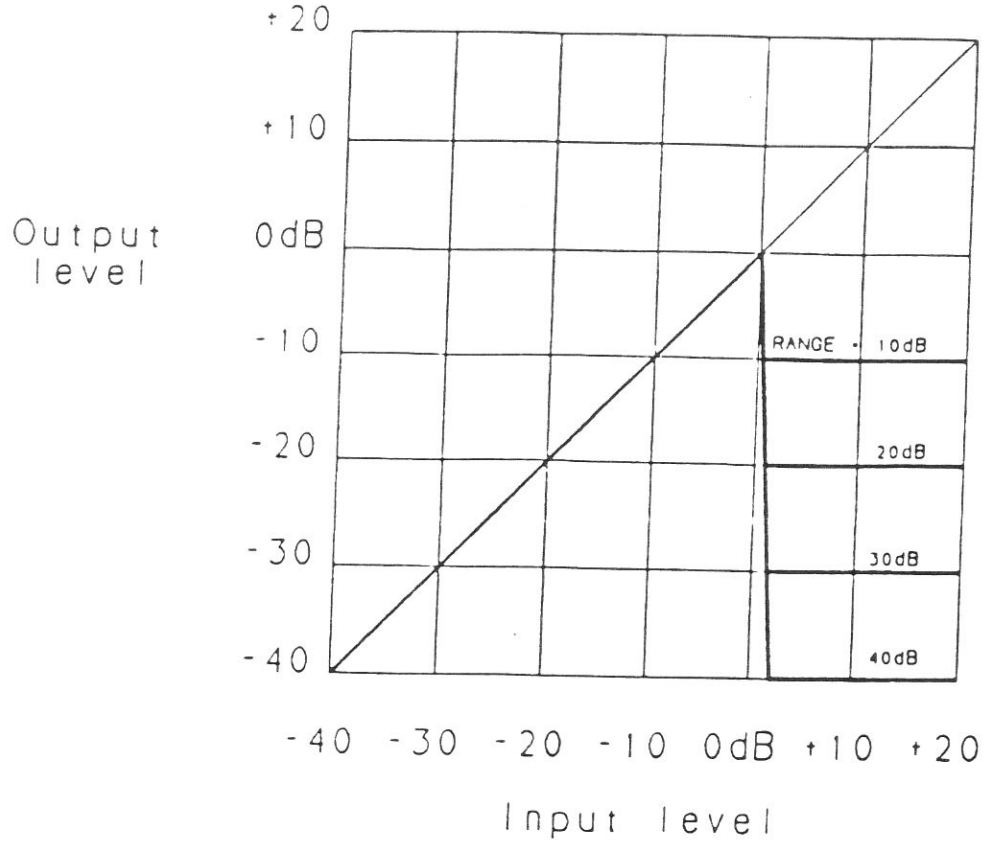

6.7 Effect of Range Control on Expander in DUCK Mode
THRESHOLD = 0 dB

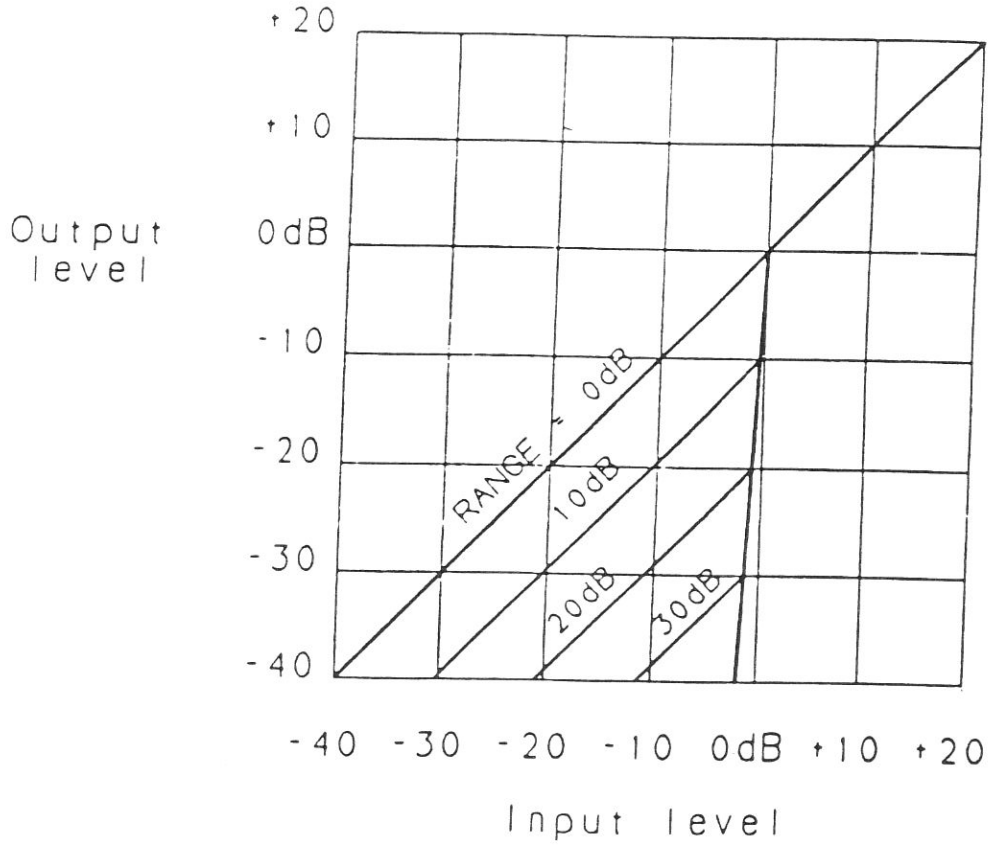

6.8 Effect of Range Control on Expander in GATE Mode
THRESHOLD = 0 dB

6.9 DYNAMITE^3 Block Diagram

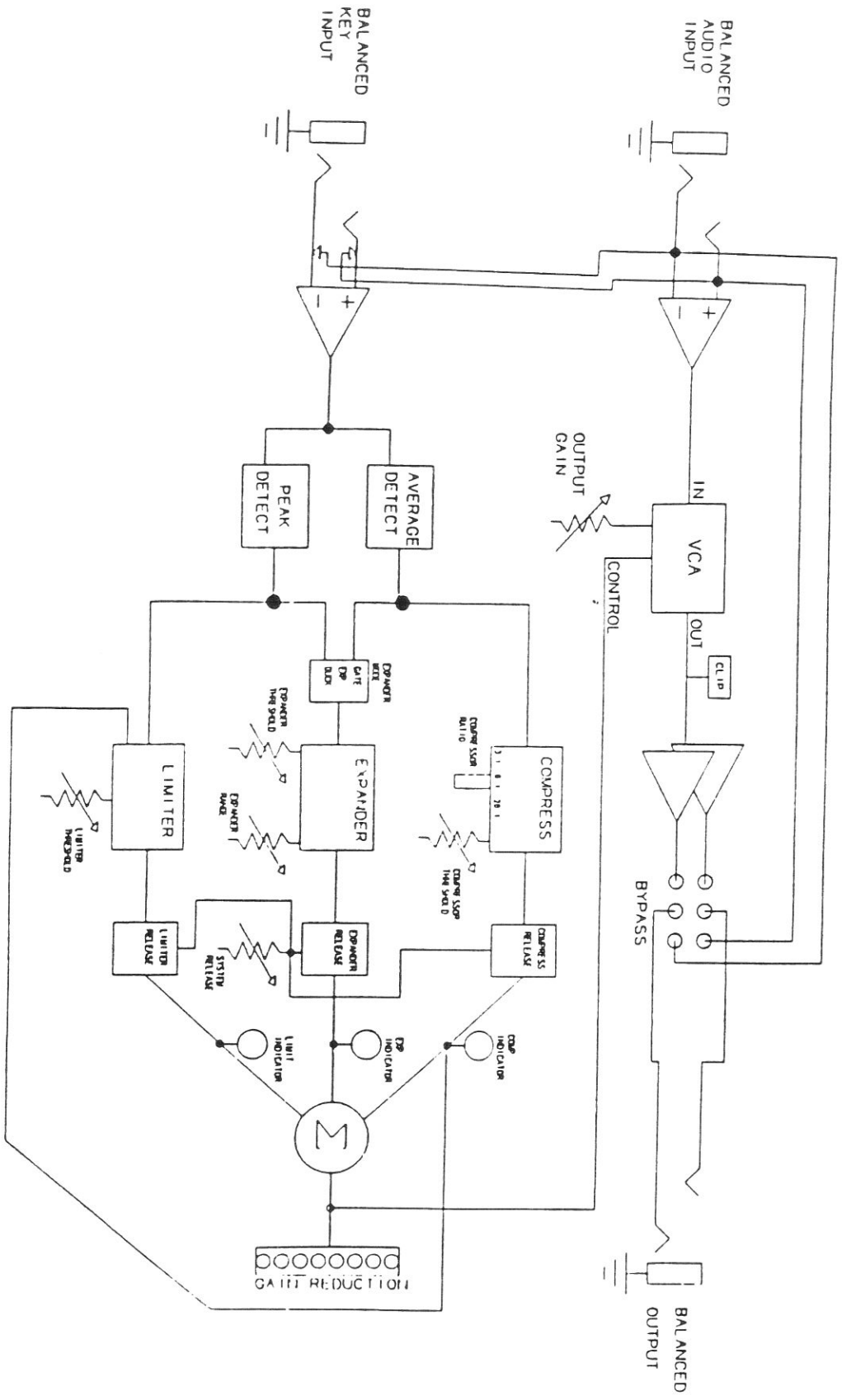

Notes:

VALLEY AUDIO

A Division of GALAXY AUDIO

625 East Pawnee Avenue
Wichita, KS 67211
USA 67211

U.S. Toll Free: 800.800.4345
Phone: (316) 263-2852
FAX: (316) 263-0642

430-2 SMT-0294VAPI

© 1994