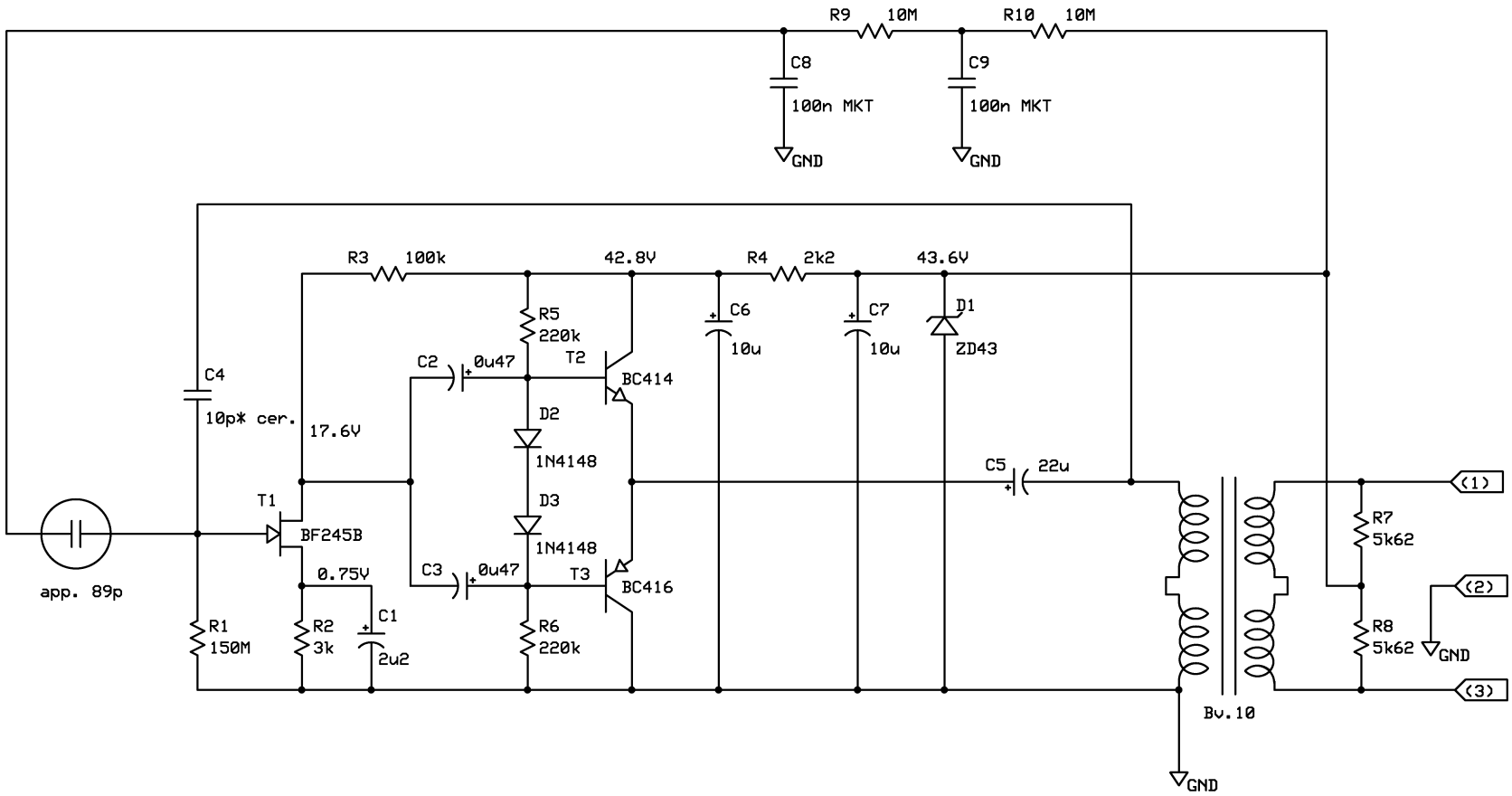

Notes:

- voltages shown are meassured DC voltages
- value for C4 (10p) is a guess and not meassured
- C1, C2, C3 and C5 are 35V tantalum caps

Neumann KM253		
Transistor Version		
drawn by: Olaf Matthes	Rev 1.0 30.04.2006	Page # or name