Thank you for purchasing the EBS WahOne pedal!

The EBS WahOne is the only versatile wah-wah pedal designed specifically to enhance your bass groove.

This unique pedal is based on the classic concept, created by die cast chrome. With an easy dial-in design the choice is yours - use it as a wah-wah, envelope filter or volume pedal.

We hope you'll enjoy using the EBS WahOne pedal!

The EBS Team

WahOne

EBS PROFESSIONAL BASS EQUIPMENT



USERS MANUAL

THE CONTROLS

MODE SWITCH - Selects the wah-wah or volume mode. The mode LED indicates the actual mode, green for volume and red for wah.

SETTINGS SWITCHES:

TUBE SIM.- Activates the tube simulator, which adds extra harmonics and warmth to your sound, useful for spicing up your sound. Otherwise this mode operates as the normal position.

REV. - Reverses the action of the pedal when pressed.

WAH-WAH CONTROL:

RANGE- Sets the range of the filter. In lowest position the range is between 75-400 Hz, mid position 200-1.000 Hz and highest position 600-3.500 Hz.

LOW PASS - Selects either low pass (envelope type filter), or band pass (standard wah-wah filter).

Hi-Q - Controls the amount of effect by narrowing the filter in hi-q mode.

SIDE PANELS

INPUT - Connect your instrument here.

OUTPUT- The output from the pedal. Connect this output to an amplifier or another pedal.

DC POWER JACK - Connection for an external DC power supply. Use only EBS original power supply, AD-9, if you are using this option.

ACTIVE/PASSIVE SWITCH - Set this switch to ACTIVE position if you are playing an active instrument or if you are using another pedal before the EBS WahOne. If you are playing a passive instrument, set this switch to PASSIVE.

SAMPLE SOUND SETTINGS

The following examples below show a few of the many sonic possibilities of the EBS WahOne.

CLASSIC WAH

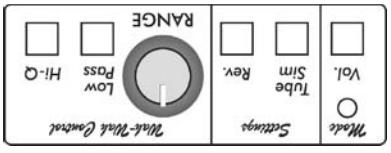

FUNKY WAH

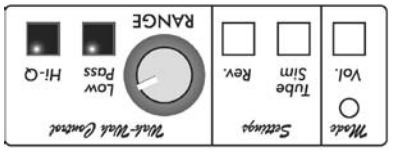

FREAKY WAH

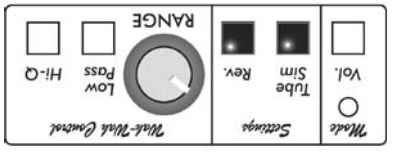

MY PERSONAL SOUND

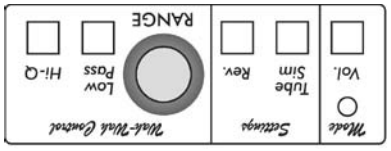

How to use the EBS Phantom Power™

The EBS Phantom Power System™ makes it possible to power the EBS WahOne with 9V DC directly from the EBS Drome, GormET, Fafner HD350 and TD650 amps. Here is a step-by-step instruction on how to do this.

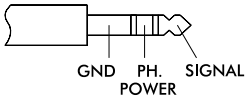

1) Connect a stereo ¼" instrument cable (TRS, tip-ring-sleeve) between the EBS WahOne pedal and the EBS amp.
2) Activate the phantom power on the amp. This is made with a flick of a switch on most EBS amps. Please consult the manual for the EBS amp you are using.
3) Connection done. You should now have power in the pedal, even if the input jack is left open.

EBS Phantom Power™ Trouble Shooting

Checkpoint	Action if answered NO
1) Is a ¼" STEREO cable used between the pedal and the amp?	- Replace cable to a ¼" STEREO cable.
2) Is there power available on the RING connection of the ¼" plug?	- Make sure the phantom power is activated on the amp. - Check cable.

Note that only the pedal that is directly connected to the EBS amp can be powered with phantom power. This means that if you have more than one pedal, ONLY THE LAST one can use the EBS Phantom Power™.

Trouble Shooting Guide

Please consult the following checkpoints, before consulting one of the authorized EBS service centers.

Checkpoint	Action if answered NO
1) Does the cable(s) work properly?	- Replace cable(s).
2) Are the ¼" plugs properly connected all the way in?	- Push the ¼" plugs all the way in.
3) Are the Instrument cable attached to the Right (input) jack, and the Amp cable connected to the Left (output) jack?	- Reconnect input and output jacks.
4) Does the pedal have a battery, and is the battery OK?	- Put a new battery in the pedal.
5) Does the indicator LED light when pressing the foot switch alternatively?	- Replace battery.
6) Does the instrument work?	- Check the instrument at your nearest service center.
7) Does the amplifier work and is the volume turned up?	- Turn up volume or check the amp at your nearest service center.
8) If you are using a DC adapter, Are you using an EBS AD-9?	- Check the voltage and polarity of the adapter you are using.*

**EBS Sweden AB guarantees no error free operation when using other DC adapter than the EBS AD-9. Warranty is void if higher voltage than 9.3 V has been used to feed the EBS WahOne pedal.*

Block Diagram EBS WahOne

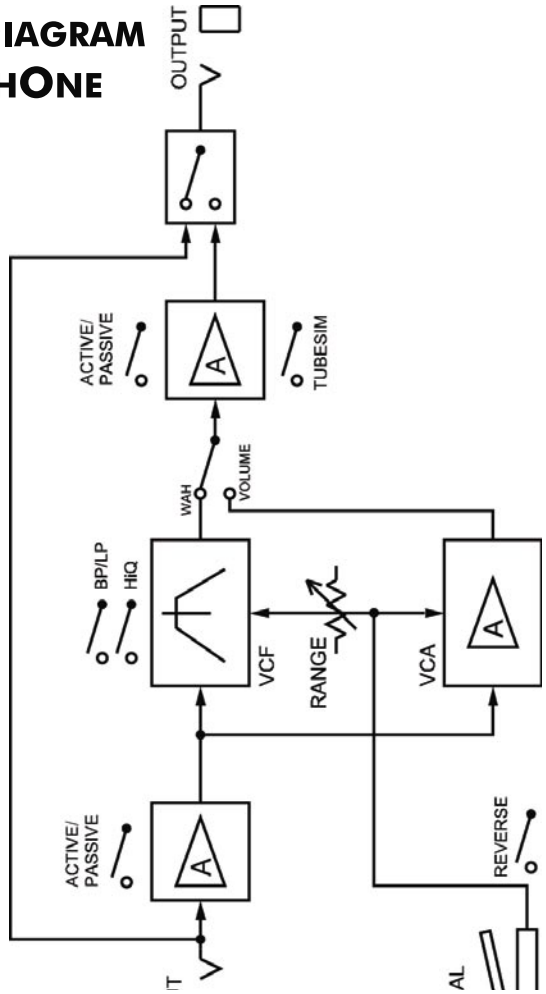

Technical Specifications EBS WahOne

Nominal Input Level		- 8 dBv (active) or - 20 dBv (passive)
Input Impedance		1 Mohms
Frequency Response	+0/-3 dB	30 - 20.000 Hz
Pedal Modes		Wah-Wah or Volume
Filter Frequency Range		75 - 3.500 Hz
Filter Q	min / max	4.5 / 16
Filter Mode		Low or Band Pass
Output Impedance		500 ohms
Nominal Output Level		-10 dBv
Power Requirements		9V DC, 25 mA max.
Dimensions	Width	95 mm (3.7")
	Height	75 mm (3.0")
	Length	270 mm (10.6")
Weight		1.8 kg (4.0 lbs.)

Specifications are subject to change without notice.

*EBS recommends the use of the EBS AD-9 DC adapter, which supplies a well stabilized power to the EBS WahOne and all your other pedals that operate with a 9V battery. The high current capacity, 650mA, makes it possible to supply all pedals with only one adapter, EBS AD-9!

Professional Bass Equipment

EBS Sweden AB · Framnäsbacken 12 · SE-171 66 Solna · Sweden
Phone: +46-8-7350010 · Fax: +46-8-7350015