MINIMOOG PATCH BOOK

Copyright 2002 www.oldschool-sound.com

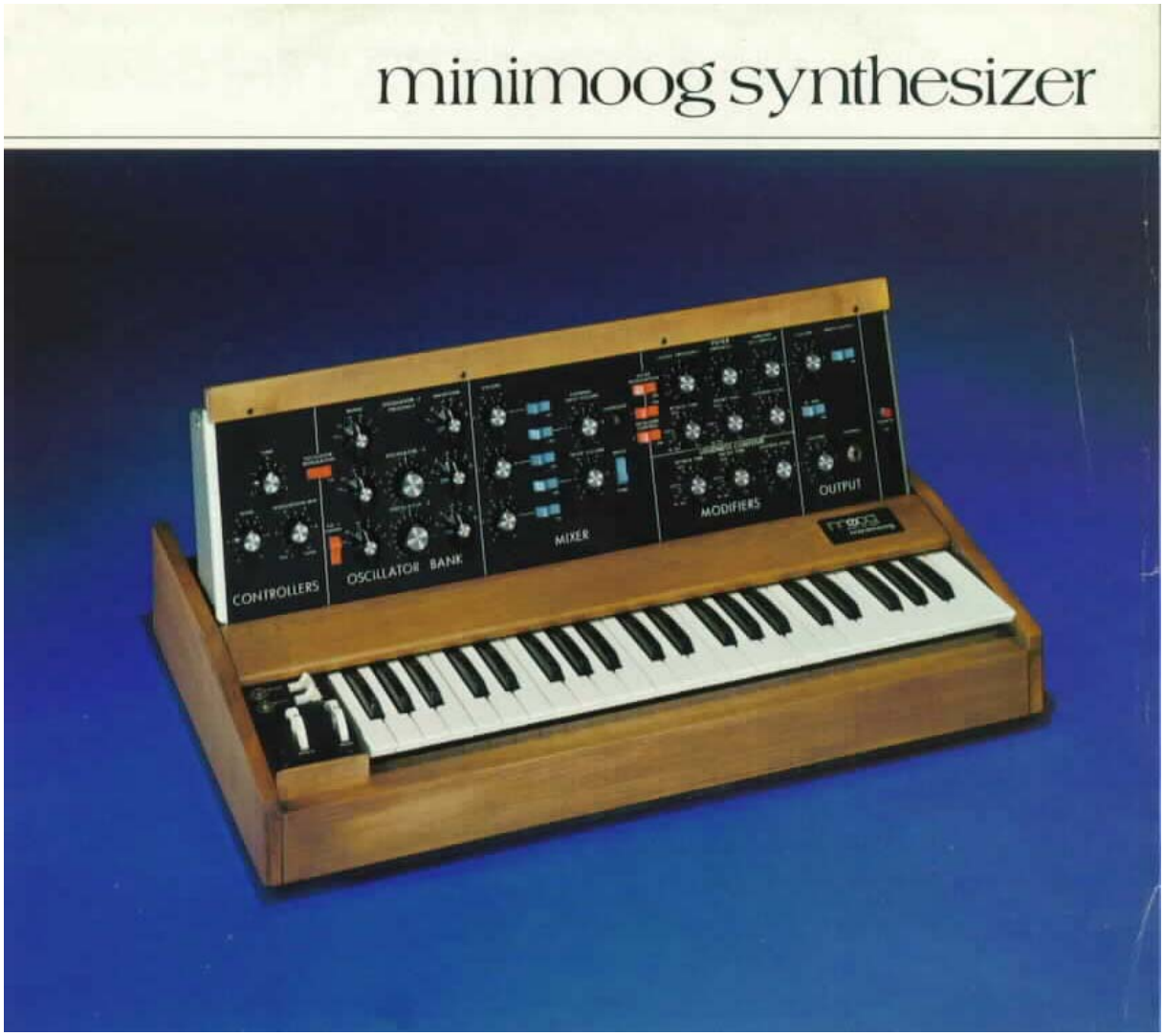

SOUND: ELECTRIC GUITAR, BASS/TREBLE

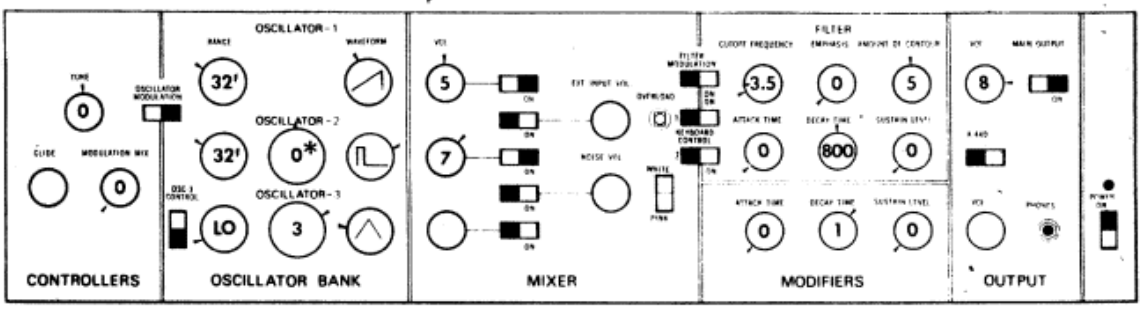

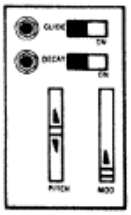

BASS: 32′ Range
TREBLE: 8′ Range with Keyboard control #2 on.

NOTES: *OSCILLATOR-1 and OSCILLATOR-2 in unison. Use Pitch wheel for pitch-bending. Apply modulation to long tones. Sound will decay gradually when key is held; for pro-longed sustain turn both SUSTAIN LEVEL controls to 5. MOOG 1121 Foot Switch may be used to control the DECAY switch to create gradual decays without finger sustain.

SOUND: BALALAIKA (MANDOLIN)

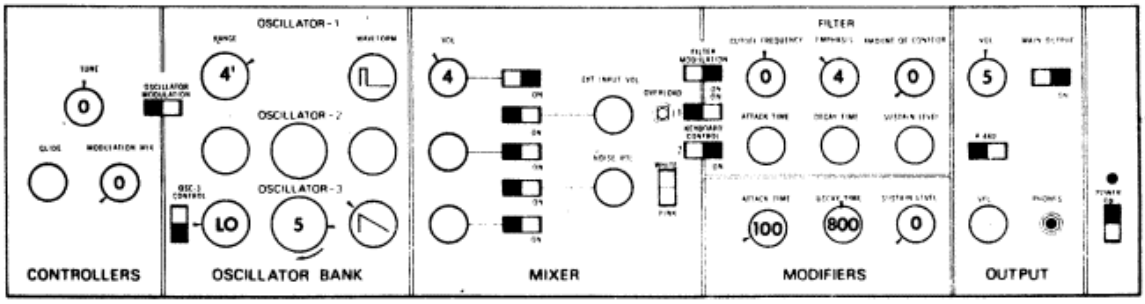

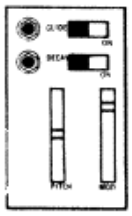

NOTES: Vary OSCILLATOR-3 FREQUENCY control to alter repetition rate. For mandolin, reduce CUTOFF FREQUENCY control to —1.5.

SOUND: SHAMISEN (Chinese plucked instrument)

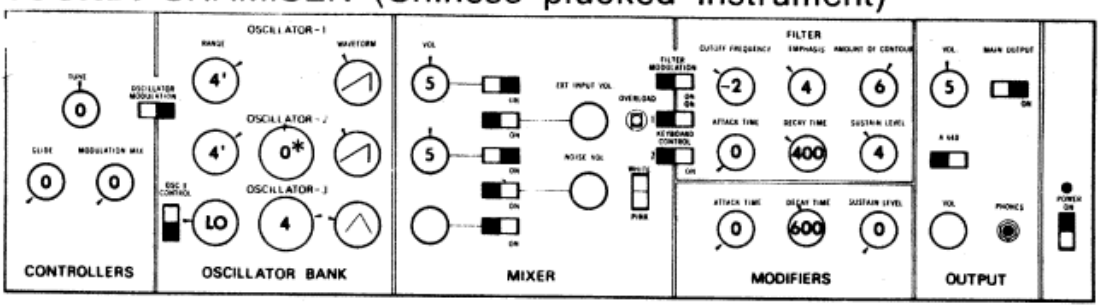

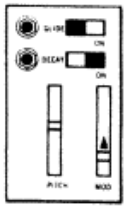

NOTES: *OSCILLATOR-1 and OSCILLATOR-2 in unison. Play black keys only in middle of the keyboard.

SOUND: HARPSICORD

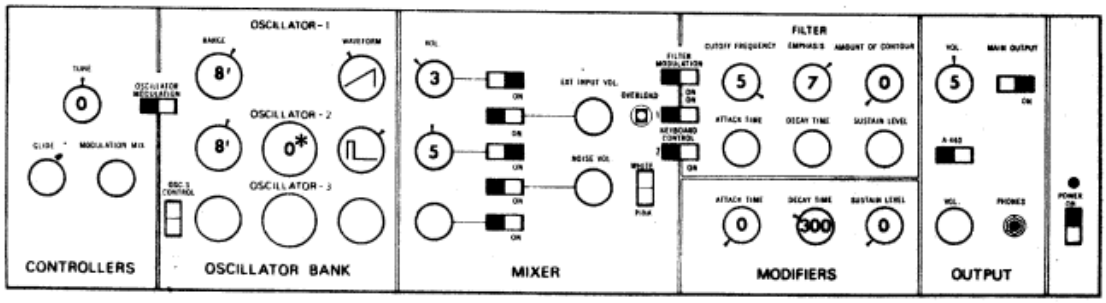

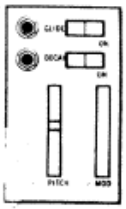

NOTES: *Oscillator-1 and OSCILLATOR-2 in unison. Increase DECAY TIME control to 700 for lower register of keyboard.

SOUND:. ELECTRIC PIANO

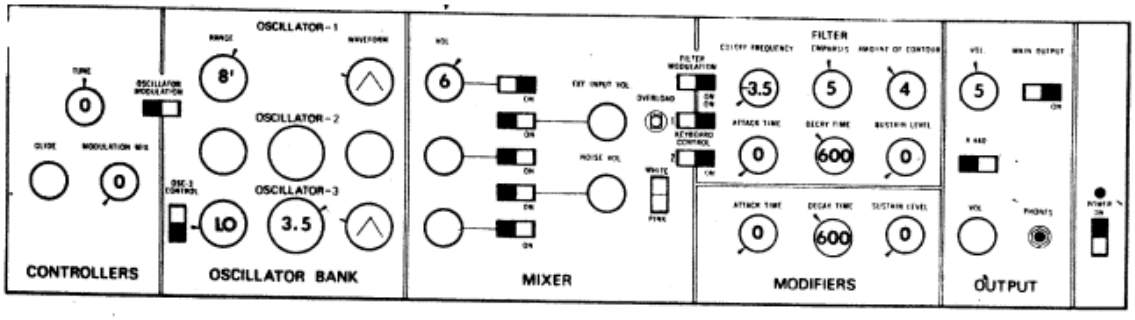

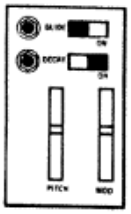

SOUND: VIOLIN

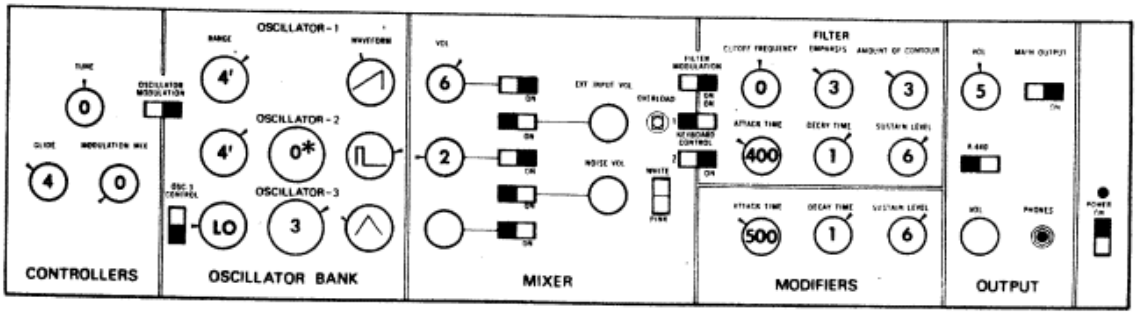

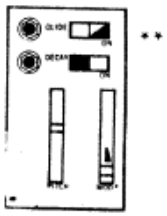

NOTES: *OSCILLATOR-1 and OSCILLATOR-2 in unison. Apply modulation gradually on sustained tones. Use MOOG 1120 Foot Pedal to control loudness. Use MOOG 1121 Foot Switch to control Glide on/off for portamento effects.

**Glide when appropriate.

SOUND: VIOLA

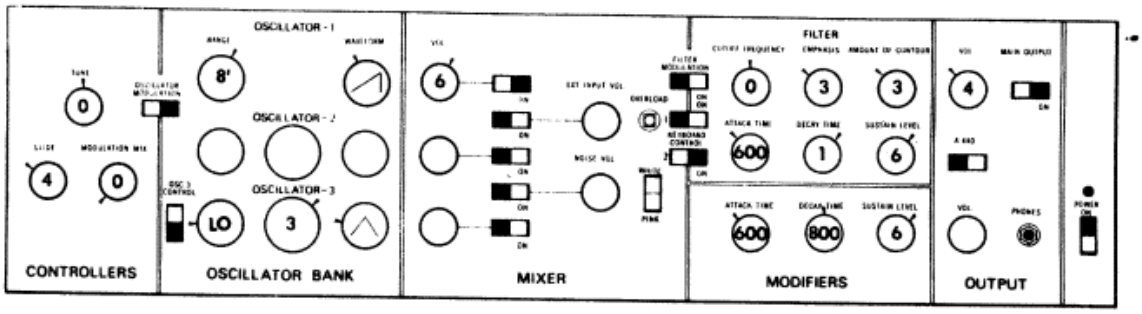

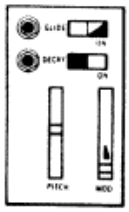

NOTES: Apply modulation gradually on sustained tones. Use MOOG 1120 Foot Pedal to control loudness. Use MOOG 1121 Foot Switch to control GLIDE on/off for portamento effects.

SOUND: CELLO

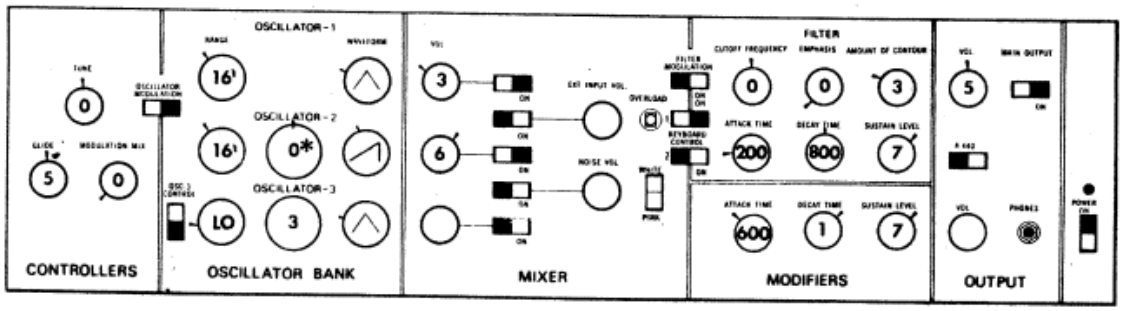

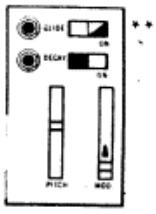

NOTES: *OSCILLATOR-1 and OSCILLATOR-2 in unison. Apply modulation gradually on sustained tones. Shorten ATTACK TIME setting on LOUDNESS CONTOUR for rapid passages. Use MOOG 1120 Foot Pedal to control loudness. Use MOOG 1121 Foot Switch to control GLIDE on/off for portamento effects.

**Glide when appropriate.

SOUND: BASS VIOL, BOWED

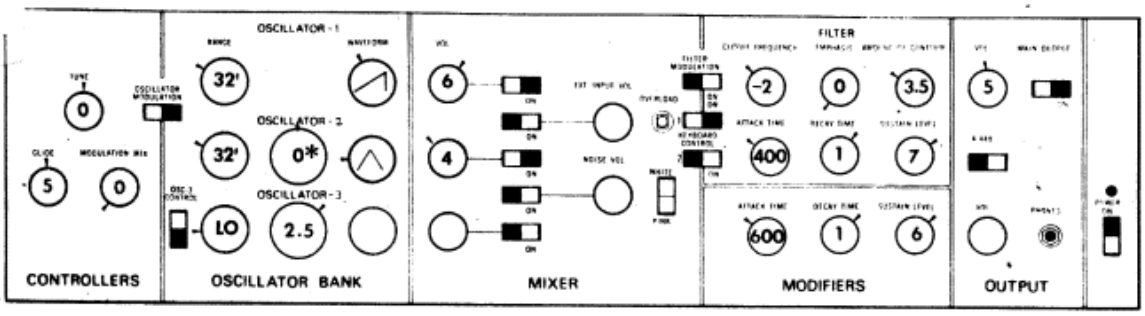

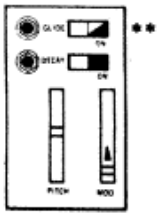

NOTES: *OSCILLATOR-1 and OSCILLATOR-2 in unison. Use modulation sparingly on sustained tones. Use MOOG 1120 Foot Pedal to control loudness. Use MOOG 1121 Foot Switch to control GLIDE on/off for portamento effects.

**Glide when appropriate.

SOUND: BASS VIOL, PLUCKED

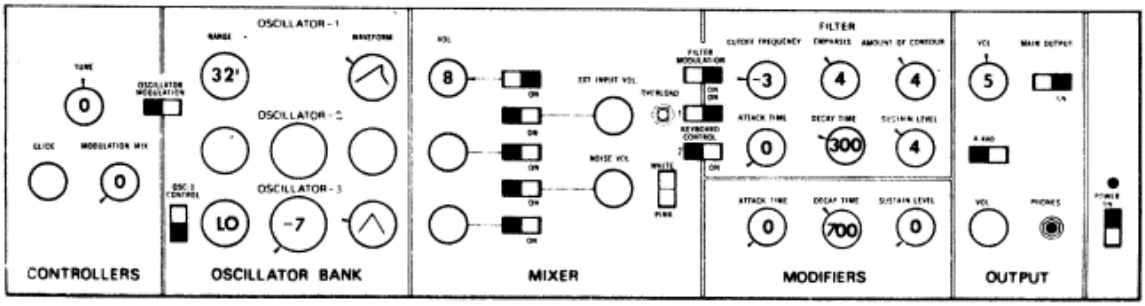

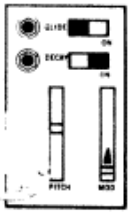

NOTES: Vary DECAY TIME control on LOUDNESS CONTOUR to create shorter tones in upper register.

SOUND: PICCOLO

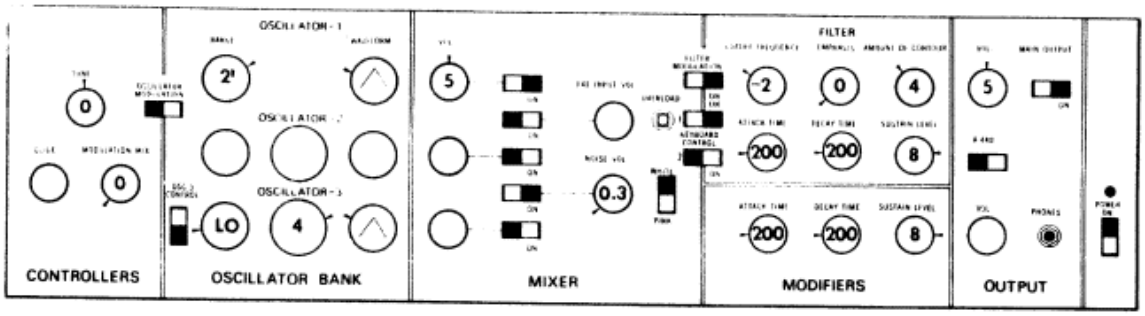

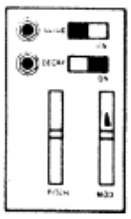

NOTES: Use modulation sparingly on sustained tones. Keep NOISE VOLUME just below edge of easy audibility.

SOUND: FLUTE

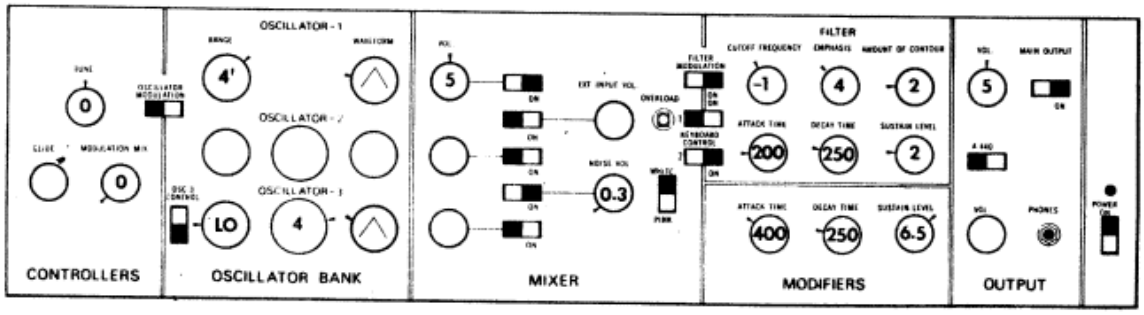

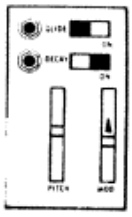

NOTES: Use heavier modulation on sustained tones. Not too much noise for air hiss sound. Play fast passage with staccato touch. Slow modulation speed for lower register.

SOUND: RECORDER FAMILY

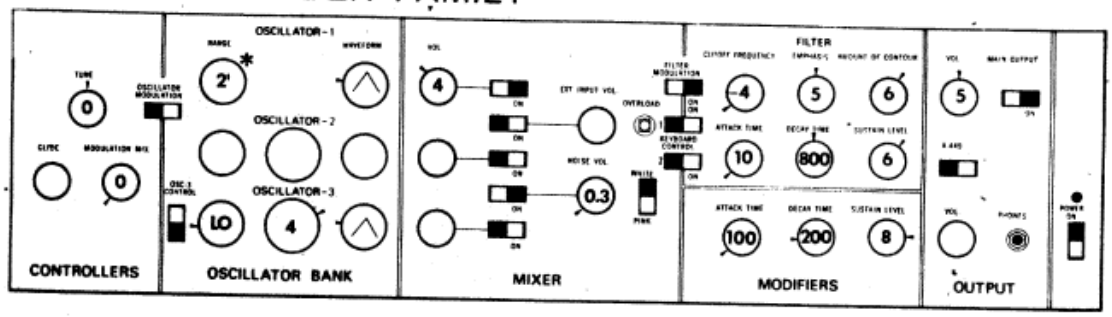

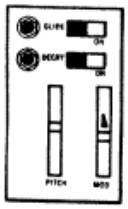

NOTES: *Two octave playing ranges from middle C on keyboard or F below.

Sopranino	2'	f-f
Soprano	4'	c-c
Alto	4'	f-f
Tenor	8'	c-c
Bass	8'	f-f

Increase LOUDNESS CONTOUR ATTACK TIME for lower instruments.

SOUND: CLARINET (BASS CLARINET)

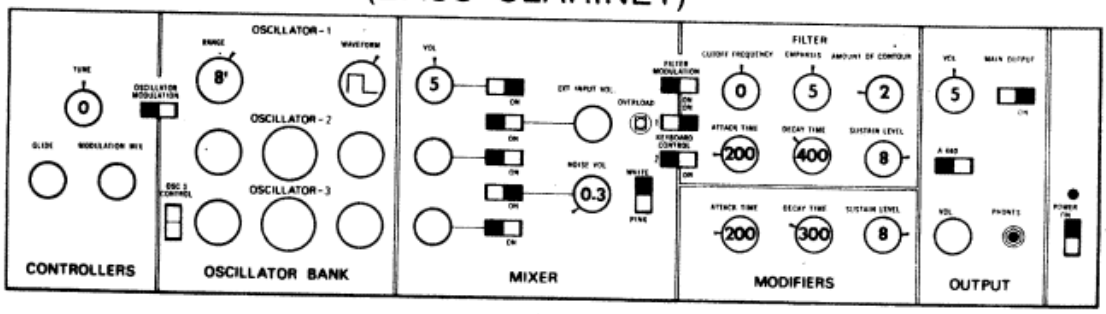

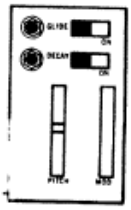

NOTES: For bass clarinet change RANGE 16' position. Place both ATTACK TIME controls at 400.

SOUND: OBOE

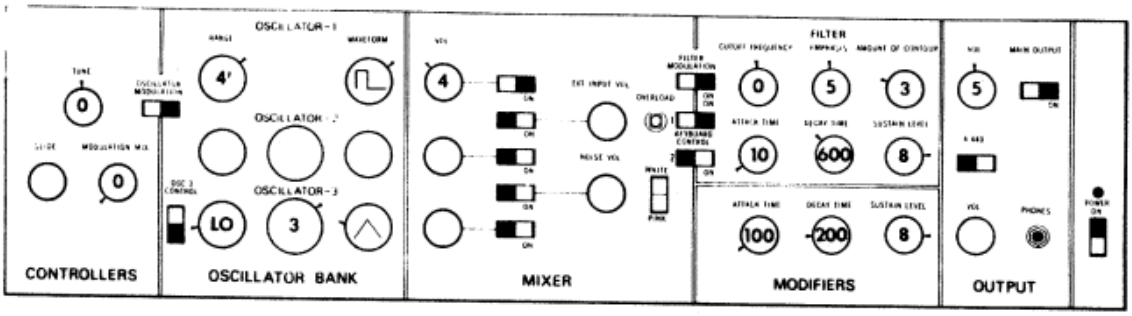

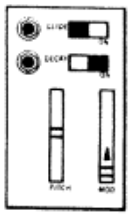

NOTES: Use small amount of modulation.

SOUND: BASSOON (ENGLISH HORN)

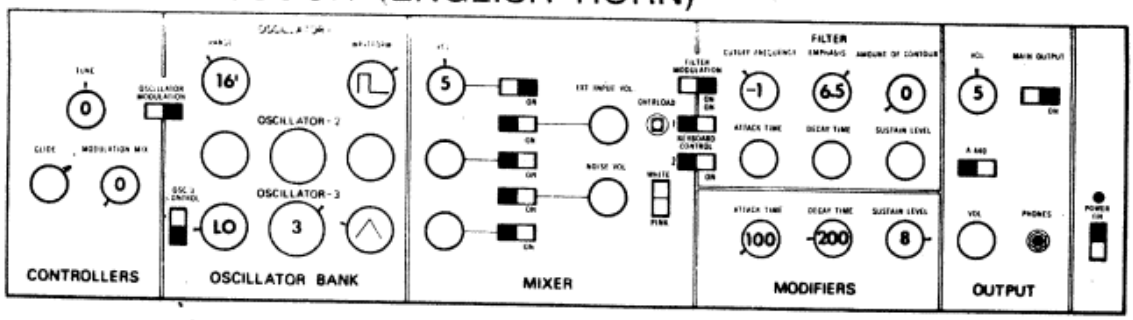

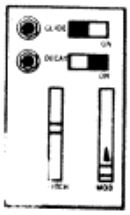

NOTES: Use small amount of modulation.

SOUND: TRUMPET

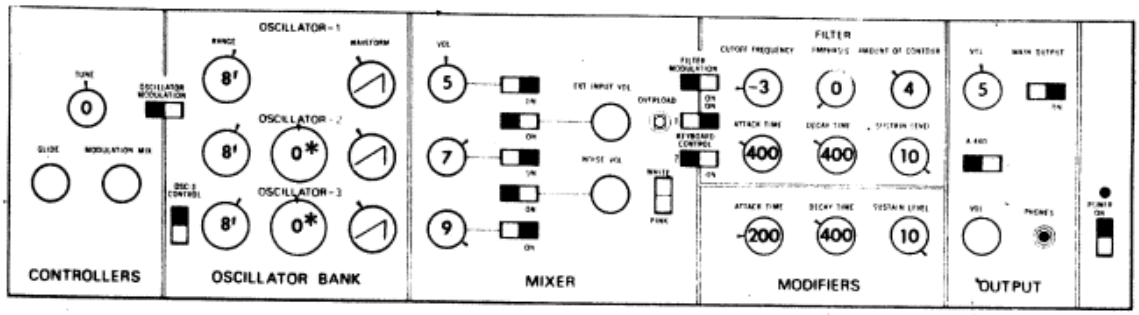

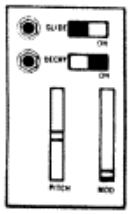

NOTES: *Oscillators tuned to unison. Add oscillators for progressively "Fatter" tutti sound.

SOUND: HORN

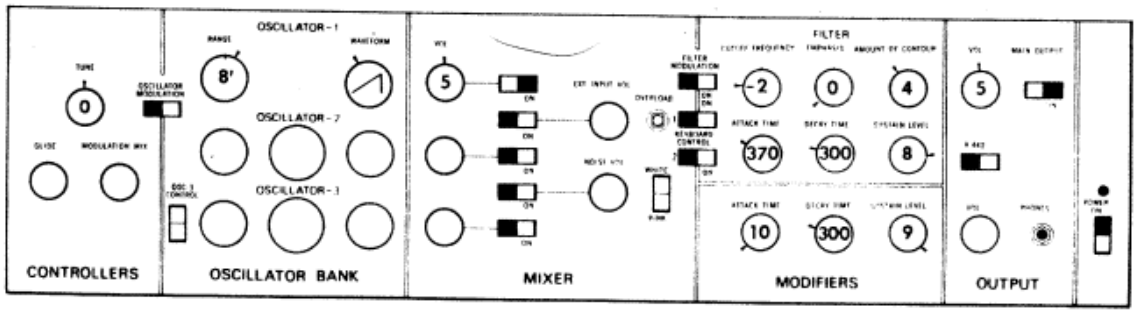

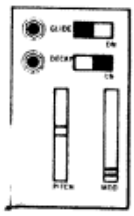

NOTES: Alter FILTER ATTACK TIME and DECAY TIME controls to suit taste.

SOUND: TROMBONE (JAZZ)

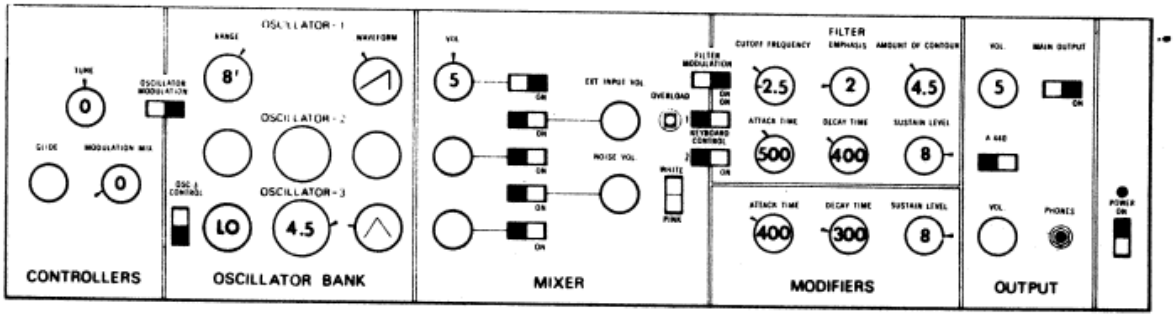

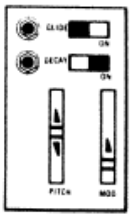

NOTES: Play in middle and upper keyboard. Use PITCH wheel for scooping pitches. Add vibrato with MODULATION wheel.

SOUND: TUBA

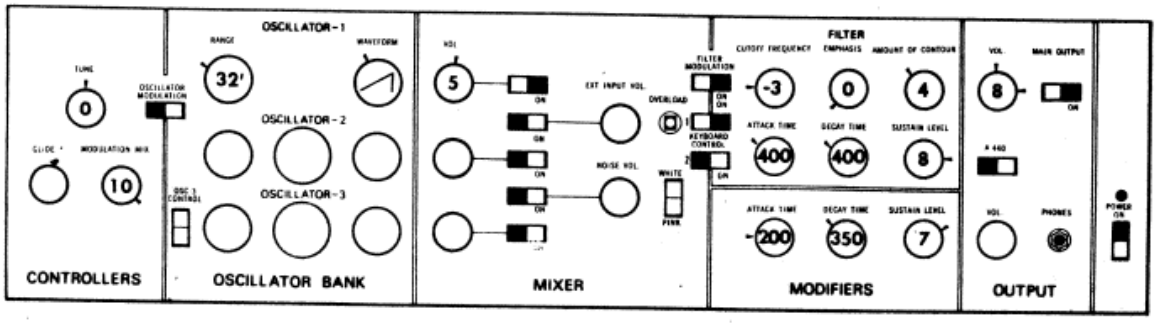

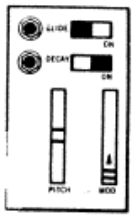

NOTES: Use small amount of modulation. Play articulated passages with staccato keyboard technique. Alter AMOUNT OF CONTOUR and CUTOFF FREQUENCY controls for brassy or muted effects.

SOUND: XYLOPHONE

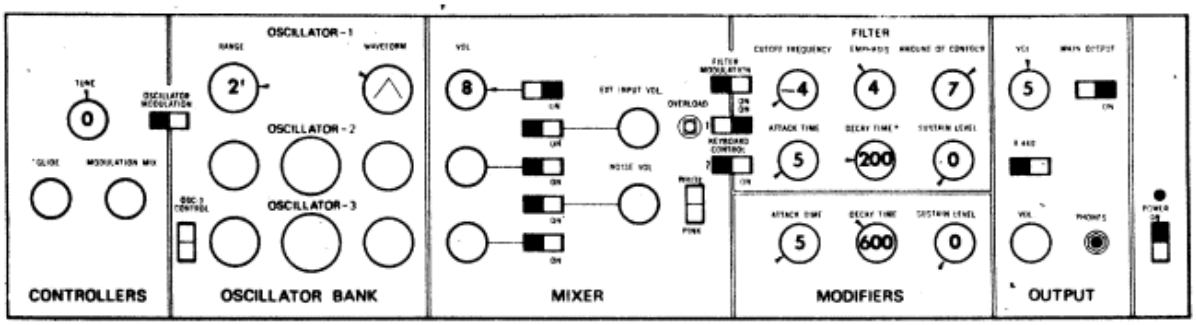

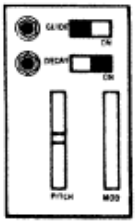

NOTES: Play in middle and upper keyboard using staccato technique.

SOUND: TEMPLE BLOCKS

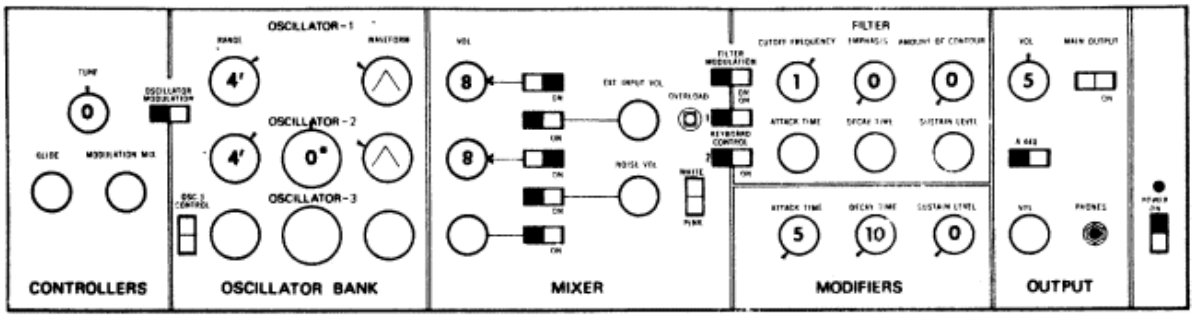

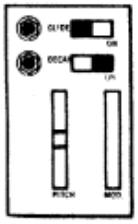

NOTES: *Detuned from unison. Detuning procedure: (1) turn SUSTAIN LEVEL control to 5; (2) detune oscillators from unison to produce rapid beating; (3) return SUSTAIN LEVEL control. Play rhythmically on black keys near middle of keyboard.

SOUND: DRUM ROLL

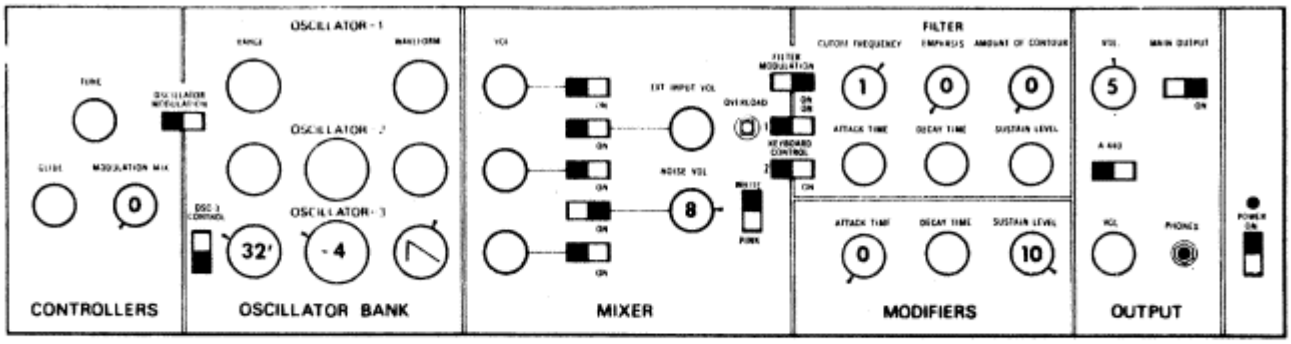

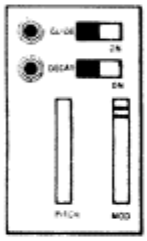

NOTES: Depress and hold any key; play rhythmically to create drum cadence.

BASS DRUM

SOUND: BASS DR

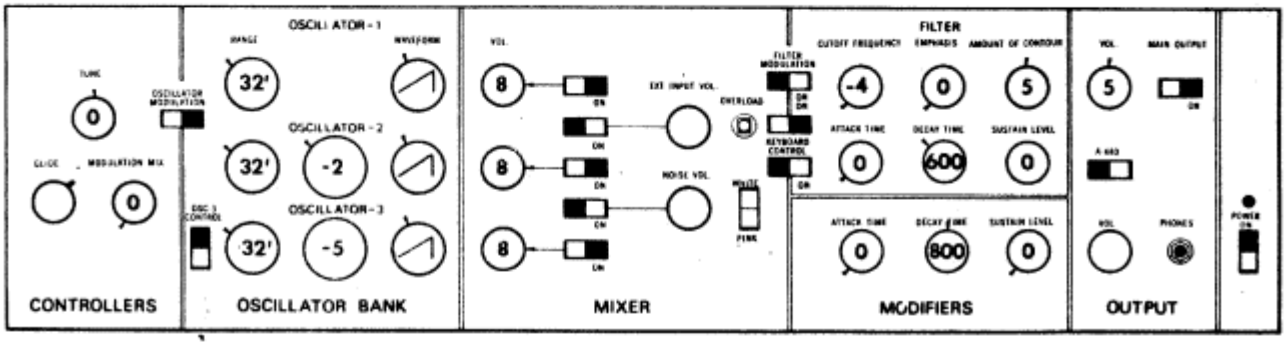

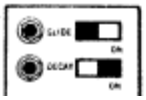

NOTES: Strike and hold a note in the lowest octave of the key-

SOUND: TINKLING BELLS

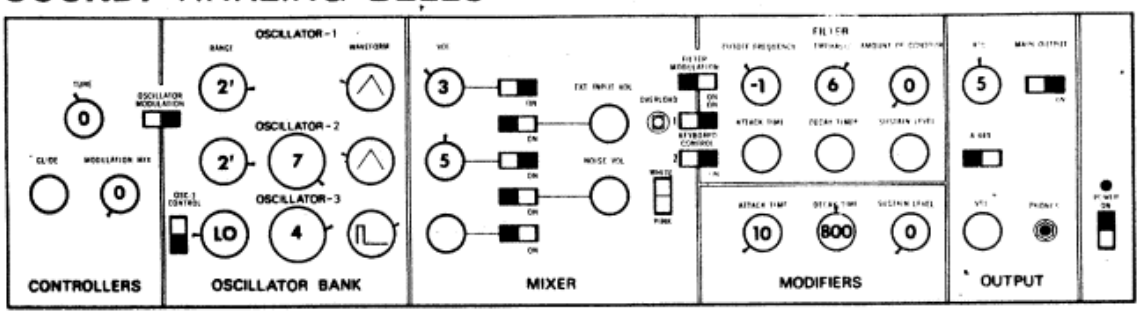

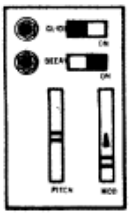

NOTES: Alter modulation amount. Strike and hold keys in low, middle, high octaves of keyboard.

SOUND: EMERSON, LAKE, AND PALMER'S Aquatarkus, from Tarkus

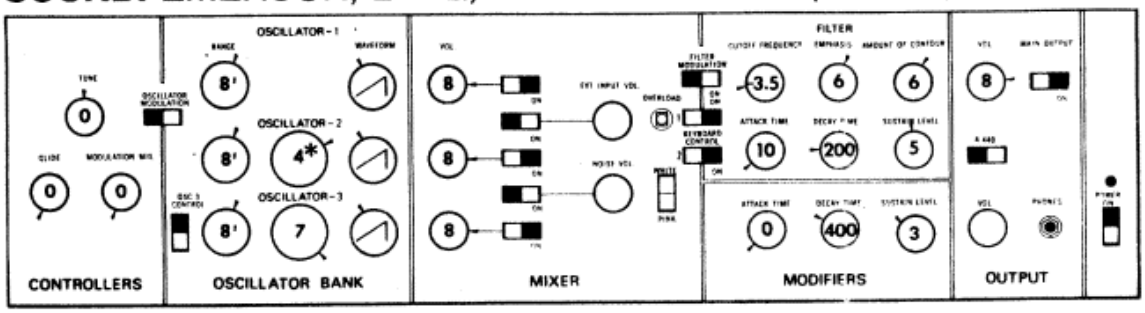

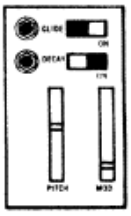

NOTES: Tune oscillators to a fourth and a fifth from the root.

SOUND: EMERSON, LAKE AND PALMER'S Trilogy

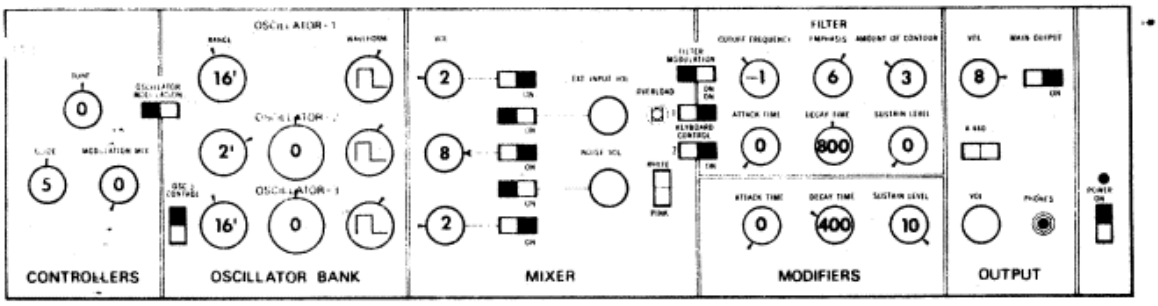

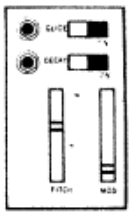

SOUND: EMERSON'S FAT BASS FROM Brain Salad Surgery

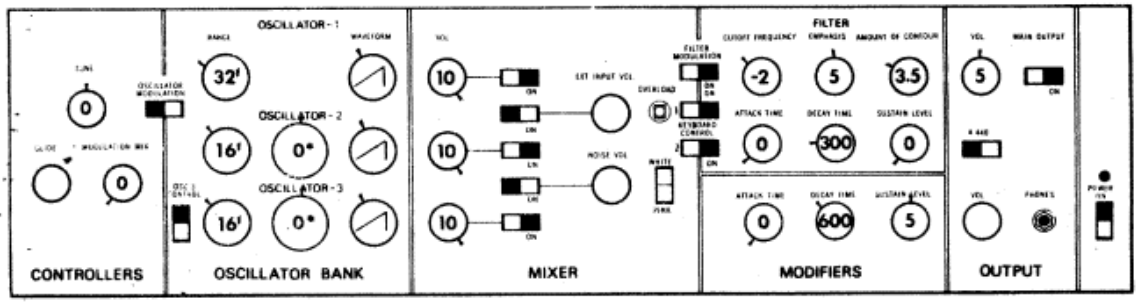

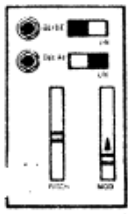

NOTES: *Oscillators tuned to unison.

SOUND: EMERSON'S STEEL DRUM FROM Brain Salad Surgery

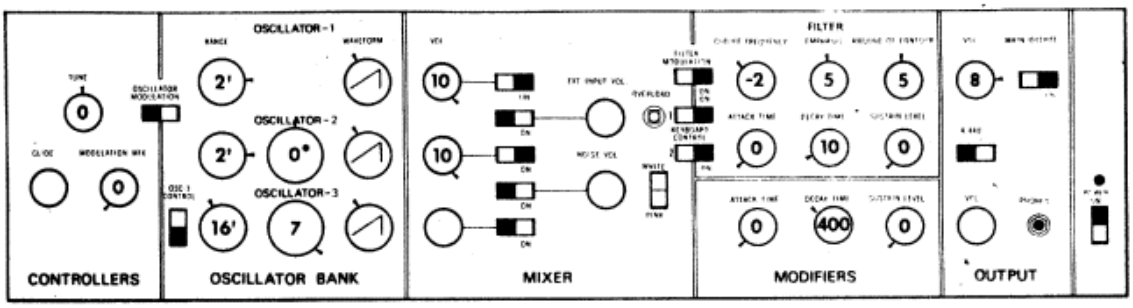

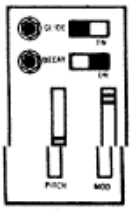

NOTES: Full modulation. *Oscillators-1 and -2 in unison. Every key will produce a different sound—find your favorites!

SOUND: RICK WAKEMAN'S Catherine of Aragon

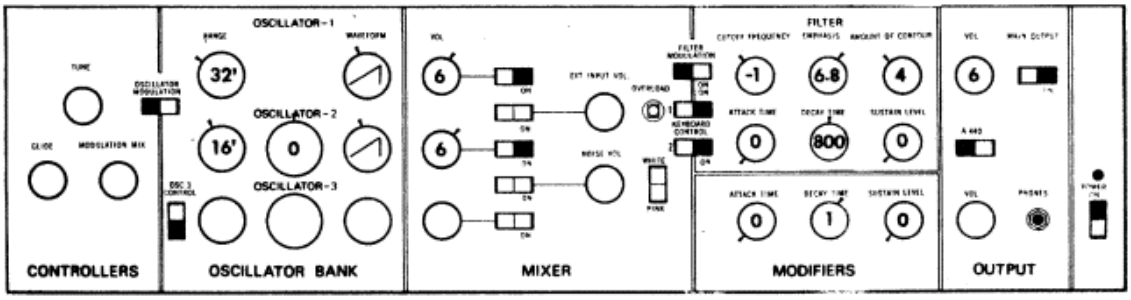

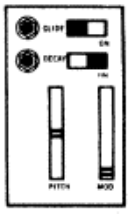

SOUND: GOOD SOUND

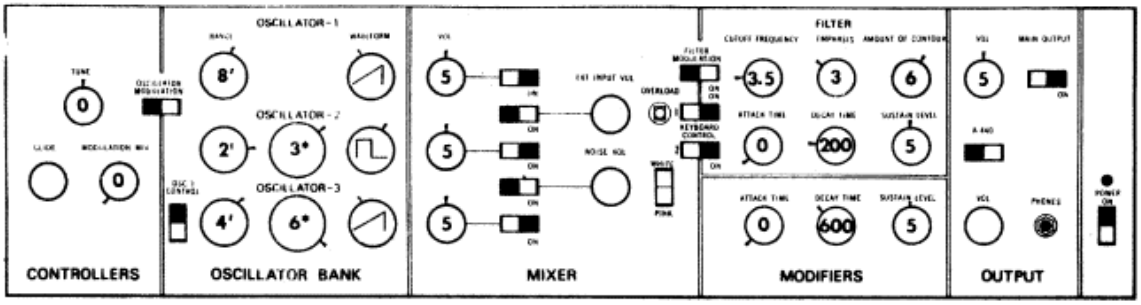

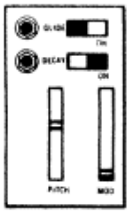

NOTES: *Tune oscillators to triad or fifths; alter RANGE settings.

SOUND: GOOM

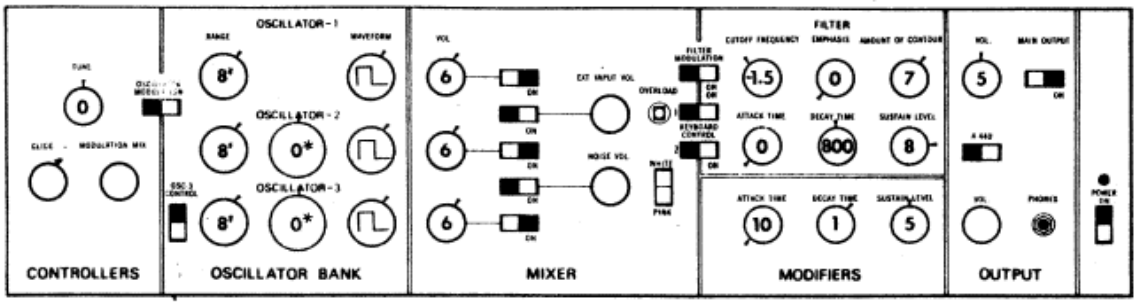

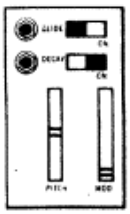

NOTES: *All OSCILLATORS in unison.

SOUND: THE MOOG T.M. SOUND

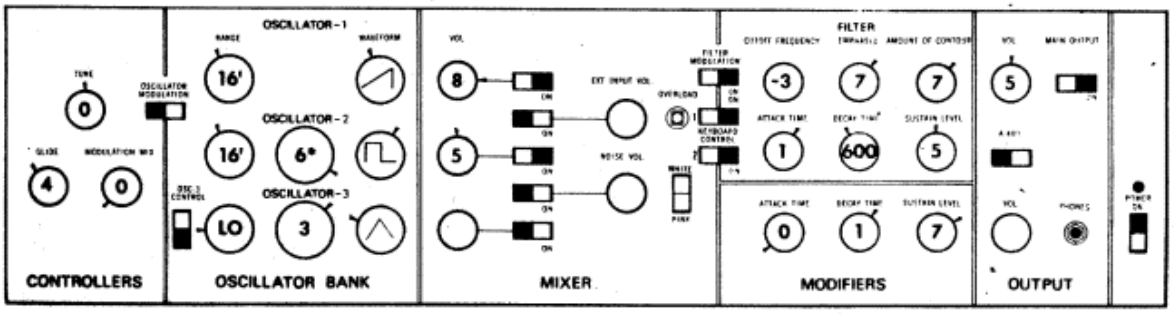

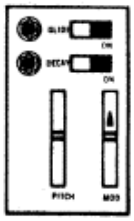

NOTES: *OSCILLATORS-1 and -2 tuned to perfect fifth.

SOUND: THE T.L.R. SOUND

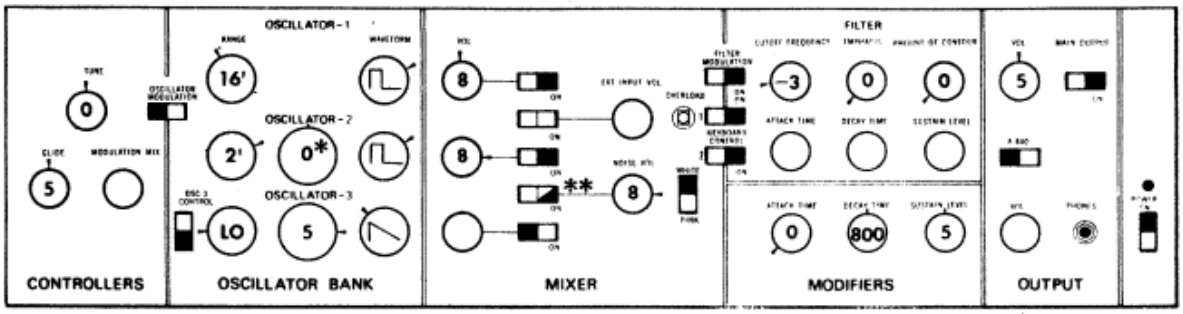

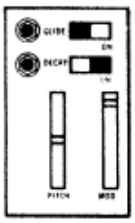

NOTES: *Oscillators in unison; octaves altered. **Alternate white noise with pitched sound. Glide optional. Play through chords rapidly—invent figures.

SOUND: MOON CHORD

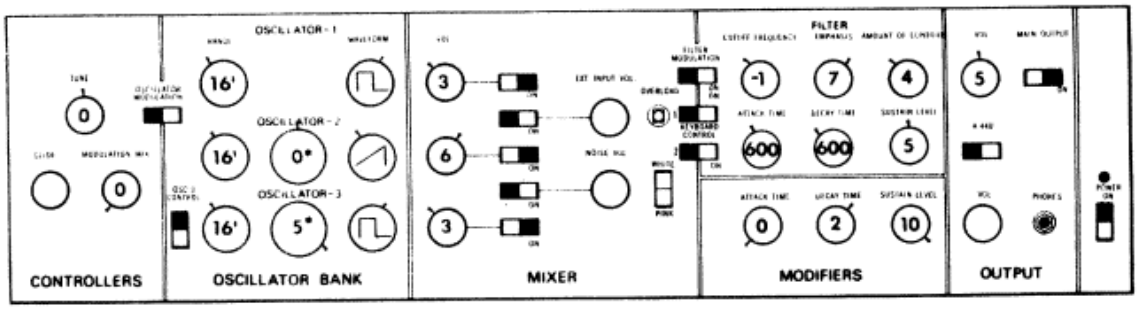

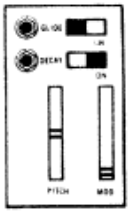

NOTES: *OSCILLATOR-2 in unison with OSCILLATOR-1, OSCILLATOR-3 tuned to an augmented fourth.

SOUND: HINDEMOOG

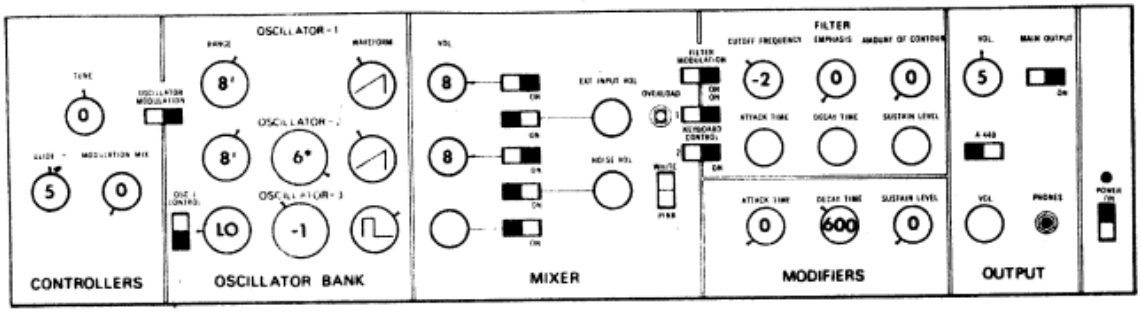

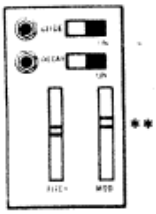

NOTES: *Oscillators tuned to perfect fifth. Second rectangular wave gives ¾ time. Glide optional.

**Set modulation wheel so that alternating interval is a perfect fifth.

SOUND: HOMMAGE A BADINGS

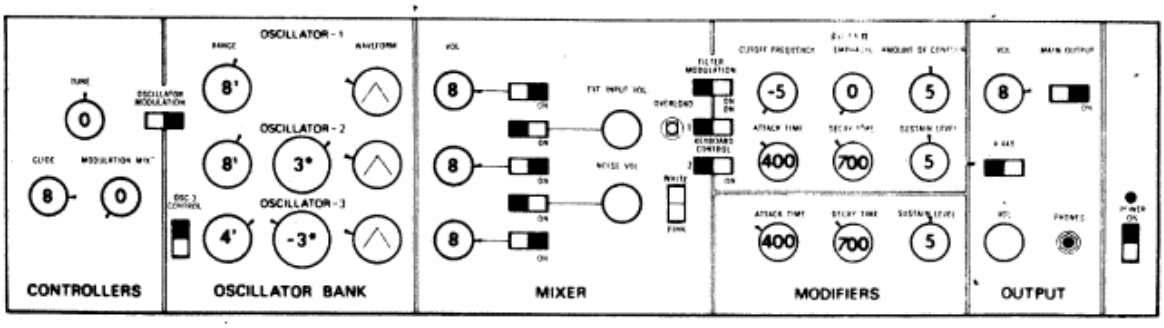

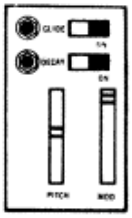

NOTES: *Oscillators tuned to augmented triad (consecutive major thirds.)

SOUND: RING MODULATOR EFFECTS

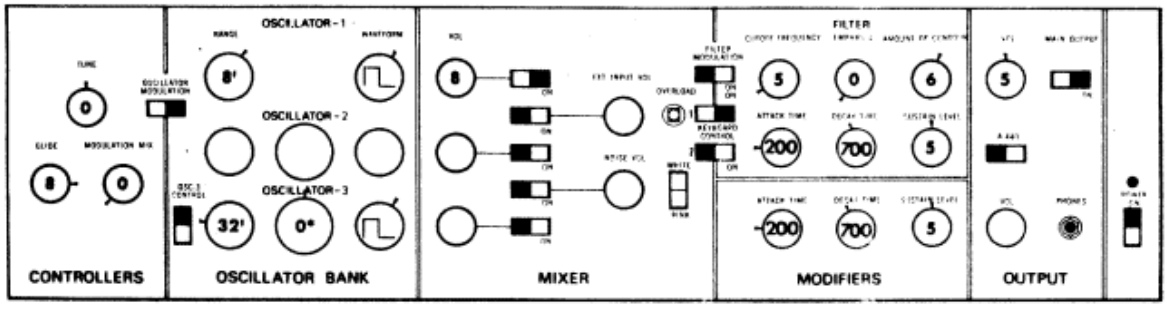

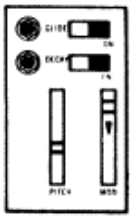

NOTES: GLIDE Optional. *Vary OSCILLATOR-3 FREQUENCY control. Vary MOD wheel.

SOUND: VREE OO BLEEP-BLEEP

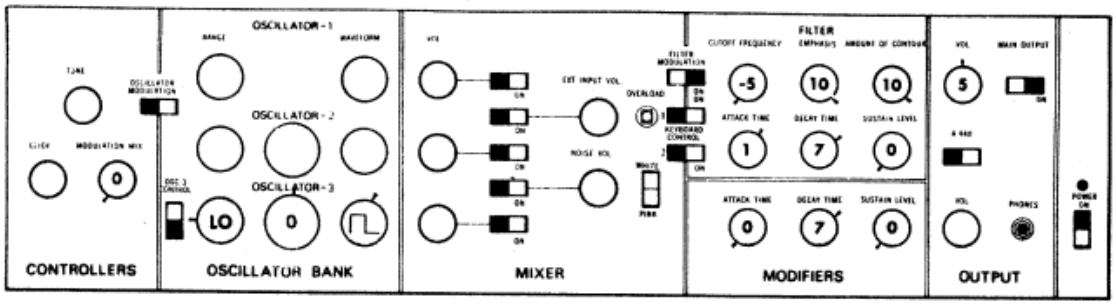

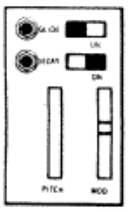

NOTES: Depress one key and hold until tone cycle is complete.

SOUND: RUNNING RHYTHM

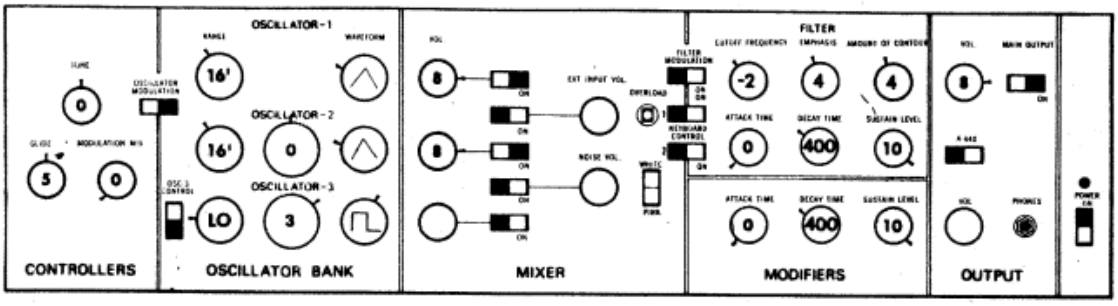

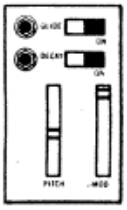

NOTES: A Rhythmic ostinato in the bass register. Glide is optional.

SOUND: NIGHT CREATURES

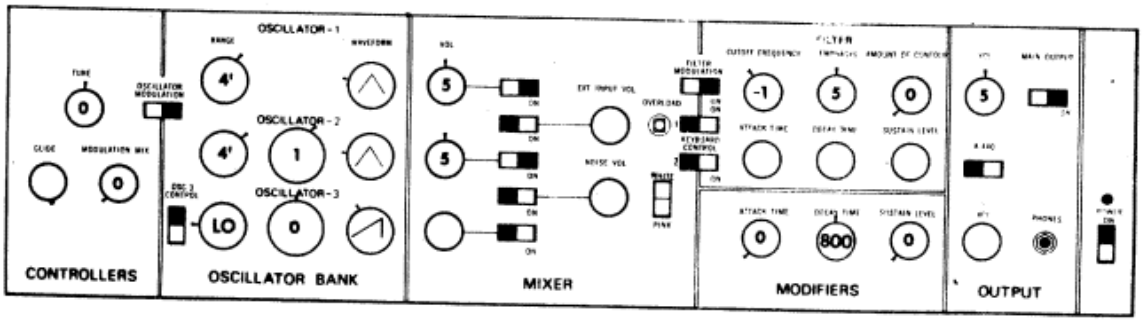

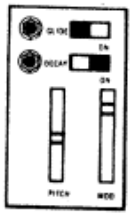

NOTES: Play various registers of keyboard.

SOUND: JET PLANE

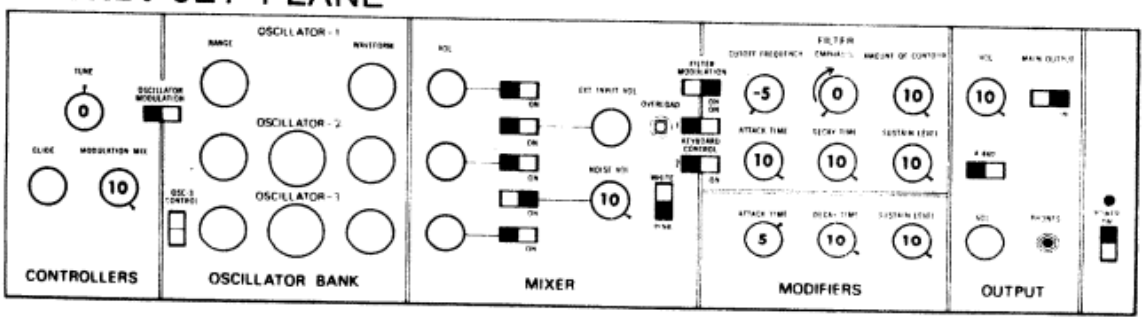

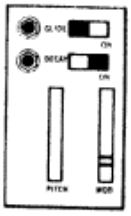

NOTES: Depress and hold any key. Release key at peak of sound and slowly rotate the EMPHASIS control to 7 and return to 0.

SOUND: SURF

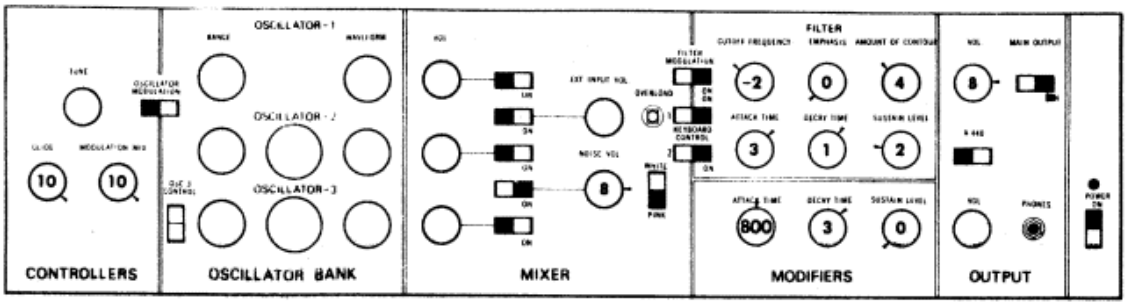

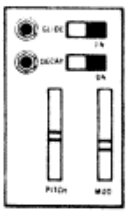

NOTES: Play lowest, then highest key and release.

SOUND: THUNDER

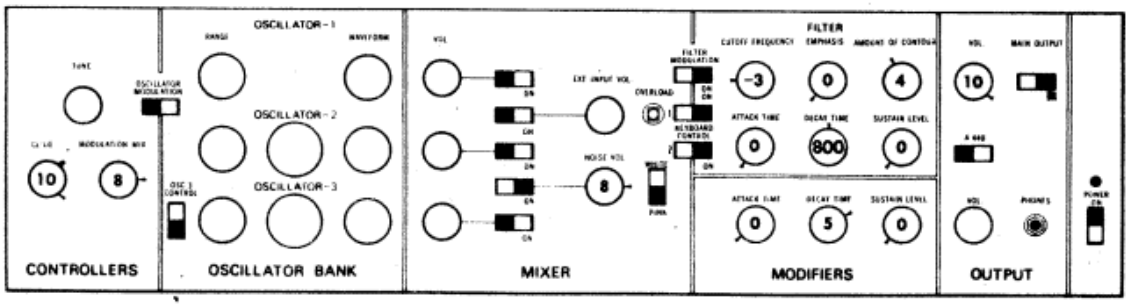

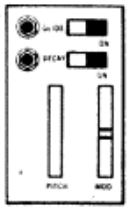

NOTES: Play an upper key rapidly followed by a lower key. Increase AMOUNT OF CONTOUR control to 5 for closer thunderclaps.

SOUND: WIND

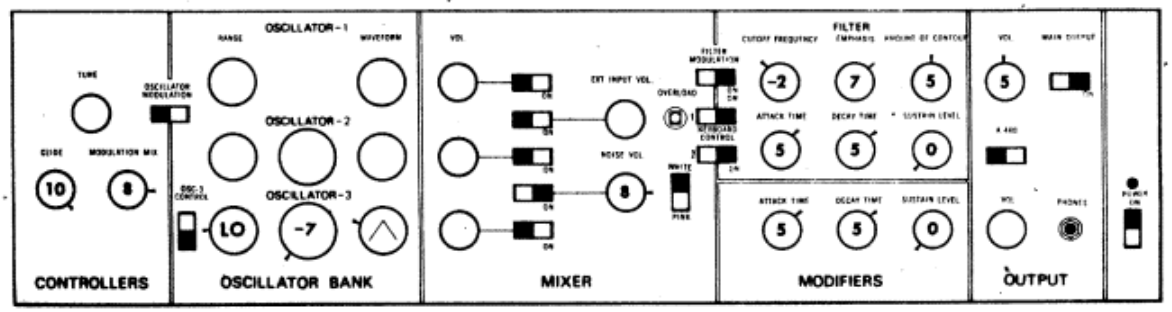

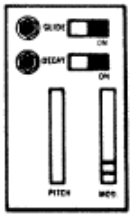

NOTES: Play keys for winds of varying intensity.

SOUND: EXPLODING BOMB

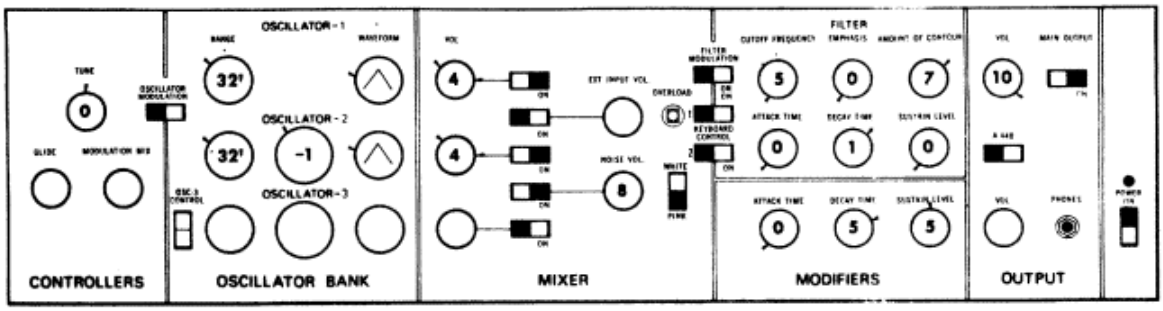

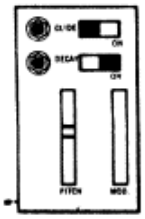

NOTES: Strike a low note.

SOUND: GASOLINE ENGINE

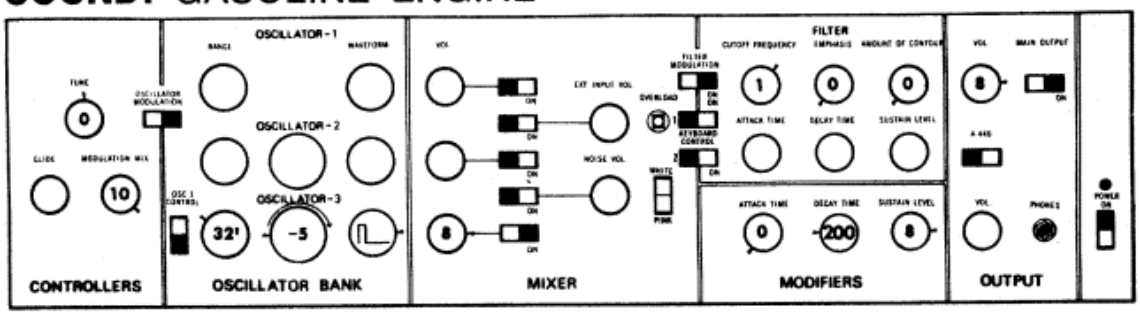

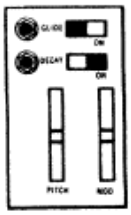

NOTES: Depress key. Change speed of engine by altering OSCILLATOR-3 FREQUENCY control.

SOUND: HEARTBEAT

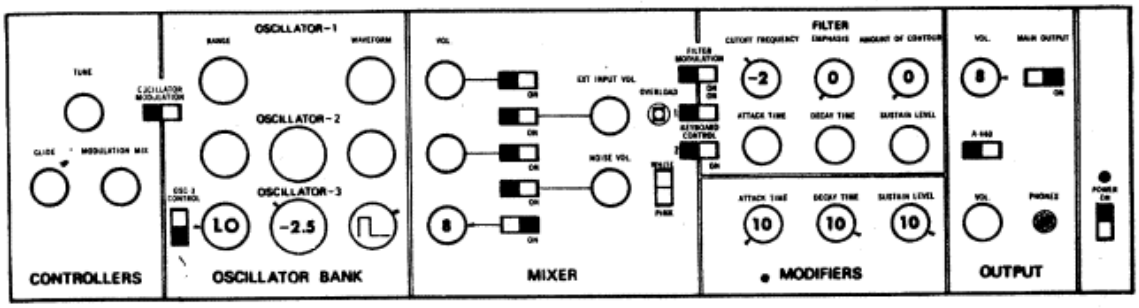

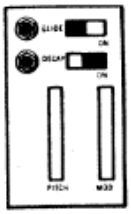

NOTES: Depress any key.

SOUND: SIREN

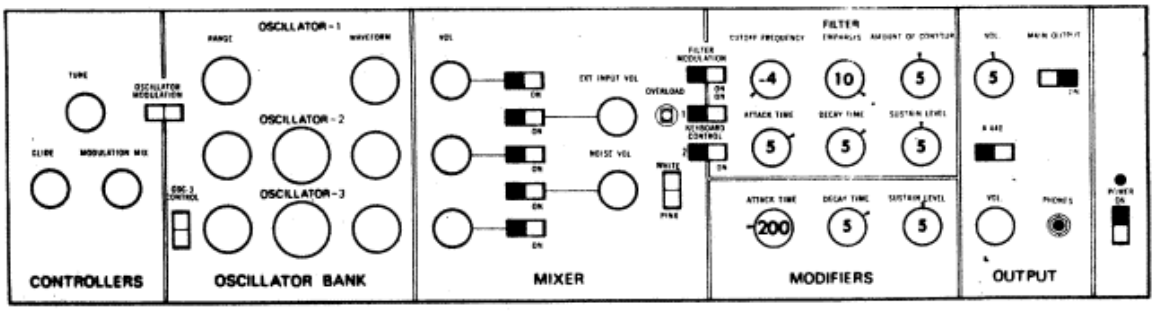

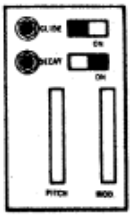

NOTES: Depress any key. The FILTER can produce a pure sine waveform. The CUTOFF FREQUENCY control establishes the pitch of this tone.

SOUND: WHISTLERS

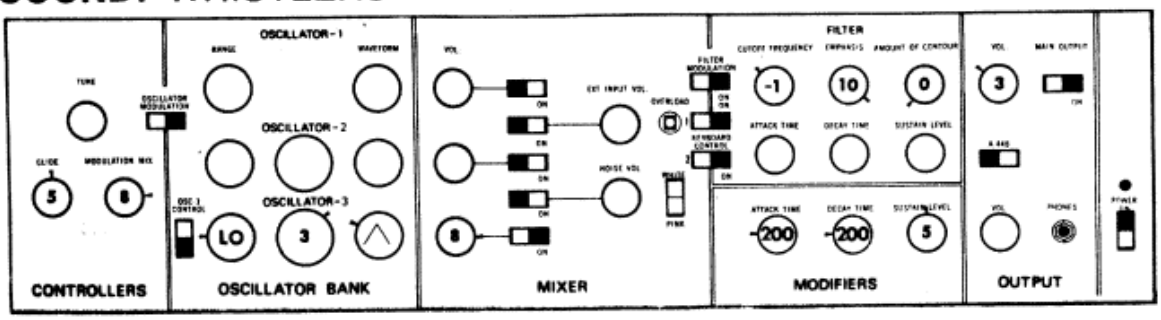

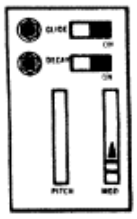

NOTES: Play the keyboard. Another use of the FILTER as a sound source.

SOUND: STEEL DRUM

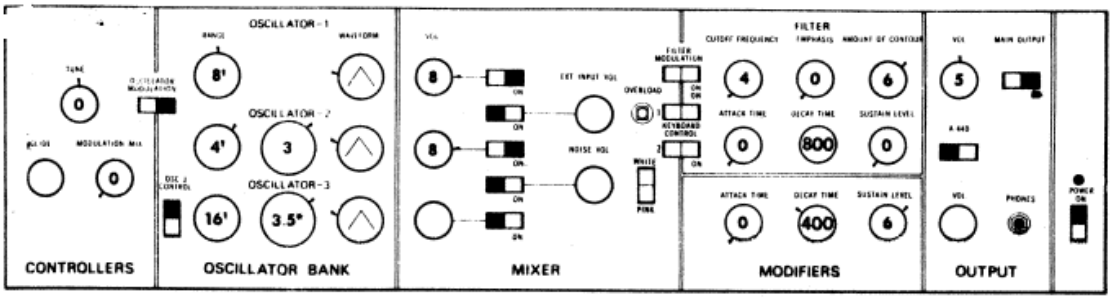

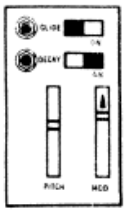

NOTES: *Vary FREQUENCY control for different sounds.

SOUND: ROUTING AN INSTRUMENT THROUGH THE MINIMOOG

Insert S-Trig Plug

Insert external signal

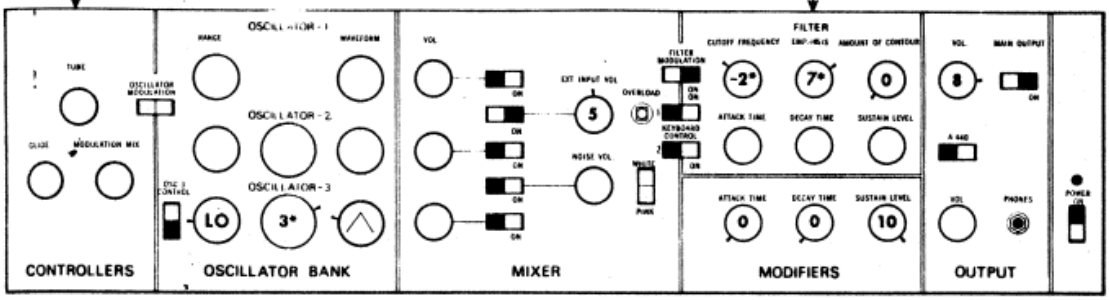

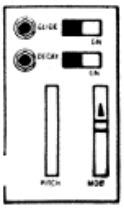

NOTES: Turn EXT. INPUT VOL. control down if OVERLOAD light stays on.
Note — if output is weak, increase gain of amplifiers.

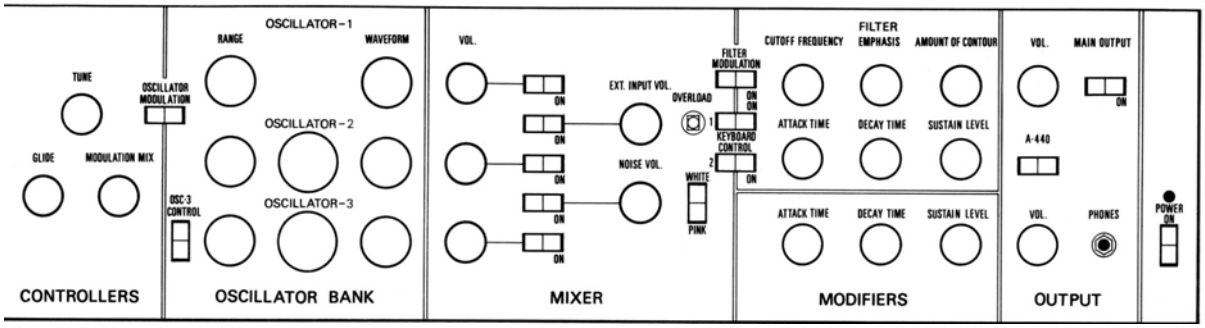
OSCILLATOR-1
RANGE
WAVEFORM
TUNE
OSCILLATOR MODULATION
OSCILLATOR-2
GLIDE
MODULATION MIX
OSC-3 CONTROL
OSCILLATOR-3
CONTROLLERS
OSCILLATOR BANK
VOL.
ON
EXT. INPUT VOL.
OVERLOAD
NOISE VOL.
WHITE
PINK
FILTER MODULATION
KEYBOARD CONTROL
MIXER
FILTER
CUTOFF FREQUENCY
EMPHASIS
AMOUNT OF CONTOUR
ATTACK TIME
DECAY TIME
SUSTAIN LEVEL
MODIFIERS
MAIN OUTPUT
A-440
PHONES
OUTPUT
POWER ON

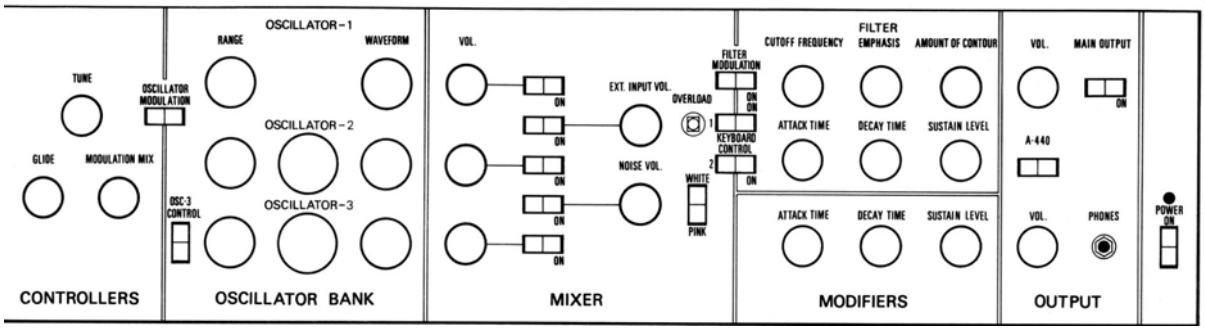
OSCILLATOR-1
RANGE
WAVEFORM
TUNE
OSCILLATOR MODULATION
OSCILLATOR-2
GLIDE
MODULATION MIX
OSC-3 CONTROL
OSCILLATOR-3
CONTROLLERS
OSCILLATOR BANK
VOL.
ON
EXT. INPUT VOL.
OVERLOAD
NOISE VOL.
WHITE
PINK
FILTER MODULATION
KEYBOARD CONTROL
MIXER
FILTER
CUTOFF FREQUENCY
EMPHASIS
AMOUNT OF CONTOUR
ATTACK TIME
DECAY TIME
SUSTAIN LEVEL
MODIFIERS
MAIN OUTPUT
A-440
PHONES
OUTPUT
POWER ON

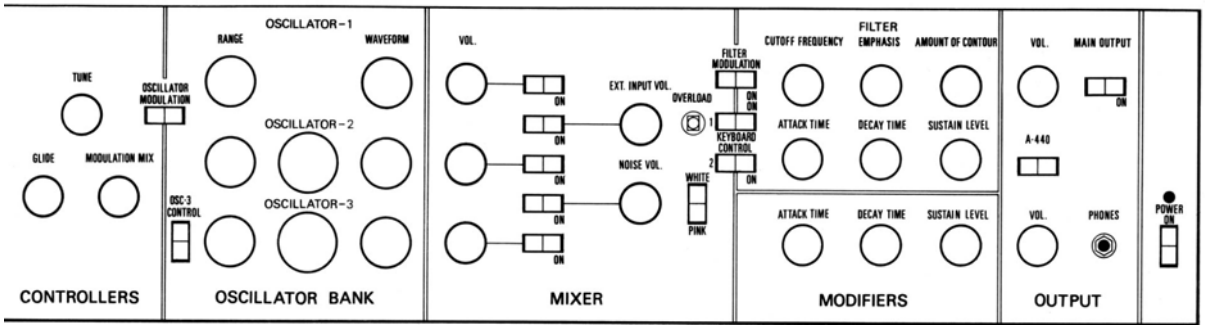
OSCILLATOR-1
RANGE
WAVEFORM
TUNE
OSCILLATOR MODULATION
OSCILLATOR-2
GLIDE
MODULATION MIX
OSC-3 CONTROL
OSCILLATOR-3
CONTROLLERS
OSCILLATOR BANK
VOL.
ON
EXT. INPUT VOL.
OVERLOAD
NOISE VOL.
WHITE
PINK
FILTER MODULATION
KEYBOARD CONTROL
MIXER
FILTER
CUTOFF FREQUENCY
EMPHASIS
AMOUNT OF CONTOUR
ATTACK TIME
DECAY TIME
SUSTAIN LEVEL
MODIFIERS
MAIN OUTPUT
A-440
PHONES
OUTPUT
POWER ON