UMS-1P : Ultra-Compact Subwoofer



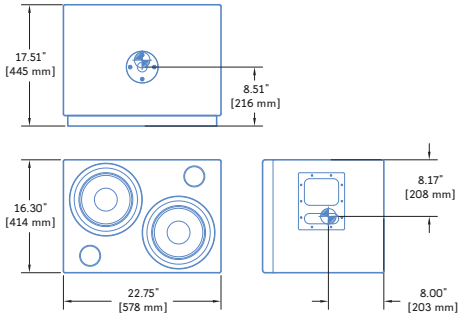

Dimensions	22.75" w x 16.30" h x 17.51" d (16" without grille) (578 mm x 414 mm x 445 mm; 406 mm without grille)
Weight	62 lbs (28.10 kg)
Enclosure	Premium birch plywood
Finish	Black textured (other options available)
Protective Grille	Powder-coated hex-stamped steel, foam covering

An extremely compact, self-powered system, the UMS-1P ultra-compact subwoofer provides powerful low-frequency extension in applications where both excellent audio quality and an unobtrusive cabinet size are required. The system's output is 127 dB peak SPL within its operating range of 25 Hz to 160 Hz. Although designed primarily as a companion for Meyer Sound's UPM-1P wide coverage and UPM-2P narrow coverage ultra-compact loudspeakers, the UMS-1P is equally adaptable for use with other Meyer Sound models such as the HD-1 high-definition studio monitor. The UMS-1P may be used singly or stacked to provide even greater low-frequency output.

The tuned bass-reflex enclosure houses two 10-inch cone drivers, each powered by a dedicated channel of an integral class AB/bridged power amplifier with complementary MOSFET output stages. Total peak power is 450 watts. Each channel incorporates a limiter that prevents driver over-excursion and regulates the voice coil temperature. A smooth limiting characteristic effectively protects the drivers without the compression effects imposed by typical limiters, allowing high output levels across the drivers' entire frequency range.

The internal electronics also provide active signal processing, including phase correction circuitry that delivers flat frequency and phase response over the entire operating range. Integrating a built-in low-pass crossover while accepting a full-range signal, the UMS-1P's input allows for simple daisy-chain signal distribution and eliminates the need for external crossovers.

Field-replaceable audio input modules accommodate a range of applications. The standard version offers looping XLR input and output connectors, while an enhanced looping version adds polarity switching (the looping output is not affected) and input attenuation (0 dB to -18 dB). A summing mono version with two inputs is also available.

The standard UMS-1P is switchable between the 115 V AC and 230 V AC ranges. A 100 V AC version is also available. The integral power supply suppresses high-voltage transients and also provides EMI filtering. Dual locking PowerCon connectors facilitate AC looping.

The UMS-1P's durable enclosure is constructed from premium birch plywood and is covered with a black textured hard-shell finish. A hex-stamped steel grille and a charcoal grey foam cover are included. A pole mount for supporting a UPM-1P or UPM-2P is fitted as standard. Options include custom color finishes, and cabinets with no handles for fixed applications requiring specific cosmetics.

The UMS-1P is compatible with the RMS™ remote monitoring system, which offers comprehensive monitoring of system parameters on a Windows®-based network.

FEATURES & BENEFITS

- Powerful, extended low-frequency response in a very compact cabinet
- Linear driver excursion ensures exceptionally clean bass response with very low distortion
- Adaptable to complement the UPM and HD-1 systems
- Flat, phase-corrected response ensures maximum fidelity

APPLICATIONS

- Mix suites
- Small theatre and audio-visual
- Houses of worship

UMS-1P SPECIFICATIONS

ACOUSTICAL	
Operating Frequency Range[1]	25 Hz – 160 Hz
Frequency Response[2]	29 Hz – 135 Hz ±4 dB
Phase Response	41 Hz – 155 Hz ±30˚
Maximum Peak SPL[3]	127 dB
Dynamic Range	›110 dB
COVERAGE	
	360˚ single unit; varies for multiple units, depending on number and configuration
TRANSDUCERS	
Low Frequency	Two 10" cone drivers Nominal impedance: 4 Ω Voice coil size: 2" Power-handling capability: 400 W[4]
AUDIO INPUT	
Type	Differential, electronically balanced
Maximum Common Mode Range	±15 V DC, clamped to earth for voltage transient protection
Connectors	Female XLR input with male XLR loop output
Input Impedance	10 kΩ differential between pin 2 & 3
Wiring	Pin 1: Chassis/earth through 220 kΩ, 1000 pF, 15 V clamp network to provide virtual ground lift at audio frequencies Pin 2: Signal + Pin 3: Signal – (optional polarity reversal switch)[5] Case: Earth ground and chassis
DC Blocking	Differential DC blocking up to max common mode voltage
CMRR	›50 dB, Typically 80 dB (50 Hz – 500 Hz)
RF Filter	Common Mode: 425 kHz; Differential Mode: 142 kHz
TIM Filter	‹80 kHz, integral to signal processing
Nominal Input Sensitivity	0 dBV (1 V rms, 1.4 V pk) continuous is typically the onset of limiting for pink noise and music
Input Level	Audio source must be capable of producing a minimum of +20 dBV (10 V rms, 14 V pk) into 600 Ω in order to produce maximum peak SPL over the operating bandwidth of the loudspeaker
AMPLIFIER	
Type	Two-channel complementary MOSFET output stages (class AB/bridged)
Output Power[6]	450 W total
THD, IM, TIM	‹.02 %
Load Capacity	4 Ω both channels
Cooling	Convection
AC POWER	
Connector	PowerCon with looping output
Voltage Selection	External 115/230 V AC switch (100 V AC version available)[7]
Operating Voltage Ranges	105 V AC – 130 V AC (115 V AC); 210 V AC – 260 V AC (230 V AC)[8]
Current Draw[9]:	
Idle Current	.0.13 A rms (115 V AC); 0.065 A rms (230 V AC); 0.15 A rms (100 V AC)
Max Long-Term Continuous Current (›10 sec)	1 A rms (115 V AC); 0.5 A rms (230 V AC); 1.2 A rms (100 V AC)
Burst Current (‹1 sec)	1.3 A rms (115 V AC); 0.65 A rms (230 V AC); 1.5 A rms (100 V AC)
Ultimate Short-Term Peak Current Draw	2.9 A pk (115 V AC); 2 A pk (230 V AC); 3.3 A pk (100 V AC)
Inrush Current	18 A pk (115 V AC); 12 A pk (230 V AC); 15 A pk (100 V AC)
RMS NETWORK (OPTIONAL)	
	Equipped for two-conductor, twisted-pair network, reporting amplifier operating parameters to system operator's host computer.

NOTES:

1. *Recommended maximum operating frequency range. Response depends on loading conditions and room acoustics.*
2. *Free field, measured with 1/3-octave frequency resolution at 4 meters.*
3. *Measured with music at 1 meter.*
4. *Power handling is measured under AES standard conditions: transducer driven continuously for two hours with band-limited noise signal having a 6 dB peak-average ratio.*
5. *Two additional input module options are available with a polarity reversal switch and an attenuator (0 dB to –18 dB): one looping and one with two inputs for mono summing.*
6. *Amplifier wattage rating based on the maximum unclipped burst sine-wave rms voltage the amplifier will produce into the nominal load impedance. Each channel 30 V rms (42 V pk) into 4 ohms.*
7. *100 V AC version, range 90 – 100 V AC; recommended maximum 115 V AC.*
8. *Fuse-protected above 135 V AC (115 V AC switch position) and 265 V AC (230 V AC switch position).*
9. *Current drawing for a single loudspeaker. Loop out not used.*

Made by Meyer Sound Laboratories
Berkeley, California USA
European Office:
Meyer Sound Lab. GmbH
Carl Zeiss Strasse 13
56751 Polch, Germany

N775

3K59 COMMERCIAL AUDIO SYSTEM
US LISTED

UMS-1P – 04.086.010.01 B

Copyright © 2005
Meyer Sound Laboratories Inc.
All rights reserved

MEYER SOUND LABORATORIES INC.
2832 San Pablo Avenue
Berkeley, CA 94702

T: +1 510 486.1166
F: +1 510 486.8356

techsupport@meyersound.com
www.meyersound.com

ARCHITECT SPECIFICATIONS

The loudspeaker shall be a self-powered, sub-bass system able to be used singly or ground-stacked in multiples. The transducers shall consist of two 10-inch cone drivers with 2-inch voice coils, each rated to handle 400 AES* watts.

The loudspeaker shall incorporate internal processing electronics and a two-channel amplifier. Each amplifier channel shall be class AB/bridged with complementary MOSFET output stages. Burst capability shall be 450 watts total with a nominal resistive load of 4 ohms both channels. Distortion (THD, IM, TIM) shall not exceed 0.02%.

Performance specifications for a typical production unit shall be as follows: Operating frequency range shall be 25 Hz to 160 Hz. Phase response shall be ±30 degrees from 41 Hz to 155 Hz. Maximum peak SPL shall be 127 dB at 1 meter. Beamwidth shall be 360 degrees for a single unit. Directional characteristics can be achieved with multiple cabinets.

The audio input shall be electronically balanced with a 10 kOhm impedance and accept a nominal 0 dBV (1 V rms, 1.4 V pk) signal (+20 dBV to produce maximum peak SPL). Connectors shall be XLR (A-3) type male and female. RF filtering shall be provided. CMRR shall be greater than 50 dB (typically 80 dB, 50 Hz to 500 Hz). Two additional input module options shall be offered with an attenuator and polarity reversal switch; one with loop-through output, and another with two summing inputs instead of the loop-through input and output.

Two versions of the loudspeaker shall be available: a switchable 115/230 V and a non-switchable 100 V version. The voltage selection needs to be manually selected. The internal power supply shall perform EMI filtering, soft current turn-on and surge suppression. Powering requirements shall be nominal 100 (100 V version) and 110 or 230 V AC (115/230 version) line current at 50 or 60 Hz. UL and CE operating voltage range shall be 115 V AC – 240 V AC. Ultimate short-term peak current draw shall be 2.9 A at 115 V AC, 2 A at 230 V AC and 3.3 A at 100 V AC. Current inrush during turn-on shall not exceed 18 A at 115 V AC. AC power connectors shall be PowerCon with looping output. The loudspeaker system shall provide facilities for installing the optional RMS remote monitoring system.

All loudspeaker components shall be mounted in an acoustically vented rectangular enclosure constructed of premium birch plywood with a black textured finish. The front protective grille shall be powder-coated hex-stamped steel covered by charcoal-gray foam. Dimensions shall be 22.75" wide x 16.30" high x 17.51" deep (16" without grille) (578 mm x 414 mm x 445 mm; 406 mm without grille). Weight shall be 62 lbs (28.10 kg). A pole mount for supporting a UPM-1P or UPM-2P shall be fitted as standard.

The loudspeaker shall be the Meyer Sound UMS-1P.

*Driven continuously for two hours with band-limited noise signal having a 6 dB peak-average ratio.