For more Hi-Fi manuals and set-up information
please visit www.hifiengine.com



marantz

model 1152DC

Stereo Console Amplifier

marantz

TABLE OF CONTENTS

SECTION	PAGE
1. POWER AMPLIFIER ADJUSTMENT	**1**
2. TEST EQUIPMENT REQUIRED FOR SERVICING	**2**
3. VOLTAGE CONVERSION FOR EUROPE	**3**
4. MAJOR COMPONENT LOCATIONS	**4**
4.1 Front Panel Adjustment and Component Locations	4
4.2 Main Chassis Component Locations (Top View)	4
4.3 Rear Panel Adjustment and Component Locations	5
4.4 Main Chassis Component Locations (Bottom View)	5
5. DIAGRAM AND COMPONENT LOCATIONS	**6**
5.1 Filter Amp. Assembly (PH01) Schematic Diagram and Component Locations	6
5.2 Pre- Amp. Assembly (PJ01) Schematic Diagram and Component Locations	7
5.3 Speaker Switch Assembly (PW00) Schematic Diagram and Component Locations	10
5.4 Front Panel Assembly (PS00) Schematic Diagram and Component Location	11
5.5 Main Amp. Assembly (P700) Schematic Diagram and Component Locations	15
5.6 Relay Assembly (PN00) Schematic Diagram and Component Locations	18
5.7 Rear Panel Assembly (PV00) Schematic Diagram and Component Locations	19
6. BLOCK DIAGRAM	**20**
7. CONNECTION DIAGRAM	**21**
8. SCHEMATIC DIAGRAM	**23**
9. EXPLODED MECHANICAL DIAGRAM	**25**
9.1 Cabinet	25
9.2 Chassis	27
9.3 Rear Panel for U.S.A. & Canadian Models	29
9.4 Rear Panel for European Model	29
10. PACKING MATERIAL EXPLODED VIEW	**30**
11. PARTS LIST	**31**
12. TECHNICAL SPECIFICATIONS	**40**

1. POWER AMPLIFIER ADJUSTMENT

1.1 DC-OFFSET ADJUSTMENT

Connect VTVM to JN01 and JN05 (or ground) and adjust left channel R739 until the meter indication reaches 0mV (±5mV). Similarly, connect VTVM to JN04 and JN06 (or ground) and adjust right channel R740 until the meter indication reaches 0mV (±5mV).

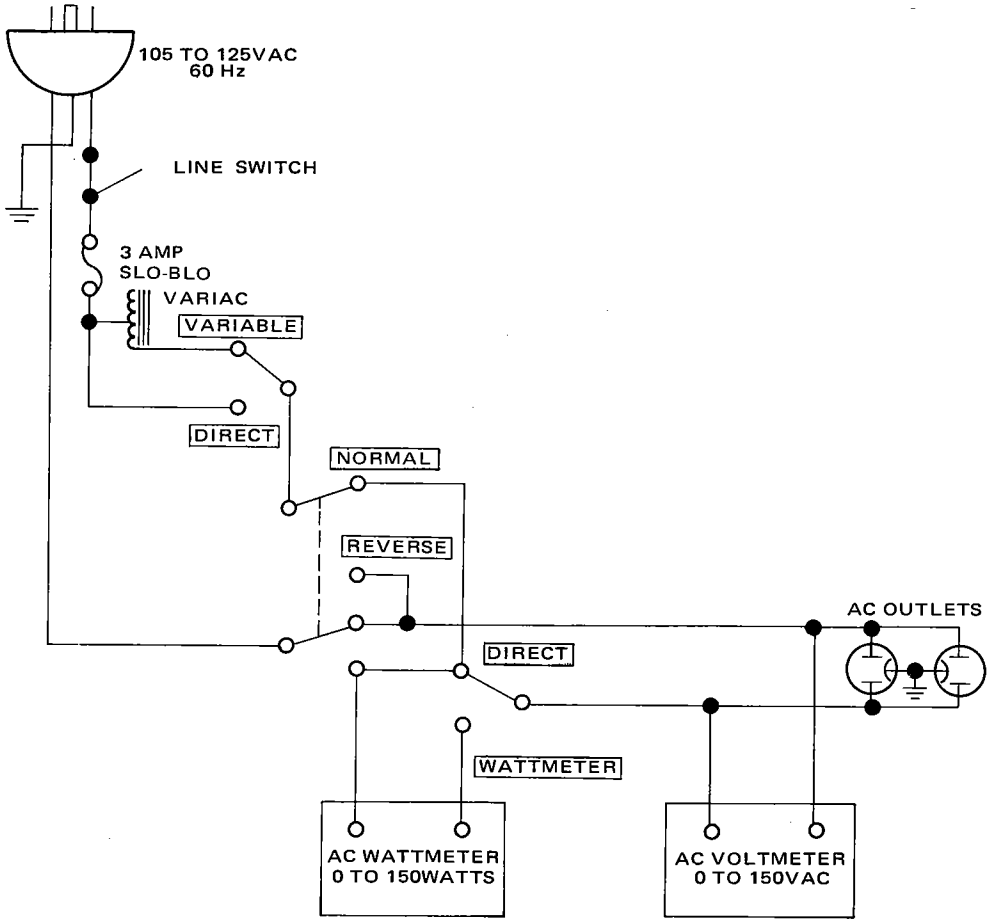

Figure 1. AC Power Control Box Simplified Schematic

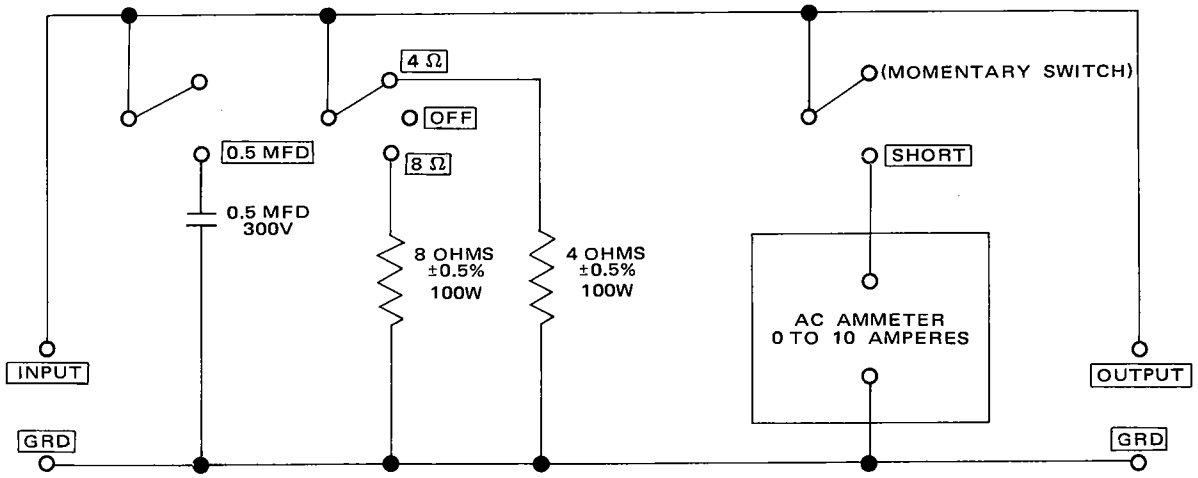

Figure 2. Amplifier Output Load Box Simplified Schematic

2. TEST EQUIPMENT REQUIRED FOR SERVICING

Table 1 lists the test equipment required for servicing the Model 1152DC Stereo Console Amplifier. The wattmeter, AC voltmeter, and variable autotransformer may be assembled as a test fixute as shown schematically in Figure 1. The load resistors and AC ammeter may be assembled into a second test fixture as shown in Figure 2.

Table 1. Test Equipment Required for Servicing

Item	Manufacturer and Model No. (or equivalent)	Use
Distortion Analyzer and Audio Oscillator	Sound Technology, Model 1700B (NOTE: Less than 0.002 percent residual distortion is required.)	Measures distortion, voltage of amplifier output and sinewave source.
Oscilloscope	Tektronix, Model 503; Data, Model 555	Waveform analysis and troubleshooting.
VTVM	RCA Senior Volt-Ohmyst, Model WV-98C	Voltage and resistance measurements.
AC Wattmeter	Simpson, Model 390	Monitors primary power consumption of amplifier.
AC Ammeter (0 to 10 amps)	Commercial Grade	Monitors amplifier output under short circuit condition.
Line Voltmeter (0 to 150V AC)	Commercial Grade	Monitors potential of primary power to amplifier.
Variable Autotransformer (0 to 140V AC, 10 amps)	Powerstat, Model 116B	Adjusts level of primary power to amplifier.
Shorting Plug	Use phono plug with 600 ohms across center pin and shell.	Shorts amplifier input to eliminate noise pickup.
Power Supply Bleeder Resistor (10 ohms at 1W)	Commercial Grade	Discharges power supply filter capacitors prior to disassembly or resistance measurements.
Output Load Resistor (8Ω ± 0.5%, 250W)	Commercial Grade	Provides 8-ohm load for amplifier output termination.
Output Load Resistor (4Ω ± 0.5%2, 250W)	Commercial Grade	Provides 4-ohm load for amplifier output termination.
Output Load Capacitor (0.5 mfd)	Mylar	Provides capacitive load for instability checks.
AC Power Control Box	Optional Item. Fabricate in accordance with Figure 1.	Monitors and controls primary power for amplifier.
Amplifier Output Load Box	Optional Item. Fabricate in accordance with Figure 2.	Provides various amplifier loads and can monitor shorted output.

● EUROPEAN MODEL ONLY

3. VOLTAGE CONVERSION

This Model is equipped with a universal power transformer to permit operation at 110, 120, 220 and 240 V AC 50/60 Hz.
To convert the unit to the required voltage, set the plug as illustrated so that you can adjust the voltages as required.

CAUTION

DISCONNECT POWER SUPPLY CORD FROM AC OUTLET BEFORE CONVERTING VOLTAGE.

Figure 3. Voltage Conversion Chart

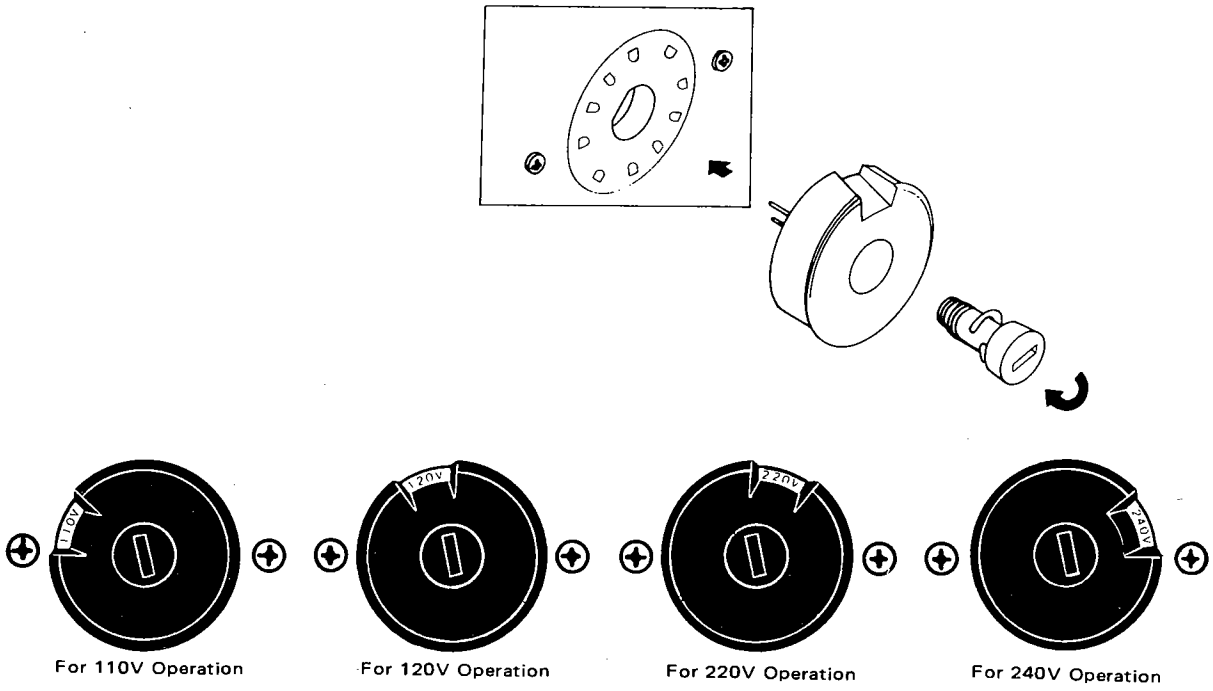

For 110V Operation | For 120V Operation | For 220V Operation | For 240V Operation

4. MAJOR COMPONENT LOCATIONS

4.1 Front Panel Adjustment and Component Locations

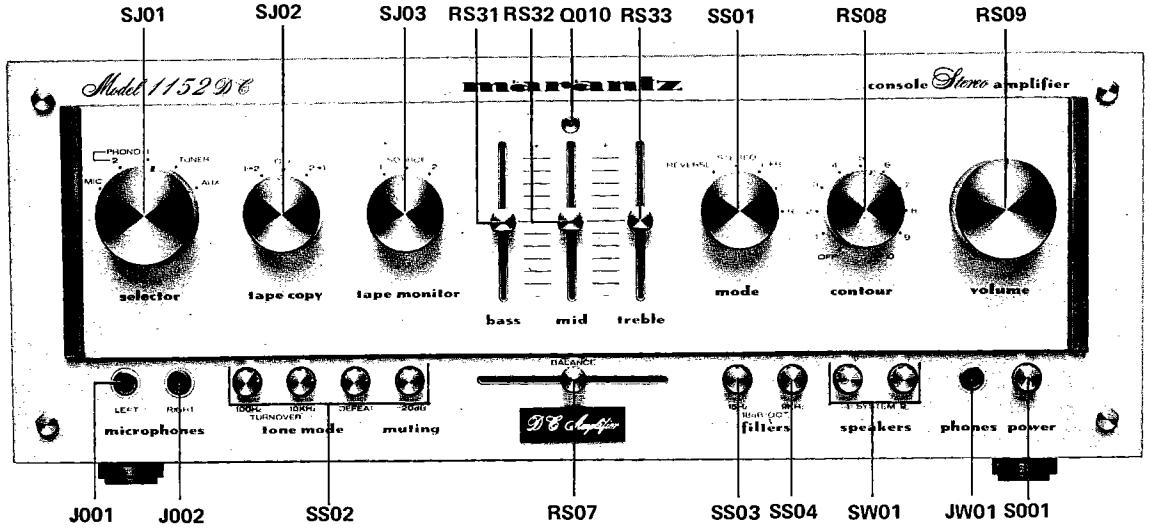

4.2 Main Chassis Component Locations (Top View)

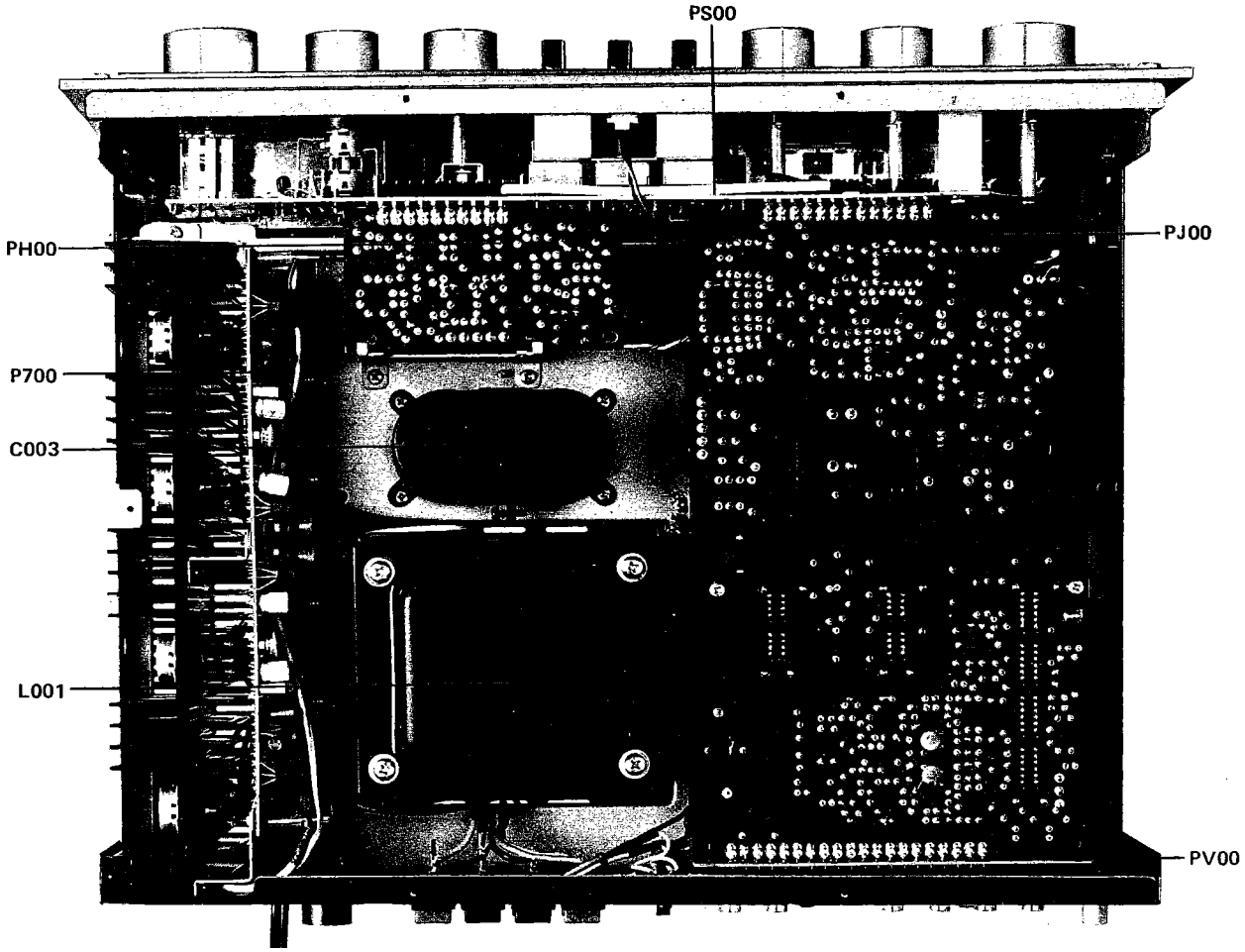

4.3 Rear Panel Adjustment and Component Locations

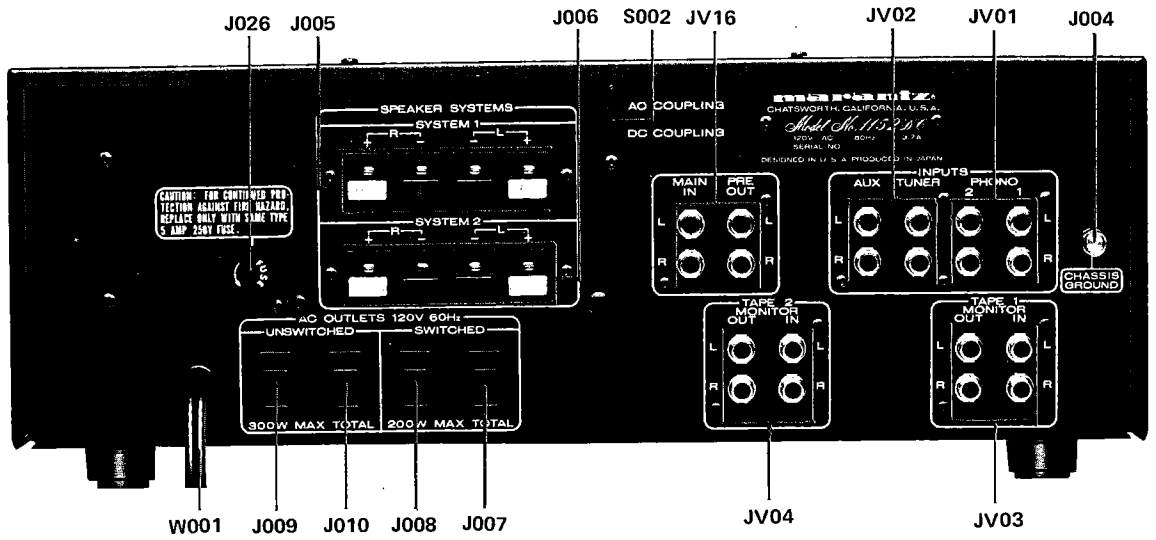

4.4 Main Chassis Component Locations (Bottom View)

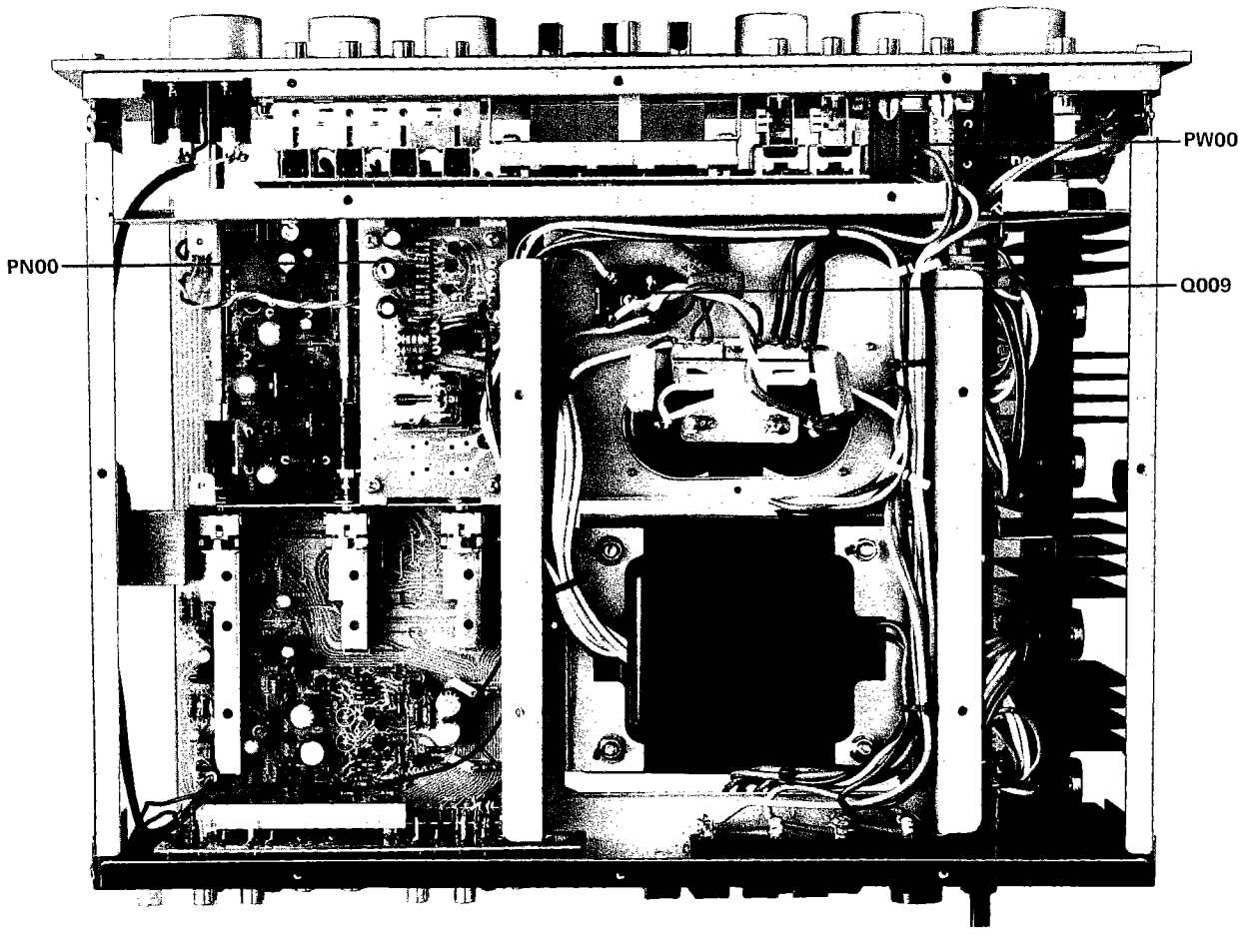

5. DIAGRAM AND COMPONENT LOCATIONS

5.1 Filter Amp. Assembly (PH01) Schematic Diagram and Component Locations

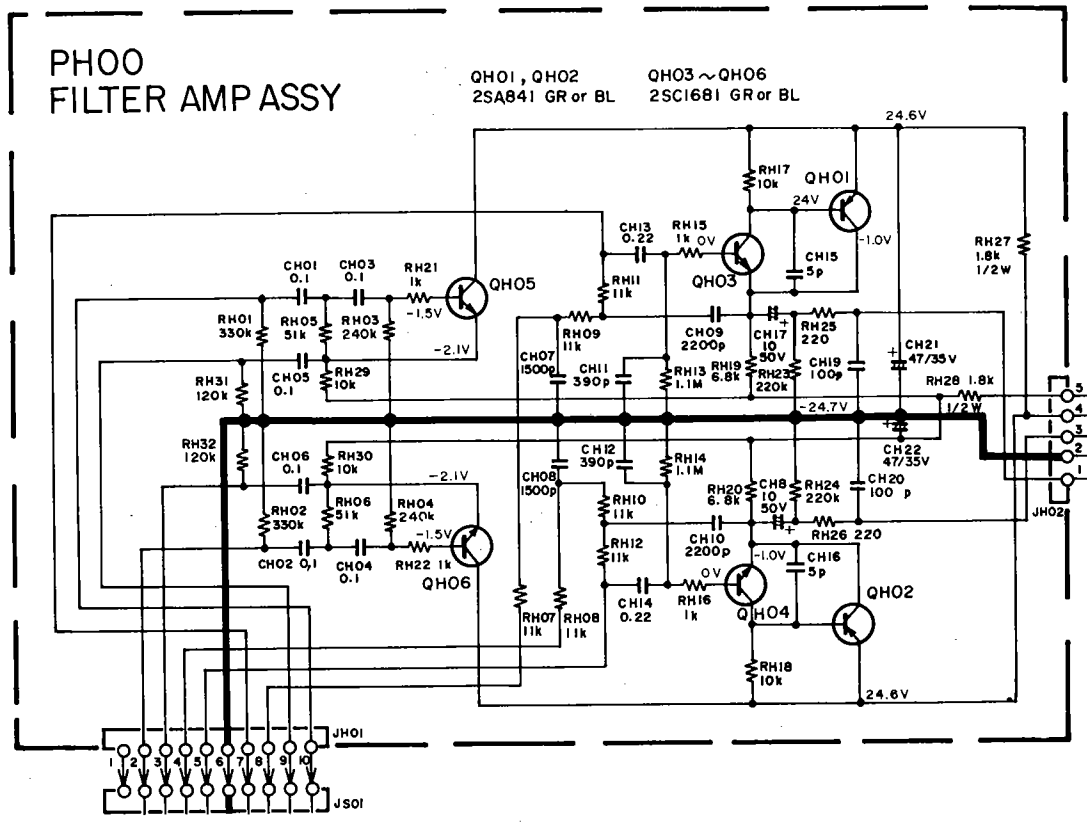

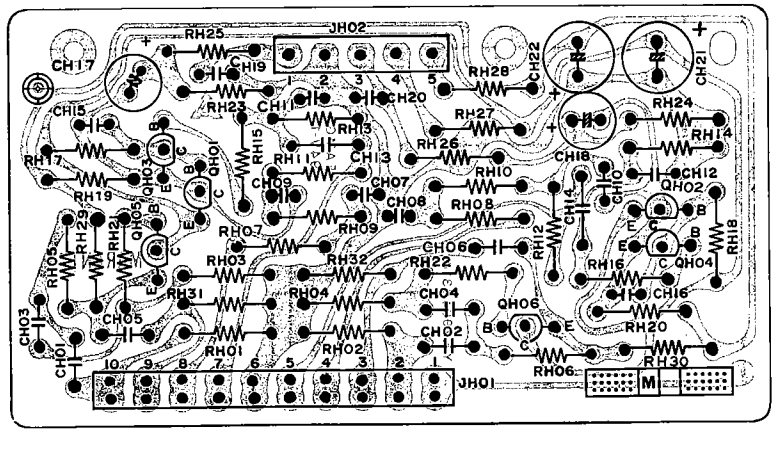

5.2 Pre- Amp. Assembly (PJ01) Schematic Diagram and Component Locations

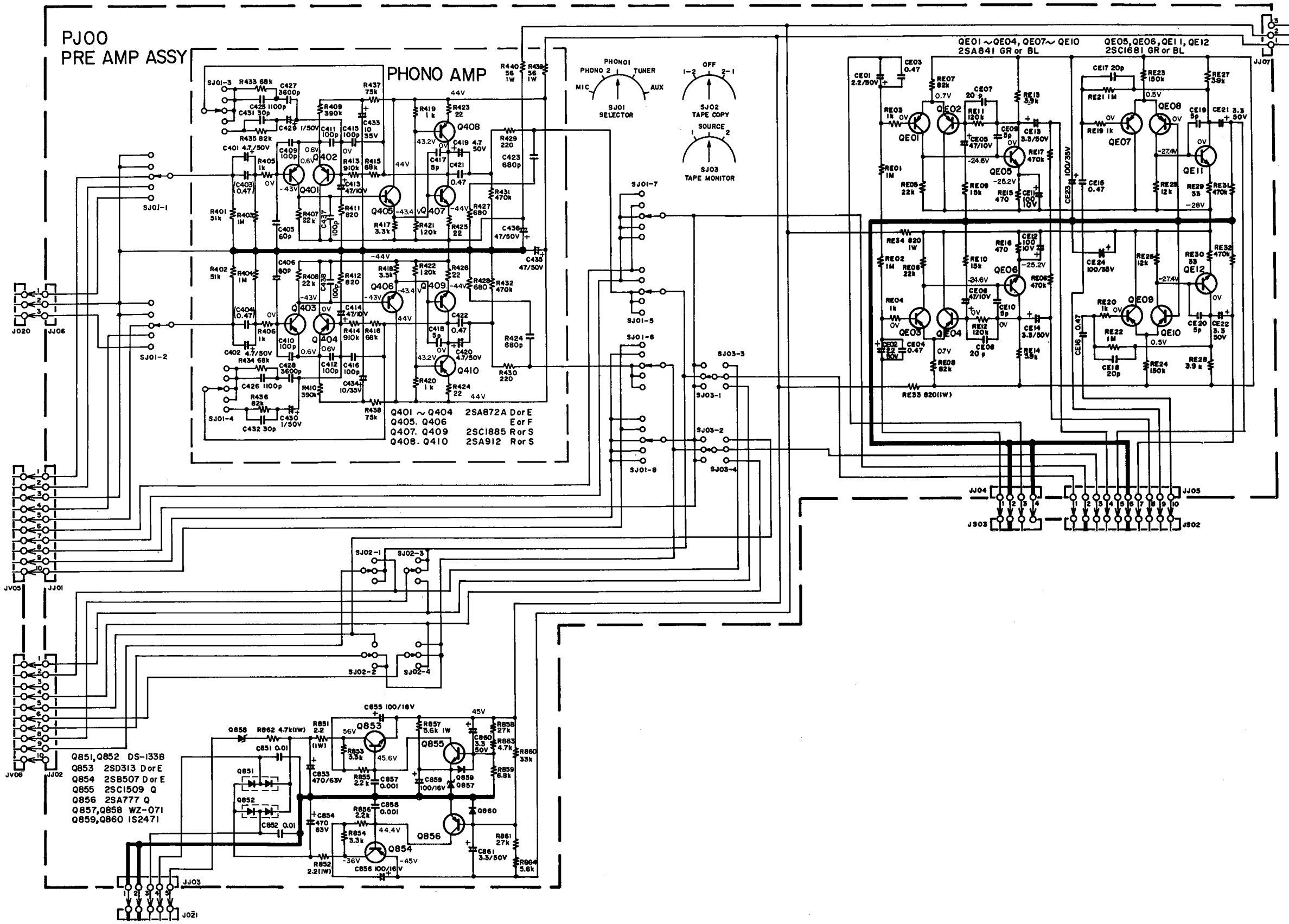

5.3 Speaker Switch Assembly (PW00) Schematic Diagram and Component Locations

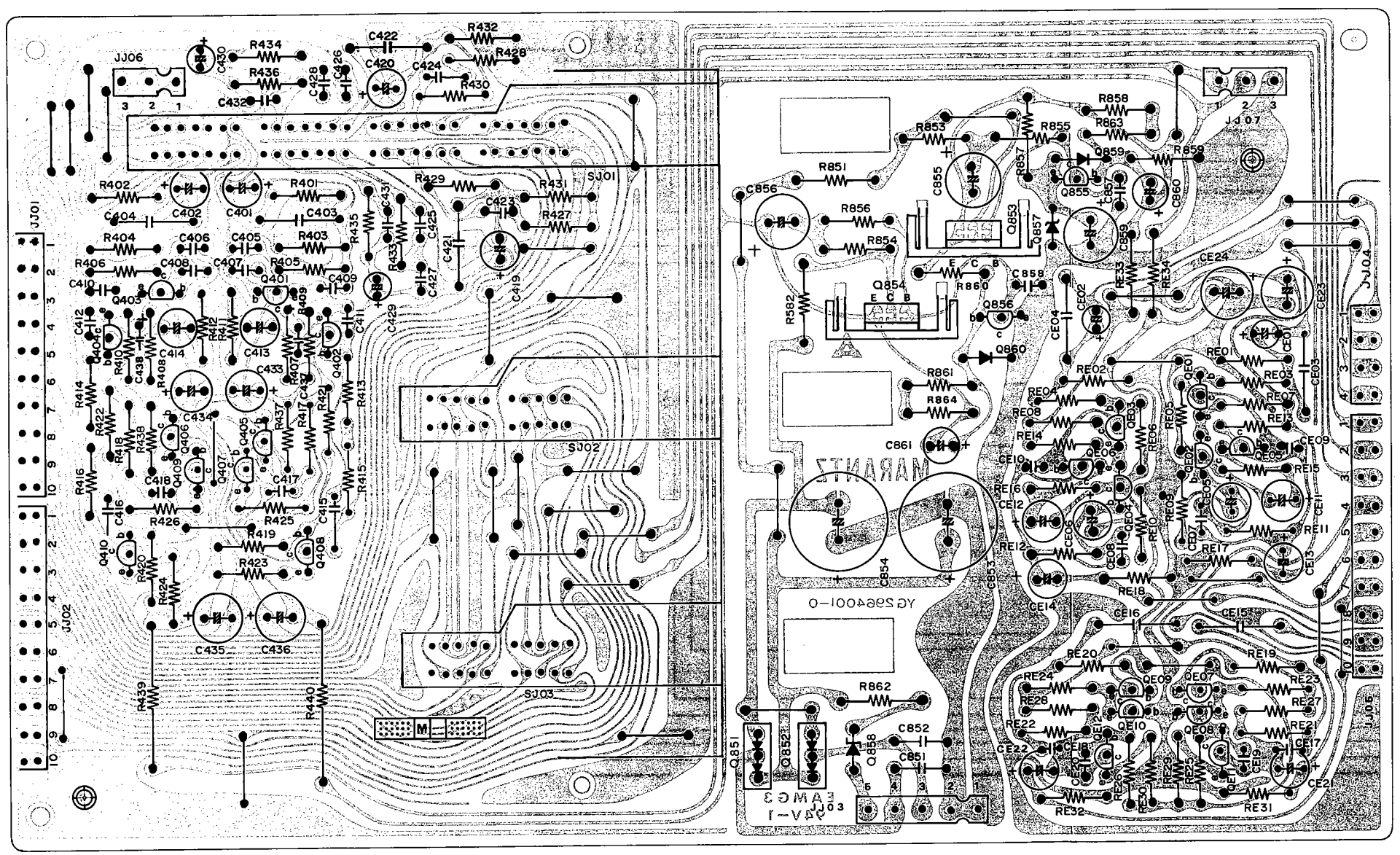

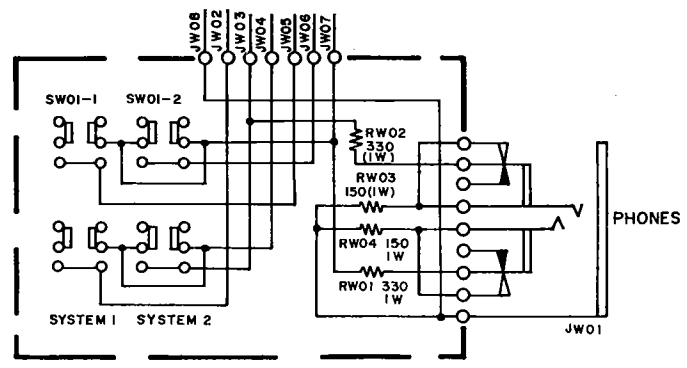

PW00 SPK SW ASSY

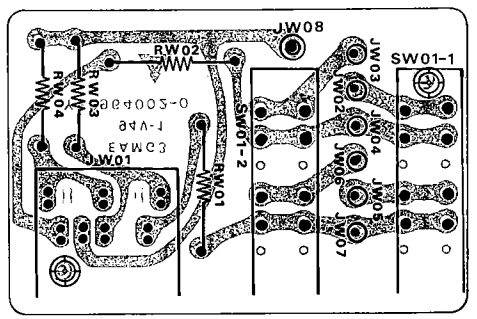

5.4 Front Panel Assembly (PS00) Schematic Diagram and Component Location

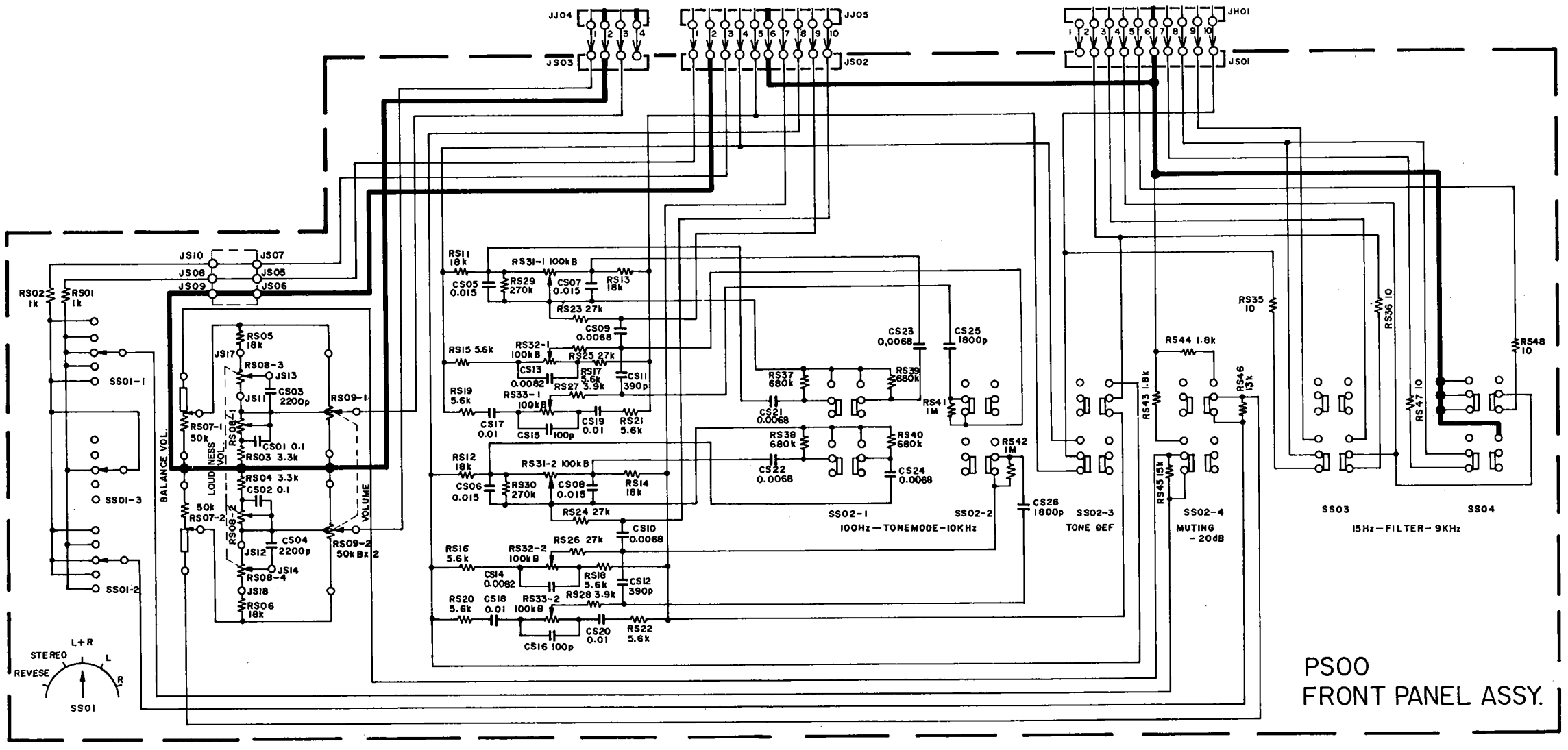

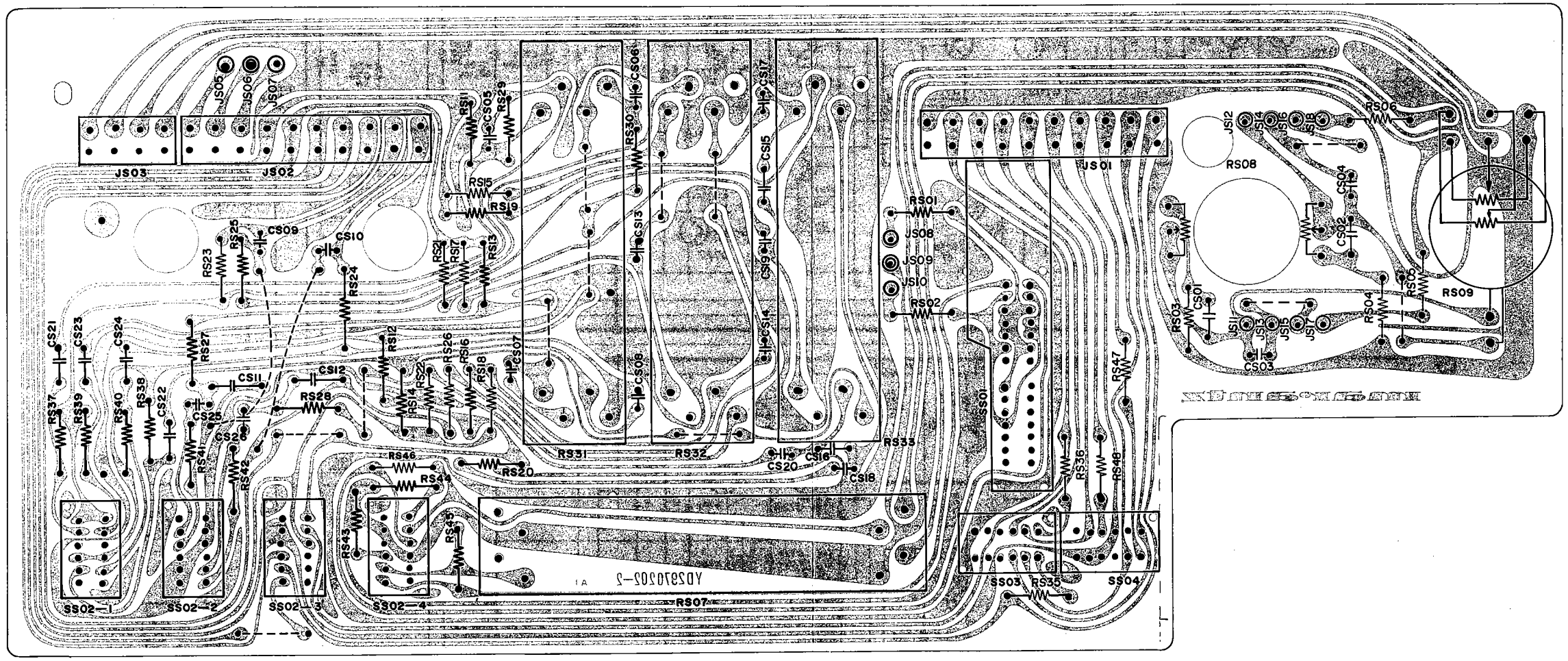
JS03
JS02
JS01
JS05
JS06
JS07
JS08
JS09
JS10
JS11
JS12
JS13
JS14
JS15
JS16
JS17
JS18
RS01
RS02
RS03
RS04
RS05
RS06
RS07
RS08
RS09
RS11
RS12
RS13
RS14
RS15
RS16
RS17
RS18
RS19
RS20
RS21
RS22
RS23
RS24
RS25
RS26
RS27
RS28
RS29
RS30
RS31
RS32
RS33
RS35
RS36
RS37
RS38
RS39
RS40
RS41
RS42
RS43
RS44
RS45
RS46
RS47
RS48
CS01
CS02
CS03
CS04
CS05
CS06
CS07
CS08
CS09
CS10
CS11
CS12
CS13
CS14
CS15
CS16
CS17
CS18
CS19
CS20
CS21
CS22
CS23
CS24
CS25
CS26
SS01
SS02—1
SS02—2
SS02—3
SS02—4
SS03
SS04

5.5 Main Amp. Assembly (P700) Schematic Diagram and Component Locations

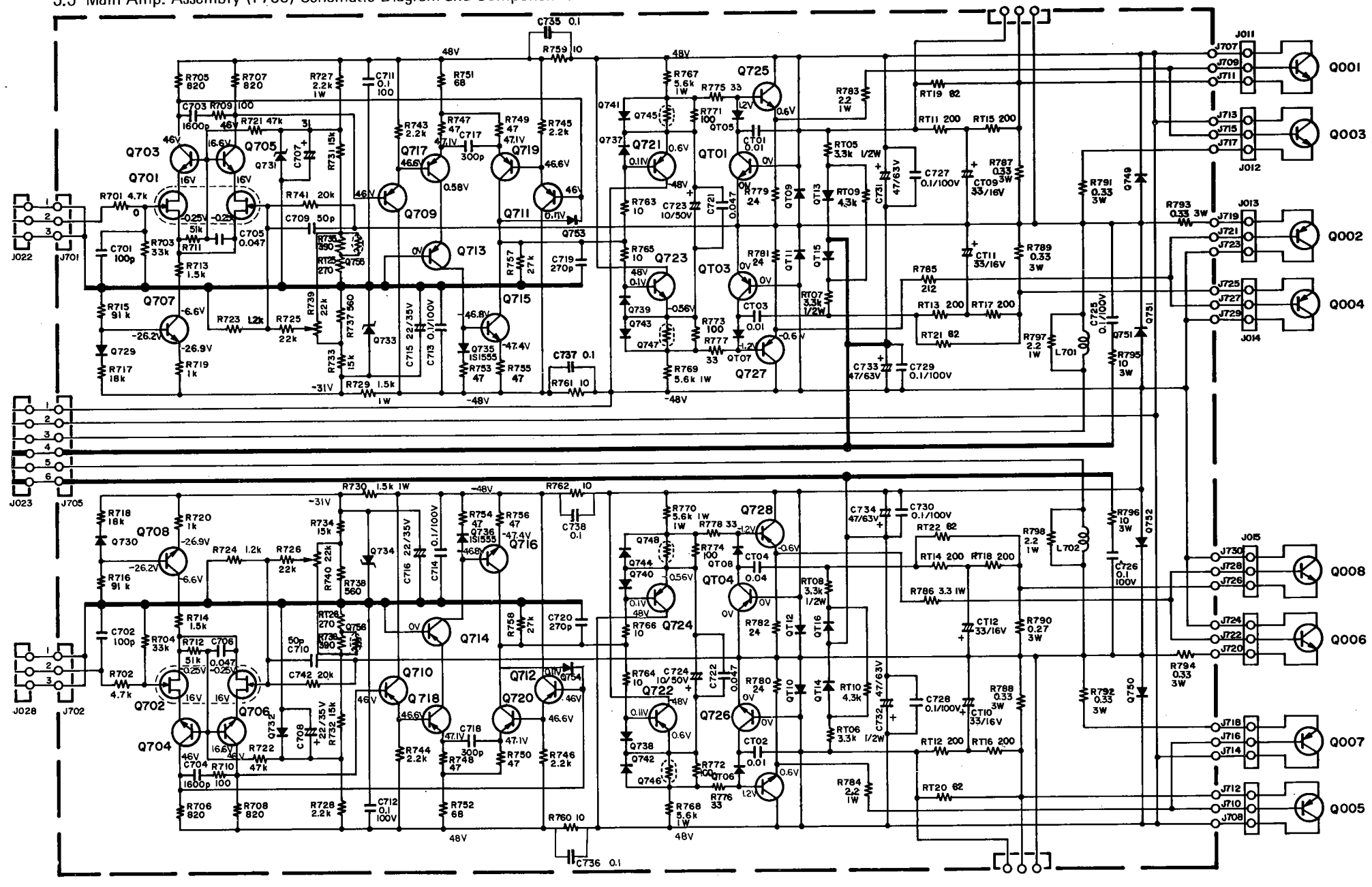

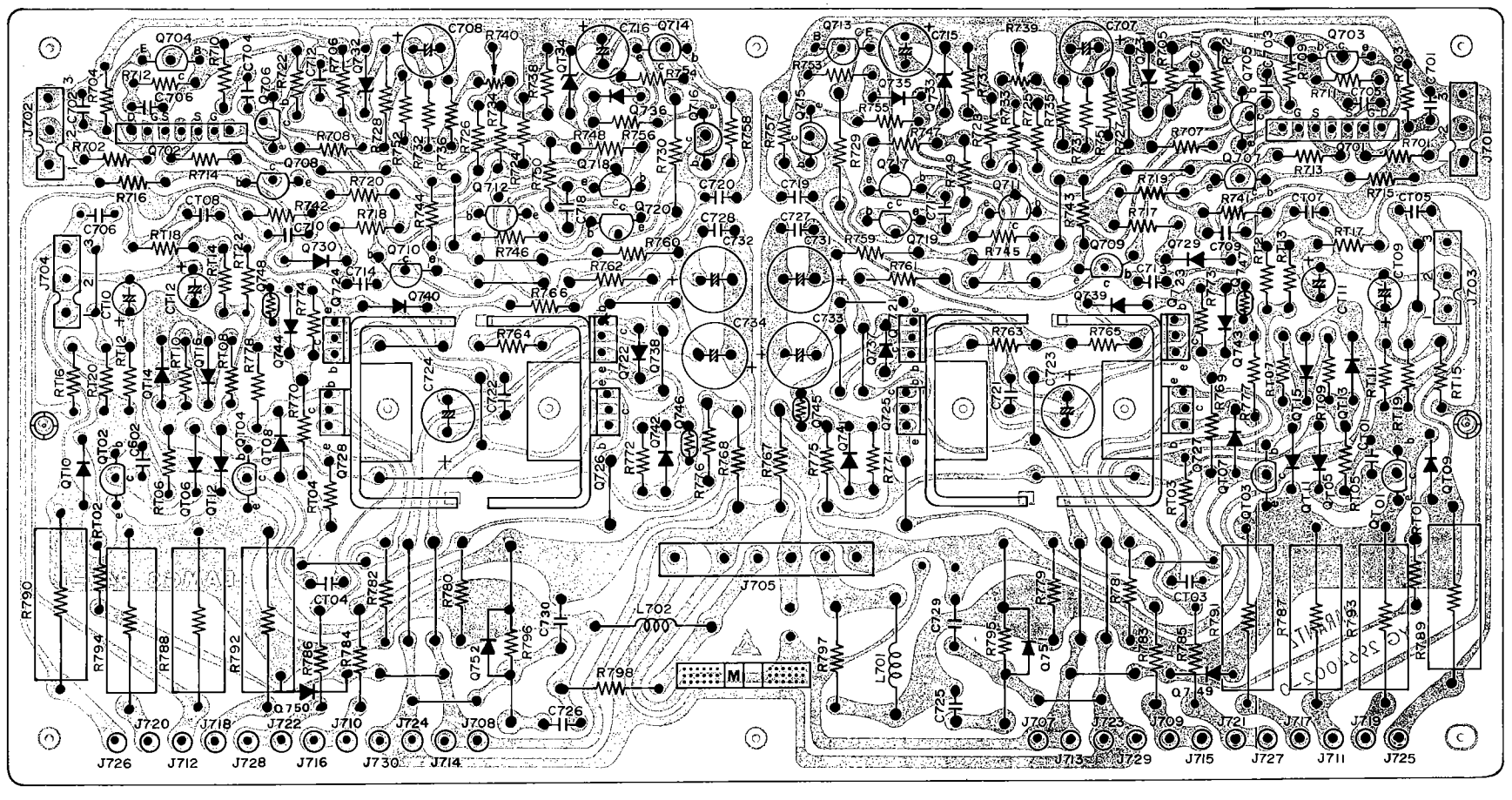

5.6 Relay Assembly (PN00)
Schematic Diagram and
Component Locations

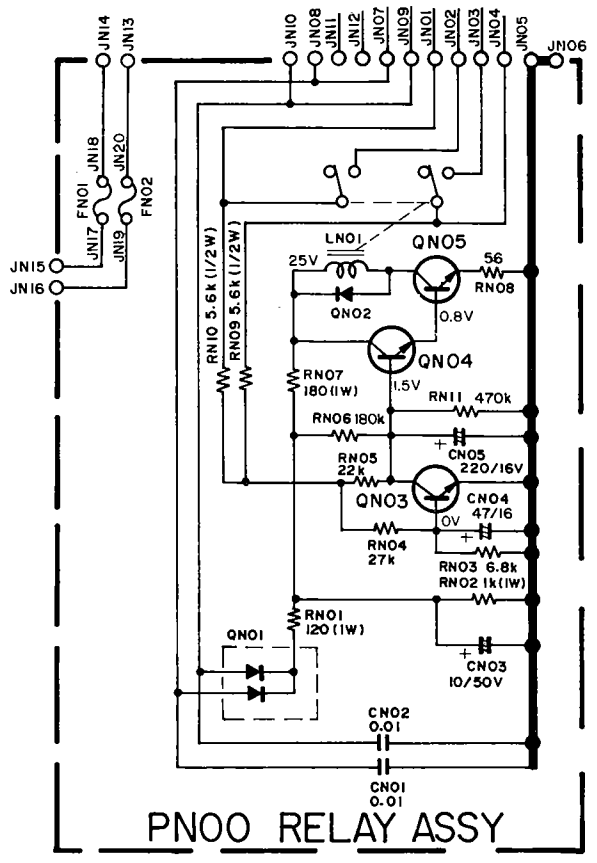

PN00 RELAY ASSY

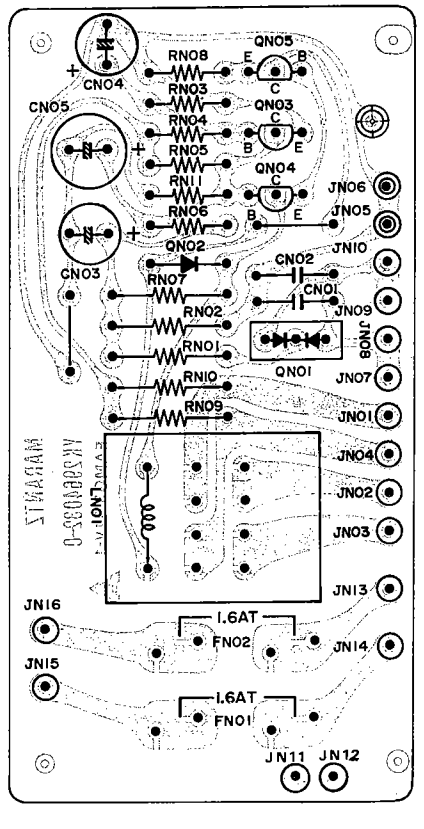

5.7 Rear Panel Assembly (PV00) Schematic Diagram and Component Locations

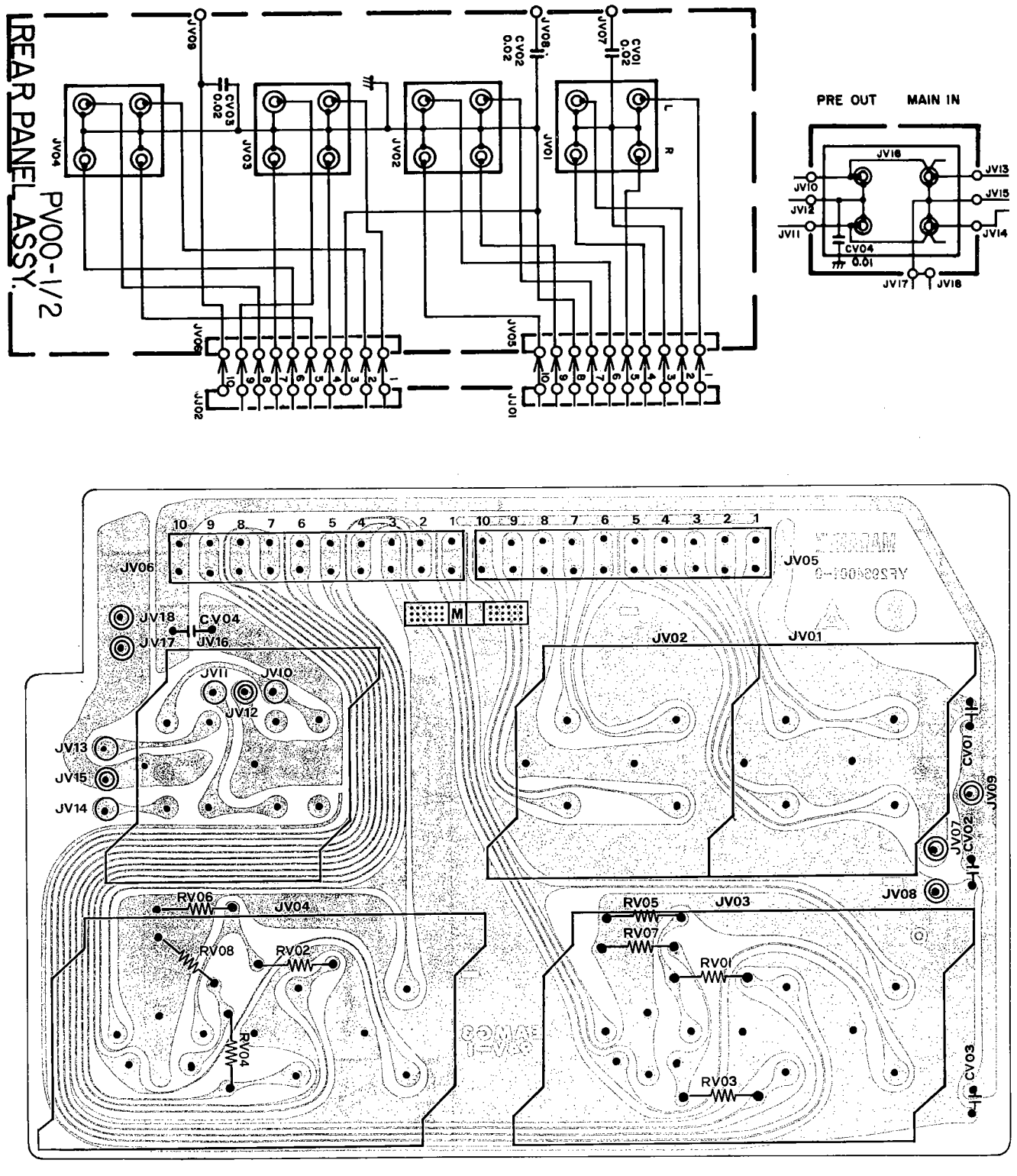

6. BLOCK DIAGRAM

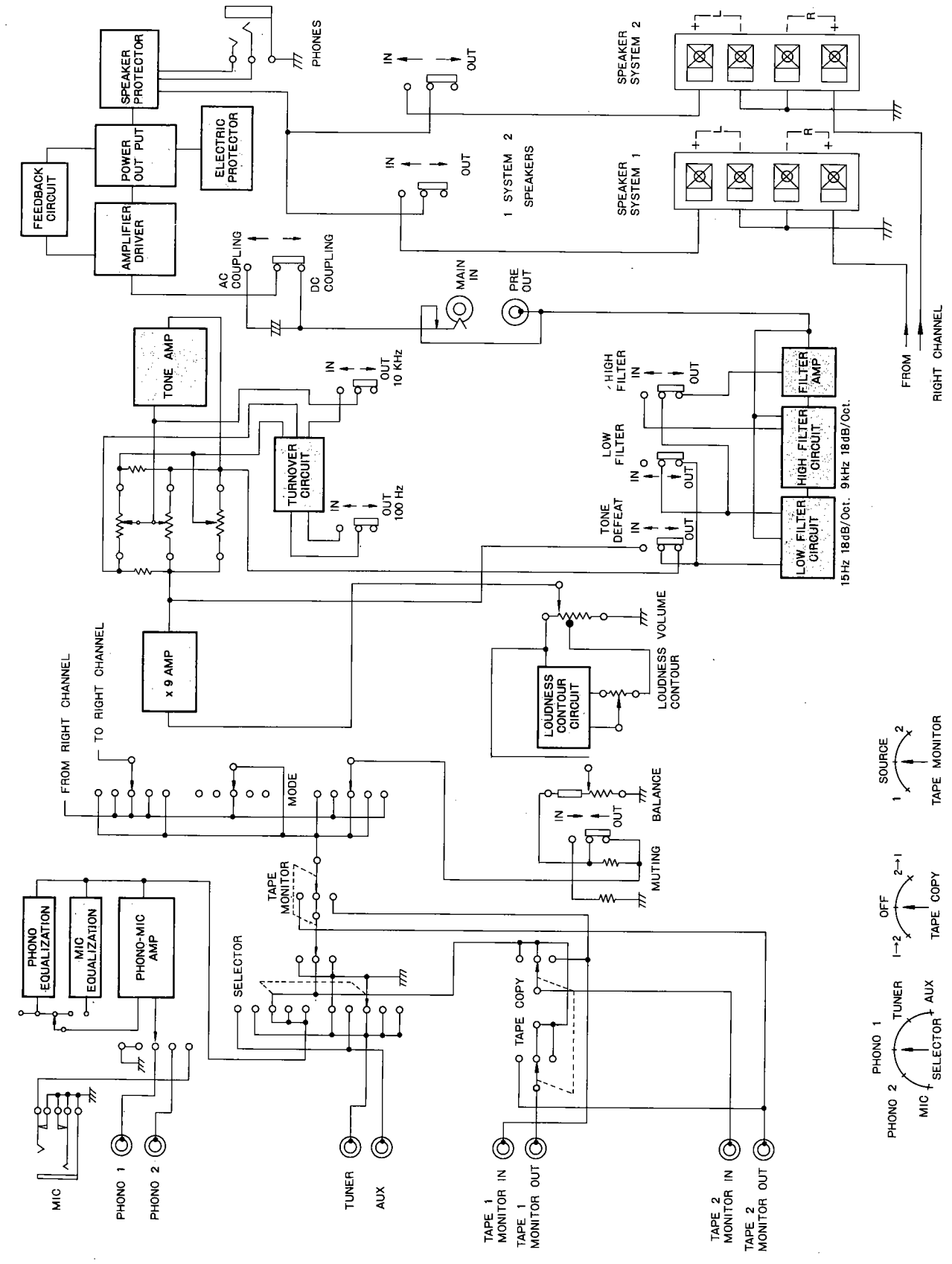

7. CONNECTION DIAGRAM

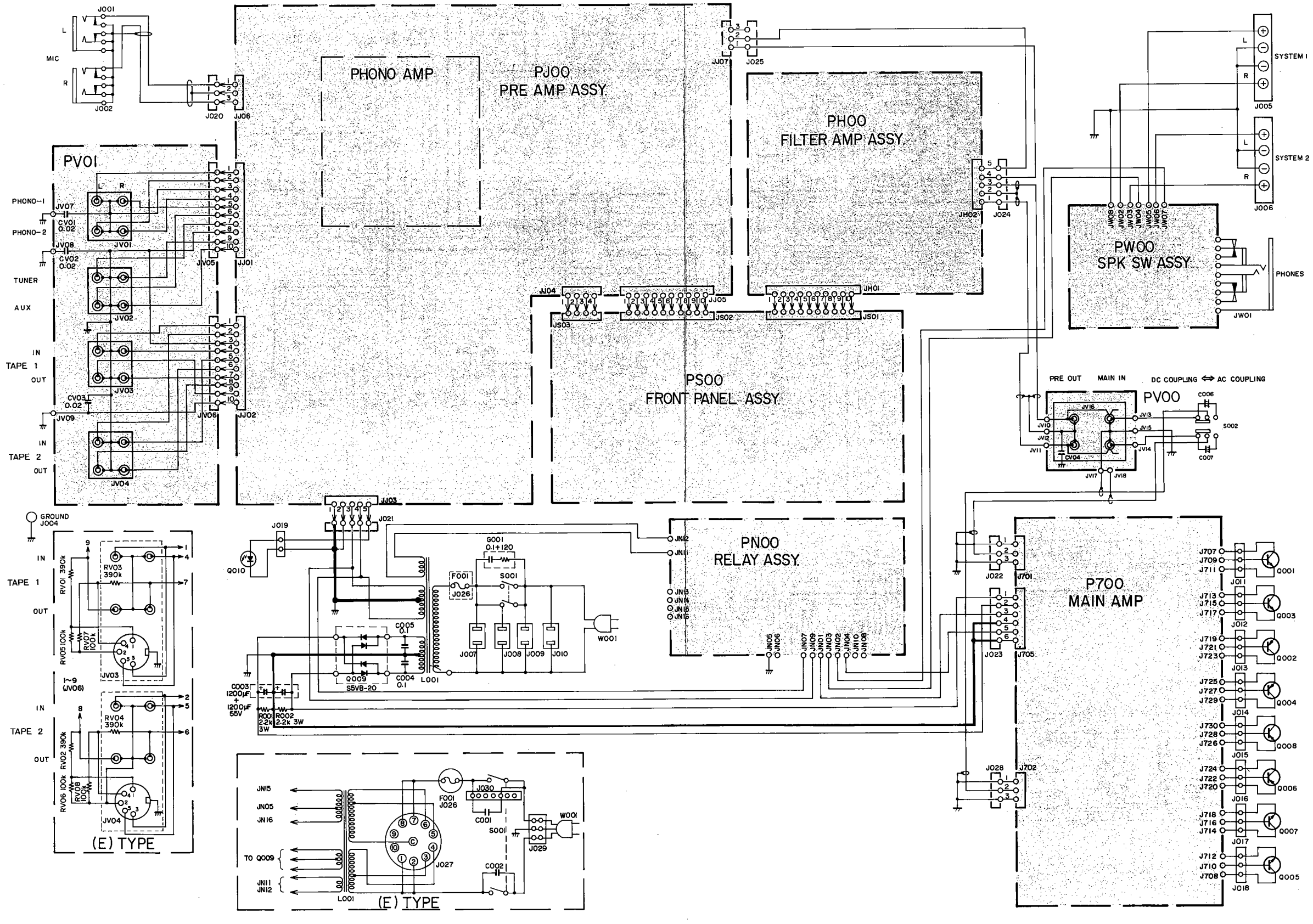

8. SCHEMATIC DIAGRAM

Model 1152DC

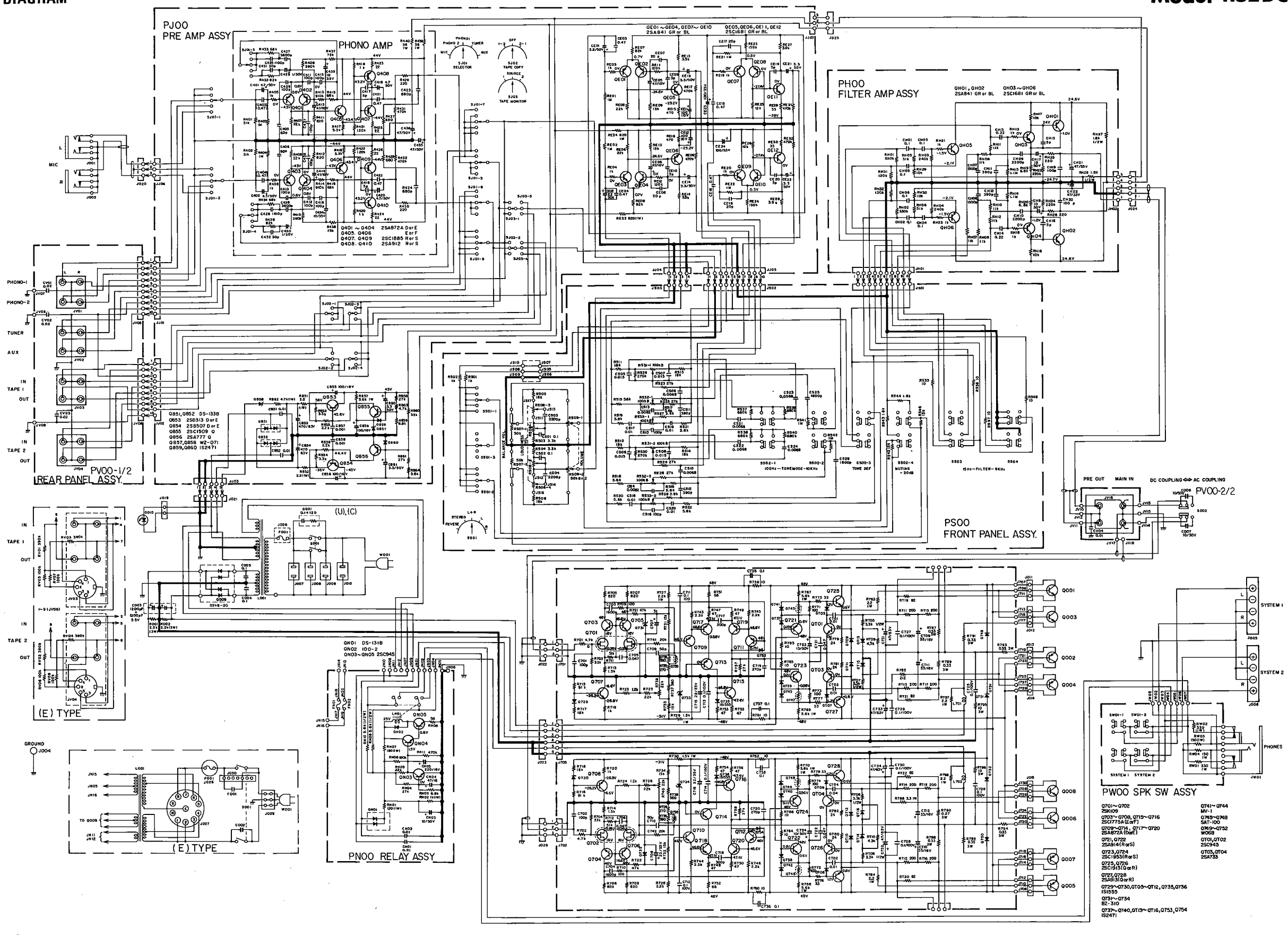

9. EXPLODED MECHANICAL DIAGRAM

9.1 Cabinet

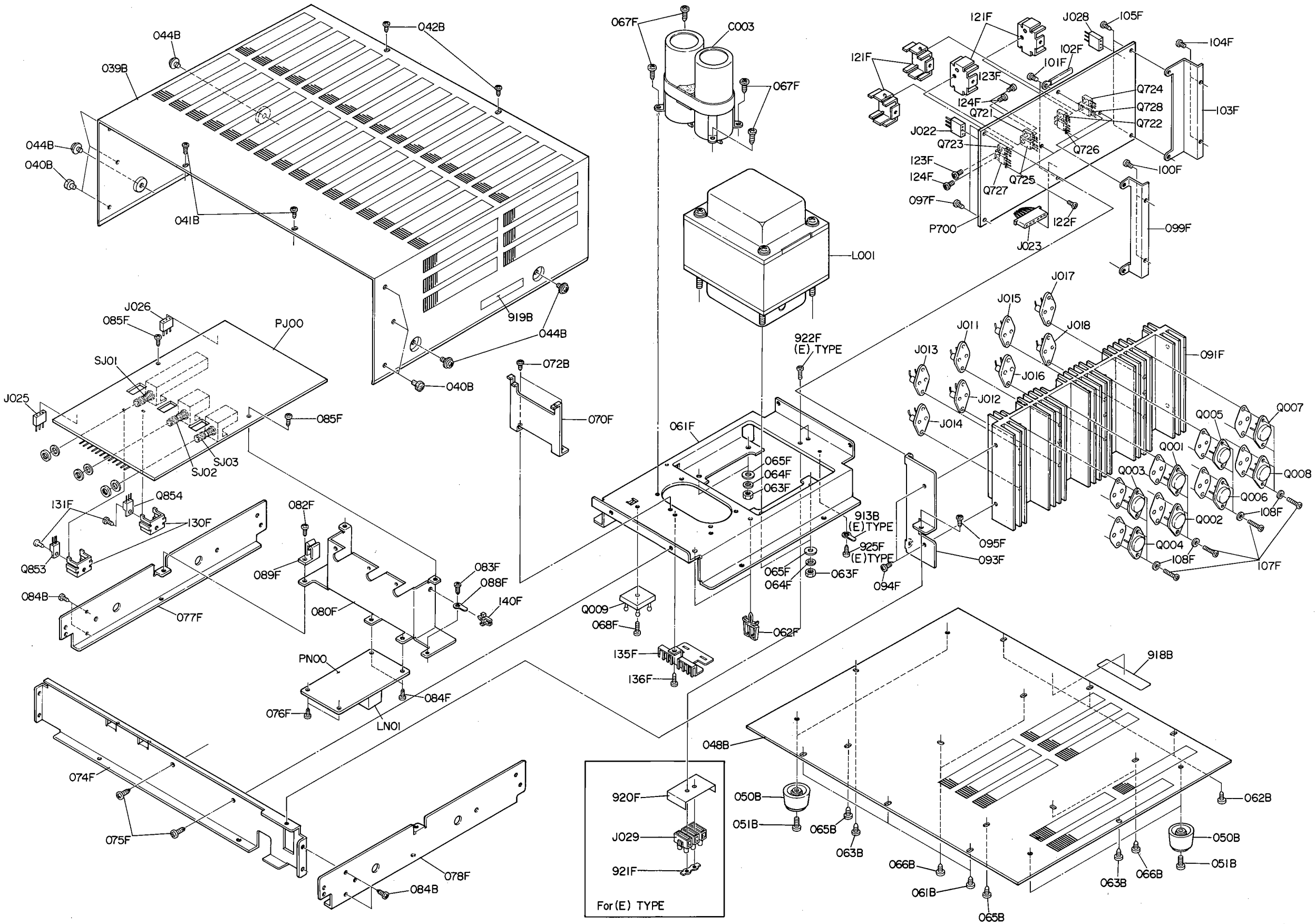

9.2 Chassis

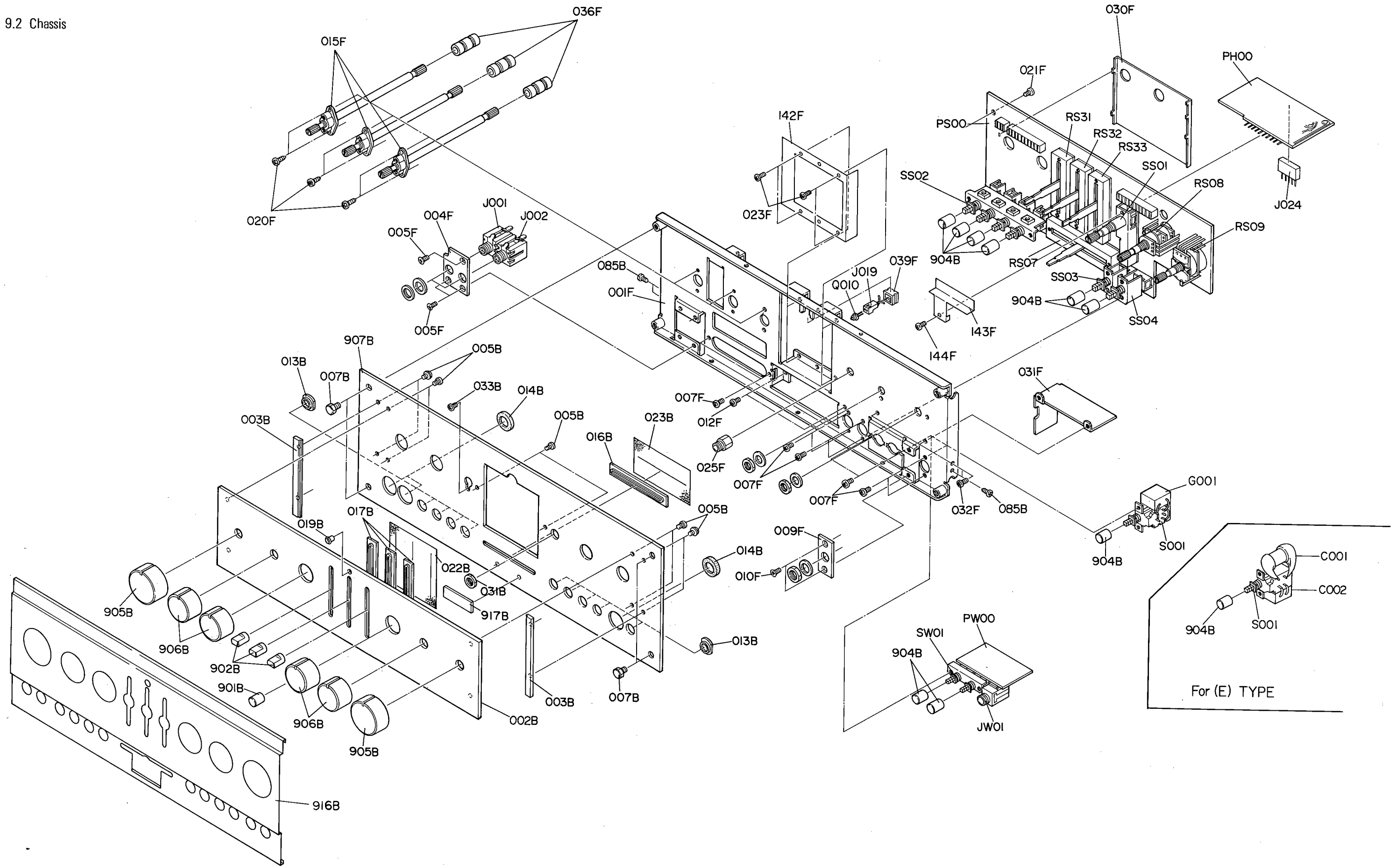
036F
015F
020F
004F
J001
J002
005F
005F
907B
013B
007B
005B
033B
014B
003B
005B
016B
023B
019B
017B
022B
031B
917B
905B
906B
902B
901B
906B
905B
916B
002B
003B
007B
005B
014B
009F
010F
013B
142F
023F
085B
001F
J019
Q010
039F
007F
012F
025F
007F
007F
030F
021F
PS00
RS31
RS32
RS33
SS01
SS02
RS08
RS09
RS07
SS03
SS04
904B
904B
143F
144F
031F
032F
085B
PH00
J024
G001
S001
904B
C001
C002
S001
904B
PW00
SW01
904B
JW01
For (E) TYPE

9.3 Rear Panel for U.S.A. & Canadian Models

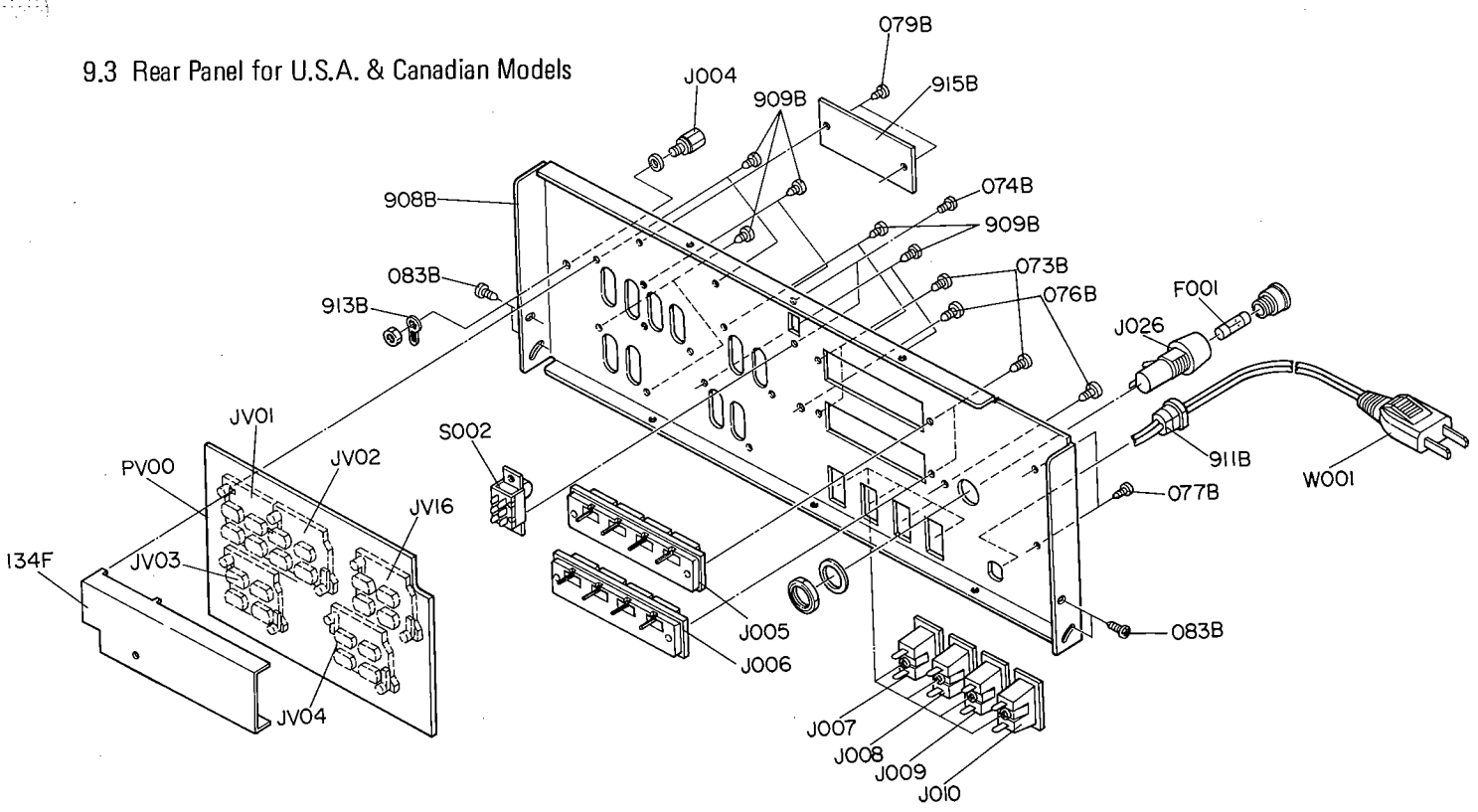

9.4 Rear Panel for European Model

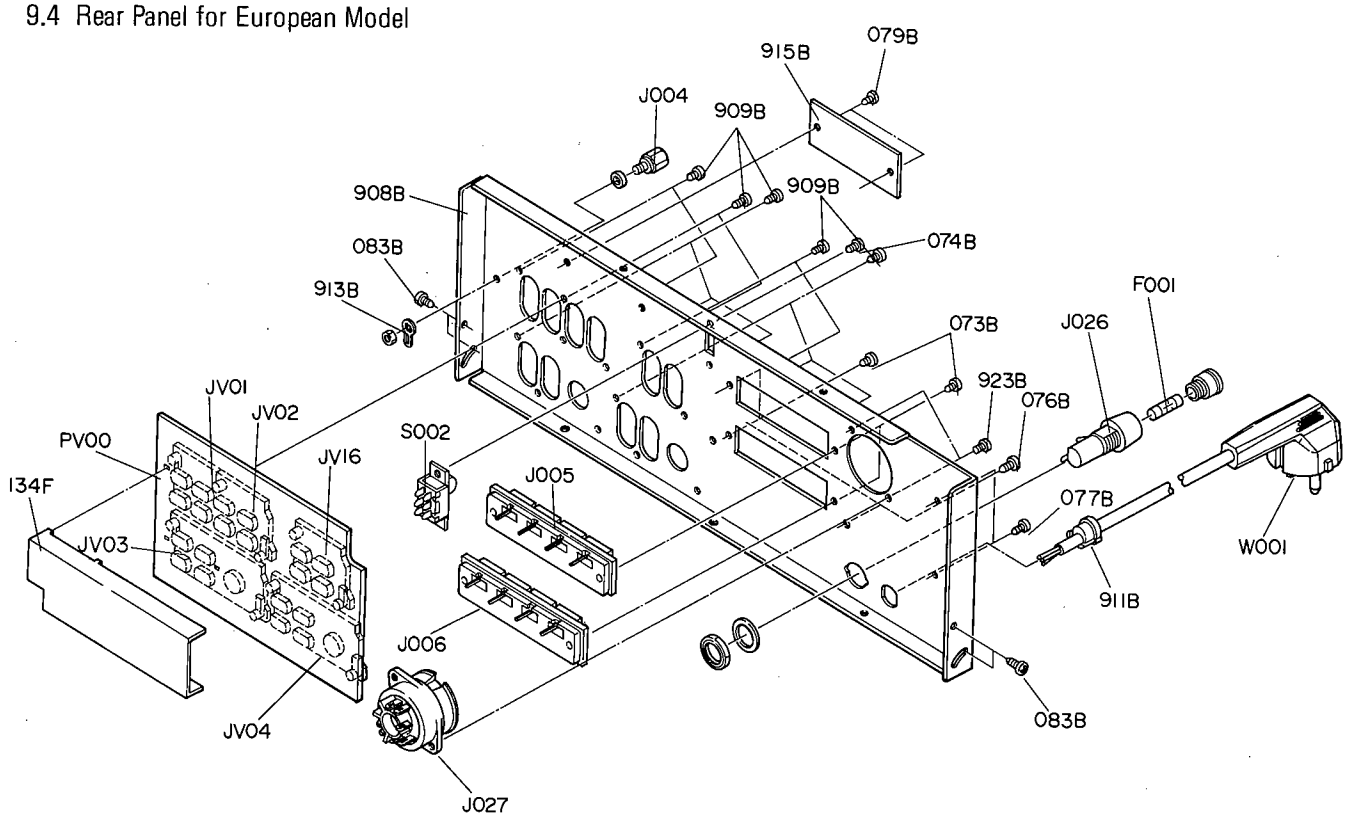

10. PACKING MATERIAL EXPLODED VIEW

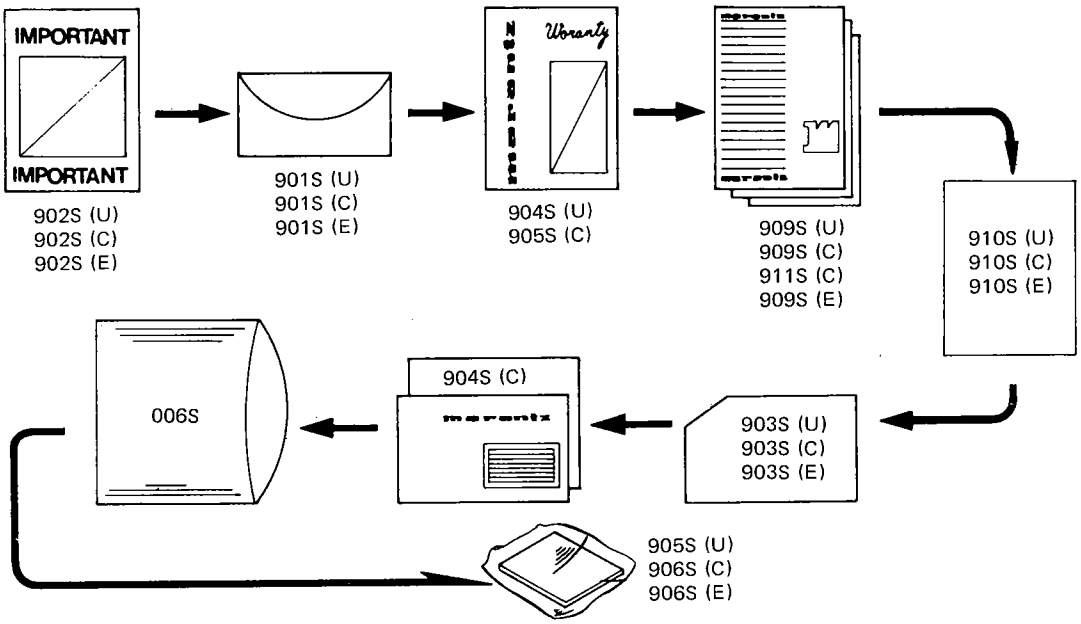

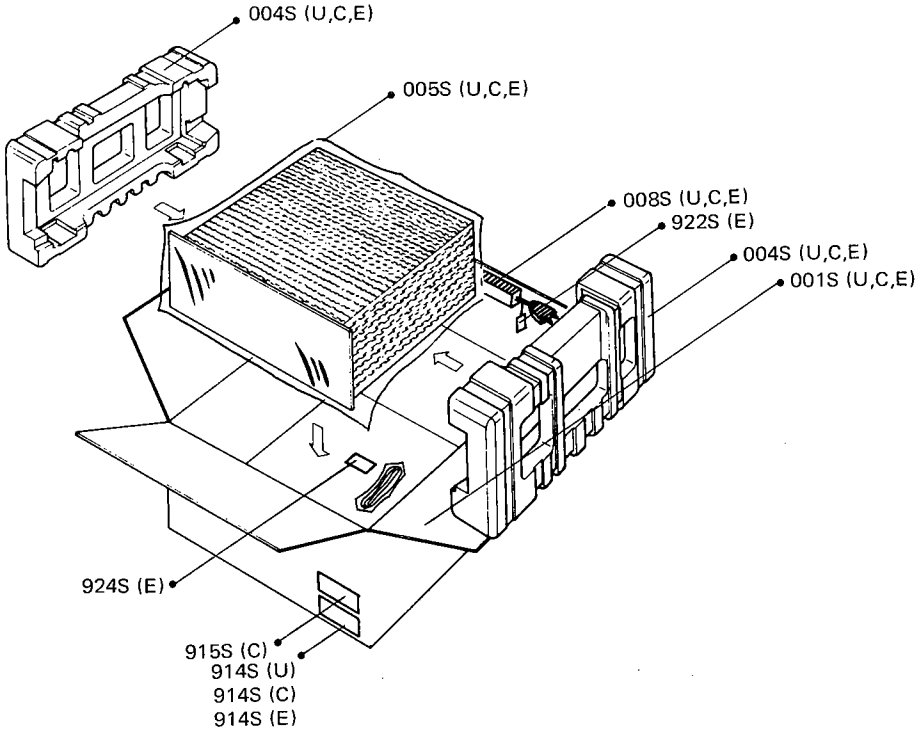

- (U) for U.S.A.
- (C) for Canada
- (E) for Europe

11. PARTS LIST

- (U) for U.S.A.
- (C) for Canada
- (E) for Europe

REF. DESIG.	Q'TY U	C	E	PART NO.	DESCRIPTION
A	1	1	1	2964063400	Front Panel Assembly
002B	1	1	1	2964063020	Escutcheon
003B	2	2	2	2965063050	Escutcheon
005B	10	10	10	51480306A9	F. Washer Screw, F3 x 6
013B	9	9	9	2978259012	Bushing
014B	3	3	3	2978259020	Bushing
016B	1	1	1	2926259040	Bushing
017B	3	3	3	2970259010	Bushing
019B	1	1	1	2979259022	Bushing
022B	1	1	1	2970303010	Mask
023B	1	1	1	2926303020	Mask
907B	1	1	1	2964063013	Escutcheon
916B	1	1	1	2964053012	Cover
917B	1	1	1	2979251040	Badge
PJ08	22	22	22	2933118020	Spacer
PJ09	4	4	4	2933118010	Spacer
PJ11	37	37	37	75061251P0	Jumper
PN08	7	7	7	2933118020	Spacer
PN10	2	2	2	75061001P0	Jumper
PS11	12	12	12	75061251P0	Jumper
PW08	8	8	8	2933118020	Spacer
P007	4	4	4	3444118050	Spacer
P708	72	72	72	2933118020	Spacer
P711	26	26	26	75061001P0	Jumper
P712	6	6	6	75061501P0	Jumper
001F	1	1	1	2970160012	Bracket
001S	1	1	1	2964801010	Packing Case
004F	1	1	1	2970120010	Insulator
004S	2	2	2	2963809010	Cushion
005F	3	3	3	51340306B0	F.H. Tapped Screw, F3 x 6
005S	1	1	1	9014550180	Polyethylene Bag
006S	1	1	1	9013025010	Polyethylene Bag
007B	4	4	4	52017069J0	H. Head Bolt
007F	10	10	10	51100306A9	B.H.M. Screw, B3 x 6
008S	1	1	1	2864804010	Sleeve
009F	1	1	1	2970120020	Insulator
010F	2	2	2	51340306B0	F.H. Tapped Screw, F3 x 6
012F	2	2	2	51100306A9	B.H.M. Screw, B3 x 6
015F	3	3	3	2964112502	Shaft
020F	6	6	6	51280308B0	B.H. Tapped Screw, B3 x 8
021F	1	1	1	51280306B0	B.H. Tapped Screw, B3 x 6
023F	3	3	3	51100306A9	B.H.M. Screw, B3 x 6
025F	1	1	1	2970101010	Support
031B	1	1	1	53118179A0	Hexagon Nut
031F	1	1	1	2970109012	Shield
032F	2	2	2	51100306A9	B.H.M. Screw, B3 x 6
033B	1	1	1	51302608B0	P.H. Tapped Screw, P2.6 x 8

REF. DESIG.	Q'TY U	C	E	PART NO.	DESCRIPTION
036F	3	3	3	2963125010	Joint
039B	1	1	1	2963257013	Lid
039F	1	1	1	2978259060	Bushing
040B	6	6	6	2979259030	Bushing
041B	2	2	2	51280306U0	B.H. Tapped Screw, B3 x 6
042B	2	2	2	51280306U0	B.H. Tapped Screw, B3 x 6
044B	4	4	4	5148040659	F. Washer Screw, F4 x 6
048B	1	1	1	2964257013	Lid
050B	4	4	4	2932057010	Leg
051B	4	4	4	5157041050	P. Tapped Screw, P4 x 10
061B	3	3	3	51280410U0	B.H. Tapped Screw, B4 x 10
061F	1	1	1	2964105014	Chassis
062B	3	3	3	51280410U0	B.H. Tapped Screw, B4 x 10
062F	2	2	2	2886005030	Clamper
063B	2	2	2	51280410U0	B.H. Tapped Screw, B4 x 10
063F	4	4	4	53110501A9	Hexagon Nut
064F	4	4	4	54040502A0	Spring Washer
065B	2	2	2	51280410U0	B.H. Tapped Screw, B4 x 10
065F	4	4	4	54020501A0	Flat Washer, P.
066B	4	4	4	51280410U0	B.H. Tapped Screw, B4 x 10
067F	4	4	4	51280306B0	B.H. Tapped Screw, B3 x 6
068F	1	1	1	51280312B0	B.H. Tapped Screw, B3 x 12
070F	1	1	1	2964160022	Bracket
072F	2	2	2	51280306B0	B.H. Tapped Screw, B3 x 6
073B	4	4	4	51280308U0	B.H. Tapped Screw, B3 x 8
074B	2	2	2	5110306S9	B.H.M. Screw, B3 x 6
074F	1	1	1	2964126013	Stay
075F	2	2	2	51280408B0	B.H. Tapped Screw, B4 x 8
076B	2	2	2	51280408U0	B.H. Tapped Screw, B4 x 8
076F	2	2	2	51280306B0	B.H. Tapped Screw, B3 x 6
077B	2	2	2	51280308U0	B.H. Tapped Screw, B3 x 8
077F	1	1	1	2964105022	Chassis
078F	1	1	1	2964105032	Chassis
079B	2	2	2	51760306B0	OS Tapped Screw, O3 x 6
080F	1	1	1	2964160012	Bracket
081F	1	1	1	1382005030	Clamper
082F	1	1	1	51280306B0	B.H. Tapped Screw, B3 x 6
083B	4	4	4	51280306U0	B.H. Tapped Screw, B3 x 6
083F	1	1	1	51280306B0	B.H. Tapped Screw, B3 x 6
084B	4	4	4	51280306B0	B.H. Tapped Screw, B3 x 6
084F	2	2	2	51280306B0	B.H. Tapped Screw, B3 x 6
085B	4	4	4	51280306B0	B.H. Tapped Screw, B3 x 6
085F	2	2	2	51280306B0	B.H. Tapped Screw, B3 x 6
086F	1	1	1	51280306B0	B.H. Tapped Screw, B3 x 6
087F	1	1	1	1382005030	Clamper
088F	1	1	1	62030049W0	Lug
089F	1	1	1	2886005060	Clamper
091F	1	1	1	2964267010	Heatsink
093F	1	1	1	2964160070	Bracket
094F	2	2	2	51280306B0	B.H. Tapped Screw, B3 x 8
095F	1	1	1	51280306B0	B.H. Tapped Screw, B3 x 6
096F	1	1	1	51280306B0	B.H. Tapped Screw, B3 x 6
097F	2	2	2	51280306B0	B.H. Tapped Screw, B3 x 6
099F	1	1	1	2964160080	Bracket
100F	2	2	2	51280306B0	B.H. Tapped Screw, B3 x 6
101F	2	2	2	51280306B0	B.H. Tapped Screw, B3 x 6

- (U) for U.S.A.
- (C) for Canada
- (E) for Europe

REF. DESIG.	Q'TY U	C	E	PART NO.	DESCRIPTION
102F	1	1	1	1382005030	Clamper
103F	1	1	1	2964160040	Bracket
104F	2	2	2	5128030680	B.H. Tapped Screw, B3 x 6
105F	2	2	2	5128030680	B.H. Tapped Screw, B3 x 6
107F	16	16	16	51100316A9	B.H.M. Screw, B3 x 16
108F	16	16	16	54040302N0	Spring Washer
121F	4	4	4	2212267020	Heatsink
122F	4	4	4	5110030589	B.H.M. Screw, B3 x 5
123F	4	4	4	5128030500	B.H. Tapped Screw, B3 x 5
124F	4	4	4	5128030800	B.H. Tapped Screw, B3 x 8
130F	2	2	2	2963267020	Heatsink
131F	2	2	2	5128030880	B.H. Tapped Screw, B3 x 8
134F	1	1	1	2964109020	Shield
135F	1	1	1	2964123010	Contactor
136F	1	1	1	5160030680	Washer Screw
140F	1	1	1	2886005060	Clamper
142F	1	1	1	2964109030	Shield
143F	1	1	1	2964109040	Shield
144F	1	1	1	5128030600	B.H. Tapped Screw, B3 x 6
146F	1	1	1	2886005050	Clamper
901B	1	1	1	2970154012	Knob
901F		2	2	5128030680	B.H. Tapped Screw, B3 x 6
901S	1			2577813010	Envelope
901S			1	2818813010	Envelope
901S		1		2918813012	Envelope
902B	3	3	3	2970154023	Knob
902F		1	1	2964160120	Bracket
902S	1			2577851020	Instructions
902S		1	1	2818851120	Instructions
903F		2	2	5128030680	B.H. Tapped Screw, B3 x 6
903S	1			2577854012	Guarantee Card
903S		1	1	9630000180	Guarantee Card
904B	9	9	9	2963154032	Knob
904F		1	1	2911861162	Label
904S	1			2818854023	Guarantee Card
904S		1		9650000050	S. Station Card
905B	2	2	2	2963154013	Knob
905F		1	1	9510601030	Label
905S	1			2818851040	Instructions
905S		1		2818854042	Guarantee Card
906B	4	4	4	2970154053	Knob
906S		1	1	2818851140	Instructions
908B	1	1		2964160213	Bracket
908B			1	2964160223	Bracket
909B	10	10	12	5128030880	B.H. Tapped Screw, B3 x 8
909S	1			2964851010	Instructions
909S		1	1	2964851310	Instructions
910S	1			2964851020	Instructions
910S			1	2964851030	Instructions
910S		1		2964851050	Instructions
911B			1	1455259040	Bushing
911B	1	1		1455259070	Bushing
911S		1		2886851100	Instructions
913B	1	1	2	62040029W0	Lug
914S	4			9522815010	Serial No. Card
914S			4	9523015110	Serial No. Card
914S		4		9523015120	Serial No. Card
915B	1			2964265010	Indicator
915B		1		2964265020	Indicator
915B			1	2964265040	Indicator
915S		2		9510901020	Label

REF. DESIG.	Q'TY U	C	E	PART NO.	DESCRIPTION
918B	1		1	2578861010	Label
918B		1		2911861112	Label
919B		1		2911861142	Label
919B	1			2932861012	Label
920B		1		9510911010	Label
920B	1			9510911020	Label
920F			1	4113120010	Insulator
921B	1		1	9511101010	Label
921F			1	2970005010	Clamper
922B		1		2911861240	Label
922F			2	51100314S9	B.H.M. Screw, B3 x 14
922S			1	9560000042	Hang Tag
923B		1		2911861192	Label
923B			2	5110030859	B.H.M. Screw, B3 x 8
924S			1	2731821010	Silicagel
925F			2	5128030600	B.H. Tapped Screw, B3 x 6
CE01	1	1	1	EE22505040	Electrolytic Cap., 2.2μF ±20% 50V
CE02	1	1	1	EE22505040	Electrolytic Cap., 2.2μF ±20% 50V
CE05	1	1	1	EE47601040	Electrolytic Cap., 47μF 10V
CE06	1	1	1	EE47601040	Electrolytic Cap., 47μF 10V
CE07	1	1	1	DD11050010	Ceramic Cap., 5pF 50V
CE08	1	1	1	DD11050010	Ceramic Cap., 5pF 50V
CE09	1	1	1	DD11050010	Ceramic Cap., 5pF 50V
CE10	1	1	1	DD11050010	Ceramic Cap., 5pF 50V
CE11	1	1	1	EA10701090	Electrolytic Cap., 100μF 10V
CE12	1	1	1	EA10701090	Electrolytic Cap., 100μF 10V
CE13	1	1	1	EE33505040	Electrolytic Cap., 3.3μF ±20% 50V
CE14	1	1	1	EE33505040	Electrolytic Cap., 3.3μF ±20% 50V
CE15	1	1	1	DF16474510	Film Cap., 0.47μF ±10% 100V
CE16	1	1	1	DF16474510	Film Cap., 0.47μF ±10% 100V
CE17	1	1	1	DD15200010	Ceramic Cap., 20pF ±5% 50V
CE18	1	1	1	DD15200010	Ceramic Cap., 20pF ±5% 50V
CE19	1	1	1	DD11050010	Ceramic Cap., 5pF 50V
CE20	1	1	1	DD11050010	Ceramic Cap., 5pF 50V
CE21	1	1	1	EE33505040	Electrolytic Cap., 3.3μF ±20% 50V
CE22	1	1	1	EE33505040	Electrolytic Cap., 3.3μF ±20% 50V
CE23	1	1	1	EA10703590	Electrolytic Cap., 100μF 35V
CE24	1	1	1	EA10703590	Electrolytic Cap., 100μF 35V
QE01	1	1	1	HT108412A0	Transistor, 2SA841 (GR or BL)
QE02	1	1	1	HT108412A0	Transistor, 2SA841 (GR or BL)
QE03	1	1	1	HT108412A0	Transistor, 2SA841 (GR or BL)
QE04	1	1	1	HT108412A0	Transistor, 2SA841 (GR or BL)
QE05	1	1	1	HT316812A0	Transistor, 2SC1681 (GR or BL)
QE06	1	1	1	HT316812A0	Transistor, 2SC1681 (GR or BL)
QE07	1	1	1	HT108412A0	Transistor, 2SA841 (GR or BL)
QE08	1	1	1	HT108412A0	Transistor, 2SA841 (GR or BL)
QE09	1	1	1	HT108412A0	Transistor, 2SA841 (GR or BL)
QE10	1	1	1	HT108412A0	Transistor, 2SA841 (GR or BL)
QE11	1	1	1	HT316812A0	Transistor, 2SC1681 (GR or BL)
QE12	1	1	1	HT316812A0	Transistor, 2SC1681 (GR or BL)
RE01	1	1	1	RT05105140	Resistor, 1MΩ ±5% ¼W
RE02	1	1	1	RT05105140	Resistor, 1MΩ ±5% ¼W
RE03	1	1	1	RT05102140	Resistor, 1kΩ ±5% ¼W
RE04	1	1	1	RT05102140	Resistor, 1kΩ ±5% ¼W
RE05	1	1	1	RT05223140	Resistor, 22kΩ ±5% ¼W
RE06	1	1	1	RT05223140	Resistor, 22kΩ ±5% ¼W

- (U) for U.S.A.
- (C) for Canada
- (E) for Europe

REF. DESIG.	Q'TY U	C	E	PART NO.	DESCRIPTION
RE07	1	1	1	RT05823140	Resistor, 82kΩ ±5% ¼W
RE08	1	1	1	RT05823140	Resistor, 82kΩ ±5% ¼W
RE09	1	1	1	RT05153140	Resistor, 15kΩ ±5% ¼W
RE10	1	1	1	RT05153140	Resistor, 15kΩ ±5% ¼W
RE11	1	1	1	RT05124140	Resistor, 120kΩ ±5% ¼W
RE12	1	1	1	RT05124140	Resistor, 120kΩ ±5% ¼W
RE13	1	1	1	RT05392140	Resistor, 3.9kΩ ±5% ¼W
RE14	1	1	1	RT05392140	Resistor, 3.9kΩ ±5% ¼W
RE15	1	1	1	RT05471140	Resistor, 470Ω ±5% ¼W
RE16	1	1	1	RT05471140	Resistor, 470Ω ±5% ¼W
RE17	1	1	1	RT05474140	Resistor, 470kΩ ±5% ¼W
RE18	1	1	1	RT05474140	Resistor, 470kΩ ±5% ¼W
RE19	1	1	1	RT05102140	Resistor, 1kΩ ±5% ¼W
RE20	1	1	1	RT05102140	Resistor, 1kΩ ±5% ¼W
RE21	1	1	1	RT05105140	Resistor, 1MΩ ±5% ¼W
RE22	1	1	1	RT05105140	Resistor, 1MΩ ±5% ¼W
RE23	1	1	1	RT05154140	Resistor, 150kΩ ±5% ¼W
RE24	1	1	1	RT05154140	Resistor, 150kΩ ±5% ¼W
RE25	1	1	1	RT05123140	Resistor, 12kΩ ±5% ¼W
RE26	1	1	1	RT05123140	Resistor, 12kΩ ±5% ¼W
RE27	1	1	1	RT05392140	Resistor, 3.9kΩ ±5% ¼W
RE28	1	1	1	RT05392140	Resistor, 3.9kΩ ±5% ¼W
RE29	1	1	1	RT05330140	Resistor, 33Ω ±5% ¼W
RE30	1	1	1	RT05330140	Resistor, 33Ω ±5% ¼W
RE31	1	1	1	RT05474140	Resistor, 470kΩ ±5% ¼W
RE32	1	1	1	RT05474140	Resistor, 470kΩ ±5% ¼W
RE33	1	1	1	GJ05821010	Resistor, 820Ω ±5% 1W
RE34	1	1	1	GJ05821010	Resistor, 820Ω ±5% 1W
CH01	1	1	1	DF15104010	Film Cap., 0.1μF ±5% 50V
CH02	1	1	1	DF15104010	Film Cap., 0.1μF ±5% 50V
CH03	1	1	1	DF15104010	Film Cap., 0.1μF ±5% 50V
CH04	1	1	1	DF15104010	Film Cap., 0.1μF ±5% 50V
CH05	1	1	1	DF15104010	Film Cap., 0.1μF ±5% 50V
CH06	1	1	1	DF15104010	Film Cap., 0.1μF ±5% 50V
CH07	1	1	1	DF15152010	Film Cap., 1500pF ±5% 50V
CH08	1	1	1	DF15152010	Film Cap., 1500pF ±5% 50V
CH09	1	1	1	DF15222010	Film Cap., 2200pF ±5% 50V
CH10	1	1	1	DF15222010	Film Cap., 2200pF ±5% 50V
CH11	1	1	1	DF65391010	Film Cap., 390pF ±5% 50V
CH12	1	1	1	DF65391010	Film Cap., 390pF ±5% 50V
CH13	1	1	1	DF17224010	Film Cap., 0.22μF ±20% 50V
CH14	1	1	1	DF17224010	Film Cap., 0.22μF ±20% 50V
CH15	1	1	1	DD11050010	Ceramic Cap., 5pF ±0.5pF 50V
CH16	1	1	1	DD11050010	Ceramic Cap., 5pF ±0.5pF 50V
CH17	1	1	1	EE10605040	Electrolytic Cap., 10μF ±20% 50V
CH18	1	1	1	EE10605040	Electrolytic Cap., 10μF ±20% 50V
CH19	1	1	1	DD15101020	Ceramic Cap., 100pF ±5% 50V
CH20	1	1	1	DD15101020	Ceramic Cap., 100pF ±5% 50V
CH21	1	1	1	EA47603590	Electrolytic Cap., 47μF 35V
CH22	1	1	1	EA47603590	Electrolytic Cap., 47μF 35V
JH01	1	1	1	YP06000400	Plug, 10P Amp.
JH02	1	1	1	YP06001050	Plug, 5P
					PH00 FILTER BOARD
PH00	1	1	1	YK29640310	P.W. Board
	1	1	1	ZZ29640310	P.W. Board Assembly

REF. DESIG.	Q'TY U	C	E	PART NO.	DESCRIPTION
QH01	1	1	1	HT108412A0	Transistor, 2SA841 (GR or BL)
QH02	1	1	1	HT108412A0	Transistor, 2SA841 (GR or BL)
QH03	1	1	1	HT316812A0	Transistor, 2SC1681 (GR or BL)
QH04	1	1	1	HT316812A0	Transistor, 2SC1681 (GR or BL)
QH05	1	1	1	HT316812A0	Transistor, 2SC1681 (GR or BL)
QH06	1	1	1	HT316812A0	Transistor, 2SC1681 (GR or BL)
RH01	1	1	1	RT05334140	Resistor, 330kΩ ±5% ¼W
RH02	1	1	1	RT05334140	Resistor, 330kΩ ±5% ¼W
RH03	1	1	1	RT05244140	Resistor, 240kΩ ±5% ¼W
RH04	1	1	1	RT05244140	Resistor, 240kΩ ±5% ¼W
RH05	1	1	1	RT05513140	Resistor, 51kΩ ±5% ¼W
RH06	1	1	1	RT05513140	Resistor, 51kΩ ±5% ¼W
RH07	1	1	1	RT05113140	Resistor, 11kΩ ±5% ¼W
RH08	1	1	1	RT05113140	Resistor, 11kΩ ±5% ¼W
RH09	1	1	1	RT05113140	Resistor, 11kΩ ±5% ¼W
RH10	1	1	1	RT05113140	Resistor, 11kΩ ±5% ¼W
RH11	1	1	1	RT05113140	Resistor, 11kΩ ±5% ¼W
RH12	1	1	1	RT05113140	Resistor, 11kΩ ±5% ¼W
RH13	1	1	1	RT05115140	Resistor, 1.1MΩ ±5% ¼W
RH14	1	1	1	RT05115140	Resistor, 1.1MΩ ±5% ¼W
RH15	1	1	1	RT05102140	Resistor, 1kΩ ±5% ¼W
RH16	1	1	1	RT05102140	Resistor, 1kΩ ±5% ¼W
RH17	1	1	1	RT05103140	Resistor, 10kΩ ±5% ¼W
RH18	1	1	1	RT05103140	Resistor, 10kΩ ±5% ¼W
RH19	1	1	1	RT05682140	Resistor, 6.8kΩ ±5% ¼W
RH20	1	1	1	RT05682140	Resistor, 6.8kΩ ±5% ¼W
RH21	1	1	1	RT05102140	Resistor, 1kΩ ±5% ¼W
RH22	1	1	1	RT05102140	Resistor, 1kΩ ±5% ¼W
RH23	1	1	1	RT05224140	Resistor, 220kΩ ±5% ¼W
RH24	1	1	1	RT05224140	Resistor, 220kΩ ±5% ¼W
RH25	1	1	1	RT05221140	Resistor, 220Ω ±5% ¼W
RH26	1	1	1	RT05221140	Resistor, 220Ω ±5% ¼W
RH27	1	1	1	GF05182120	Resistor, 1.8kΩ ±5% ½W
RH28	1	1	1	GF05182120	Resistor, 1.8kΩ ±5% ½W
RH29	1	1	1	RT05103140	Resistor, 10kΩ ±5% ¼W
RH30	1	1	1	RT05103140	Resistor, 10kΩ ±5% ¼W
RH31	1	1	1	RT05124140	Resistor, 120kΩ ±5% ¼W
RH32	1	1	1	RT05124140	Resistor, 120kΩ ±5% ¼W
JJ01	1	1	1	YP06000400	Plug, 10P Amp.
JJ02	1	1	1	YP06000400	Plug, 10P Amp.
JJ03	1	1	1	YP06001050	Plug, 5P
JJ04	1	1	1	YP06000340	Plug, 4P Amp.
JJ05	1	1	1	YP06000400	Plug, 10P Amp.
JJ06	1	1	1	YP06001040	Plug, 3P
JJ07	1	1	1	YP06001040	Plug, 3P
					PJ00 PRE AMP. BOARD
PJ00	1	1	1	YG29640010	P.W. Board
	1	1	1	ZZ29640010	P.W. Board Assembly
SJ01	1	1	1	SR08050360	Rotary Switch, Selector
SJ02	1	1	1	SR04030160	Rotary Switch, Tape Copy
SJ03	1	1	1	SR04030160	Rotary Switch, Tape Monitor
CN01	1	1	1	DK18103510	Ceramic Cap., 0.01μF 500V
CN02	1	1	1	DK18103510	Ceramic Cap., 0.01μF 500V
CN03	1	1	1	EA10605090	Electrolytic Cap., 10μF 50V
CN04	1	1	1	EA47601690	Electrolytic Cap., 47μF 16V
CN05	1	1	1	EA22701690	Electrolytic Cap., 220μF 16V

- (U) for U.S.A.
- (C) for Canada
- (E) for Europe

REF. DESIG.	Q'TY U	C	E	PART NO.	DESCRIPTION
FN01			1	FS10160800	Fuse, 1.6A
FN02			1	FS10160800	Fuse, 1.6A
JN01 ≀ JN10	10	10	10	YP10001130	Plug
JN11 ≀ JN16			6	YP10001130	Plug
JN17 ≀ JN20			4	YJ08000200	Jack, Fuse Holder
LN01	1	1	1	LY40240050	Relay 24V FRL-264
					PN00 SPKR. PROTECTOR
PN00	1	1	1	YK29640320	P.W. Board
	1	1		ZZ29640320	P.W. Board Assembly
			1	ZZ29648320	P.W. Board Assembly
QN01	1	1	1	HD20011030	Diode, DS-131B
QN02	1	1	1	HD20005010	Diode, W06B
QN03	1	1	1	HT309452A0	Transistor, 2SC945 (Q or R)
QN04	1	1	1	HT309452A0	Transistor, 2SC945 (Q or R)
QN05	1	1	1	HT313182R0	Transistor, 2SC1318 (R or S)
RN01	1	1	1	GJ05121010	Resistor, 120Ω ±5% 1W
RN02	1	1	1	GJ05102010	Resistor, 1kΩ ±5% 1W
RN03	1	1	1	GD05682140	Resistor, 6.8kΩ ±5% ¼W
RN04	1	1	1	GD05273140	Resistor, 27kΩ ±5% ¼W
RN05	1	1	1	GD05223140	Resistor, 22kΩ ±5% ¼W
RN06	1	1	1	GD05184140	Resistor, 180kΩ ±5% ¼W
RN07	1	1	1	GJ05181010	Resistor, 180Ω ±5% 1W
RN08	1	1	1	GD05560140	Resistor, 56Ω ±5% ¼W
RN09	1	1	1	GU05562120	Resistor, 5.6kΩ ±5% ½W
RN10	1	1	1	GU05562120	Resistor, 5.6kΩ ±5% ½W
RN11	1	1	1	GD05474140	Resistor, 470kΩ ±5% ¼W
CS01	1	1	1	DF15104010	Film Cap., 0.1μF ±5% 50V
CS02	1	1	1	DF15104010	Film Cap., 0.1μF ±5% 50V
CS03	1	1	1	DF15222010	Film Cap., 2200pF ±5% 50V
CS04	1	1	1	DF15222010	Film Cap., 2200pF ±5% 50V
CS05	1	1	1	DF15153010	Film Cap., 0.015μF ±5% 50V
CS06	1	1	1	DF15153010	Film Cap., 0.015μF ±5% 50V
CS07	1	1	1	DF15153010	Film Cap., 0.015μF ±5% 50V
CS08	1	1	1	DF15153010	Film Cap., 0.015μF ±5% 50V
CS09	1	1	1	DF15682010	Film Cap., 6800pF ±5% 50V
CS10	1	1	1	DF15682010	Film Cap., 6800pF ±5% 50V
CS11	1	1	1	DF65391010	Film Cap., 390pF ±5% 50V
CS12	1	1	1	DF65391010	Film Cap., 390pF ±5% 50V
CS13	1	1	1	DF15822010	Film Cap., 8200pF ±5% 50V
CS14	1	1	1	DF15822010	Film Cap., 8200pF ±5% 50V
CS15	1	1	1	DD15101020	Ceramic Cap., 100pF ±5% 50V
CS16	1	1	1	DD15101020	Ceramic Cap., 100pF ±5% 50V
CS17	1	1	1	DF15103010	Film Cap., 0.01μF ±5% 50V
CS18	1	1	1	DF15103010	Film Cap., 0.01μF ±5% 50V
CS19	1	1	1	DF15103010	Film Cap., 0.01μF ±5% 50V
CS20	1	1	1	DF15103010	Film Cap., 0.01μF ±5% 50V
CS21	1	1	1	DF15683010	Film Cap., 0.068μF ±5% 50V
CS22	1	1	1	DF15683010	Film Cap., 0.068μF ±5% 50V
CS23	1	1	1	DF15683010	Film Cap., 0.068μF ±5% 50V
CS24	1	1	1	DF15683010	Film Cap., 0.068μF ±5% 50V

REF. DESIG.	Q'TY U	C	E	PART NO.	DESCRIPTION
CS25	1	1	1	DF15182010	Film Cap., 1800pF ±5% 50V
CS26	1	1	1	DF15182010	Film Cap., 1800pF ±5% 50V
JS01	1	1	1	YJ06000400	Jack, 10P Connector (Amp.)
JS02	1	1	1	YJ06000400	Jack, 10P Connector (Amp.)
JS03	1	1	1	YJ06000340	Jack, 4P Connector (Amp.)
JS05 ≀ JS18	14	14	14	YP10001130	Plug
					PS00 FRONT PANEL BOARD
PS00	1	1	1	YD29702020	P.W. Board
	1	1	1	ZZ29642020	P.W. Board Assembly
RS01	1	1	1	RT05102140	Resistor, 1kΩ ±5% ¼W
RS02	1	1	1	RT05102140	Resistor, 1kΩ ±5% ¼W
RS03	1	1	1	RT05332140	Resistor, 3.3kΩ ±5% ¼W
RS04	1	1	1	RT05332140	Resistor, 3.3kΩ ±5% ¼W
RS05	1	1	1	RT05183140	Resistor, 18kΩ ±5% ¼W
RS06	1	1	1	RT05183140	Resistor, 18kΩ ±5% ¼W
RS07	1	1	1	RS05030320	Variable Resistor, 50kΩ x 2 Balance
RS08	1	1	1	RG05030040	Variable Resistor, 50kΩA x 2
RS09	1	1	1	RM05030670	Variable Resistor, 50kΩB x 2 Volume
RS11	1	1	1	RT05183140	Resistor, 18kΩ ±5% ¼W
RS12	1	1	1	RT05183140	Resistor, 18kΩ ±5% ¼W
RS13	1	1	1	RT05183140	Resistor, 18kΩ ±5% ¼W
RS14	1	1	1	RT05183140	Resistor, 18kΩ ±5% ¼W
RS15	1	1	1	RT05562140	Resistor, 5.6kΩ ±5% ¼W
RS16	1	1	1	RT05562140	Resistor, 5.6kΩ ±5% ¼W
RS17	1	1	1	RT05562140	Resistor, 5.6kΩ ±5% ¼W
RS18	1	1	1	RT05562140	Resistor, 5.6kΩ ±5% ¼W
RS19	1	1	1	RT05562140	Resistor, 5.6kΩ ±5% ¼W
RS20	1	1	1	RT05562140	Resistor, 5.6kΩ ±5% ¼W
RS21	1	1	1	RT05562140	Resistor, 5.6kΩ ±5% ¼W
RS22	1	1	1	RT05562140	Resistor, 5.6kΩ ±5% ¼W
RS23	1	1	1	RT05273140	Resistor, 27kΩ ±5% ¼W
RS24	1	1	1	RT05273140	Resistor, 27kΩ ±5% ¼W
RS25	1	1	1	RT05273140	Resistor, 27kΩ ±5% ¼W
RS26	1	1	1	RT05273140	Resistor, 27kΩ ±5% ¼W
RS27	1	1	1	RT05392140	Resistor, 3.9kΩ ±5% ¼W
RS28	1	1	1	RT05392140	Resistor, 3.9kΩ ±5% ¼W
RS29	1	1	1	RT05274140	Resistor, 270kΩ ±5% ¼W
RS30	1	1	1	RT05274140	Resistor, 270kΩ ±5% ¼W
RS31	1	1	1	RS01040040	Variable Resistor, 100kΩB x 2 Bass
RS32	1	1	1	RS01040040	Variable Resistor, 100kΩB x 2 Mid
RS33	1	1	1	RS01040040	Variable Resistor, 100kΩB x 2 Treble
RS35	1	1	1	RT05100140	Resistor, 10Ω ±5% ¼W
RS36	1	1	1	RT05100140	Resistor, 10Ω ±5% ¼W
RS37	1	1	1	RT05684140	Resistor, 680kΩ ±5% ¼W
RS38	1	1	1	RT05684140	Resistor, 680kΩ ±5% ¼W
RS39	1	1	1	RT05684140	Resistor, 680kΩ ±5% ¼W
RS40	1	1	1	RT05684140	Resistor, 680kΩ ±5% ¼W
RS41	1	1	1	RT05105140	Resistor, 1MΩ ±5% ¼W
RS42	1	1	1	RT05105140	Resistor, 1MΩ ±5% ¼W
RS43	1	1	1	RT05182140	Resistor, 1.8kΩ ±5% ¼W
RS44	1	1	1	RT05182140	Resistor, 1.8kΩ ±5% ¼W
RS45	1	1	1	RT05153140	Resistor, 15kΩ ±5% ¼W
RS46	1	1	1	RT05153140	Resistor, 15kΩ ±5% ¼W
RS47	1	1	1	RT05100140	Resistor, 10Ω ±5% ¼W

- (U) for U.S.A.
- (C) for Canada
- (E) for Europe

REF. DESIG.	Q'TY U	C	E	PART NO.	DESCRIPTION
RS48	1	1	1	RT05100140	Resistor, 10Ω ±5% ¼W
SS01	1	1	1	SR04050100	Rotary Switch
SS02	1	1	1	SP04040170	Pushswitch
SS03	1	1	1	SP04010210	Pushswitch
SS04	1	1	1	SP04010210	Pushswitch
CT01	1	1	1	DF16103010	Film Cap., 0.01μF ±10% 50V
CT02	1	1	1	DF16103010	Film Cap., 0.01μF ±10% 50V
CT03	1	1	1	DF16103010	Film Cap., 0.01μF ±10% 50V
CT04	1	1	1	DF16103010	Film Cap., 0.01μF ±10% 50V
CT09	1	1	1	EA10601690	Electrolytic Cap., 10μF 16V
CT10	1	1	1	EA10601690	Electrolytic Cap., 10μF 16V
CT11	1	1	1	EA10601690	Electrolytic Cap., 10μF 16V
CT12	1	1	1	EA10601690	Electrolytic Cap., 10μF 16V
QT01	1	1	1	HT309452A0	Transistor, 2SC945 (Q or R)
QT02	1	1	1	HT309452A0	Transistor, 2SC945 (Q or R)
QT03	1	1	1	HT107332A0	Transistor, 2SA733 (Q or R)
QT04	1	1	1	HT107332A0	Transistor, 2SA733 (Q or R)
QT05	1	1	1	HD20011050	Diode, 1S1555
QT06	1	1	1	HD20011050	Diode, 1S1555
QT07	1	1	1	HD20011050	Diode, 1S1555
QT08	1	1	1	HD20011050	Diode, 1S1555
QT09	1	1	1	HD20011050	Diode, 1S1555
QT10	1	1	1	HD20011050	Diode, 1S1555
QT11	1	1	1	HD20011050	Diode, 1S1555
QT12	1	1	1	HD20011050	Diode, 1S1555
QT13	1	1	1	HD20003210	Diode, 1S2471
QT14	1	1	1	HD20003210	Diode, 1S2471
QT15	1	1	1	HD20003210	Diode, 1S2471
QT16	1	1	1	HD20003210	Diode, 1S2471
RT05	1	1	1	GU05332120	Resistor, 3.3kΩ ±5% ½W
RT06	1	1	1	GU05332120	Resistor, 3.3kΩ ±5% ½W
RT07	1	1	1	GU05332120	Resistor, 3.3kΩ ±5% ½W
RT08	1	1	1	GU05332120	Resistor, 3.3kΩ ±5% ½W
RT09	1	1	1	GU05432120	Resistor, 4.3kΩ ±5% ½W
RT10	1	1	1	GU05432120	Resistor, 4.3kΩ ±5% ½W
RT11	1	1	1	GD05201140	Resistor, 200Ω ±5% ¼W
RT12	1	1	1	GD05201140	Resistor, 200Ω ±5% ¼W
RT13	1	1	1	GD05201140	Resistor, 200Ω ±5% ¼W
RT14	1	1	1	GD05201140	Resistor, 200Ω ±5% ¼W
RT15	1	1	1	GD05201140	Resistor, 200Ω ±5% ¼W
RT16	1	1	1	GD05201140	Resistor, 200Ω ±5% ¼W
RT17	1	1	1	GD05201140	Resistor, 200Ω ±5% ¼W
RT18	1	1	1	GD05201140	Resistor, 200Ω ±5% ¼W
RT19	1	1	1	GD05820140	Resistor, 82Ω ±5% ¼W
RT20	1	1	1	GD05820140	Resistor, 82Ω ±5% ¼W
RT21	1	1	1	GD05820140	Resistor, 82Ω ±5% ¼W
RT22	1	1	1	GD05820140	Resistor, 82Ω ±5% ¼W
CV01	1	1	1	DK18203010	Ceramic Cap., 0.02μF 50V
CV02	1	1	1	DK18203010	Ceramic Cap., 0.02μF 50V

REF. DESIG.	Q'TY U	C	E	PART NO.	DESCRIPTION
CV03	1	1	1	DK18203010	Ceramic Cap., 0.02μF 50V
CV04	1	1	1	DF17104010	Film Cap., 0.11μF 50V
JV01	1	1	1	YT02040150	Terminal, 4P RCA Pin Jack
JV02	1	1	1	YT02040150	Terminal, 4P RCA Pin Jack
JV03			1	BY01050060	Jack, RCA Pin Jack (DIN)
JV03	1	1		YT02040150	Terminal, 4P RCA Pin Jack
JV04			1	BY01050060	Jack, RCA Pin Jack (DIN)
JV04	1	1		YT02040150	Terminal, 4P RCA Pin Jack
JV05	1	1	1	YJ06000400	Jack, 10P Amp. Jack
JV06	1	1	1	YJ06000400	Jack, 10P Amp. Jack
JV07 ~ JV15	9	9	9	YP10001130	Plug
JV16	1	1	1	YT02040210	Terminal, 4P RCA Jack
JV17	1	1	1	YP10001130	Plug
JV18	1	1	1	YP10001130	Plug
					PV00 REAR PANEL BOARD
PV00	1	1	1	YF29640010	P.W. Board
	1	1		ZZ29641010	P.W. Board Assembly
			1	ZZ29648010	P.W. Board Assembly
RV01			1	RT05394140	Resistor, 390kΩ ±5% ¼W
RV02			1	RT05394140	Resistor, 390kΩ ±5% ¼W
RV03			1	RT05394140	Resistor, 390kΩ ±5% ¼W
RV04			1	RT05394140	Resistor, 390kΩ ±5% ¼W
RV05			1	RT05104140	Resistor, 100kΩ ±5% ¼W
RV06			1	RT05104140	Resistor, 100kΩ ±5% ¼W
RV07			1	RT05104140	Resistor, 100kΩ ±5% ¼W
RV08			1	RT05104140	Resistor, 100kΩ ±5% ¼W
JW01	1	1	1	YJ01000860	Jack, Headphone
JW02 ~ JW08	7	7	7	YP10001130	Plug
					PW00 HEADPHONE BOARD
PW00	1	1	1	YF29640020	P.W. Board
	1	1	1	ZZ29641020	P.W. Board Assembly
RW01	1	1	1	GJ05331010	Resistor, 330Ω ±5% 1W
RW02	1	1	1	GJ05331010	Resistor, 330Ω ±5% 1W
RW03	1	1	1	GJ05151010	Resistor, 150Ω ±5% 1W
RW04	1	1	1	GJ05151010	Resistor, 150Ω ±5% 1W
SW01	1	1	1	SP04020210	Pushswitch
C001			1	DO07473540	Oil-Paper Cap., ECN-C4A SEMKO
C002			1	BF33300010	Cap.Comp.,0.033μF+120Ω AC 250WV
C003	1	1	1	EI18905510	Electrolytic Cap., 18000μFx2 55V
C004	1	1	1	DF17104520	Film Cap., 0.1μF ±20% 200V
C005	1	1	1	DF17104520	Film Cap., 0.1μF ±20% 200V
C006	1	1	1	EQ10601610	Electrolytic Cap., 10μF ±10% 16V
C007	1	1	1	EQ10601610	Electrolytic Cap., 10μF ±10% 16V
F001			1	FS10315800	Fuse, 3.15A
F001	1	1		FS10500040	Fuse, 5A UL MGC
F002		1		FS20500010	Fuse, 5A
G001	1			BF10400040	Cap. Comp.
G001		1		BF33300020	Cap. Comp. 0.033μF + 120ΩECQ-JC
J001	1	1	1	YJ01001010	Jack, MIC JACK
J002	1	1	1	YJ01001010	Jack, MIC
J004	1	1	1	YT01010050	Terminal, GND

- (U) for U.S.A.
- (C) for Canada
- (E) for Europe

REF. DESIG.	Q'TY U	C	E	PART NO.	DESCRIPTION
J005	1	1	1	YT03040160	Terminal, Speaker
J006	1	1	1	YT03040160	Terminal, Speaker
J007	1	1		YJ04000560	Jack, AC Outlet
J008	1	1		YJ04000560	Jack, AC Outlet
J009	1	1		YJ04000560	Jack, AC Outlet
J010	1	1		YJ04000560	Jack, AC Outlet
J011 ≀ J018	8	8	8	YJ05000220	Jack,
J019	1	1	1	YJ05000250	Jack, LED Socket
J020	1	1	1	YJ06001040	Jack, 3P
J021	1	1	1	YJ06001050	Jack
J022	1	1	1	YJ06001040	Jack, 3P
J023	1	1	1	YJ06001450	Jack, 6P
J024	1	1	1	YJ06001050	Jack, 5P
J025	1	1	1	YJ06001040	Jack, 3P
J026			1	YJ08000220	Jack, Fuse Holder (20mm)
J026	1	1		YJ08000230	Jack, Fuse Holder
J027			1	BY03110010	Plug, Voltage Selector
J028	1	1	1	YJ06001040	Jack
J029			1	YL09030010	Terminal
J030			1	YL01070010	Terminal
L001	1	1		TS61406010	Power Transformer
L001			1	TS61406020	Power Transformer
Q001	1	1	1	HT404272A0	Transistor, 2SD427 (R or O)
Q002	1	1	1	HT205572A0	Transistor, 2SB557 (R or O)
Q003	1	1	1	HT404272A0	Transistor, 2SD427 (R or O)
Q004	1	1	1	HT205572A0	Transistor, 2SB557 (R or O)
Q005	1	1	1	HT404272A0	Transistor, 2SD427 (R or O)
Q006	1	1	1	HT205572A0	Transistor, 2SB557 (R or O)
Q007	1	1	1	HT404272A0	Transistor, 2SD427 (R or O)
Q008	1	1	1	HT205572A0	Transistor, 2SB557 (R or O)
Q009	1	1	1	HD20004290	Diode, S5VB-20
Q010	1	1	1	HI10004030	L.E.D., 132B
R001	1	1	1	GS10222030	Resistor, 2.2kΩ ±10% 3W
R002	1	1	1	GS10222030	Resistor, 2.2kΩ ±10% 3W
S001			1	SP02010250	Pushswitch, SDG-5P SEMKO
S001	1	1		SP02020210	Pushswitch, Power TV-5
S002	1	1	1	SS02020380	Slide Switch, AC/DC Coupling
W001			1	YC01900030	A.C. Power Cord
W001	1	1		YC02400170	A.C. Power Cord
C401	1	1	1	EE47505040	Electrolytic Cap., 4.7μF ±20% 50V
C402	1	1	1	EE47505040	Electrolytic Cap., 4.7μF ±20% 50V
C405	1	1	1	DD15390010	Ceramic Cap., 39pF ±5% 50V
C406	1	1	1	DD15390010	Ceramic Cap., 39pF ±5% 50V
C407	1	1	1	DD15200010	Ceramic Cap., 20pF ±5% 50V
C408	1	1	1	DD15200010	Ceramic Cap., 20pF ±5% 50V
C409	1	1	1	DD15101020	Ceramic Cap., 100pF ±5% 50V
C410	1	1	1	DD15101020	Ceramic Cap., 100pF ±5% 50V
C411	1	1	1	DD15101020	Ceramic Cap., 100pF ±5% 50V
C412	1	1	1	DD15101020	Ceramic Cap., 100pF ±5% 50V
C413	1	1	1	EE10701640	Electrolytic Cap., 100μF ±20% 16V
C414	1	1	1	EE10701640	Electrolytic Cap., 100μF ±20% 16V
C415	1	1	1	DF65101010	Film Cap., 100pF ±5% 50V
C416	1	1	1	DF65101010	Film Cap., 100pF ±5% 50V
C417	1	1	1	DD11050010	Ceramic Cap., 5pF 50V
C418	1	1	1	DD11050010	Ceramic Cap., 5pF 50V

REF. DESIG.	Q'TY U	C	E	PART NO.	DESCRIPTION
C419	1	1	1	EE47505040	Electrolytic Cap., 4.7μF ±20% 50V
C420	1	1	1	EE47505040	Electrolytic Cap., 4.7μF ±20% 50V
C423	1	1	1	DF65681010	Film Cap., 680pF ±5% 50V
C424	1	1	1	DF65681010	Film Cap., 680pF ±5% 50V
C425	1	1	1	DF14112010	Film Cap., 1100pF ±2% 50V
C426	1	1	1	DF14112010	Film Cap., 1100pF ±2% 50V
C427	1	1	1	DF14362010	Film Cap., 3600pF ±2% 50V
C428	1	1	1	DF14362010	Film Cap., 3600pF ±2% 50V
C429	1	1	1	EE10505040	Electrolytic Cap., 1μF ±20% 50V
C430	1	1	1	EE10505040	Electrolytic Cap., 1μF ±20% 50V
C431	1	1	1	DD15300010	Ceramic Cap., 30pF ±5% 50V
C432	1	1	1	DD15300010	Ceramic Cap., 30pF ±5% 50V
C433	1	1	1	EA10603590	Electrolytic Cap., 10μF 35V
C434	1	1	1	EA10603590	Electrolytic Cap., 10μF 35V
C435	1	1	1	EA47605090	Electrolytic Cap., 47μF 50V
C436	1	1	1	EA47605090	Electrolytic Cap., 47μF 50V
C437	1	1	1	DD15201010	Ceramic Cap., 200pF ±5% 50V
C438	1	1	1	DD15201010	Ceramic Cap., 200pF ±5% 50V
Q401	1	1	1	HT108722D0	Transistor, 2SA872A (D or E)
Q402	1	1	1	HT108722D0	Transistor, 2SA872A (D or E)
Q403	1	1	1	HT108722D0	Transistor, 2SA872A (D or E)
Q404	1	1	1	HT108722D0	Transistor, 2SA872A (D or E)
Q405	1	1	1	HT317752E0	Transistor, 2SC1775A (E or F)
Q406	1	1	1	HT317752E0	Transistor, 2SC1775A (E or F)
Q407	1	1	1	HT318852C0	Transistor, 2SC1885 (R or S)
Q408	1	1	1	HT109122C0	Transistor, 2SA912 (R or S)
Q409	1	1	1	HT318852C0	Transistor, 2SC1885 (R or S)
Q410	1	1	1	HT109122C0	Transistor, 2SA912 (R or S)
R401	1	1	1	RT05513140	Resistor, 51kΩ ±5% ¼W
R402	1	1	1	RT05513140	Resistor, 51kΩ ±5% ¼W
R403	1	1	1	RT05105140	Resistor, 1MΩ ±5% ¼W
R404	1	1	1	RT05105140	Resistor, 1MΩ ±5% ¼W
R405	1	1	1	RT05102140	Resistor, 1kΩ ±5% ¼W
R406	1	1	1	RT05102140	Resistor, 1kΩ ±5% ¼W
R407	1	1	1	RT05303140	Resistor, 30kΩ ±5% ¼W
R408	1	1	1	RT05303140	Resistor, 30kΩ ±5% ¼W
R409	1	1	1	RT05394140	Resistor, 390kΩ ±5% ¼W
R410	1	1	1	RT05394140	Resistor, 390kΩ ±5% ¼W
R411	1	1	1	RT02821140	Resistor, 820Ω ±2% ¼W
R412	1	1	1	RT02821140	Resistor, 820Ω ±2% ¼W
R413	1	1	1	RT02914140	Resistor, 910kΩ ±2% ¼W
R414	1	1	1	RT02914140	Resistor, 910kΩ ±2% ¼W
R415	1	1	1	RT02513140	Resistor, 51kΩ ±2% ¼W
R416	1	1	1	RT02513140	Resistor, 51kΩ ±2% ¼W
R417	1	1	1	RT05332140	Resistor, 3.3kΩ ±5% ¼W
R418	1	1	1	RT05332140	Resistor, 3.3kΩ ±5% ¼W
R419	1	1	1	RT05222140	Resistor, 2.2kΩ ±5% ¼W
R420	1	1	1	RT05222140	Resistor, 2.2kΩ ±5% ¼W
R421	1	1	1	RT05224140	Resistor, 220kΩ ±5% ¼W
R422	1	1	1	RT05224140	Resistor, 220kΩ ±5% ¼W
R423	1	1	1	RT05330140	Resistor, 33Ω ±5% ¼W
R424	1	1	1	RT05330140	Resistor, 33Ω ±5% ¼W
R425	1	1	1	RT05330140	Resistor, 33Ω ±5% ¼W
R426	1	1	1	RT05330140	Resistor, 33Ω ±5% ¼W
R427	1	1	1	RT05681140	Resistor, 680Ω ±5% ¼W
R428	1	1	1	RT05681140	Resistor, 680Ω ±5% ¼W
R429	1	1	1	RT05221140	Resistor, 220Ω ±5% ¼W

- (U) for U.S.A.
- (C) for Canada
- (E) for Europe

REF. DESIG.	Q'TY U	C	E	PART NO.	DESCRIPTION
R430	1	1	1	RT05221140	Resistor, 220Ω ±5% ¼W
R431	1	1	1	RT05474140	Resistor, 470kΩ ±5% ¼W
R432	1	1	1	RT05474140	Resistor, 470kΩ ±5% ¼W
R433	1	1	1	RT05683140	Resistor, 68kΩ ±5% ¼W
R434	1	1	1	RT05683140	Resistor, 68kΩ ±5% ¼W
R435	1	1	1	RT05823140	Resistor, 82kΩ ±5% ¼W
R436	1	1	1	RT05823140	Resistor, 82kΩ ±5% ¼W
R437	1	1	1	RT05753140	Resistor, 75kΩ ±5% ¼W
R438	1	1	1	RT05753140	Resistor, 75kΩ ±5% ¼W
R439	1	1	1	GF05560120	Resistor, 56Ω ±5% ½W
R440	1	1	1	GF05560120	Resistor, 56Ω ±5% ½W
C701	1	1	1	DF65101010	Film Cap., 100pF ±5% 50V
C702	1	1	1	DF65101010	Film Cap., 100pF ±5% 50V
C703	1	1	1	DF65162010	Film Cap., 1600pF ±5% 50V
C704	1	1	1	DF65162010	Film Cap., 1600pF ±5% 50V
C705	1	1	1	DF16473010	Film Cap., 0.047μF ±10% 50V
C706	1	1	1	DF16473010	Film Cap., 0.047μF ±10% 50V
C707	1	1	1	EA22603590	Electrolytic Cap., 22μF 35V
C708	1	1	1	EA22603590	Electrolytic Cap., 22μF 35V
C709	1	1	1	DD15500500	Ceramic Cap., 50pF ±5% 500V
C710	1	1	1	DD15500500	Ceramic Cap., 50pF ±5% 500V
C711	1	1	1	DF17104540	Film Cap., 0.1μF 100V
C712	1	1	1	DF17104540	Film Cap., 0.1μF 100V
C713	1	1	1	DF17104540	Film Cap., 0.1μF 100V
C714	1	1	1	DF17104540	Film Cap., 0.1μF 100V
C715	1	1	1	EA22603590	Electrolytic Cap., 22μF 100V
C716	1	1	1	EA22603590	Electrolytic Cap., 22μF 100V
C717	1	1	1	DF65301510	Film Cap., 300pF ±5%
C718	1	1	1	DF65301510	Film Cap., 300pF ±5%
C719	1	1	1	DF65271510	Film Cap., 270pF ±5%
C720	1	1	1	DF65271510	Film Cap., 270pF ±5%
C721	1	1	1	DF16473010	Film Cap., 0.047μF ±10% 50V
C722	1	1	1	DF16473010	Film Cap., 0.047μF ±10% 50V
C723	1	1	1	EA10605090	Electrolytic Cap., 10μF 50V
C724	1	1	1	EA10605090	Electrolytic Cap., 10μF 50V
C725	1	1	1	DF17104540	Film Cap., 0.1μF 100V
C726	1	1	1	DF17104540	Film Cap., 0.1μF 100V
C727	1	1	1	DF17104540	Film Cap., 0.1μF 100V
C728	1	1	1	DF17104540	Film Cap., 0.1μF 100V
C729	1	1	1	DF17104540	Film Cap., 0.1μF 100V
C730	1	1	1	DF17104540	Film Cap., 0.1μF 100V
C731	1	1	1	EA47606390	Electrolytic Cap., 47μF 63V
C732	1	1	1	EA47606390	Electrolytic Cap., 47μF 63V
C733	1	1	1	EA47606390	Electrolytic Cap., 47μF 63V
C734	1	1	1	EA47606390	Electrolytic Cap., 47μF 63V
J701	1	1	1	YP06001040	Plug, 3P
J702	1	1	1	YP06001040	Plug, 3P
J705	1	1	1	YP06000540	Plug, 6P
L701	1	1	1	LC22620010	Choke Coil
L702	1	1	1	LC22620010	Choke Coil
					P700 MAIN AMP. BOARD
P700	1	1	1	YG29640020	P.W. Board
	1	1	1	ZZ29640020	P.W. Board Assembly
Q701	1	1	1	HC10003200	IC, 2SK109 (C or D)
Q702	1	1	1	HC10003200	IC, 2SK109 (C or D)
Q703	1	1	1	HT317752D0	Transistor, 2SC1775A (D or E)
Q704	1	1	1	HT317752D0	Transistor, 2SC1775A (D or E)

REF. DESIG.	Q'TY U	C	E	PART NO.	DESCRIPTION
Q705	1	1	1	HT317752D0	Transistor, 2SC1775A (D or E)
Q706	1	1	1	HT317752D0	Transistor, 2SC1775A (D or E)
Q707	1	1	1	HT317752D0	Transistor, 2SC1775A (D or E)
Q708	1	1	1	HT317752D0	Transistor, 2SC1775A (D or E)
Q709	1	1	1	HT108722D0	Transistor, 2SA872A (D or E)
Q710	1	1	1	HT108722D0	Transistor, 2SA872A (D or E)
Q711	1	1	1	HT108722D0	Transistor, 2SA872A (D or E)
Q712	1	1	1	HT108722D0	Transistor, 2SA872A (D or E)
Q713	1	1	1	HT108722D0	Transistor, 2SA872A (D or E)
Q714	1	1	1	HT108722D0	Transistor, 2SA872A (D or E)
Q715	1	1	1	HT317752D0	Transistor, 2SC1775A (D or E)
Q716	1	1	1	HT317752D0	Transistor, 2SC1775A (D or E)
Q717	1	1	1	HT108722E0	Transistor, 2SC872A (E or F)
Q718	1	1	1	HT108722E0	Transistor, 2SC872A (E or F)
Q719	1	1	1	HT108722E0	Transistor, 2SC872A (E or F)
Q720	1	1	1	HT108722E0	Transistor, 2SC872A (E or F)
Q721	1	1	1	HT109142B0	Transistor, 2SA914 (R or S)
Q722	1	1	1	HT109142B0	Transistor, 2SA914 (R or S)
Q723	1	1	1	HT319532B0	Transistor, 2SC1953 (R or S)
Q724	1	1	1	HT319532B0	Transistor, 2SC1953 (R or S)
Q725	1	1	1	HT319132B0	Transistor, 2SC1913 (R or S)
Q726	1	1	1	HT319132B0	Transistor, 2SC1913 (R or S)
Q727	1	1	1	HT109132B0	Transistor, 2SA913 (R or S)
Q728	1	1	1	HT109132B0	Transistor, 2SA913 (R or S)
Q729	1	1	1	HD20011050	Diode, 1S1555
Q730	1	1	1	HD20011050	Diode, 1S1555
Q731	1	1	1	HD30046090	Zener, WZ-310
Q732	1	1	1	HD30046090	Zener, WZ-310
Q733	1	1	1	HD30046090	Zener, WZ-310
Q734	1	1	1	HD30046090	Zener, WZ-310
Q735	1	1	1	HD20011050	Diode, 1S1555
Q736	1	1	1	HD20011050	Diode, 1S1555
Q737	1	1	1	HD20003210	Diode, 1S2471
Q738	1	1	1	HD20003210	Diode, 1S2471
Q739	1	1	1	HD20003210	Diode, 1S2471 (Black)
Q740	1	1	1	HD20003210	Diode, 1S2471
Q741	1	1	1	HV00004120	Varistor, MV-1
Q742	1	1	1	HV00004120	Varistor, MV-1
Q743	1	1	1	HV00004120	Varistor, MV-1
Q744	1	1	1	HV00004120	Varistor, MV-1
Q745	1	1	1	HH00007030	Thermistor, SDT-100
Q746	1	1	1	HH00007030	Thermistor, SDT-100
Q747	1	1	1	HH00007030	Thermistor, SDT-100
Q748	1	1	1	HH00007030	Thermistor, SDT-100
Q749	1	1	1	HD20005010	Diode, W06B
Q750	1	1	1	HD20005010	Diode, W06B
Q751	1	1	1	HD20005010	Diode, W06B
Q752	1	1	1	HD20005010	Diode, W06B
R701	1	1	1	GD05332140	Resistor, 3.3kΩ ±5% ¼W
R702	1	1	1	GD05332140	Resistor, 3.3kΩ ±5% ¼W
R703	1	1	1	GD05333140	Resistor, 33kΩ ±5% ¼W
R704	1	1	1	GD05333140	Resistor, 33kΩ ±5% ¼W
R705	1	1	1	GD05821140	Resistor, 820Ω ±5% ¼W
R706	1	1	1	GD05821140	Resistor, 820Ω ±5% ¼W
R707	1	1	1	GD05821140	Resistor, 820Ω ±5% ¼W
R708	1	1	1	GD05821140	Resistor, 820Ω ±5% ¼W
R709	1	1	1	GD05101140	Resistor, 100Ω ±5% ¼W

- (U) for U.S.A.
- (C) for Canada
- (E) for Europe

REF. DESIG.	Q'TY U	C	E	PART NO.	DESCRIPTION
R710	1	1	1	GD05101140	Resistor, 100Ω ±5% ¼W
R711	1	1	1	GD05513140	Resistor, 51kΩ ±5% ¼W
R712	1	1	1	GD05513140	Resistor, 51kΩ ±5% ¼W
R713	1	1	1	GD05152140	Resistor, 1.5kΩ ±5% ¼W
R714	1	1	1	GD05152140	Resistor, 1.5kΩ ±5% ¼W
R715	1	1	1	GD05823140	Resistor, 82kΩ ±5% ¼W
R716	1	1	1	GD05823140	Resistor, 82kΩ ±5% ¼W
R717	1	1	1	GD05153140	Resistor, 15kΩ ±5% ¼W
R718	1	1	1	GD05153140	Resistor, 15kΩ ±5% ¼W
R719	1	1	1	GD05102140	Resistor, 1kΩ ±5% ¼W
R720	1	1	1	GD05102140	Resistor, 1kΩ ±5% ¼W
R721	1	1	1	GD05473140	Resistor, 47kΩ ±5% ¼W
R722	1	1	1	GD05473140	Resistor, 47kΩ ±5% ¼W
R723	1	1	1	GD05122140	Resistor, 1.2kΩ ±5% ¼W
R724	1	1	1	GD05122140	Resistor, 1.2kΩ ±5% ¼W
R725	1	1	1	GD05223140	Resistor, 22kΩ ±5% ¼W
R726	1	1	1	GD05223140	Resistor, 22kΩ ±5% ¼W
R727	1	1	1	GJ05222010	Resistor, 2.2kΩ ±5% 1W
R728	1	1	1	GJ05222010	Resistor, 2.2kΩ ±5% 1W
R729	1	1	1	GJ05152010	Resistor, 1.5kΩ ±5% 1W
R730	1	1	1	GJ05152010	Resistor, 1.5kΩ ±5% 1W
R731	1	1	1	GD05153140	Resistor, 15kΩ ±5% ¼W
R732	1	1	1	GD05153140	Resistor, 15kΩ ±5% ¼W
R733	1	1	1	GD05153140	Resistor, 15kΩ ±5% ¼W
R734	1	1	1	GD05153140	Resistor, 15kΩ ±5% ¼W
R735	1	1	1	GD05561140	Resistor, 560Ω ±5% ¼W
R736	1	1	1	GD05561140	Resistor, 560Ω ±5% ¼W
R737	1	1	1	GD05561140	Resistor, 560Ω ±5% ¼W
R738	1	1	1	GD05561140	Resistor, 560Ω ±5% ¼W
R739	1	1	1	RA02230050	Trimming Resistor, 22kΩ CR29R
R740	1	1	1	RA02230050	Trimming Resistor, 22kΩ CR29R
R741	1	1	1	GD05203140	Resistor, 20kΩ ±5% ¼W
R742	1	1	1	GD05203140	Resistor, 20kΩ ±5% ¼W
R743	1	1	1	GD05222140	Resistor, 2.2kΩ ±5% ¼W
R744	1	1	1	GD05222140	Resistor, 2.2kΩ ±5% ¼W
R745	1	1	1	GD05222140	Resistor, 2.2kΩ ±5% ¼W
R746	1	1	1	GD05222140	Resistor, 2.2kΩ ±5% ¼W
R747	1	1	1	GD05470140	Resistor, 47Ω ±5% ¼W
R748	1	1	1	GD05470140	Resistor, 47Ω ±5% ¼W
R749	1	1	1	GD05470140	Resistor, 47Ω ±5% ¼W
R750	1	1	1	GD05470140	Resistor, 47Ω ±5% ¼W
R751	1	1	1	GD05680140	Resistor, 68Ω ±5% ¼W
R752	1	1	1	GD05680140	Resistor, 68Ω ±5% ¼W
R753	1	1	1	GD05910140	Resistor, 91Ω ±5% ¼W
R754	1	1	1	GD05910140	Resistor, 91Ω ±5% ¼W
R755	1	1	1	GD05910140	Resistor, 91Ω ±5% ¼W
R756	1	1	1	GD05910140	Resistor, 91Ω ±5% ¼W
R757	1	1	1	GD05273140	Resistor, 27kΩ ±5% ¼W
R758	1	1	1	GD05273140	Resistor, 27kΩ ±5% ¼W
R759	1	1	1	GF05100140	Resistor, 10Ω ±5% ¼W
R760	1	1	1	GF05100140	Resistor, 10Ω ±5% ¼W
R761	1	1	1	GF05100140	Resistor, 10Ω ±5% ¼W
R762	1	1	1	GF05100140	Resistor, 10Ω ±5% ¼W
R763	1	1	1	GD05100140	Resistor, 10Ω ±5% ¼W
R764	1	1	1	GD05100140	Resistor, 10Ω ±5% ¼W
R765	1	1	1	GD05100140	Resistor, 10Ω ±5% ¼W
R766	1	1	1	GD05100140	Resistor, 10Ω ±5% ¼W

REF. DESIG.	Q'TY U	C	E	PART NO.	DESCRIPTION
R767	1	1	1	GJ05562010	Resistor, 5.6kΩ ±5% 1W
R768	1	1	1	GJ05562010	Resistor, 5.6kΩ ±5% 1W
R769	1	1	1	GJ05562010	Resistor, 5.6kΩ ±5% 1W
R770	1	1	1	GJ05562010	Resistor 5.6kΩ ±5% 1W
R771	1	1	1	GD05820140	Resistor, 82Ω ±5% ¼W
R772	1	1	1	GD05820140	Resistor, 82Ω ±5% ¼W
R773	1	1	1	GD05820140	Resistor, 82Ω ±5% ¼W
R774	1	1	1	GD05820140	Resistor, 82Ω ±5% ¼W
R775	1	1	1	GF05330140	Resistor, 33Ω ±5% ¼W
R776	1	1	1	GF05330140	Resistor, 33Ω ±5% ¼W
R777	1	1	1	GF05330140	Resistor, 33Ω ±5% ¼W
R778	1	1	1	GF05330140	Resistor, 33Ω ±5% ¼W
R779	1	1	1	GF05240120	Resistor, 24Ω ±5% ½W
R780	1	1	1	GF05240120	Resistor, 24Ω ±5% ½W
R781	1	1	1	GF05240120	Resistor, 24Ω ±5% ½W
R782	1	1	1	GF05240120	Resistor, 24Ω ±5% ½W
R787	1	1	1	GW10332030	Resistor, 0.33Ω ±10% 3W
R788	1	1	1	GW10332030	Resistor, 0.33Ω ±10% 3W
R789	1	1	1	GW10332030	Resistor, 0.33Ω ±10% 3W
R790	1	1	1	GW10332030	Resistor, 0.33Ω ±10% 3W
R791	1	1	1	GW10332030	Resistor, 0.33Ω ±10% 3W
R792	1	1	1	GW10332030	Resistor, 0.33Ω ±10% 3W
R793	1	1	1	GW10332030	Resistor, 0.33Ω ±10% 3W
R794	1	1	1	GW10332030	Resistor, 0.33Ω ±10% 3W
R795	1	1	1	GJ05100030	Resistor, 10Ω ±5% 3W
R796	1	1	1	GJ05100030	Resistor, 10Ω ±5% 3W
R797	1	1	1	GJ05022020	Resistor, 2.2Ω ±5% 2W
R798	1	1	1	GJ05022020	Resistor, 2.2Ω ±5% 2W
C851	1	1	1	DK18103510	Ceramic Cap., 0.01μF 500V
C852	1	1	1	DK18103510	Ceramic Cap., 0.01μF 500V
C853	1	1	1	EA47706310	Electrolytic Cap., 470μF 63V
C854	1	1	1	EA47706310	Electrolytic Cap., 470μF 63V
C855	1	1	1	EA10701690	Electrolytic Cap., 100μF 16V
C856	1	1	1	EA10701690	Electrolytic Cap., 100μF 16V
C857	1	1	1	DF16102010	Film Cap., 0.001μF ±10% 50V
C858	1	1	1	DF16102010	Film Cap., 0.001μF ±10% 50V
C859	1	1	1	EA10701690	Electrolytic Cap., 100μF 16V
C860	1	1	1	EA33505090	Electrolytic Cap., 3.3μF 50V
C861	1	1	1	EA33505090	Electrolytic Cap., 3.3μF 50V
Q851	1	1	1	HD20013030	Diode, DS-133B
Q852	1	1	1	HD20013030	Diode, DS-133B
Q853	1	1	1	HT403132P0	Transistor, 2SD313 (D or E)
Q854	1	1	1	HT205072P0	Transistor, 2SB507 (D or E)
Q855	1	1	1	HT315091Q0	Transistor, 2SC1509 Q
Q856	1	1	1	HT107771Q0	Transistor, 2SA777 Q
Q857	1	1	1	HD30023090	Zener, WZ-071
Q858	1	1	1	HD30023090	Zener, WZ-071
Q859	1	1	1	HD20003210	Diode, 1S2471 Black
Q860	1	1	1	HD20003210	Diode, 1S2471 Black
R851	1	1	1	GJ05022010	Resistor, 2.2Ω ±5% 1W
R852	1	1	1	GJ05022010	Resistor, 2.2Ω ±5% 1W
R853	1	1	1	RT05332140	Resistor, 3.3kΩ ±5% ¼W
R854	1	1	1	RT05332140	Resistor, 3.3kΩ ±5% ¼W
R855	1	1	1	RT05222140	Resistor, 2.2kΩ ±5% ¼W
R856	1	1	1	RT05222140	Resistor, 2.2kΩ ±5% ¼W
R857	1	1	1	GJ05562010	Resistor, 5.6kΩ ±5% 1W
R858	1	1	1	RT05273140	Resistor, 27kΩ ±5% ¼W

- (U) for U.S.A.
- (C) for Canada
- (E) for Europe

REF. DESIG.	Q'TY U	C	E	PART NO.	DESCRIPTION
R859	1	1	1	RT05682140	Resistor, 6.8kΩ ±5% ¼W
R860	1	1	1	RT05333140	Resistor, 33kΩ ±5% ¼W
R861	1	1	1	RT05273140	Resistor, 27kΩ ±5% ¼W
R862	1	1	1	GJ05472010	Resistor, 4.7kΩ ±5% 1W
R863	1	1	1	RT05472140	Resistor, 4.7kΩ ±5% ¼W
R864	1	1	1	RT05562140	Resistor, 5.6kΩ ±5% ¼W

12. TECHNICAL SPECIFICATIONS

FOR U.S.A. MODEL ONLY

AMPLIFIER SECTION:

RATED POWER OUTPUT, MINIMUM CONTINUOUS AVERAGE POWER PER CHANNEL, BOTH CHANNELS DRIVEN . . . . . 76 W
POWER BAND . . . . . 20 Hz to 20 kHz
TOTAL HARMONIC DISTORTION 0.03%
LOAD IMPEDANCE . . . . . 8 OHMS
RATED POWER OUTPUT, MINIMUM CONTINUOUS AVERAGE POWER PER CHANNEL, BOTH CHANNELS DRIVEN . . . . . 95 W
POWER BAND . . . . . 20 Hz to 20 kHz
TOTAL HARMONIC DISTORTION (AT MAIN IN) 0.06%
LOAD IMPEDANCE . . . . . 4 OHMS

I.M. Distortion
(I.H.F. method, 60 Hz and 7 kHz mixed 4:1 at rated power output)
at 8 ohm load impedance 0.03%
at 4 ohm load impedance (at MAIN IN) 0.06%
Damping Factor (at 20 Hz) 60
Sensitivity (at MAIN IN) . . . . . 1.5 V
Impedance (at MAIN IN) . . . . . 36k ohms
Frequency Response for Power Amp Only
(at 1 Watt output, 20 Hz to 20 kHz) . . . . . ±0.2 dB
S/N Ratio (MAIN IN, "A" WEIGHTED) . . . . . 110 dB

PREAMPLIFIER SECTION:

Phono
Input Overload at 1 kHz . . . . . 310 mV
Equivalent Input Noise ("A" WEIGHTED) . . . . . 0.48 μV
Dynamic Range
(Dynamic Range is the ratio of input overload to equivalent input noise) . . . . . 117 dB
Input Sensitivity . . . . . 1.8 mV
Input Impedance . . . . . 47k ohms
Frequency Response, RIAA 20 Hz to 20 kHz . . . . . ±0.2 dB
Signal-to-Noise Ratio
(at rated output and 7.75 mV input, "A" WEIGHTED) . . . . . 83 dB
High Level (Aux and Tape)
Input Sensitivity . . . . . 180 mV
Input Impedance . . . . . 20k ohms
Frequency Response
(includes power amp) . . . . . 5 Hz to 60 kHz ±1.0 dB
Signal-to-Noise Ratio
(ref. to rated output and 775 mV input) . . . . . 93 dB
Output Levels
Tape Out (ref. 7.75 mV at Phono input, "A" WEIGHTED) . . . . . 775 mV
Pre-Out (ref. 180 mV at Aux inputs) . . . . . 1.5 V
(ref. 500 mV at Aux inputs, main amp disconnected) . . . . . 4.2 V
Output Impedance
Tape Out . . . . . 330 ohms
Pre-Out . . . . . 220 ohms

GENERAL:

Power Requirements . . . . . 120 V AC, 60 Hz
Power Consumption at rated output, both channels operating . . . . . 290 W
Idling Power (Volume Control at zero) . . . . . 40 W
Dimensions:
Panel Width . . . . . 416mm (16-3/8")
Panel Height . . . . . 146mm (5-3/4")
Depth . . . . . 316mm (12-3/8")
Weight:
Unit alone . . . . . 14.0 kg (30.8 lbs)
Packed for Shipment . . . . . 16.0 kg (35.2 lbs)

FOR EUROPEAN MODEL ONLY

AUDIO SECTION

POWER OUTPUT AT 1% DISTORTION . . . . . **172 W**
RATED POWER OUTPUT, 1kHz . . . . . **95 W**
TOTAL HARMONIC DISTORTION AT RATED POWER OUTPUT, 1kHz **0.09%**
I.M. DISTORTION AT RATED POWER OUTPUT
(I.H.F. METHOD, 300 Hz AND 10 kHz MIXED 4:1 AT RATED POWER OUTPUT) **0.09%**
POWER BANDWIDTH, ½ RATED POWER OUTPUT . . . . . **7 Hz ~ 70 kHz**
LOAD IMPEDANCE . . . . . **4 OHMS**
POWER OUTPUT AT 1% DISTORTION . . . . . **100 W**
RATED POWER OUTPUT, 1 kHz . . . . . **76 W**
TOTAL HARMONIC DISTORTION AT RATED POWER OUTPUT, 1 kHz **0.03%**
I.M. DISTORTION AT RATED POWER OUTPUT
(I.H.F. METHOD, 300 Hz AND 10 kHz MIXED 4:1 AT RATED POWER OUTPUT) **0.03%**
POWER BANDWIDTH, ½ RATED POWER OUTPUT . . . . . **7 Hz ~ 70 kHz**
LOAD IMPEDANCE . . . . . **8 OHMS**

Damping Factor, SP Output
40 Hz 60
1 kHz 50
12.5 kHz 45
Frequency Response
Phono ± 2 dB . . . . . ±0.5 dB
Aux ±1.5 dB . . . . . ±0.5 dB
Main In ±1.5 dB . . . . . ±0.2 dB
Signal-to-Noise Ratio, 1 kHz
Phono . . . . . 78 dB
Aux . . . . . 91 dB
Main In . . . . . 58 dB
Input Sensitivity, 1 kHz (Rated Input Voltage)
Phono . . . . . 1.8 mV
Aux . . . . . 180 mV
Main In . . . . . 1.5 V
Input Impedance, 1 kHz
Phono . . . . . 47 k ohms
Aux . . . . . 20 k ohms
Main In . . . . . 36 k ohms
Phono Equivalent Input Noise . . . . . 1.0 μV
Phono Dynamic Range . . . . . 110 dB
Phono Input Capacitance . . . . . 100 pF
Channal Balance
Phono 0 ~ –40 dB . . . . . 2.5 dB
Aux 40 Hz ~ 16 kHz . . . . . 2.0 dB
Main In . . . . . 1.0 dB
Interchannel Crosstalk
Phono 1 kHz . . . . . 51 dB
250 Hz ~ 10 kHz . . . . . 40 dB
Aux 1 kHz . . . . . 55 dB
250 Hz ~ 10 kHz . . . . . 33 dB
Tape 1 kHz . . . . . 45 dB
250 Hz ~ 10 kHz . . . . . 33 dB
Main In 1 kHz . . . . . 55 dB
250 Hz ~ 10 kHz . . . . . 50 dB
Intersource Crosstalk, Worst Point
1 kHz . . . . . 45 dB
250 Hz ~ 10 kHz . . . . . 33 dB
Output Voltage, 1 kHz
Tape Out . . . . . 0.18 V
Pre Out . . . . . 1.5 V
Output Impedance, 1 kHz
Tape Out . . . . . 330 ohms
Pre Out . . . . . 220 ohms
Power Consumption
Idling . . . . . 55 W
Rated Power, 1 kHz . . . . . 300 W

GENERAL:

Power Requirements . . . . . 220 V ~, 50 Hz
(E and N versions are featuring an external voltage selector for use on 110/120/240 V. Other versions can be converted by a qualified technician to operate on 110/120/240 V.)
Power Consumption at rated output, both channels operating . . . . . 290 W ±50 W
Idling Power . . . . . 40 W ±15 W
Semiconductor Complement
Transistors 73
Diodes 44
Field Effect Transistors 4
Dimensions
Panel Width . . . . . 416 mm (16-3/8 inches)
Panel Height . . . . . 146 mm (5-3/4 inches)
Depth . . . . . 316 mm (12-3/8 inches)
Weight
Unit Alone . . . . . 14.0 kg (30.8 lbs)
Packed for Shipment . . . . . 16.0 kg (35.2 lbs)



marantz

MARANTZ CO., INC. · P. O. BOX 577 · CHATSWORTH, CALIFORNIA · 91311

•

A WHOLLY-OWNED SUBSIDIARY OF SUPERSCOPE INC., CHATSWORTH, CALIFORNIA · 91311

Printed in Japan

2964855010

5G

marantz®

SERVICE BULLETIN

model number 1152DC	bulletin number M-1152DC-1
for serial numbers —	
subject: SERVICE MANUAL CORRECTION	
technical services approval	writer
engineering approval	date 6-16-78

OBJECTIVE

This bulletin is issued to inform you of misprints in the service manual of Marantz Model 1152DC.

APPLICATION

Incorporate this correction into your manual as soon as possible to ensure correct service information.

PROCEDURE

Refer to the service manual, page 24 Schematic Diagram, Power Amplifier Section and make the corrections shown in the illustration below.

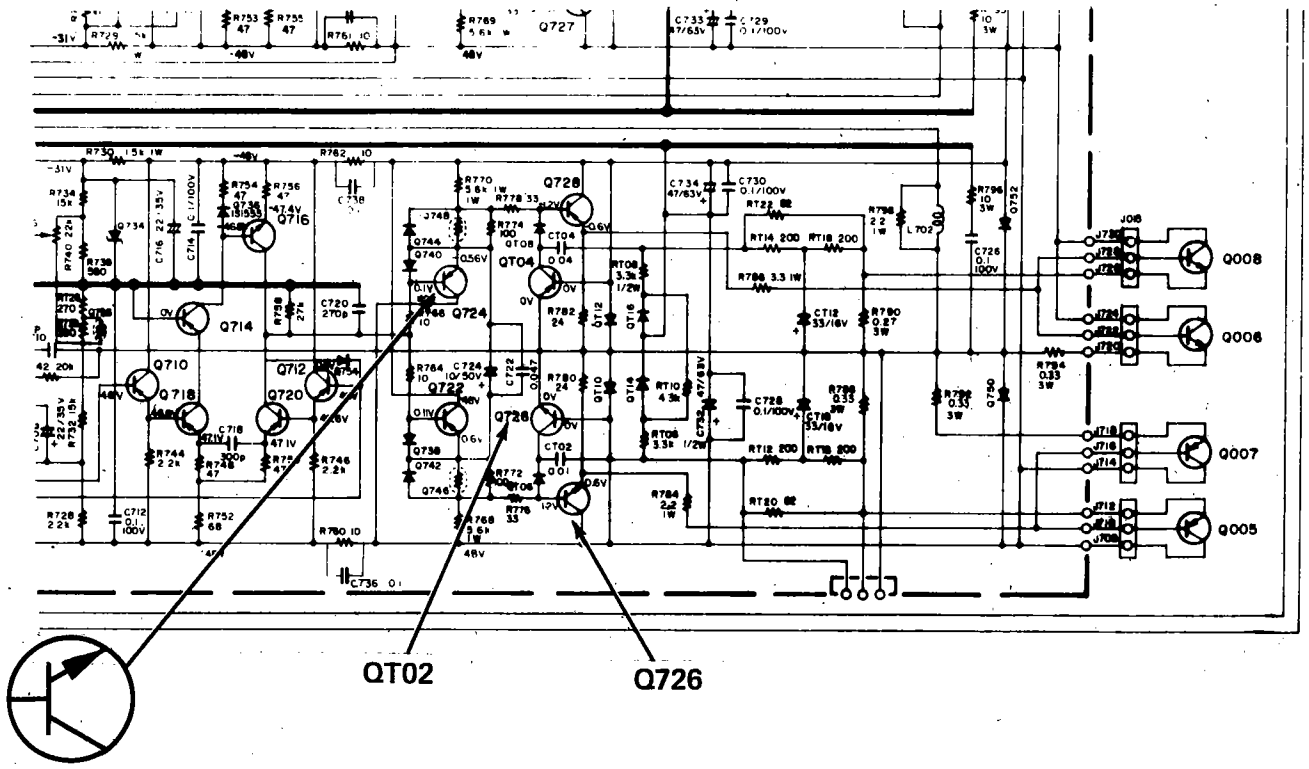

Marantz Company, Inc., 20525 Nordhoff St., Chatsworth, CA 91311 (213) 998-9333 873-2000 A Subsidiary of Superscope, Inc.