microKORG XL (MKXL)
SERVICE MANUAL



TABLE OF CONTENTS

ASSEMBLY SKETCH (HOOKUP): 2
BLOCK DIAGRAM: 3
SCHEMATIC DIAGRAM: 4-9
TEST MODE: 10-19
PARTS LIST: 20-22

KORG

Issued: Dec. 9, 2008
Ver. 1.0

©2008 KORG INC.

microKORG XL HOOK UP

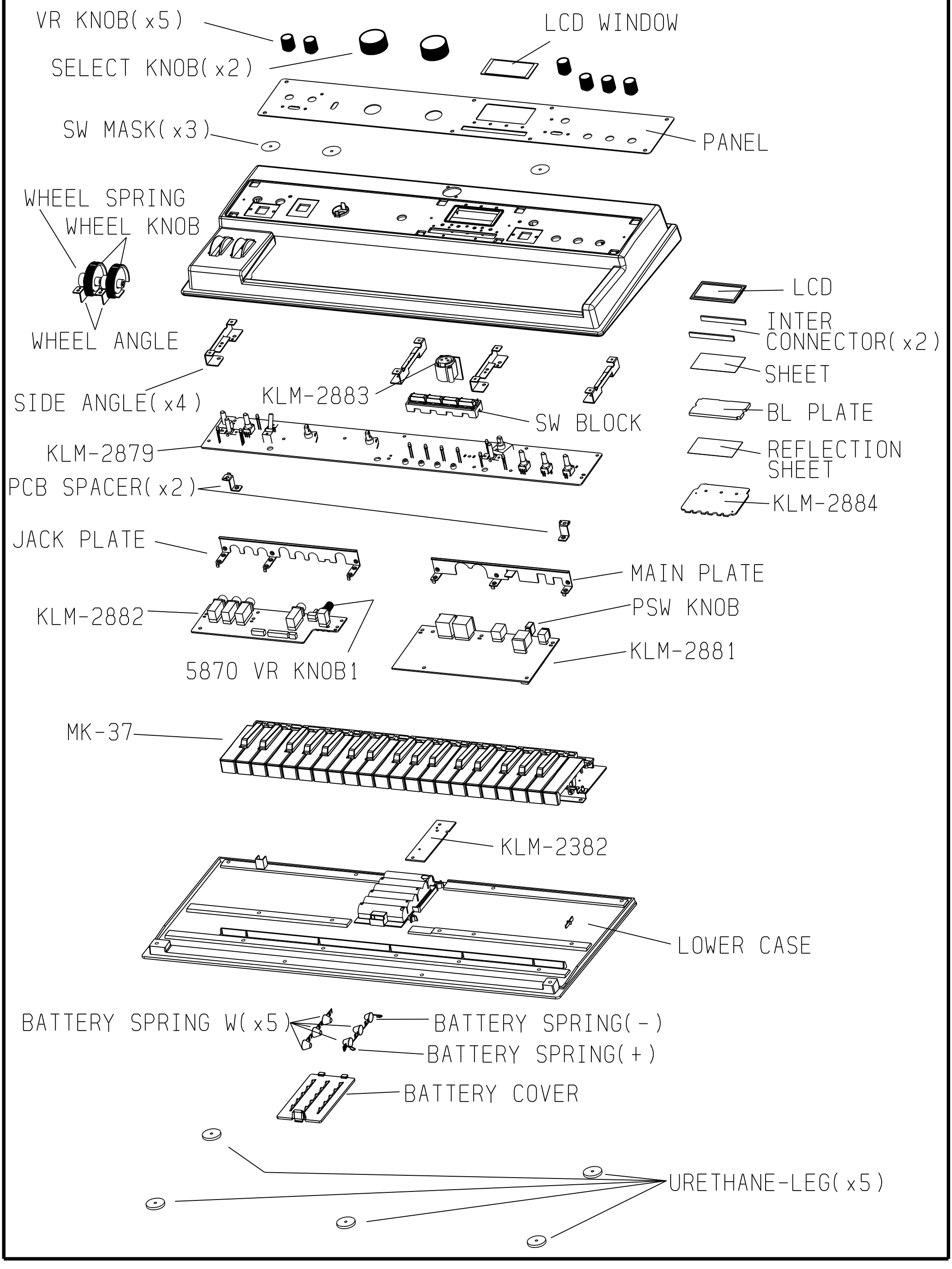

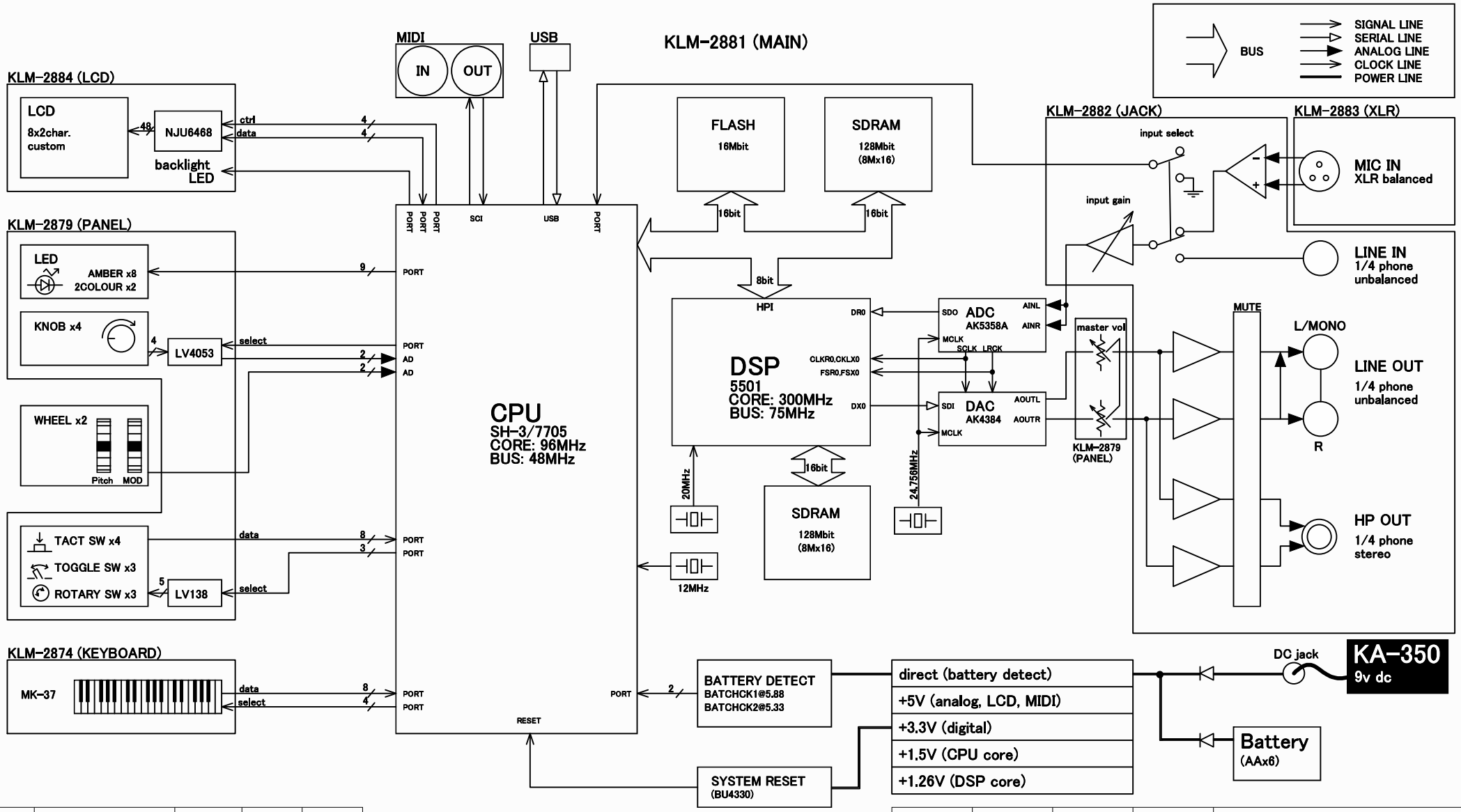

MARK	REVISION REASON	DATE	REVISED	APPROVED

DRAWN BY	DESIGNED BY	CHECKED BY	APPROVED BY	MODEL
T. Takahashi	M. Kuwabara	桑原 2008.10.01 (株)コルグ	小林 2008.10.01 (株)コルグ	X-6140

TITLE: BLOCK DIAGRAM

KORG

DRAWING NO: KOD-B40323

DATE: 2008/10/01

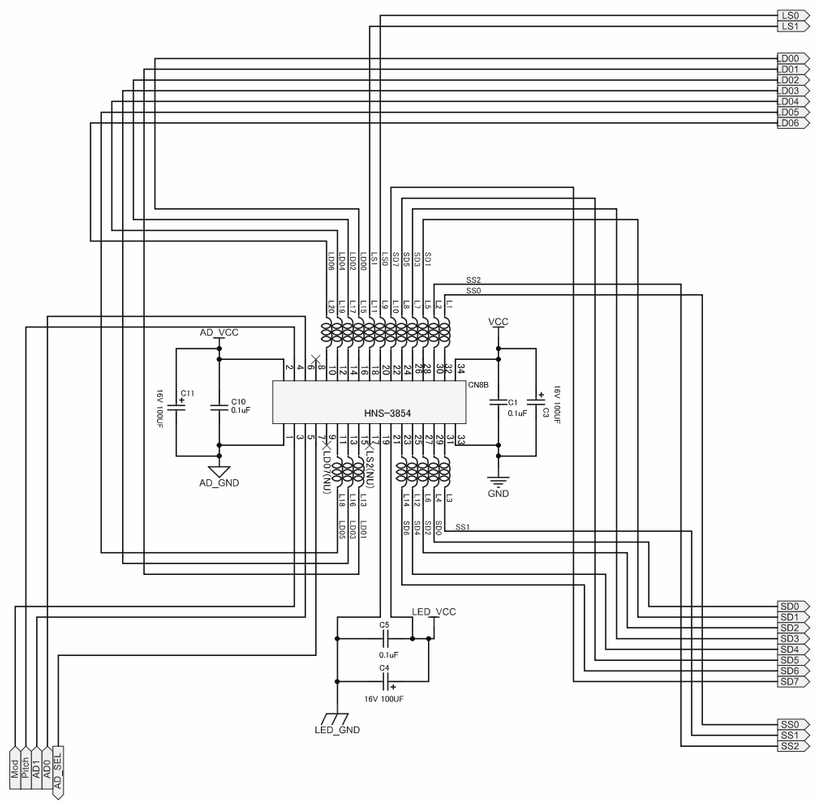

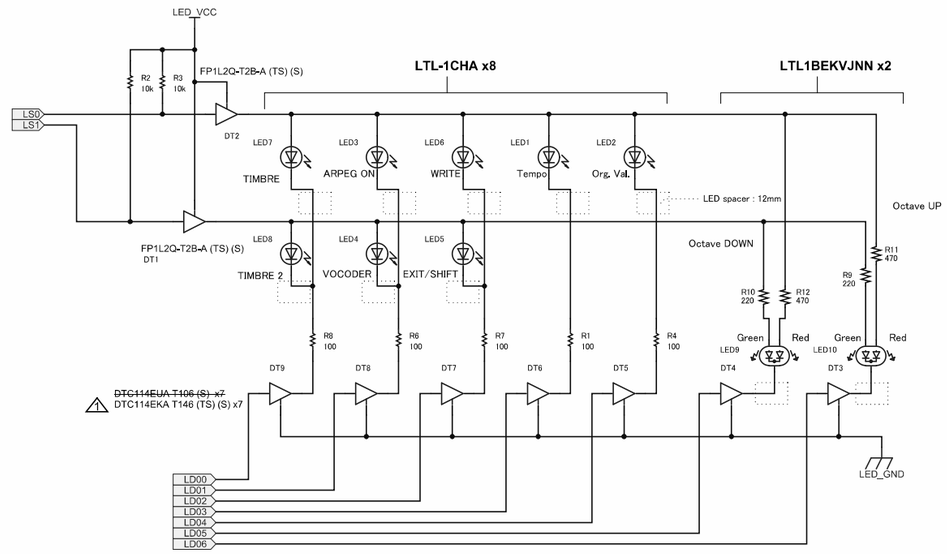

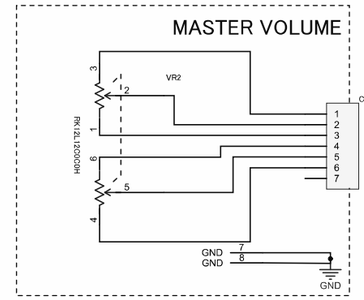

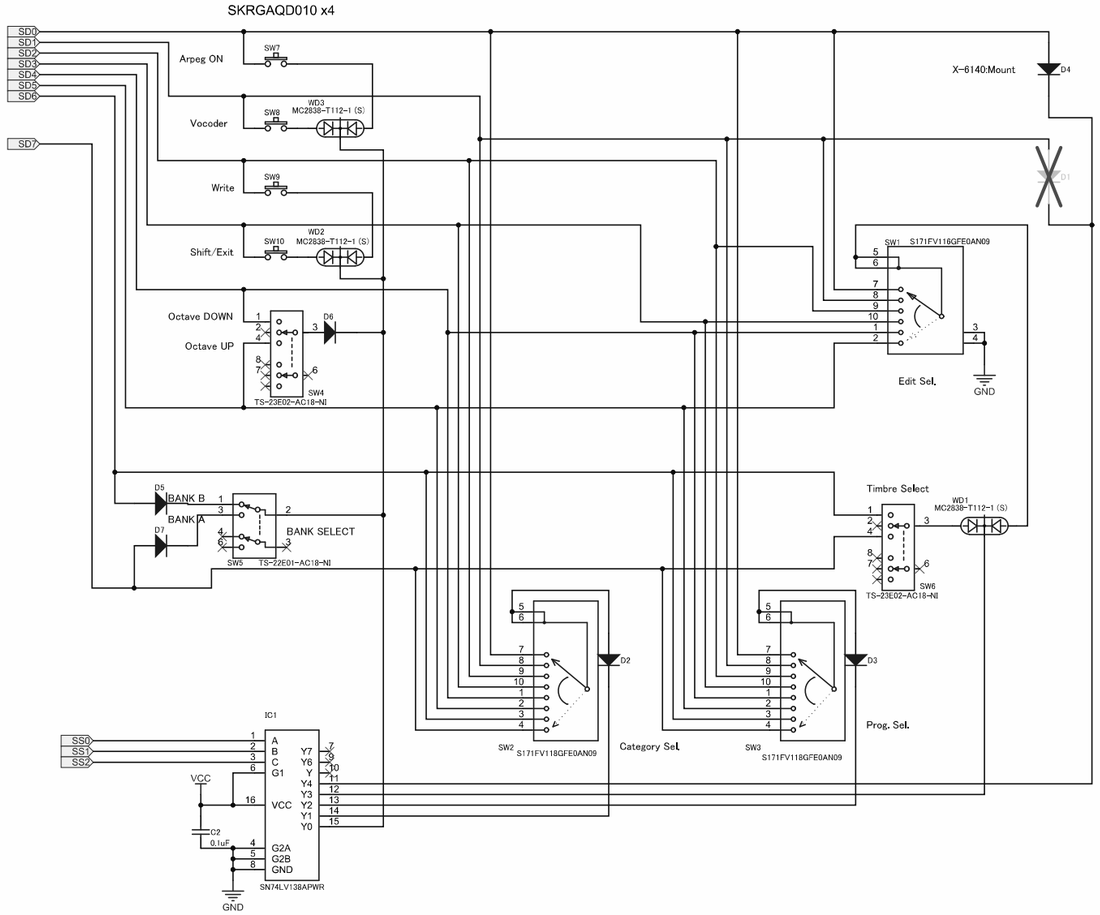

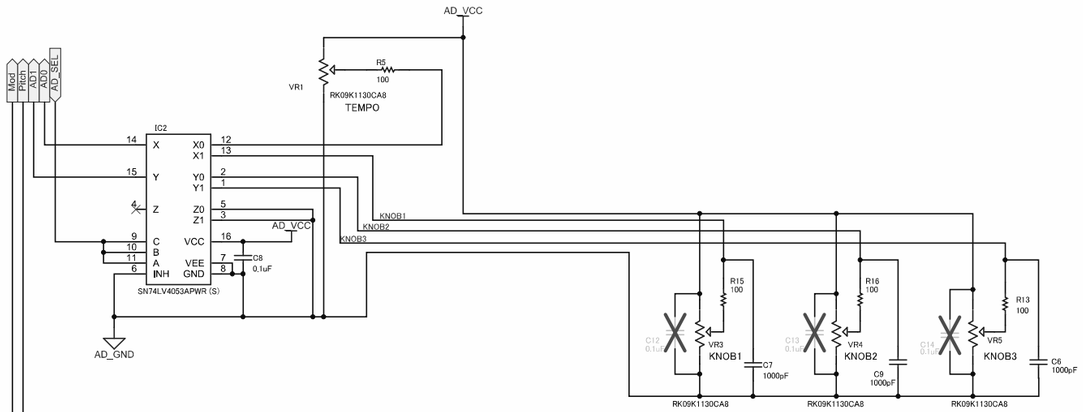

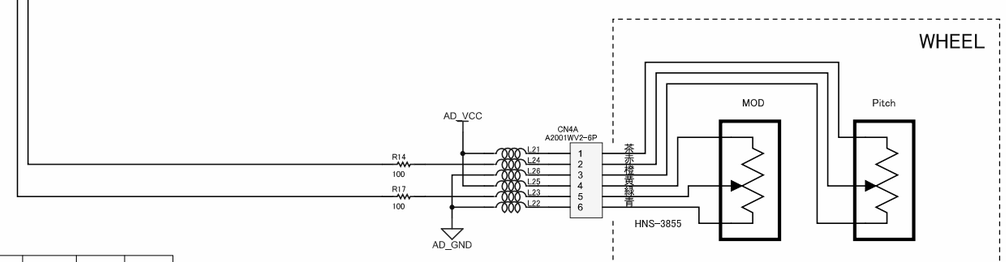

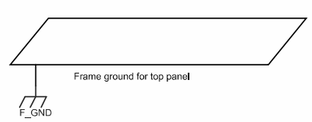

All single diodes: RLS-73 TE-11 (S)

MARK	REVISION REASON	DATE	REVISED	APPROVED
1	package correction	2008.11.06	T.Takahashi	

DRAWN BY	DESIGNED BY	CHECKED BY	APPROVED BY	MODEL X-6140
T. Takahashi	T. Takahashi	M.Kuwabara	Masami	TITLE KLM-2879 PANEL

1 / 1

KORG

DRAWING NO KOD-A30790

DATE 2008.10.01

CPU

HD6417705F100BV

IC5

Flash

IC20

M29W160EB70N6E

SDRAM

IC21

V54C3128164VBI7(TP)

Nand Flash

IC3

HY27UF081G2A

IC6A IC6B IC6C IC6D IC6E SN74LV32APWR

* X-6150 Only

MC2840-T112-1 (S) x4

CPU Terminate

SDRAM Terminate

pull down at DSP

pull up at AD

Reserve

Reserve(*LS3)

MD5

	MD5
Big endian	0
Little Endian	1

area0	MD4	MD3
16bit	1	0
8bit	0	1
32bit	1	1

clock	MD2	MD1	MD0	PLL	
0	0	0	0	x1	EXtal
1	0	0	1	x4	EXtal
2	0	1	0	x4	Xtal

MARK	REVISION REASON	DATE	REVISED	APPROVED

DRAWN BY	DESIGNED BY	CHECKED BY	APPROVED BY	MODEL
T. Takahashi	M.Kuwabara	M.Kuwabara	Masami	X-6140

TITLE: KLM-2881 MAIN CPU

1 / 3

KORG

DRAWING NO: KOD-A30791

DATE: 2008.10.01

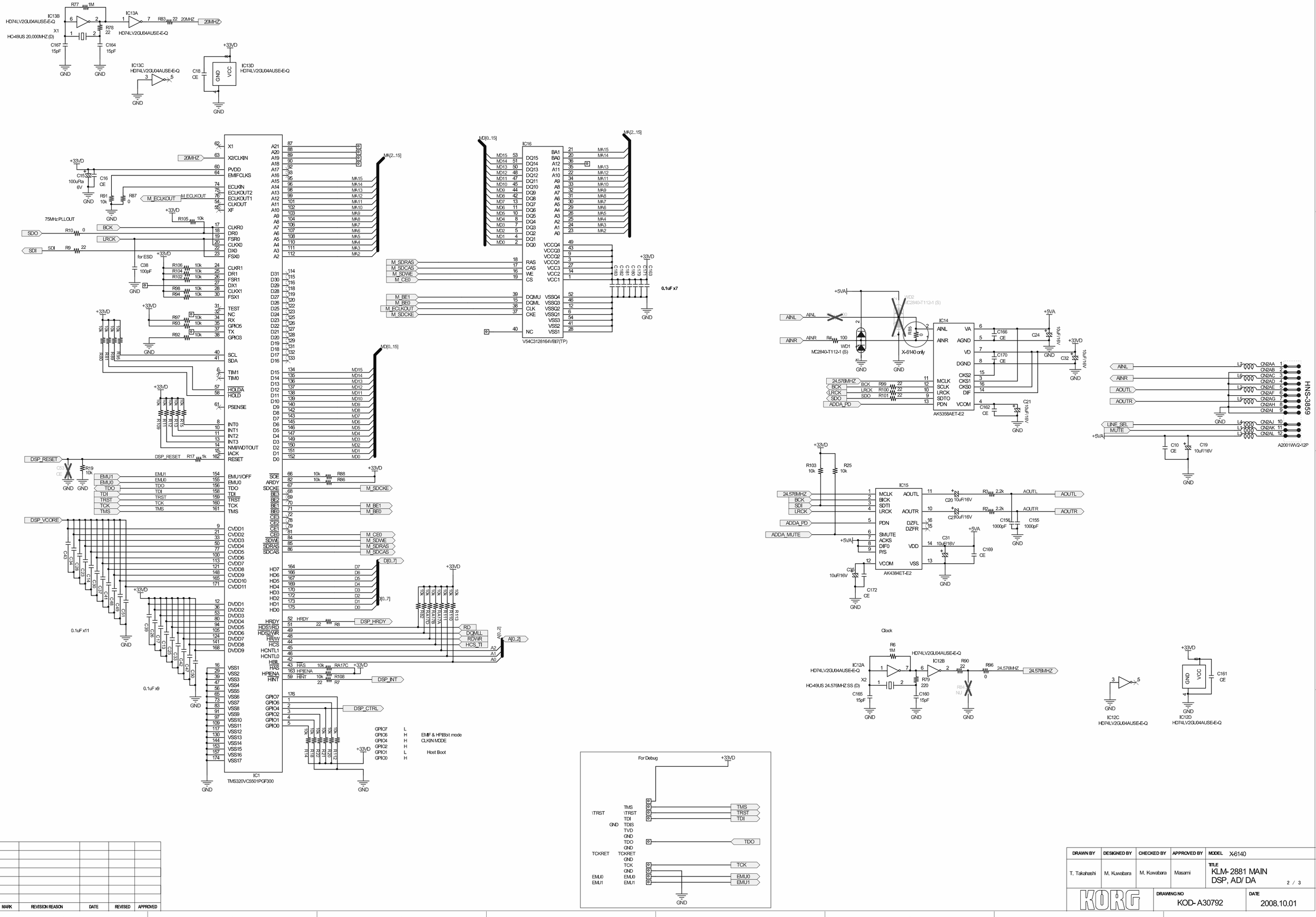

MARK	REVISION REASON	DATE	REVISED	APPROVED

DRAWN BY	DESIGNED BY	CHECKED BY	APPROVED BY	MODEL X-6140
T. Takahashi	M. Kuwabara	M. Kuwabara	Masami	TITLE KLM-2881 MAIN DSP, AD/ DA 2 / 3
KORG		DRAWING NO KOD-A30792		DATE 2008.10.01

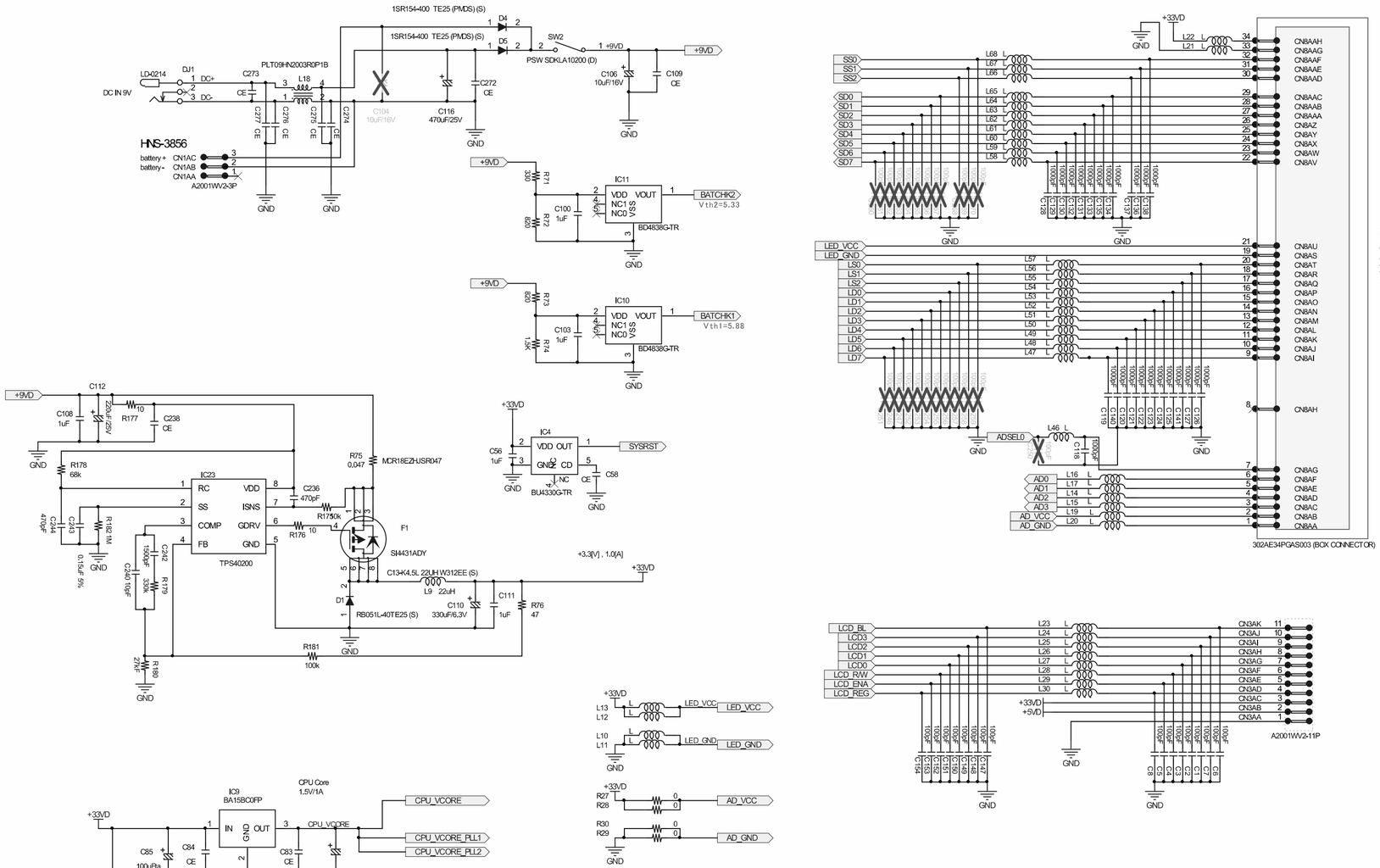
1SR154-400 TE25 (PMDS) (S)
D4
D5
SW2
PSW SDKLA10200 (D)
+9VD
DC IN 9V
LD-0214
DJ1
PLT09HN2003R0P1B
C273
L18
C104 10uF/16V
C116 470uF/25V
C272 CE
C106 10uF/16V
C109 CE
HNS-3856
battery +
battery -
CN1AC
CN1AB
CN1AA
A2001WV2-3P
GND
IC11
VDD VOUT
NC1 VSS
NC0
BD4838G-TR
BATCHK2
Vth2=5.33
R130 820
R124 1M
C100 1uF
IC10
BATCHK1
Vth1=5.88
R123 820
R124 1M
C103 1uF
C112
C108 1uF
220uF/25V
R177 10
C238 CE
R178 68k
IC23
RC VDD
SS ISNS
COMP GDRV
FB GND
TPS40200
R75 0,047
MCR18EZHJSR047
R179 150k
R176 10
R174 50k
F1
SI4431ADY
C236 470pF
C234 470pF
C213
R180 4M
0.15uF 5%
C240 10pF
C242 1500pF
R179 33k
R180 27kF
R181 100k
C134-4,5L 22UH W312EE (S)
L9 22uH
C110 330uF/6.3V
C111 1uF
R76 47
D1
RB051L-40TE25 (S)
+3.3[V] , 1.0[A]
+33VD
IC4
VDD OUT
GND CD
NC
BU4330G-TR
SYSRST
C56 1uF
C58 CE
SS0
SS1
SS2
SD0
SD1
SD2
SD3
SD4
SD5
SD6
SD7
L68
L67
L66
L65
L64
L63
L62
L61
L60
L59
L58
C128
C129
C130
C131
C132
C133
C134
C135
C136
C137
C138
C139
C140
C141
C142
C143
C144
C145
C146
C147
C148
C149
C150
C151
C152
C153
C154
C155
C156
C157
C158
C159
C160
C161
C162
C163
C164
C165
C166
C167

MIC in full-scale level	- 30.2dBu@max gain - 11dBu (input clip limit)
LINE in full-scale level	- 13dBu@max gain +19dBu (opamp current limit)

LINE output	+6dBu @0.5%THD ⟵ reaches full output@100%DAC output
HP output (33R,16R)	36+36mW@0.5%THD ⟵ reaches full output@75%DAC output

(with master VR set to max)

microphone input
MAX GAIN = 33dB
Zin.mic = 14K

line input
MAX GAIN = 16dB
Zin.line = 8K

KLM-2883 (XLR SUB PCB)

XLR1
LX-1604H-3
HNS-3858
MIC COLD CN7BA
MIC HOT CN7BB
MIC GND CN7BC
CN7AA
CN7AB
CN7AC
L11
L10
L9
L7
L8
C51 25V 10uF
C54 25V 10uF
C53 56p
C55 56p
R42 47K
R44 6.8K
R46 6.8K
R47 47K
IC4A TLV2362IDR
C58 1000p
C46 1000p
C59 1000p
C48 1000p
AGND

+5VA
C49 CE
IC4C TLV2362IDR

VR2 50K A
* X-6140 only
X-6140 INPUT VR
RK09D1110C1G
C61 25V 10uF
R52 100K
SW1 SK-22D06G8 2P2T (D)
INR
For X-6150
YKB21-5074G (PHONE JACK) (D)
PH5
L6
1M R41
C44 1000p
C45 1000p
R48 1K
C52 25V 10uF
R43 6.8K
R51 100K
C57 1000p
R45 6.8K
C50 33p
IC4B TLV2362IDR
C42 16V 10uF NP
R49 4.7K
R50 4.7K
C56 16V 100uF
C60 CE

* X-6150 only
INL
PH4
YKB21-5074G (PHONE JACK) (D)
L5
C37 1000p
C38 1000p
R39 1K
C36 25V 10uF
R40 100K
C35 1000p
VR1A 50K A
VR1B
X-6150 INPUT VR
RK12L12A0A05
C30 33p
IC3A TLV2362IDR
IC3B TLV2362IDR
C41 16V 10uF NP
R37 6.8K
R36 6.8K
R35 4.7K
R38 4.7K
C34 CE
C33 16V 100uF
C27 CE
IC3C TLV2362IDR

KLM-2881
Main
CN2BA 1 AINL
CN2BB 2 AGND
CN2BC 3 AINR
CN2BD 4 AGND
CN2BE 5 AOUTL
CN2BF 6 AGND
CN2BG 7 AOUTR
CN2BH 8 AGND
CN2BI 9 AGND
CN2BJ 10 LINE_SEL
CN2BK 11 MUTE
CN2BL 12 +5VA
HNS-3859

KLM-2879
Master VR
CN6AA
CN6AB
CN6AC
CN6AD
CN6AE
CN6AF
CN6AG
10KB
10KB
HNS-3857
C39 1000p
C40 1000p
L_OUT
R_OUT
C31 100p
C32 100p
C29 25V 10uF
C28 25V 10uF
C47 CE
C43 16V 100uF

R31 10
R33 10
R32 10
R34 10
C21 16V 100uF
C24 CE
C6 16V 100uF
C11 CE
IC2C TLV2362IDR
IC1C TDA1308T/N2 (S)
R19 4.7K
R15 4.7K
C14 16V 100uF
C18 CE
R22 47K
C16 220p
R18 27K
R25 47K
IC2A TLV2362IDR
C19 25V 10uF
R20 1K
R21 100
L3
C15 1000p
R26 100K
R13 1K
Q2 2SC3661-TB-E (S)
C17 1000p
L/ MONO
PH2
YKB21-5074G (PHONE JACK) (D)
R30 47K
C25 220p
R29 27K
C20 CE
R28 47K
IC2B TLV2362IDR
C26 25V 10uF
R23 1K
R24 100
L4
C22 1000p
R27 100K
R14 1K
Q1 2SC3661-TB-E (S)
C23 1000p
R
PH3
YKB21-5074G (PHONE JACK) (D)
R5 4.7K
C3 CE
R1 4.7K
C2 16V 100uF
R11 47K
C13 100p
R10 100K
R12 47K
IC1B TDA1308T/N2 (S)
C12 25V 220uF
R4 47K
C7 100p
R3 100K
C8 CE
R7 47K
IC1A TDA1308T/N2 (S)
C1 25V 220uF
MUTE
R9 10
R17 1K
C9 0.01uF
L2
C10 1000p
R8 4.7K
Q4 2SC3661-TB-E (S)
HEADPHONE OUT
PH1
YKB21-5074G (PHONE JACK) (D)
R2 10
R16 1K
C4 0.01uF
L1
C5 1000p
R6 4.7K
Q3 2SC3661-TB-E (S)

All L: **BLM18BD102SN1D (S)**

MARK	REVISION REASON	DATE	REVISED	APPROVED

DRAWN BY	DESIGNED BY	CHECKED BY	APPROVED BY	MODEL X6140
TATSUYA TAKAHASHI	TATSUYA TAKAHASHI	2008.10.01	2008.10.01	TITLE KLM-2882, KLM-2883 ANALOG/ XLR
KORG		DRAWING NO KOD-A30795		DATE 2008/ 10/ 01

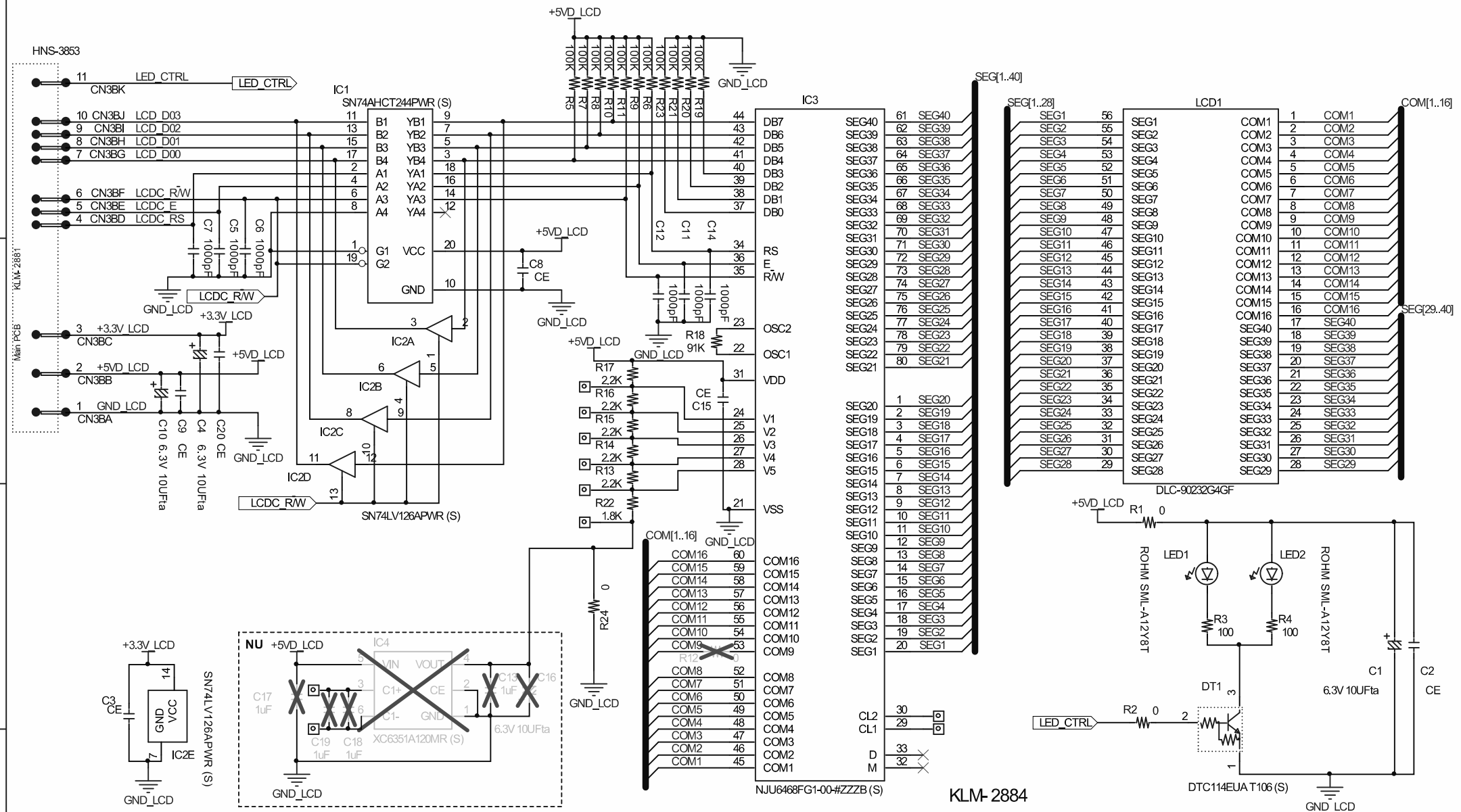
HNS-3853
KLM-2881
Main PCB
LED_CTRL
CN3BK
CN3BJ LCD_D03
CN3BI LCD_D02
CN3BH LCD_D01
CN3BG LCD_D00
CN3BF LCDC_R/W
CN3BE LCDC_E
CN3BD LCDC_RS
CN3BC +3.3V_LCD
CN3BB +5VD_LCD
CN3BA GND_LCD
IC1
SN74AHCT244PWR (S)
IC2A
IC2B
IC2C
IC2D
SN74LV126APWR (S)
IC2E
IC3
NJU6468FG1-00-#ZZZB (S)
IC4
XC6351A120MR (S)
SEG[1..40]
SEG[1..28]
SEG[29..40]
COM[1..16]
LCD1
DLC-90232G4GF
LED1
LED2
ROHM SML-A12Y8T
DT1
DTC114EUA T106 (S)
KLM-2884
LCD PCB
DRAWN BY
T. TAKAHASHI
DESIGNED BY
T. TAKAHASHI
CHECKED BY
MODEL
X-6140
TITLE
KLM-2884 LCD
DRAWING NO.
KOD-A40674
DATE
2008/ 09/ 29
MARK
REVISION REASON
DATE
REVISED BY

MicroKORG XL TEST MODE (Check before shipping)

Standard setting

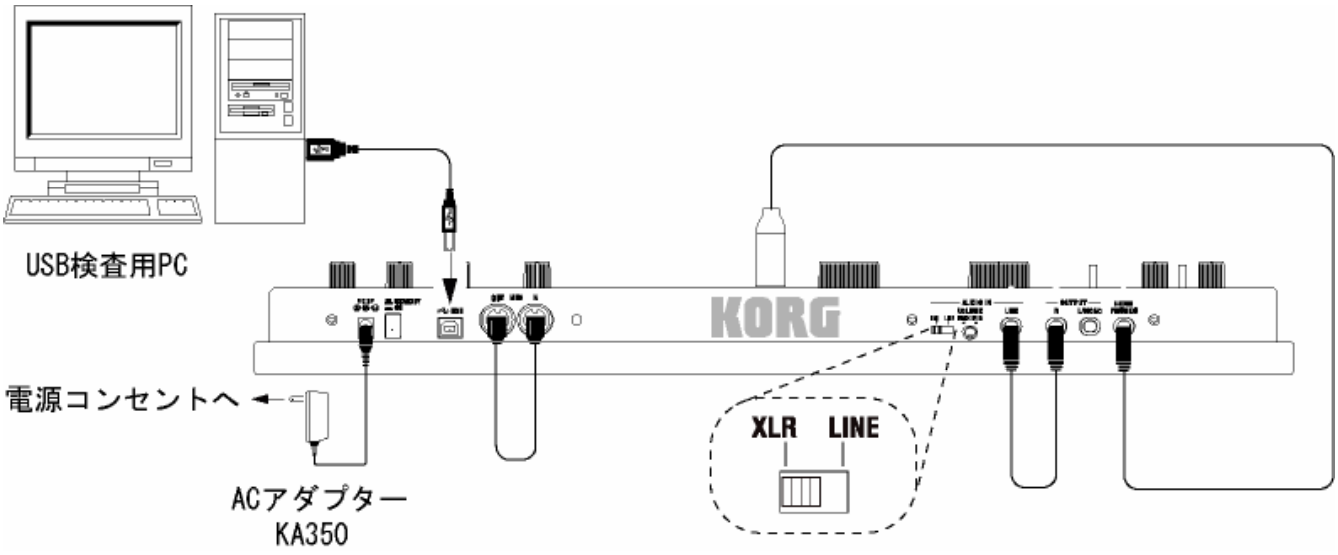

Equipments:

PC for USB check, Monitor display
AC/DC ADAPTER：KA350
Microphone （accessory of MKXL）
Standard monaural - Standard monaural Shield cable X2
XLR (cannon) – TRS (Standard Stereo) Shield cable
USB cable
MIDI cable
Oscillator (Standard cable)
Powered Speaker
Headphones
Regulated power supply KENWOOD PWR-1.8Q
Dummy battery AA (R6, LR6) X6
Current Meter VOAC7412
XLR Check tool

*When you can not prepare the dummy battery, connect the power supply to the battery terminals (+ and -) of MKXL directly.

Operation in the TEST MODE

Proceed to the next: [EXIT/SHIFT]
Proceed to the next check: [ARP ON] + OCTAVE Lever “UP”
Return to the former check: [ARP ON] + OCTAVE Lever “DOWN”
Proceed to the next item: [ARP ON] + TIMBER SELECT Lever “2”
Return to the former item: [ARP ON] + TIMBER SELECT Lever “1”
Check again when an error occurred: [VOCODER]
Skip when an error occurred: [ARP ON] + [EXIT/SHIFT]

PC for USB check：You need to install the KORG USB MIDI driver. (See owner’s manual)

1. Appearance Check (omitted)
2. **Start the TEST MODE, Power ON Noise check, Confirmation of system version**

Set like the figure in the previous page.
Still do not connect the USB cable.
Confirm that the OCTAVE and the TIMBER SELECT levers are at the center position.
Set the BANK SELECT lever at the “A”, confirm that the lever does not return to the center.
Set the PROGRAM GENRE and the PROGRAM CATEGORY dial to the “8” position.
Set the Edit Select dial to the “FULL EDIT” position.
Set the LINE/XLR switch on the rear panel to the XLR position.
Set the VOLUME on the front panel and the AUDIO LEVEL at the rear panel to the Max.

Confirm that the Edit Select dial is at the “FULL EDIT” position.
Pressing the [VOCODER] and the [EXIT/SHIFT], set the TIMBER SELECT to the “1” position then turn the power ON.

“SERVICE” is displayed in the upper part of the LCD, confirm that the system version which is displayed in the lower section of the LCD is the newest version.
After you remove your fingers, the TEST MODE starts.

3. **Internal Check**

In the TEST MODE, internal checks are executed.
1) SDRAM check
2) CPU terminals check
3) Flash ROM check
4) DSP check
5) LCD RAM check

Never turn the power OFF during these internal checks.

When an error is detected, the check stops displaying error message.
See the Error Message table. (See the last page of TEST MODE)

4. **Input Level check**

4-1 (HEADPHONES out – XLR in) XLR INPUT Level check

“HP=XLR” is displayed in the upper line of the LCD, “SW: XLR” is displayed in the lower line of the LCD.
Confirm the connection, the LINE/XLR switch is XLR, the VOLUME is Max, and the AUDIO IN level is max, then press the [EXIT/SHIFT].
This check measures automatically like following, MKXL outputs normal phase signal from the OUTPUTL and the reversed phase signal from OUTPUT R and MKXL measures input level of XLR and judge that the level is within the reference level.
The check is OK, the check proceeds to the next.

4-2) (OUTPUT R out – LINE in) LINE INPUT level check
“L/R=-/I” is displayed in the upper line of the LCD, “SW: LINE” is displayed in the lower line of the LCD.
Set the LINE/XLR switch to the “LINE”, press the [EXIT/SHIFT].
MKXL outputs standard level signal from the Rch and measures automatically that MKXL can read the signal of the reference level.
MKXL outputs standard level signal from the Lch and measures crosstalk level automatically that the level is within the reference level.
The result is OK, then the check proceeds to the next.

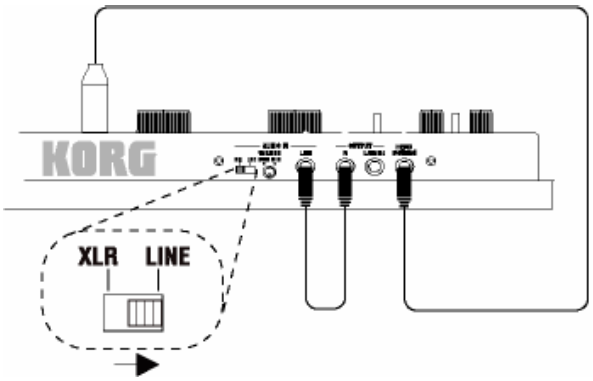

4-3 (OUTPUT L out – LINE in) LINE INPUT level check

“L/R=I/C” is displayed in the upper line of the LCD, “SW: LINE” is displayed in the lower line of the LCD.
Pull out the cable which was connected to the LINE (to output only L, do not pull out from the OUTPUT R).
Connect OUTPUT L and LINE using other cable.
Press the [EXIT/SHIFT].

MKXL outputs standard level signal from L ch and measures automatically that MKXL can read the signal of the reference level.
.
MKXL outputs standard level signal from R ch and measures crosstalk automatically if it is within the reference level.
The result is OK, then the check proceeds to the next.

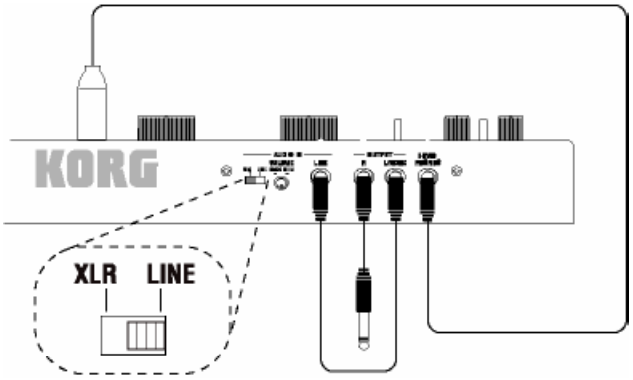

5. MIDI LOOP check

When the result is OK, the check proceeds to the next.

When an error was detected, the check stops displaying its error message in the LCD.
See the error message table of the internal check. (See the last page of TEST MODE.)

6. AUDIO check

6-1) AUDIO VR check

"AUD THRU" is displayed in the upper line of the LCD, "NEXT[EX]" is displayed in the lower line of the LCD.
(When "[THRU]" is displayed in the upper part, "[EXIT]ON" in the lower part, press [EXIT/SHIFT].)

Change the connection like the following figure.
Set the frequency of the oscillator at 1kHz.

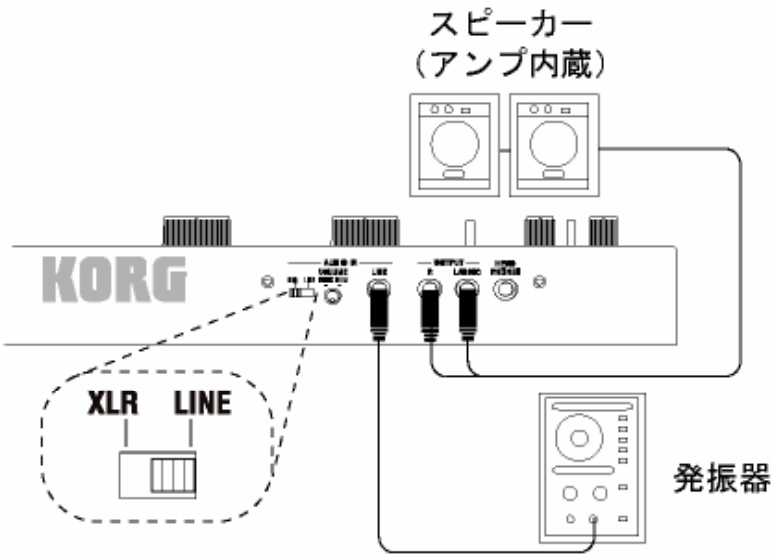

Make the level of oscillator bigger, sound is produced from the speakers.
Confirm that when you rotate the AUDIO IN LEVEL from MIN to MAX, the sound level changes smoothly. Then set it to the MAX position.
Confirm that when you rotate the VOLUME from MIN to MAX, the sound level changes smoothly. Then set it at the MAX position.
Press the [EXIT/SHIFT] and the check proceeds to the next.

6-2) DAC MUTE check

"DAC MUTE" is displayed in the upper line of the LCD, "CHK-MUTE" is displayed in the lower line of the LCD.

Confirm that you cannot hear the sound from the speaker.
After the confirmation, make the oscillator level smaller and press the [EXIT/SHIFT] then the check proceeds to the next.

7. PANEL check

7-1) All LEDs light.
"ALL LED" is displayed in the LCD and all LEDs light (at following colors).
Confirm that there is not unevenness of brightness.
OCTAVE UP: red, OCTAVE DOWN: red
Others: orange
After the confirmation, press the [EXIT/SHIFT] and the check proceeds to the next.

7-2) SWITCH and LED check
The LEDs light one by one corresponding to the switches, so press the switches one by one and confirm that the check can proceed to the next LED. (See the following table.)
Confirm that you can move the levers smoothly and you can feel the normal click of switches.
When you press other switch, "NG OTHER" is displayed. When other switch is pressed same time, "NG SHORT" is displayed.

LED	SWITCH / lever
OCTAVE DOWN (red)	OCTAVE lever "DOWN"
OCTAVE DOWN (green)	OCTAVE lever "DOWN"
OCTAVE UP (red)	OCTAVE lever "UP"
OCTAVE UP (green)	OCTAVE lever "UP"
TEMPO	OCTAVE lever "UP"
ARP ON	ARP ON
VOCODER	VOCODER
WRITE	WRITE
EXIT / SHIFT	EXIT / SHIFT
ORIGINAL VALUE	TIMBRE SELECT lever "1"
TIMBRE SELECT 1	TIMBRE lever lever "1"
TIMBRE SELECT 2	TIMBRE SELECT lever "2"

8. BANK SW, ROTARY SW check

"BANK SEL" is displayed in the upper line of the LCD, "BANK-B" is displayed in the lower line of the LCD.

Move the BANK SELECT lever to the "B", "BANK-A" is displayed in the lower line in the LCD.
Move the BANK SELECT lever to the "A", confirm that the lever does not return to the center position.

"GENRE1<<" is displayed in the upper line of the LCD, "D'N' B/BR" is displayed in the lower line of the LCD. Rotate the PROGRAM GENRE dial to the left for one click slowly.
"HOUSE/DI" is displayed in lower line of the LCD. At this time confirm that the dial has click feeling and you can move smoothly.

Rotate the PROGRAM GENRE dial to the left by one click until the "1" position slowly.

"CATEG1<<" is displayed in the upper line of the LCD, "SE/HIT" in the lower line.

Rotate the PROGRAM CATEGORY dial to the left for only one click.
"KEYBOARD" is displayed in the lower line of the LCD.
At this time confirm that the dial has click feeling and you can move smoothly.

Rotate the PROGRAM CATEGORY dial to the left until the “1” position slowly.

“EDIT1<<” is displayed in the upper line of the LCD, “ARP” in the lower line.
Rotate the EDIT SELECT dial to the left for only one click.
“EFFECT” is displayed in the lower line of the LCD.
At this time confirm that the dial has click feeling and you can move smoothly.

Rotate the EDIT SELECT dial to the left until the “ASSIGN” position slowly, then the check proceeds to the next check.
When more than 2clicks are counted by some mistake or the count becomes minus all LEDs blink.

9. A/D check

“TEMPO” is displayed in the upper line of the LCD.

Operate by the order of the check table.
Rotate the VR knob from the minimum to near center position, then shake the knob both left and right direction lightly, confirm that the value which is displayed in the lower line of the LCD does not change big different value.
Next rotate to the right and when the value exceeds the maximum reference value “H” is displayed beside its value in the lower line of the LCD.
Rotate to the left when the value exceeds the minimum reference value the check proceeds to the next VR.

Confirm that the A/D value which is displayed in the lower line of the LCD changes smoothly corresponding to the moving of the VR.
Confirm that the moving of the VR is smooth.
When any value of other VR was changed by some error or mistake, all LEDs blink.
All VR checks are passed, the check proceeds to the next.
“ERR SHORT” is displayed in the LCD when other A/D value was changed.
VR check order

VR
TEMPO
KNOB 1
KNOB 2
KNOB 3

10. LCD check

10-1 All segments are displayed
All segments of the LCD are displayed, confirm that you can see all segments like the figure.



Confirm that backlight LED is lighting.

10-2 No segment is displayed.
Press the [EXIT/SHIFT], and then confirm that no segment is displayed.

10-3 Alternate segments are displayed.
Press the [EXIT/SHIFT], then confirm that the LCD displays fig 1 and fig 2 alternately.
When some segment is displayed continuously or some segment is not displayed, it is NG.

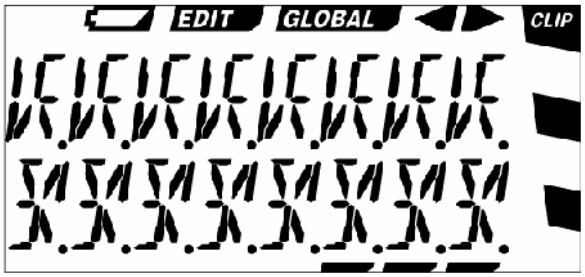

Fig.1

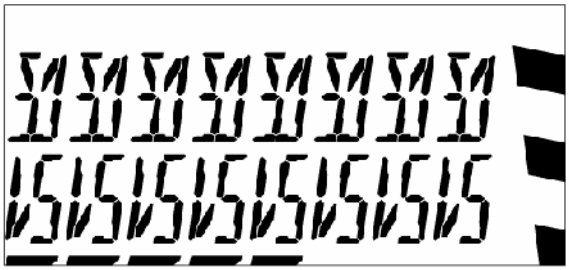

fig.2

Confirm that the backlight LED is turned off.
Press the [EXIT/SHIFT] and the check proceeds to the next.

11. WHEEL check

11-1 Pitch Bend Wheel check
"PITCHBEND" is displayed in the upper line and "-___+___" is displayed in the lower line of the LCD, and the OCTAVE DOWN LED is turned on.
When you rotate the Pitch Bend wheel, "-(minimum value)"in the lower line and "+(maximum value)" in the upper line of the LCD are displayed.
Rotate the wheel until both real ends of the wheel, confirm that both MAX and MIN values are recognized and you can move it smoothly.
After both the MIN and the MAX value are recognized [WRITE] LED is turned on.
Remove your hand from the wheel and confirm that the wheel returned to the center position.
Press the [WRITE] and the data of the calibration are written then the check proceeds to the next.
You can not press the [WRITE] when the value is not the center reference value.
During the writing [WRITE] is displayed in the lower line of the LCD and never turn the power off for this while.

11-2 Modulation Wheel check
"MOD WHEL" is displayed in the upper line and "-___+___" is displayed in the lower line of the LCD, and the OCTAVE UP LED is turned on.
When you rotate the Modulation wheel, "-(minimum value)"in the lower line and "+ (maximum value)" in the upper line of the LCD are displayed.
Rotate the wheel until both real ends of the wheel, confirm that both MAX and MIN values are recognized and you can move it smoothly.
After both the MIN and the MAX value are recognized [WRITE] LED is turned on.
Set the wheel at the MIN position.
Press the [WRITE] and the data of the calibration are written then the check proceeds to the next.
During the writing [WRITE] is displayed in the lower line of the LCD and never turn the power off for this while.

12. Keyboard check

"NEXT KEY" is displayed in the upper line and "C6" is displayed in the lower line of the LCD.
Play from the C6 key to the lowest key one by one in middle strength.
The key you should play next is displayed in the lower line of the LCD
When you play the key which is displayed the sound is heard from the speaker.
When you play some different key which is not checked, you cannot hear the sound.
When you play some different key which is already checked, you can hear the sound.

When its velocity is too big although you play some key in middle strength, TMBER SELECT "2" LED blinks and the check can not proceed to the next.
You play from the key which is displayed and the velocity is too big again, the key is NG.

When its velocity is too small although you play some key in middle strength, TMBER SELECT "1" LED blinks and the check can not proceed to the next.
You play from the key which is displayed and the velocity is too small again the key is NG.

When you play a different key which is not displayed, the TIMBER SELECT "1" and "2" are blinking and the check can not proceed to the next.
You play from the key which is displayed and the TIMBER SELECT "1" and "2" are blinking again, the key is NG.

The OCTAVE LED "DOWN" means that the first contact is on, and the "UP" means that the second contact is on.

When you want to do the keyboard check again, press the [VOCODER] switch.
After all keyboard check has completed, [QUIT?] is displayed in the upper line and "[EXIT]ON" in the lower line of the LCD.

Press the [EXIT/SHIFT] and the MKXL restarts and in the normal operation.
Do not continue to play some key or play twice.

13. Demo check

After the restart in the normal operation, pressing the [EXIT/SHIFT] and press the [ARP ON] then the Demo mode starts.
Confirm the sound is normal.
After your confirmation, press [EXIT/SHIFT] and the demo mode finishes.

14. USB check

You need to install the KORG USB MIDI driver to the PC. (See owner's manual.)
After power on, connect MKXL to the PC by a USB cable.
(This is different by OS, following is in case of Windows XP)
MyComputer-[right click]-Property-(SystemProperty)-Hardware-DeviceManager

Confirm that USB Audio device or KORG microKORG XL driver is displayed in "Sound, Video, and GameController".

15. Microphone check

Pull out all cables except power cable, connect accessory microphone to the XLR jack on the panel. Set the LINE/XLR switch on the rear to “XLR” position.
Pressing the [EXIT/SHIFT] and press the [VOCODER] to set the audio-through status.

Connect the headphones to the HEADPHONES jack. Adjust the AUDIO LEVEL knob and confirm that the voice from the microphone is heard.
At this time confirm that big hum sound is not heard when you touch the microphone.

After the confirmation disconnect the microphone. Turn the power off and pull out the power cable.
XLR check
Do the check of conduction from #1pin of the XLR connector to the screw of the rear jack using a tester.

16. BATTERY check

Set to 18V range of the regulated power supply.
1:9.0V, 2: 6.6V, 3: 6.0V
Do not connect the COM terminal and the GND terminal of the power supply.

Connect the dummy battery to the power supply, and insert it to the battery box of the MKXL.
When you can not prepare the dummy battery, connect the power supply to the battery terminals (+ and -) of MKXL directly.

Set the current meter (VOAC 7412) **.***[A] display (press the RANGE[UP] for five times).
Set the power supply to “1”(9.0V) and press the OUTPUT of the power supply.

Turn the power on MKXL.
Confirm that big noise is not heard when power on.

Set the power supply to “2”(6.6V) and confirm that the  icon is turn on.

Set the power supply to”3”(6.0V) and confirm that the  icon is blinking.

Set the power supply to “1”(9.0V) and confirm that the  icon is turned off.
Confirm at this time current is within 200mA – 280mA.

After confirmation, turn the power off and disconnect all cables and pull out the dummy battery.

Check item	LCD Error Message	Meaning of Error
SDRAM Check	"SDRAM-NG" "CS Err! "	CS Error
	"SDRAM-NG" "AB Err! "	A-BUS Error
	"SDRAM-NG" "DB Err! "	D-BUS Error
	"SDRAM-NG" "SizeCell"	Size (Cell) Error
CPU terminal check	"CPU ERR." "ppp->PPP"	CPU Pin Short Error #ppp and #PPP are shorted.
Flash ROM check(Check sum)	"SUP.*o* " (*: o"OK " / X"NG") " "	Checksum Error SUP[System User PCM] User area is OK and System or PCM is error.
	"SUP.*** " (*: o"OK " / X"NG") "INIT[WR]"	When this display appeared, press [WRITE] to overwrite all user data by factory data (including wheel calibration data). After this execution do the wheel calibration. To skip [ARP ON] + [EXIT/SHIFT].
	"SUP.*** " (*: o"OK " / X"NG") "EXTRT ER"	When executing initialize of user data, EXTRACT error
	"SUP.*** " (*: o"OK " / X"NG") "SUM ERR "	When executing initialize of user data, Checksum error
	"SUP.*** " (*: o"OK " / X"NG") "WR ERROR"	When executing initialize of user data, Write error
Flash ROM check(Wr/Rd)	"SUP.*** " (*: o"OK " / X"NG") "ERS ERR "	Erase Error
	"SUP.*** " (*: o"OK " / X"NG") "WR ERROR"	Write Error
	"SUP.*** " (*: o"OK " / X"NG") "CMP ERR "	Compare Error
DSP check	" "DSP " " "HINTTout"	HPI Write/Read, waiting for SDRAM HINT
	" "DSP " " "WR VERFY"	HPI Write Error
	" "DSP " " "RD VERFY"	HPI Read Error
	" "DSP " " "SD START"	SDRAM check does not start
	" "DSP " " "SD UNFIN"	SDRAM check completed unusual
	" "DSP " " "SD D-BUS"	SDRAM D-BUS Error
	" "DSP " " "SD A-BUS"	SDRAM A-BUS Error
DSP check	" "DSP " " "SD SIZE "	SDRAM size Error
	" "DSP " " "SD ?????"	SDRAM unknown Error
	" "DSP " " "GP7 STT "	GPIO7 check does not start.
	" "DSP " " "GP7 SHRT"	GPIO7 short Error
	" "DSP " " "GP7 ????"	GPIO7 unknown Error
	" "DSP " " "RST GP4 "	GPIO4 not ready
	" "DSP " " "RST HINT"	HINT not ready
DSP check(Codec Reset check)	" "DSP " " "RST ERR!"	Codec Reset Pin short or open Error
	" "DSP " " "ACK ERR!"	Audio Clock Signal short or Error
DSP check (DRO check)	" "DSP " " "DRO ERR!"	DRO Pin short or open Error
LCDRAM check	"LCDRAM" "LCD CG:x"	CGRAM Error
	"LCDRAM" "LCD DD:x"	DDRAM Error
Input level check	" HP==XLR" "H>I.****"	Headphone Output / XLR Input Level Error ****: Input Level
	"L/R==-/I" "R>I.****"	LINE Input from OUTPUT-R Level Error ****: Input Level
	"L/R==-/I" "LXI.****"	OUTPUT-L Cross Talk Error ****: Input Level
	"L/R==I/C" "L>I.****"	LINE Input from OUTPUT-L Level Error ****: Input Level
	"L/R==I/C" "RXI.****"	OUTPUT-R Cross Talk Error ****: Input Level
MIDI Loop check	" "MIDI "" "MDLOOP:x"	can't Receive Error
	" "MIDI "" "MDVRFY:x"	Receive Data Error

KORG microKORG XL Parts List

Part Number	Category	Part Name	Location	Reference	QTY
510402511003	EMI/EMC PART	BLM18BD102SN1D (S)	KLM-2879	[TOP] L1-L26	26
510300510505	DIGITAL TR	FP1L2Q-T2B-A (TS) (S)	KLM-2879	[TOP] DT1, DT2	2
510300511009	DIGITAL TR	DTC114EKA T146 (TS) (S)	KLM-2879	[TOP] DT3, DT4, DT5, DT6, DT7, DT8, DT9	7
510310510501	DOUBLE DIODES	MC2838-T112-1 (S)	KLM-2879	[TOP] WD1, WD2, WD3	3
510310511507	DIODE	RLS-73 TE-11 (S)	KLM-2879	[TOP] D2, D3, D4, D5, D6, D7	6
510320516008	Logic IC	SN74LV138APWR	KLM-2879	[TOP] IC1	1
510320516023	Logic IC	SN74LV4053APWR (S)	KLM-2879	[TOP] IC2	1
510312523502	LED	LTL1BEKVJNN	KLM-2879	[TOP] LED9, LED10	2
510312523505	LED	LTL-1CHA (AMBER DIFFUSED)	KLM-2879	[TOP] LED1, LED2, LED3, LED4, LED5, LED6, LED7, LED8	8
510360520025	ROTARY VR	RK09K1130CA8 (5KB W.O/CC H:25MM)	KLM-2879	[TOP] VR1, VR3, VR4, VR5	4
510360520031	ROTARY VR	RK12L12C0C0H (10KB ST W.O/CC H:25mm)	KLM-2879	[TOP] VR2	1
510370520506	ROTARY SW	S171FV116GFE0AN09	KLM-2879	[TOP] SW1	1
510370520505	ROTARY SW	S171FV118GFE0AN09	KLM-2879	[TOP] SW2, SW3	2
510374520021	TACT SW	SKRGAQD010	KLM-2879	[TOP] SW7, SW8, SW9, SW10	4
510374522018	TOGGLE SW	TS-22E01-AC18-NI	KLM-2879	[TOP] SW5	1
510374522024	TOGGLE SW	TS-23E02-AC18-NI	KLM-2879	[TOP] SW4, SW6	2
510450523007	LED SPACER	LEDH-12 (D)	KLM-2879	[TOP] LEDH1-LEDH10	10
510474528005	CONNECTOR	A2001WV2-6P	KLM-2879	[BOT] CN4A	1
510470524014	HARNESS	HNS-3857 (7pin 120mm)	KLM-2879	[BOT] CN6B	1
510470524015	FLAT CABLE	HNS-3854 (34pin 90mm)	KLM-2879	[BOT] CN8B	1
500402007100	INDUCTOR	PLT09HN2003R0P1B	KLM-2881	[TOP] L18	1
510402510501	INDUCTOR	R12A163EA C6-K3.0L R12W228EA (10UH)	KLM-2881	[TOP] L8	1
510402510503	INDUCTOR	C13-K4.5L 22UH W312EE (S)	KLM-2881	[TOP] L9	1
510402511003	EMI/EMC PART	BLM18BD102SN1D (S)	KLM-2881	[TOP] L1-L7, L10-L17, L19-L22 [BOT] L23-L68	65
510210510001	EMI/EMC PART	USB USBUF01W6 (S)	KLM-2881	[BOT] EMI1	1
510300510503	TRANSISTOR	2SA812-T1B-A M5-7 M6 RANK(S)	KLM-2881	[BOT] Q1	1
510306510502	POWER MOS FET	SI4431ADY	KLM-2881	[TOP] F1	1
510310510502	DOUBLE DIODES	MC2840-T112-1 (S)	KLM-2881	[BOT] WD1, WD3, WD4, WD5, WD6, WD7	6
510310511501	DIODE	1SR154-400 TE25 (PMDS) (S)	KLM-2881	[BOT] D2, D4, D5	3
510310511502	DIODE	1SS355 TE17 (S)	KLM-2881	[BOT] D3	1
510310511506	SCHOTTKY DIODE	RB051L-40TE25 (S)	KLM-2881	[TOP] D1	1
510320510510	Logic IC	HD74LV2GU04AUSE-E-Q	KLM-2881	[BOT] IC12, IC13, IC22	3
510320514007	LDO IC	BA05FP E2 (S)	KLM-2881	[BOT] IC17	1
510320514026	LDO IC	BD00KA5WF	KLM-2881	[BOT] IC18	1
510320516101	DCDC Controller	TPS40200	KLM-2881	[BOT] IC23	1
510320514028	REGULATOR IC	BA15BC0FP	KLM-2881	[TOP] IC9	1
510320514041	RESET IC	BU4330G-TR	KLM-2881	[TOP] IC4	1
510320514034	RESET IC	BD4838G-TR	KLM-2881	[TOP] IC10, IC11	2
510320516010	Logic IC	SN74LV05APWR (S)	KLM-2881	[BOT] IC19	1
510320516038	Logic IC	SN74LVC1G08DCKR DCK6	KLM-2881	[TOP] IC8	1
510320516092	Logic IC	SN74LVC1G126DCKR	KLM-2881	[TOP] IC7 [B	1
500324018021	A/D Converter	AK5358AET-E2	KLM-2881	[BOT] IC14	1
510324038010	D/A Converter	AK4384ET-E2	KLM-2881	[BOT] IC15	1
500330003700	PHOTO COUPLER	PS9117A-F3-AX(M)	KLM-2881	[BOT] PC1	1
510320516070	DSP	TMS320VC5501PGF300	KLM-2881	[TOP] IC1	1

Part Number	Category	Part Name	Location	Reference	QTY
500320004715	CPU	HD6417705F100BV	KLM-2881	[TOP] IC5	1
500324006013	SDRAM	V54C3128164VBI7(TP)	KLM-2881	[BOT] IC16, IC21	2
500320049011	FLASH(NOR)	M29W160EB70N6E (X-6140)	KLM-2881	[BOT] IC20	1
510335520007	CRYSTAL	HC-49US 20.000MHZ (D)	KLM-2881	[TOP] X1	1
510335520011	CRYSTAL	HC-49US 12.00MHZ (D)	KLM-2881	[TOP] X3	1
510335552008	CRYSTAL	HC-49US 24.576MHZ SS (D)	KLM-2881	[TOP] X2	1
510374520007	POWER SW	PSW SDKLA10200 (D)	KLM-2881	[TOP] SW2	1
510450520506	DIN JACK	DS-05-02(DIN5P W/OUT SW) (D)	KLM-2881	[TOP] MIDI1, MIDI2	2
510474527501	USB CONNECTOR	QT-6301-004 (B TYPE)	KLM-2881	[TOP] USB1	1
510450524509	DC JACK	LD-0214	KLM-2881	[TOP] DJ1	1
510474521006	CONNECTOR	302AE34PGAS003 (BOX CONNECTOR)	KLM-2881	[BOT] CN8A	1
510474528002	CONNECTOR	A2001WV2-3P	KLM-2881	[BOT] CN1A	1
510474528010	CONNECTOR	A2001WV2-11P	KLM-2881	[BOT] CN3A	1
510474528011	CONNECTOR	A2001WV2-12P	KLM-2881	[BOT] CN2A	1
510474528015	CONNECTOR	A2001WV2-16P	KLM-2881	[BOT] CN100A	1
510300511504	TRANSISTOR	2SC3661-TB-E (S)	KLM-2882/2883/2382	[KLM-2882 TOP] Q1, Q2, Q3, Q4	4
510320516082	OPAMP	TLV2362IDR	KLM-2882/2883/2382	[KLM-2882 TOP] IC2, IC4	2
510324038005	OPAMP	TDA1308T/N2 (S)	KLM-2882/2883/2382	[KLM-2882 TOP] IC1	1
510374522002	SLIDE SW	SK-22D06G8 2P2T (D)	KLM-2882/2883/2382	[KLM-2882 TOP] SW1	1
510402511003	EMI/EMC PART	BLM18BD102SN1D (S)	KLM-2882/2883/2382	[KLM-2882 TOP] L1, L2, L3, L4, L6, L7, L8 [KLM-2883 TOP] L9, L10, L11	10
510450521503	PHONE JACK	YKB21-5074G (PHONE JACK) (D)	KLM-2882/2883/2382	[KLM-2882 TOP] PH1, PH2, PH3, PH5	4
510450524507	XLR JACK	LX-1604H-3	KLM-2882/2883/2382	[KLM-2883 TOP] XLR1	1
510360520032	ROTARY VR	RK09D1110C1G (50KA side type)	KLM-2882/2883/2382	[KLM-2882 TOP] VR2	1
510474528002	CONNECTOR	A2001WV2-3P	KLM-2882/2883/2382	[KLM-2882 TOP] CN7A [KLM-2883 TOP] CN7B	2
510474528006	CONNECTOR	A2001WV2-7P	KLM-2882/2883/2382	[KLM-2882 TOP] CN6A	1
510474528011	CONNECTOR	A2001WV2-12P	KLM-2882/2883/2382	[KLM-2882 TOP] CN2B	1
510470524017	HARNESS	HNS-3856 (3pin 250mm)	KLM-2882/2883/2382	[KLM-2382 Top] CN1	1
510300511005	DIGITAL TR	DTC114EUA T106 (S)	KLM-2884	[BOT] DT1	1
510320516014	Logic IC	SN74AHCT244PWR (S)	KLM-2884	[BOT] IC1	1
510320516013	Logic IC	SN74LV126APWR (S)	KLM-2884	[BOT] IC2	1
510320511002	DISPLAY IC	NJU6468FG1-00-#ZZZB (S)	KLM-2884	[BOT] IC3	1
510312512016	Chip LED	SML-A12Y8T (side type)	KLM-2884	[TOP] LED1, LED2	2
510470524016	HARNESS	HNS-3853 (11pin 90mm)	KLM-2884	[BOT] CN3B	1
510C15462879	PCB	KLM-2879 ASS'Y X-6140 MKXL	panel		(1)
510C15462881	PCB	KLM-2881 ASS'Y X-6140 MKXL	main		(1)
510C15462882	PCB	KLM-2882/2883 ASS'Y MKXL	jack/XLR		(1)
510C15462884	PCB	KLM-2884 ASS'Y X-6140 MKXL	LCD		(1)
510C15462382	PCB	KLM-2382 ASS'Y X-6140 MKXL	battery		(1/8)
510470524018	HARNESS	HNS-3855 (6pin 130mm)			1
510470524019	HARNESS	HNS-3858 (3pin 120mm)			1
510470524020	HARNESS	HNS-3859 (12pin 200mm)			1
510470524021	HARNESS	HNS-3860 (16pin 170mm)			1
510470524022	HARNESS	HNS-3866 1pin 150mm)			1
510313500014	LCD	DLC-90232G4GF			1
510C1546	KEYBOARD UNIT	MK-37 ASSY			1
510360520005	ROTARY VR	RK1631110G1T 10K B CURVE (D)			2

Part Number	Category	Part Name	Location	Reference	QTY
510405540027	SWITCHING ADAPTER	KA350 (@3A-161WP09-158)			1
510540502501	AC PLUG	PSE/UL Plug @060-161WP00-004		100JP,120US,120CN,120EX	(1)
510540502502	AC PLUG	EU Plug @060-161WP00-002		230GE,230FR,230WG	(1)
510540502503	AC PLUG	UK Plug @060-161WP00-009		230UK	(1)
510540502504	AC PLUG	SAA Plug @060-161WP00-003		240AU	(1)
510640505503	Mechanical Part	X-1110 WHEEL ANGLE KOC-C41269			2
510640504016	Mechanical Part	X-1110 WHEEL SPRING KOC-C41278			1
510640504017	Mechanical Part	X-1110 BATTERY SPRING(-)C41276			1
510640504015	Mechanical Part	X-1110 BATTERY SPRING(+)C41277			1
510640504040	Mechanical Part	X-550M BATTERY SPRING(W)C41491			5
510640500021	Mechanical Part	X-6140 PANEL KOC-C20455			1
510640508045	Mechanical Part	X-6140 JACK PLATE KOC-C30776			1
510640508046	Mechanical Part	X-6140 MAIN PLATE KOC-C30777			1
510640508047	Mechanical Part	X-6140 SIDE PLATE KOC-C41569			4
510640508048	Mechanical Part	X-6140 PCB SPACER KOC-C41570			2
510646502158	Mechanical Part	X-6140 UPPER CASE KOC-E10256			1
510646502159	Mechanical Part	X-6140 LOWER CASE KOC-E10257			1
510646502008	Mechanical Part	X-1110 WHEEL KNOB KOC-E30289			2
510646502163	Mechanical Part	X-6140 PSW KNOB KOC-E40774			1
500646077600	Mechanical Part	X-0400 PLATE KOC-E40525			1