HiFi ENGINE®

For more Hi-Fi manuals and set-up information
please visit www.hifiengine.com

STEREO AMPLIFIER

SA-6700
SA-606

SERVICE MANUAL

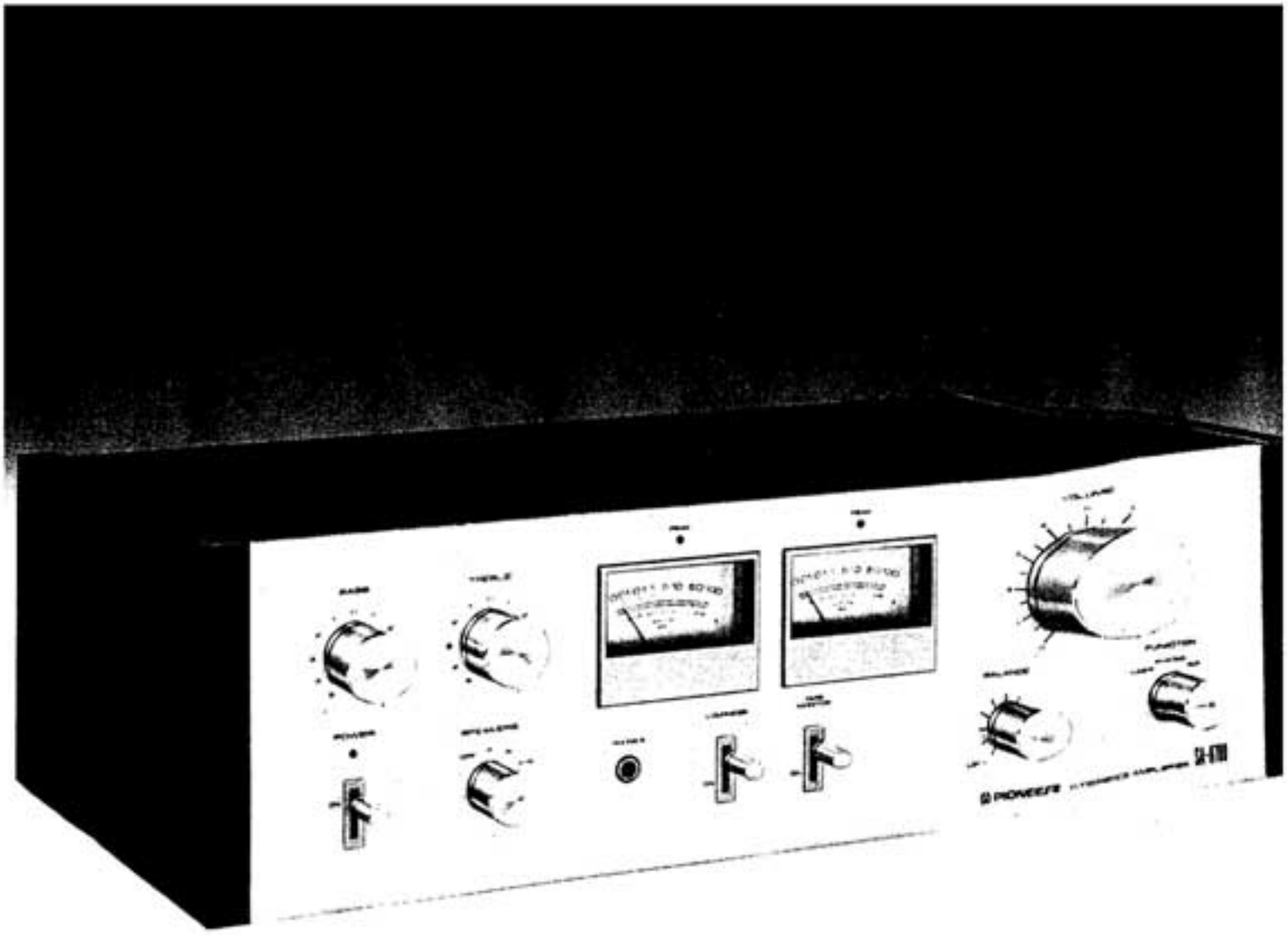

PIONEER

Both Model SA-6700 and Model SA-606 have the same basic performance. SA-6700 has a wooden cover, and SA-606 has a metal cover. The following table is displayed on the SA-6700 and the SA-606.

MODEL SA-6700

Type	Voltage	Remarks
KU	120V only	U.S.A model
KC	120V only	Canada model

MODEL SA-606

Type	Voltage	Remarks
S	110V, 120V, 220V, and 240V (Switchable)	General export model
S/G	110V, 120V, 220V, and 240V (Switchable)	U.S. Military model
HG	220V and 240V (Switchable)	Europe, Oceania model

This service manual is applicable to the SA-6700/KU. When repairing the SA-606, please see the additional service manual (pp. 35–51).

CONTENTS

1. SPECIFICATIONS 3
2. CONNECTION DIAGRAM 4
3. FRONT PANEL FACILITIES 5
4. BLOCK DIAGRAM 7
5. CIRCUIT DESCRIPTION 8
6. DISASSEMBLY 11
7. PARTS LOCATION 13
8. ADJUSTMENTS 15
9. EXPLODED VIEWS 16
10. SCHEMATIC DIAGRAMS, P.C. BOARD PATTERNS AND PARTS LIST
    - 10.1 Schematic Diagram 19
    - 10.2 Miscellanea 21
    - 10.3 AF Assembly (GWK-111) 23

10.4 Input Terminal Assembly (GWX-154) 30
10.5 Volume Assembly (GWX-155) 31
10.6 Tone and Indicator Assembly (AWX-136) 32
11. PACKING 34
12. SUPPLEMENTS FOR KC TYPE 34

ADDITIONAL SERVICE MANUAL

1. SPECIFICATIONS 35
2. CONTRAST OF MISCELLANEOUS PARTS 36
3. SUPPLEMENTS FOR S AND S/G TYPES
3.1 Exploded View 38
3.2 Schematic Diagram 39
3.3 AF Assembly (GWK-110) 41
3.4 Volume Assembly (GWX-153) 45
3.5 Input Terminal Assembly (GWX-152) 46
3.6 Tone and Indicator Assembly (AWX-135) 47
4. SUPPLEMENTS FOR HG TYPE
4.1 Exploded View 48
4.2 Schematic Diagram 49
4.3 DIN Connector Assembly (AWX-137) 51

1. SPECIFICATIONS

Semiconductors

ICs 2
Transistors 25
Diodes 27

Amplifier Section

Circuitry . . . . . 1-st stage current mirror loaded differential amplifier, constant current loaded all-stage direct-coupled OCL.

Continuous power output is 40watts* per channel, min., at 8ohms from 20Hertz to 20,000 Hertz with no more than 0.05% total harmonic distortion.

Total Harmonic Distortion (20Hertz to 20,000Hertz, from AUX)
continuous rated power output . . .No more than 0.05%
20 watts per channel power output, 8 ohms
. . . . . No more than 0.03%
1 watt per channel power output, 8 ohms
. . . . . No more than 0.03%
Intermodulation Distortion (50Hertz : 7,000Hertz = 4 : 1)
continuous rated power output
. . . . . No more than 0.05%
20 watts per channel power output, 8 ohms
. . . . . No more than 0.02%
1 watt per channel power output, 8 ohms
. . . . . No more than 0.02%

Output
Speaker . . . . . A, B, A+B
Damping Factor
(20Hertz to 20,000Hertz, 8 ohms) 30
Input (Sensitivity/Impedance)
PHONO . . . . . 2.5mV/50 kilohms
TUNER . . . . . 150mV/50 kilohms
AUX . . . . . 150mV/50 kilohms
TAPE PLAY . . . . . 150mV/50 kilohms
Phono Overload Level (T.H.D. 0.05%, 1kHz)
PHONO 180mV
Output (Level/Impedance)
TAPE REC 150mV
Frequency Response
PHONO (RIAA Equalization)
. . . . . 20Hz to 20,000Hz±0.3dB
TUNER, AUX, TAPE PLAY
. . . . . 20Hz to 40,000Hz±2dB
Tone Control
BASS . . . . . +12dB, -10dB (100Hz)
TREBLE . . . . . +10dB, –10dB (10kHz)

Loudness Contour (Volume control set at –40dB position)
. . . . . +6dB (100Hz), +3dB (10kHz)
Hum and Noise (IHF, short-circuited, A network)
PHONO 78dB
TUNER, AUX, TAPE PLAY 95dB

Miscellaneous

Power Requirements 120V 60Hz
Power Consumption . . . . . 150W(UL), 300VA(CSA) 420W(max.)
Dimensions . . . . . 450(W)x148(H)x263(D) mm
17-3/4(W)x5-13/16(H)x10-3/8(D) in
Weight . . . . . Without package; 8.2kg (18lb)
With package; 9.2kg (20lb 4oz)

Furnished Parts

Operating instructions 1

**Measured pursuant to Federal Trade Commission's Trade Regulation rule on Power Claims for Amplifier.*

NOTE:
Specifications and the design subject to possible modification without notice due to improvements.

2. CONNECTION DIAGRAM

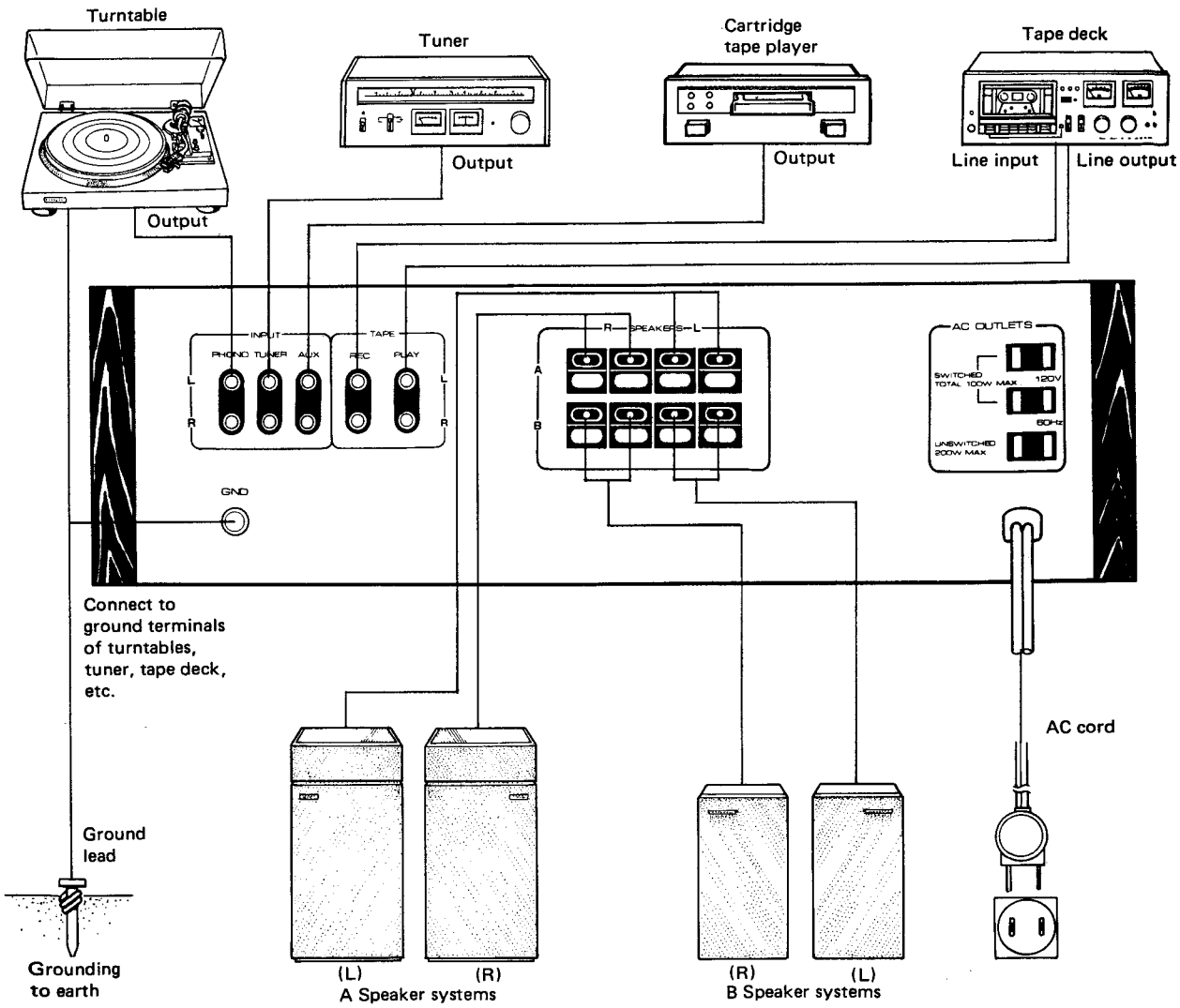

3. FRONT PANEL FACILITIES

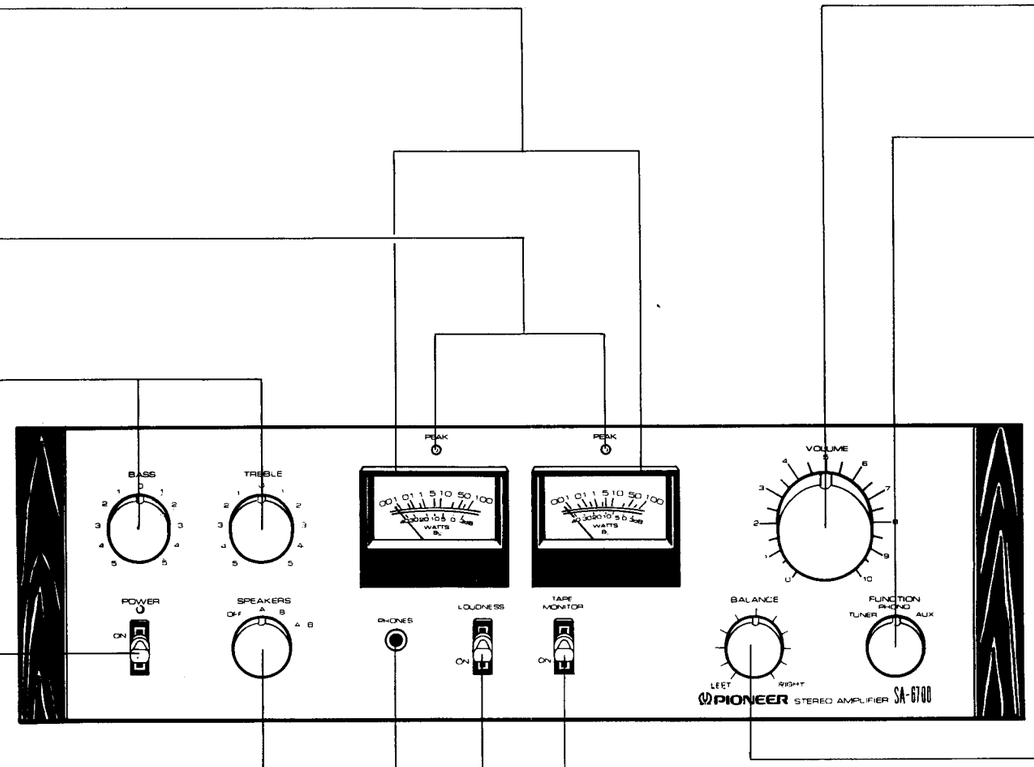

POWER METERS

These power meters allow you to read out the rated power level when speakers with a nominal impedance of 8-ohms are connected to the amplifier's speaker terminals.

NOTE:
These values are related to the impedance of the speakers and they vary according to the frequency. In order to find out the exact output level, connect an 8-ohm dummy load instead of the speakers.

PEAK POWER INDICATORS

These lamps light up when the amplifier's output is at its peak level with 8 ohms load. Turn the VOLUME control to a lower position until the indicator does not light up continuously but only intermittently.

BASS, TREBLE CONTROLS

Adjust the bass with the BASS control and the treble with the TREBLE control. The bass and treble are strengthened when the controls are turned to the right and weakened when turned to the left.

The sound quality of the music source depends on how the sound is absorbed and reflected in the listening room and also on the characteristics of the speakers. You can use these controls to compensate accordingly and adjust the sound to your preference.

POWER SWITCH

Flip this switch to the ON position to supply power to the stereo amplifier.

SPEAKERS SWITCH

Selects speaker system operation.

- OFF: Sound not obtained from speakers (when using headphones).
- A: Sound obtained from speakers connected to A speaker terminals.
- B: Sound obtained from speakers connected to B speaker terminals.
- A + B: Sound obtained from speakers connected to both A and B speakers terminals.

NOTE:
When listening with headphones or to temporarily interrupt the speaker sound, set switch to OFF or to an unused speaker position.

PHONES JACK

When listening with stereo headphones, connect them to this jack.

NOTE:
Set the SPEAKERS switch to OFF when listening only with headphones.

VOLUME CONTROL

Use this control to adjust the output level to the speakers and headphones. Turn it clockwise to increase the output level.

FUNCTION SWITCH

Selects desired playback source.

- TUNER: To listen to broadcasts with a tuner connected to the TUNER jacks.
- PHONO: To play records on a turntable connected to the PHONO jacks.
- AUX: To play a component connected to the AUX jacks.

NOTE:
Turn the VOLUME control down first before selecting a different function switch while the sound from one program source is being reproduced.

BALANCE CONTROL

Use this control to balance the volume of the left and right channels. First, however, tune the AM broadcast, and adjust so that the sound appears to come from somewhere exactly between the two speakers. If the sound appears to be louder on the right, it means that the volume of the right channel is higher. Turn the BALANCE control to the left and adjust. Conversely, if the sound appears to be louder on the left, it means that the volume of the left channel is higher. Therefore, turn the BALANCE control to the right and adjust.

TAPE MONITOR SWITCH

Set switch to ON with a tape deck which is connected to the TAPE (REC and PLAY) jacks when you want to monitor the playback or recording of a tape.

NOTE:
Set this switch to the upper (off) position when listening to records or a broadcast.

LOUDNESS SWITCH

Set this switch to ON when listening at a low volume. The frequency response of the human ear varies according to the listening volume, and setting this switch to the ON position compensates for hearing response by emphasizing the bass and treble.

4. BLOCK DIAGRAM

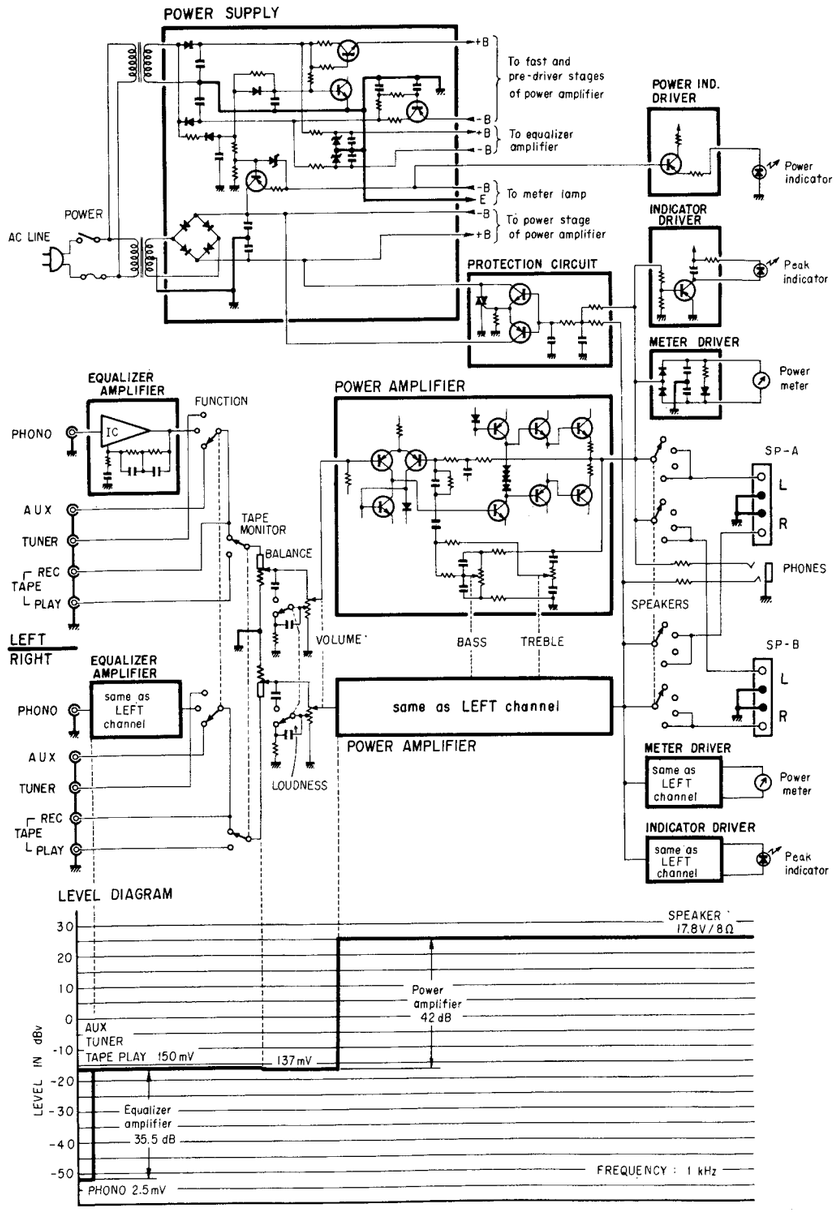

5. CIRCUIT DESCRIPTION

Equalizer Amplifier

The L channel and R channel use one high-performance IC each (TA7136P1). The circuit diagram for one channel is shown in Fig. 1.

The input signal is applied to pin 2 of the IC, and the output signal is taken from pin 6. Pin 3 is the NFB IN terminal. NFB is applied from pin 6. An equalization deviation of ±0.3dB (20Hz~20kHz) has been achieved by using 1%-tolerance metal film resistors at R_1, R_2 and R_3, and 2%-tolerance polystyrene film capacitors at C_2 and C_3. The IC supply voltages are +19V and −18.5V. Allowable input is 180mVrms (f = 1kHz, T.H.D. = 0.05%).

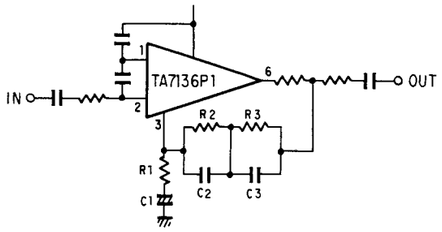

Fig. 1 Equalizer amplifier circuit

Power Amplifier

The power amplifier is an 8-transistor all-stage direct-coupled complementary OCL circuit. The tone control circuit is included in the NFB loop. Its circuit diagram is given in Fig. 2. The first stage is a PNP dual-transistor differential amplifier with current mirror load to achieve low distortion and high gain. The predriver stage has a constant-current circuit as its load to realize high gain. (A voltage gain of 42.35dB is necessary at the power amplifier to obtain a low power amplifier standard input level of 137mV and a 40W/8Ω output at this input level. This voltage gain is obtained with the initial stage and predriver stage.)

The driver stage and output stage comprise a Darlington-connection pure complementary SEPP circuit, and perform power amplification.

Tone control is accomplished by varying the amount of power amplifier AC NFB. VR_1 controls the BASS by varying the amount of low-range NFB. VR_2 controls the TREBLE by varying the amount of high-range NFB.

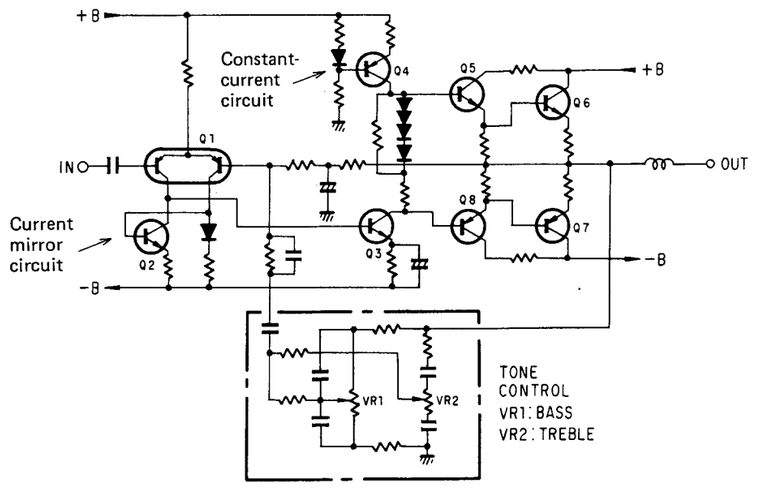

Fig. 2 Power amplifier circuit

Meter Drive Circuit

The meter is a logarithmic compression-type power meter. Direct reading from 0.01~100W (8Ω load) without range switching is possible.

The output signal of the power amplifier is passed through R_1 and full-wave rectified by D_1 and D_2 to a DC voltage (Eo) corresponding to the signal level (Fig. 3). When the output signal of the power amplifier is small, and Eo ≤ V_F, (D_3 forward voltage ≒ 0.6V), the forward resistance of D_3 becomes high and current (I) becomes I ≒ I_B. When the output signal of the power amplifier is large, and $E_O > V_F$, the forward resistance of D_3 becomes low, and current (I) becomes $I = I_A + I_B$.

Since the current (I_A) flowing in D_3 increases with an increase in the output signal of the power amplifier, because of the I_F—V_F characteristic of D_3, the current (I_B) that flows in the meter increases logarithmically instead of linearly. The current flowing in the meter is logarithmically compressed and the meter indicates +3 to −40dB.

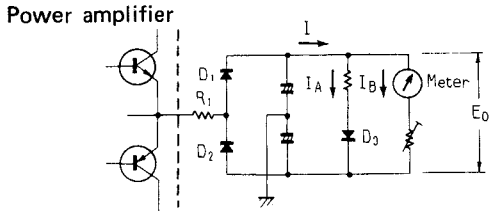

Fig. 3 Meter drive circuit

Peak Indicator Drive Circuit

This circuit lights the peak indicator when the output of the power amplifier has reached the maximum output (approximately 50W, 8Ω). Its circuit diagram is shown in Fig. 4-a.

The output voltage of the power amplifier is divided by R_1 and R_2, and applied to the base of Q_1. Therefore, when the power amplifier output peak voltage (Vip) exceeds a certain value, Q_1 is turned ON and the LED (peak indicator) lights. C_1 prevents lighting of the peak indicator when an extremely narrow pulse component has been applied.

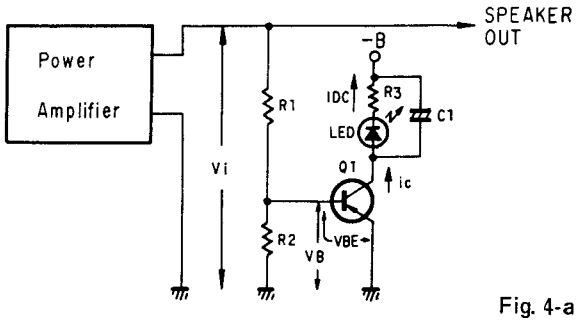

Fig. 4-a

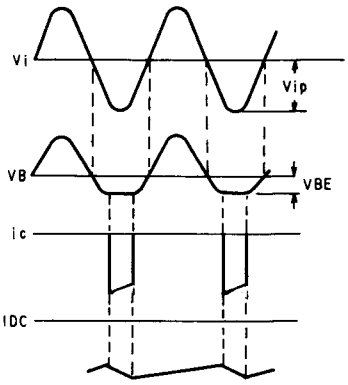

Fig. 4-b

Protection Circuit

This circuit protects the speaker when a DC voltage has been generated at the output of the power amplifier.

When a DC voltage of ±8V has been generated at the output of the power amplifier, the primary side fuse of the power transformer is blown and the supplied power is interrupted within 2 seconds. This circuit is shown in Fig. 5.

D_{26} is a triac, and is turned ON when its gate input is a plus or minus voltage.

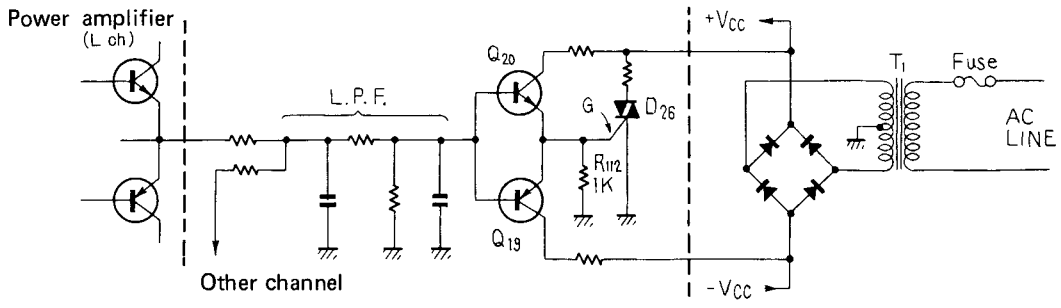

Fig. 5 Protection circuit

The output of the power amplifier is passed through an LPF, and connected to the base of Q_{19} and Q_{20}. Consequently, when the output of the power amplifier is an AC signal (audio signal), it is cut by the LPF. However, when a DC voltage is generated at the output of the power amplifier, it is passed through the LPF and applied to the base of Q_{19} and Q_{20}. Therefore, Q_{20} is turned ON when this DC voltage is positive, and Q_{19} is turned ON when it is negative. When Q_{19} or Q_{20} is turned ON, a plus or minus voltage is generated across R_{112}, this voltage is applied to the gate of D_{26}, and D_{26} conducts. Consequently, a large current flows in the power supply circuit, and the primary side fuse of the power transformer blows.

Power Supply Muting

This muting circuit cuts shock noise and residual sound generated when the power switch is turned ON and OFF. Its circuit is shown in Fig. 6.

Q_{18} is turned ON through the plus supply route (D_{18} — R_{104} — Q_{18} base) from D_{18} for approximately 1 second from the instant the power switch is set to the ON position. (The voltage rise of the minus supply route from D_{19} is delayed because the time constant of R_{93}, C_{69}, R_{99} and C_{72} is larger than the plus supply route from D_{18}.) This holds the base voltage of Q_{17} at 0V, and a minus voltage of −0.6V is applied to the emitter of Q_{17} through R_{102}. Therefore, +B is not supplied, and the power amplifier is held in the cut off state.

The base voltage of Q_{18} becomes −1.5V approximately 1 second after the power switch is set to the ON position (because the minus supply voltage from D_{19} has risen completely). Consequently, Q_{18} is turned OFF, and the base voltage of Q_{17} becomes +40.6V. This supplies +B to the power amplifier first stage and predriver stage, and normal operation begins.

Immediately after the power switch is set to the OFF position, the base voltage (−1.5V) of Q_{18} is discharged through the route R_{98} — R_{97} — D_{20} — C_{72}, and since the residual voltage of C_{68} is then applied to the base of Q_{18} through R_{104}, Q_{18} is immediately turned ON. (The discharge time constant of the minus supply route is made shorter than that of the plus supply by inserting D_{20} to make the discharge time of C_{72} faster.) Therefore, the base voltage of Q_{17} drops to 0V, and the +B supply to the power amplifier is interrupted. Moreover, the charge across C_{59} in the power amplifier is discharged through the route C_{59} — D_{25} — R_{108} — Q_{18}. C_{59} is discharged here to prevent the application of a reverse voltage between the emitter and base of Q_{17} immediately after the power switch is set to the OFF position.

Power Supply Circuit

Adverse effects on the Class A amplifier circuits by power supply voltage variations at high outputs are eliminated by using two power transformers, one for the Class A amplifier circuits (equalizer amplifier and power amplifier first stage and predriver stage) and one for the Class B amplifier circuits (power amplifire driver stage and output stage).

The Class A amplifiers power supply provides DC voltages of +47V and −46V by full-wave rectification. These are dropped to +19V and −18.5V, respectively, through a zener diode and CR filter and supplied to te equalizer amplifier. They are dropped to ±40V by a transistor through a ripple filter and supplied to the power amplifier first stage and predriver stage.

The Class B amplifier's power supply provides DC voltages of ±40V by center-tap bridge rectification, and supplies these voltages to the power amplifier driver stage and output stage. Moreover, the −40V is dropped to −7.5V by a transistor constant-voltage circuit and supplied to the meter lamp.

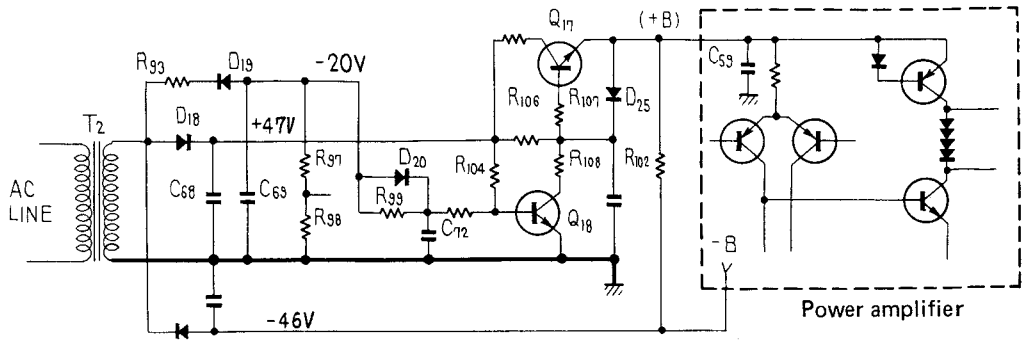

Fig. 6 Power supply circuit

6. DISASSEMBLY

Side Boards and Top Board

1. Remove the 4 screws (❶~❹), and remove the left and right-hand side boards.
2. Remove the 2 screws (❺~❻), and remove the top board.

Bottom Plate

Remove the 4 screws (❼~❿).

Front Panel

Pull off all the knobs, and remove the 4 nuts (⓫~⓮).

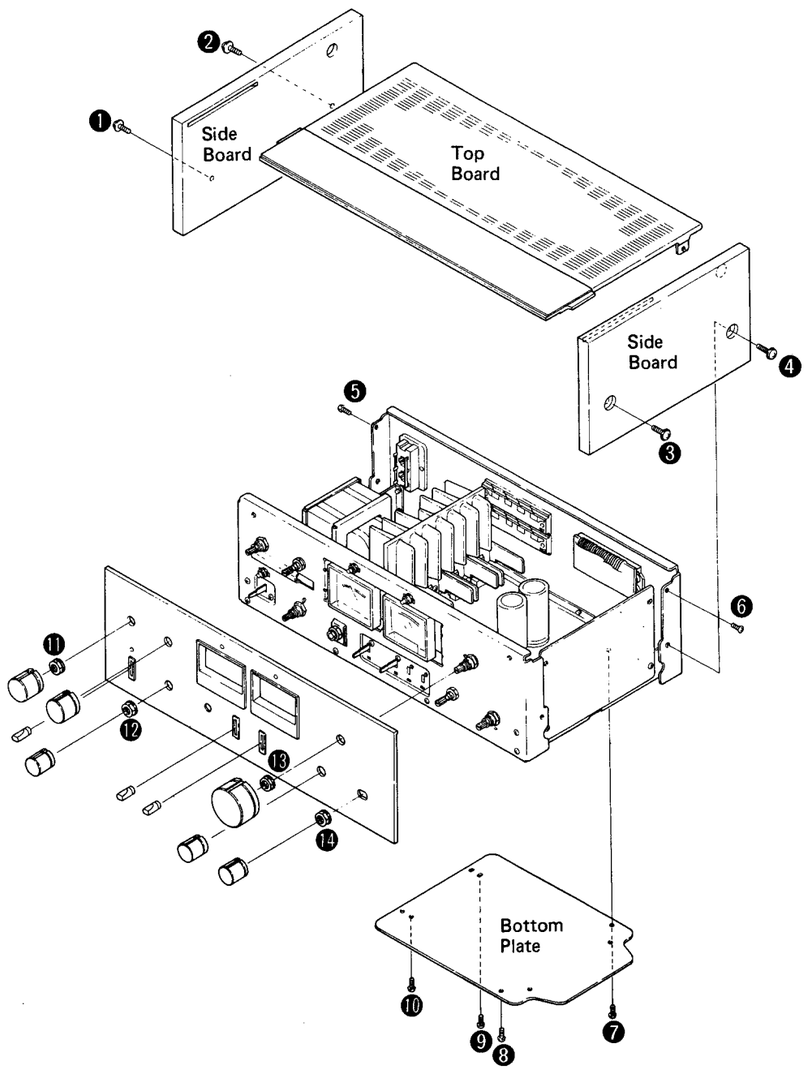

Fig. 7

Heat Sink

Remove the 5 screws (⓯~⓳).

Power Transistor

Remove the 2 screws A and B.

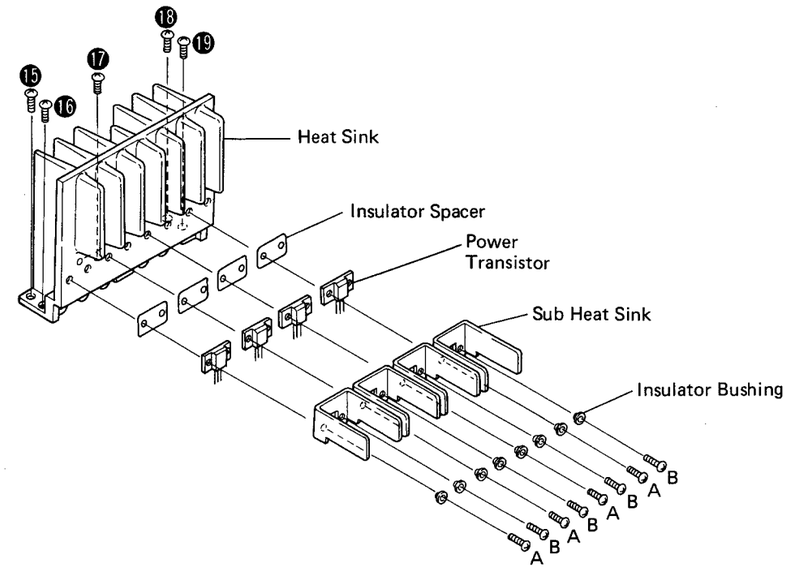

Fig. 8

Meter Lamp Replacement

1. Remove the front panel.
2. Pull the meter from the body (the meter and panel stay are attached with double sided adhesive tape through sponge).
3. Peel off the meter cover tape.
4. Peel off the reflective tape around the outside of the meter.
5. Remove the meter cover.
6. Remove the meter lamp, using a soldering iron.
7. Install the new lamp in the reverse order to removal.

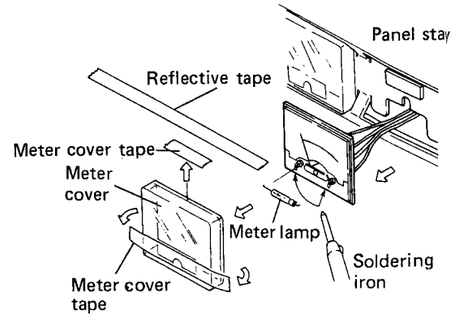

Fig. 9 Meter lamp replacement

7. PARTS LOCATION

Front Panel View

Knob
AAB-179

Front panel assembly
ANB-589

Knob
AAB-178

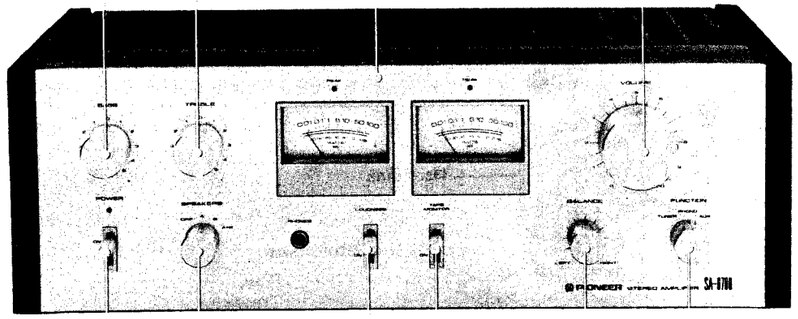

Lever knob assembly
AAD-129

Knob
AAB-180

Lever knob assembly
AAD-129

Knob
AAB-180

Front View with Panel Removed

Variable resistor 100kΩ
(TREBLE)
ACT-117

Power meter
AAW-069

LED (PEAK ind.)
AEL-307

Variable resistor 250kΩ
(VOLUME)
ACV-184

Variable resistor 100kΩ
(BASS)
ACT-117

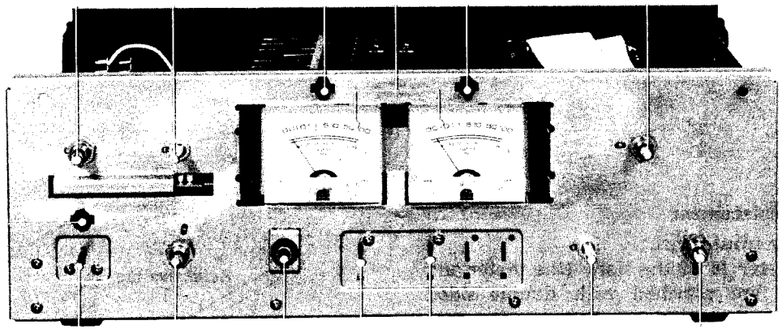

LED (POWER ind.)
AEL-308

Rotary switch (FUNCTION)
ASD-071

Lever switch (POWER)
ASK-066

Variable resistor 500kΩ-HB
(BALANCE)
ACT-118

Rotary switch (SPEAKERS)
ASB-051

Lever switch (TAPE MONITOR)
ASK-122

Phone jack (PHONES)
K72-026

Lever switch (LOUDNESS)
ASK-122

Top View

Power transformer
ATT-487

Fuse 3A
AEK-101

AF assembly
GWK-111

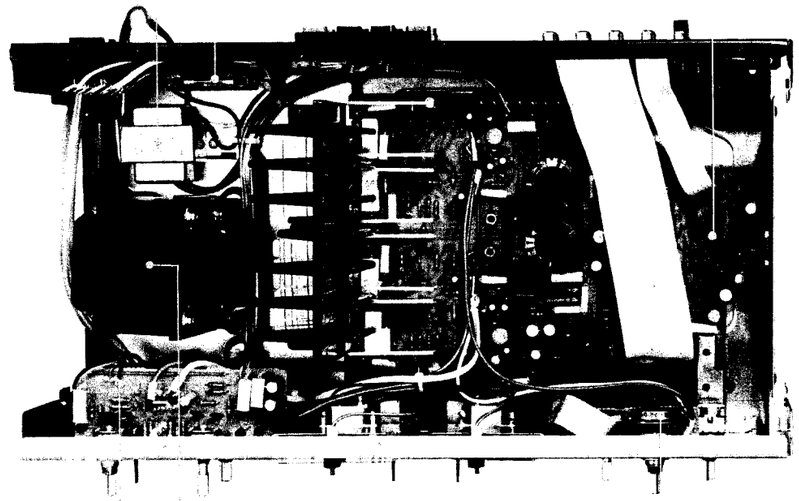

Tone and indicator assembly
AWX-136

Power transformer
AAT-483

Volume assembly
GWX-155

Rear Panel View

Terminal (INPUT)
AKB-028

Terminal (TAPE)
AKB-045

AC socket (AC OUTLETS)
AKP-005

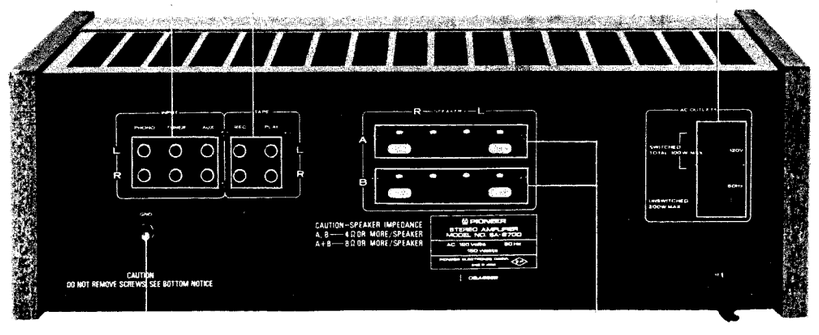

Terminal (GND)
AKE-031

Terminal (SPEAKERS)
AKE-026

8. ADJUSTMENTS

Idle Current Adjustment

1. Set the VOLUME controls to the minimum position, and set the SPEAKER switch to the "A" position.
2. Connect an 8Ω load resistor to speaker terminal A.
3. Connect a DC voltmeter between TP_2 (+) and TP_1 (−) (L channel) of Fig.10. Connect the DC voltmeter between TP_3 (+) and TP_4 (−) at the R channel.
4. Set the power switch to the ON position, and check if the DC voltmeter reading is within the 10 ~ 70mV range. When the voltmeter reading is below 10mV, cut jumper (A) for L channel. Cut jumper (B) for R channel.
5. Disconnect the DC voltmeter, and apply a signal to the input terminals and confirm that there is no crossover distortion in the output waveform.

Meter Circuit Adjustment

1. Set the FUNCTION switch to the AUX position, and the SPEAKER switch to the A position.
2. Connect an AC voltmeter to speaker terminal A (load resistance not connected), and connect an AF oscillator to the AUX terminal, through ATT.
3. Adjust the input level for a reading of 6.32V at the AC voltmeter.
4. Adjust VR_3 (L channel) and VR_4 (R channel) for a reading of −10dB at the power meter.
5. Confirm that the amount of change in the power meter reading almost coincides with the amount of change of ATT when ATT is changed. (Confirm at 0dB, −10dB, −20dB, −30dB, −40dB)

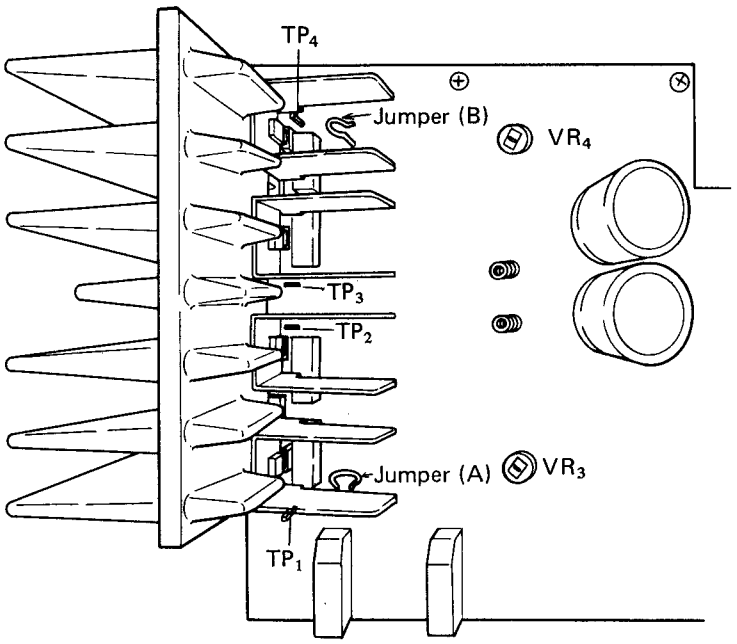

Fig. 10

9. EXPLODED VIEWS

NOTE:
Part indicated in green type cannot be supplied.

External Part

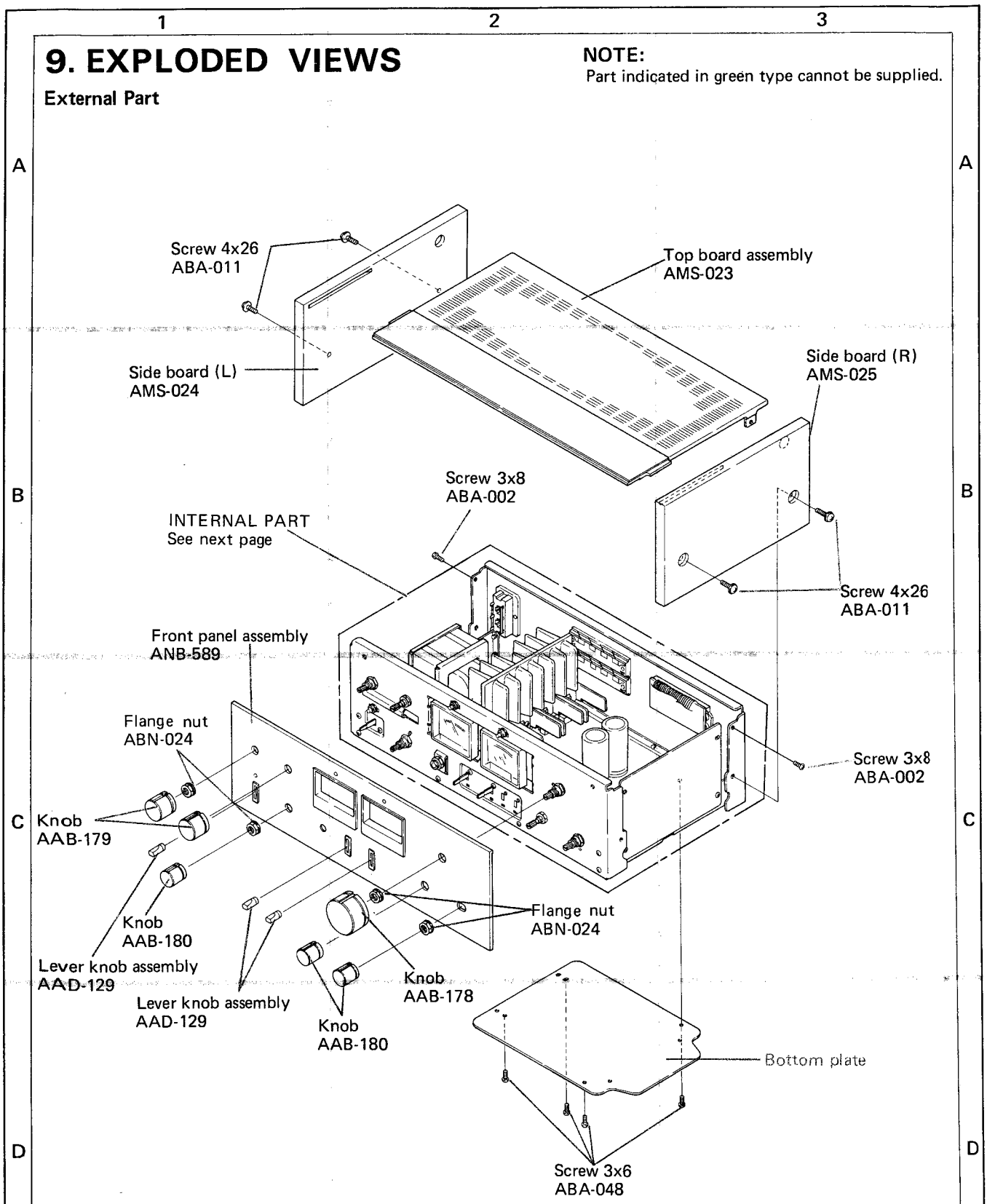

Internal Part

NOTE:
Parts indicated in green type cannot be supplied.

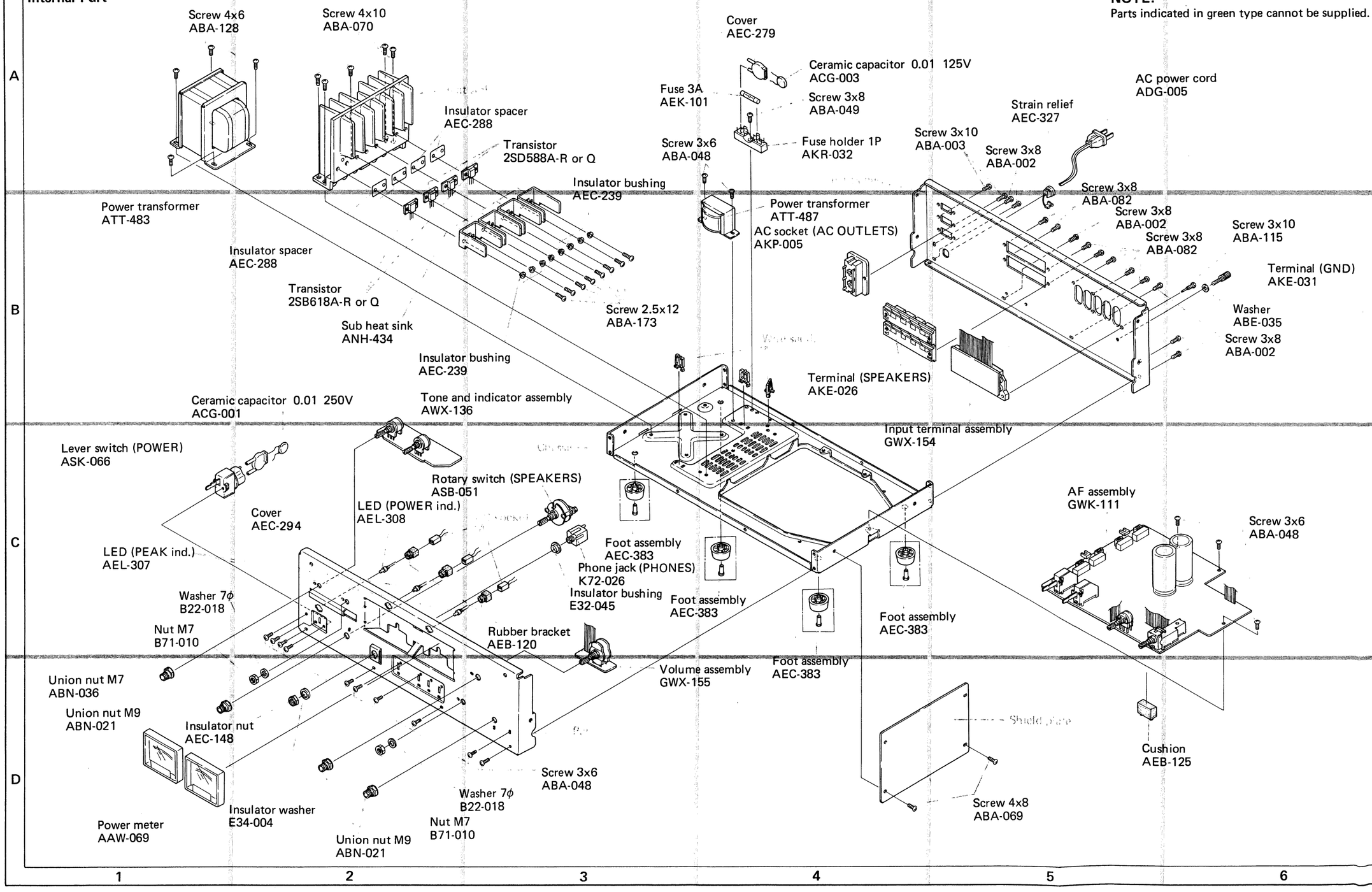

10. SCHEMATIC DIAGRAMS, P.C.BOARD PATTERNS AND PARTS LIST

10.1 SCHEMATIC DIAGRAM

NOTE:
The indicated semiconductors are representative ones only. Other alternative semiconductors may be used and are listed in the parts list.

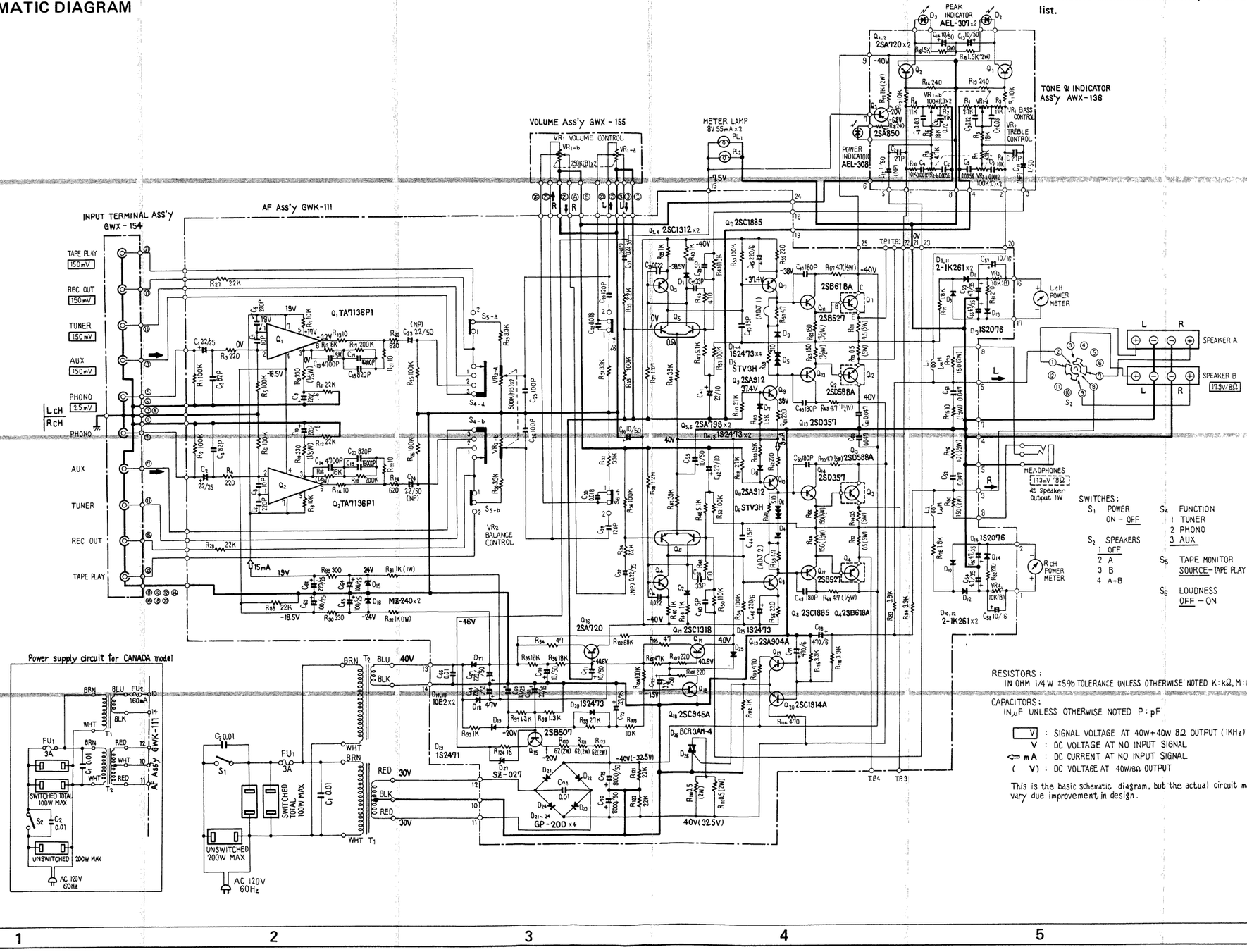

10.2 MISCELLANEA

NOTE:
- *Capacitors: in μF unless otherwise noted p:pF*
- *Resistors: in Ω, ¼W unless otherwise noted k:kΩ, M:MΩ*

Miscellaneous Parts

SWITCHES

Symbol	Part No.	Description
S1	ASK-066	Lever switch (POWER)
S2	ASB-051	Rotary switch (SPEAKERS)

TRANSFORMERS

Symbol	Part No.	Description
T1	ATT-483	Power transformer
T2	ATT-487	Power transformer

CAPACITORS

Symbol	Part No.	Description		
C1	ACG-003	Ceramic	0.01	125V
C2	ACG-001	Ceramic	0.01	250V

SEMICONDUCTORS

Symbol	Part No.	Description
D1	AEL-308	LED (Power indicator)
D2	AEL-307	LED (Peak indicator)
D3	AEL-307	LED (Peak indicator)
Q1	2SB618A-R or Q	Transistor
Q2	2SD588A-R or Q	Transistor
Q3	2SD588A-R or Q	Transistor
Q4	2SB618A-R or Q	Transistor

OTHERS

Symbol	Part No.	Description
FU1	AEK-101	Fuse 3A
PL1	AEL-101	Lamp (with in power meter)
PL2	AEL-101	Lamp (with in power meter)
	AAW-069	Power meter
	AKE-026	Terminal (SPEAKERS)
	K72-026	Phone jack (PHONES)
	AKE-031	Terminal (GND)
	AKP-005	AC socket (OUTLET)
	AKR-032	Fuse holder
	ADG-005	AC power cord
	AWX-136	Tone and indicator assembly
	GWK-111	AF assembly
	GWX-155	Volume assembly
	GWX-154	Input terminal assembly

NOTE:

List of changed parts information will be furnished whenever necessary and you are requested to amend parts number in this parts list.

List of Changed Parts for Factory Modification

Symbol	Part No.	Description

External Appearance of Transistors and IC

2SA720
2SC1318
2SC945A



2SB618A
2SD588A

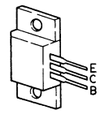

2SC1885
2SA912

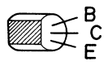

2SB527
2SD357

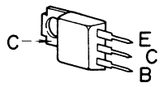

2SC1312
2SA904A
2SC1914A



2SB507

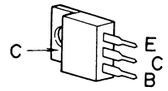

TA7136P1

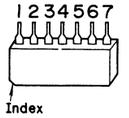

2SA798

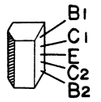

2SA850



Circuit Diagram of IC

TA7136P1

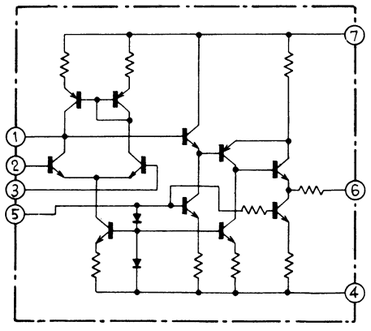

10.3 AF ASSEMBLY (GWK-111)

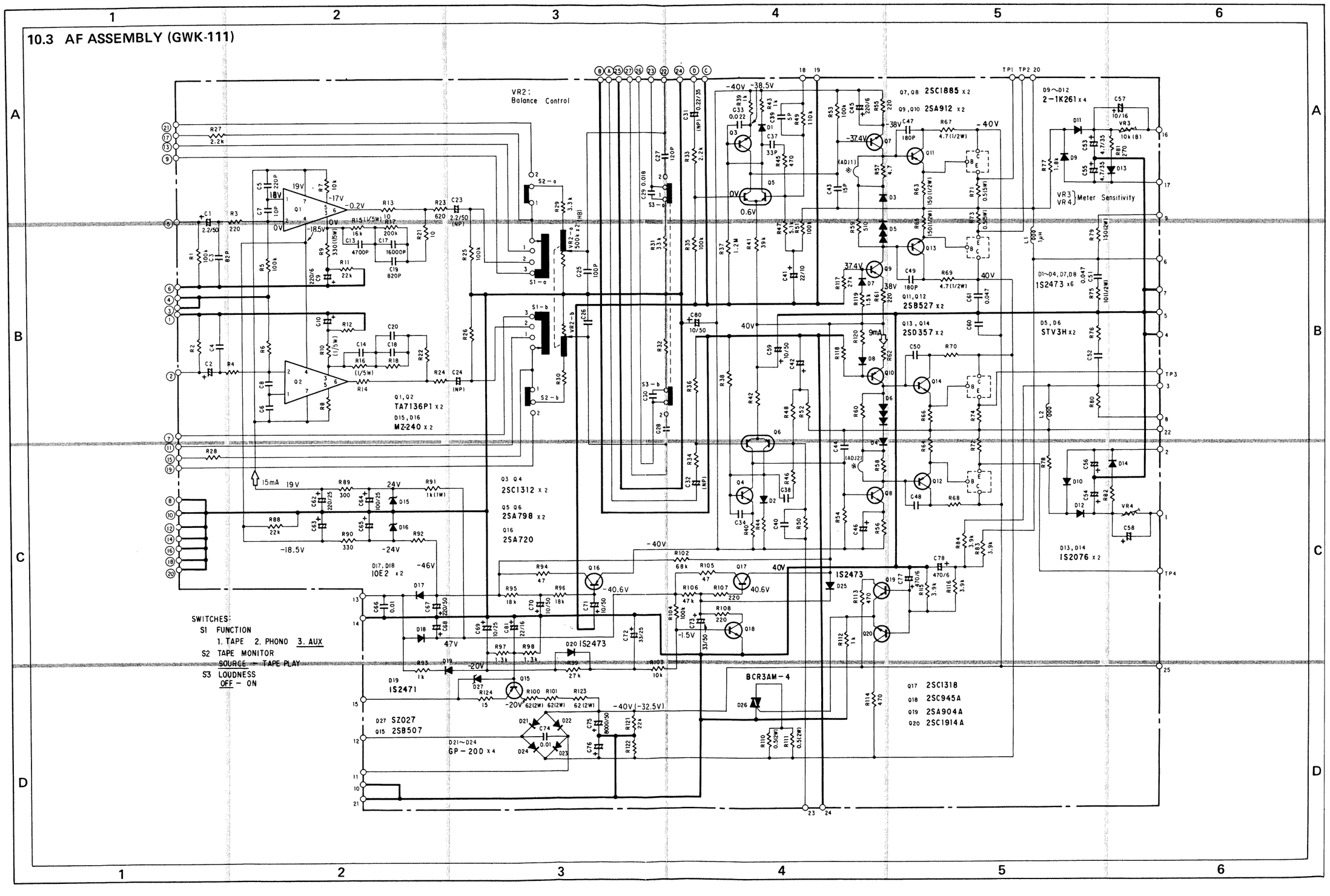

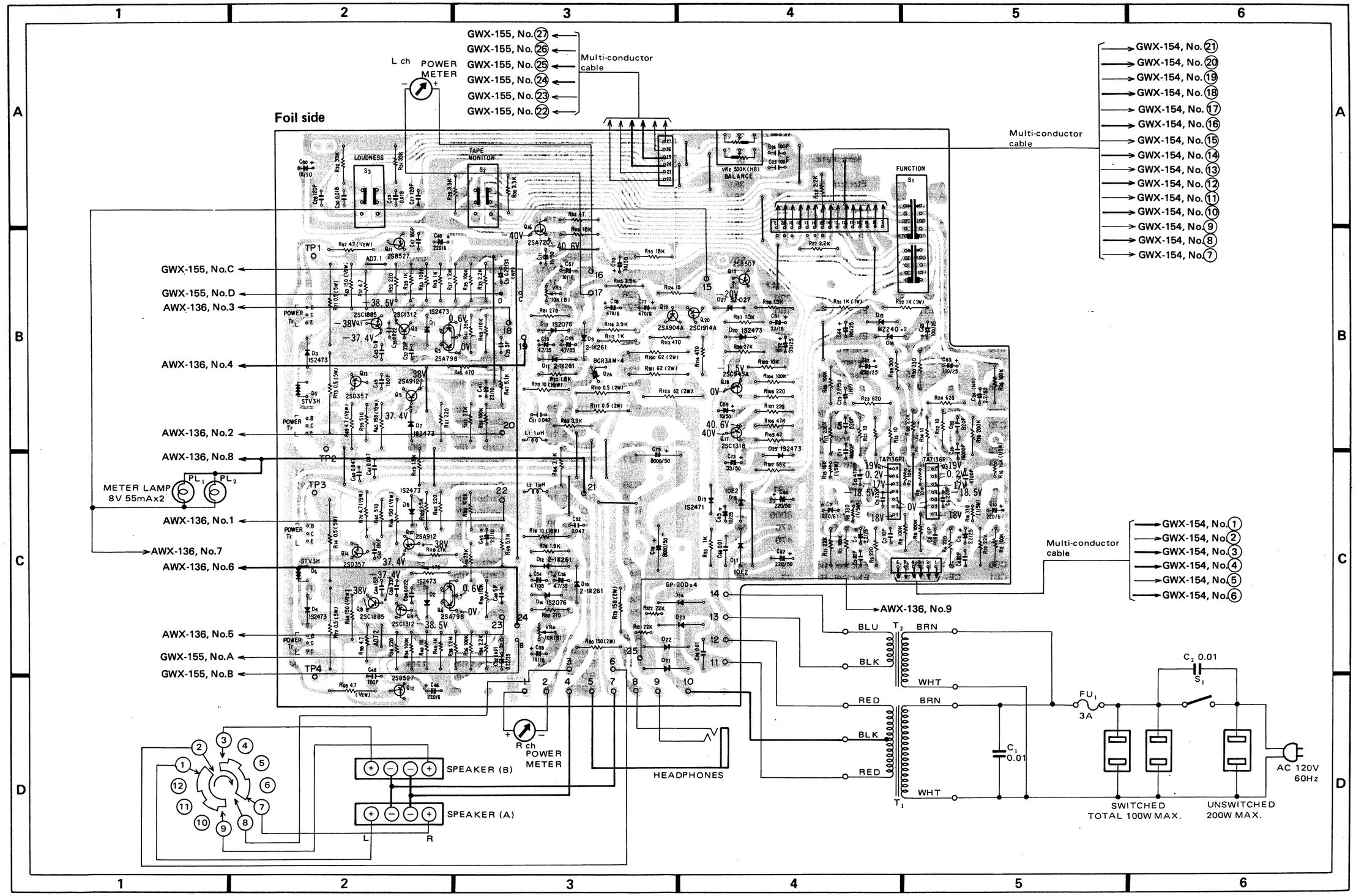
1
2
3
4
5
6
A
B
C
D
Foil side
GWX-155, No. 27
GWX-155, No. 26
GWX-155, No. 25
GWX-155, No. 24
GWX-155, No. 23
GWX-155, No. 22
Multi-conductor cable
L ch POWER METER
GWX-154, No. 21
GWX-154, No. 20
GWX-154, No. 19
GWX-154, No. 18
GWX-154, No. 17
GWX-154, No. 16
GWX-154, No. 15
GWX-154, No. 14
GWX-154, No. 13
GWX-154, No. 12
GWX-154, No. 11
GWX-154, No. 10
GWX-154, No. 9
GWX-154, No. 8
GWX-154, No. 7
GWX-155, No.C
GWX-155, No.D
AWX-136, No.3
AWX-136, No.4
AWX-136, No.2
AWX-136, No.8
METER LAMP 8V 55mAx2
AWX-136, No.1
AWX-136, No.7
AWX-136, No.6
AWX-136, No.5
GWX-155, No.A
GWX-155, No.B
LOUDNESS
TAPE MONITOR
FUNCTION
BALANCE
TP1
TP2
TP3
TP4
SPEAKER (B)
SPEAKER (A)
R ch POWER METER
HEADPHONES
AWX-136, No.9
Multi-conductor cable
GWX-154, No. 1
GWX-154, No. 2
GWX-154, No. 3
GWX-154, No. 4
GWX-154, No. 5
GWX-154, No. 6
BLU
BLK
WHT
RED
BRN
FU1 3A
C2 0.01
S1
C1 0.01
AC 120V 60Hz
SWITCHED TOTAL 100W MAX.
UNSWITCHED 200W MAX.

Parts List of AF Assembly (GWK-111)

SWITCHES

Symbol	Part No.	Description
S1	ASD-071	Rotary switch (FUNCTION)
S2	ASK-122	Lever switch (TAPE MONITOR)
S3	ASK-122	Lever switch (LOUDNESS)

CAPACITORS

Symbol	Part No.	Description		
C1	CSZA 2R2M 25	Electrolytic	2.2	25V
C2	CSZA 2R2M 25	Electrolytic	2.2	25V
C3	CCDSL 820K 50	Ceramic	82p	50V
C4	CCDSL 820K 50	Ceramic	82p	50V
C5	CCDSL 221K 50	Ceramic	220p	50V
C6	CCDSL 221K 50	Ceramic	220p	50V
C7	CCDSL 100K 50	Ceramic	10p	50V
C8	CCDSL 100K 50	Ceramic	10p	50V
C9	CEA 221P 6	Electrolytic	220	6V
C10	CEA 221P 6	Electrolytic	220	6V
C13	CQSA 472G 50	Polystyrene	4700p	50V
C14	CQSA 472G 50	Polystyrene	4700p	50V
C17	CQPA 163G 50	Polypropylene	0.016	50V
C18	CKDYB 821K 50	Ceramic	820p	50V
C19	CKDYB 821K 50	Ceramic	820p	50V
C20	ACH-323	Electrolytic	2.2	50V
C23	ACH-323	Electrolytic	2.2	50V
C24	CCDSL 101K 50	Ceramic	100p	50V
C25	CCDSL 101K 50	Ceramic	100p	50V
C26	CCDSL 121K 50	Ceramic	120p	50V
C27	CCDSL 121K 50	Ceramic	120p	50V
C28	CQMA 183J 50	Mylar	0.018	50V
C29	CQMA 183J 50	Mylar	0.018	50V
C30	ACH-304	Electrolytic	0.22	35V
C31	ACH-304	Electrolytic	0.22	35V
C32	CQMA 223J 50	Mylar	0.022	50V
C33	CQMA 223J 50	Mylar	0.022	50V
C34	CCDSL 330J 50	Ceramic	33p	50V
C37	CCDSL 330J 50	Ceramic	33p	50V
C38	CCDSL 050D 50	Ceramic	5p	50V
C39	CCDSL 050D 50	Ceramic	5p	50V
C40	CEA 220P 10	Electrolytic	22	10V
C41	CEA 220P 10	Electrolytic	22	10V
C42	CCDSL 150K 50	Ceramic	15p	50V
C43	CCDSL 150K 50	Ceramic	15p	50V
C44	CEA 221P 6	Electrolytic	220	6V
C45	CEA 221P 6	Electrolytic	220	6V
C46	CCDSL 181K 50	Ceramic	180p	50V
C47	CCDSL 181K 50	Ceramic	180p	50V
C48	CCDSL 181K 50	Ceramic	180p	50V
C49	CCDSL 181K 50	Ceramic	180p	50V
C50	CCDSL 181K 50	Ceramic	180p	50V
C51	CKDYF 473Z 50	Ceramic	0.047	50V
C52	CKDYF 473Z 50	Ceramic	0.047	50V
C53	CEA 4R7P 35	Electrolytic	4.7	35V
C54	CEA 4R7P 35	Electrolytic	4.7	35V
C55	CEA 4R7P 35	Electrolytic	4.7	35V
C56	CEA 4R7P 35	Electrolytic	4.7	35V
C57	CEA 100P 16	Electrolytic	10	16V
C58	CEA 100P 16	Electrolytic	10	16V
C59	CEA 100P 50	Electrolytic	10	50V
C60	CKDYF 473Z 50	Ceramic	0.047	50V
C61	CKDYF 473Z 50	Ceramic	0.047	50V
C62	CEA 221P 25	Electrolytic	220	25V
C63	CEA 101P 25	Electrolytic	100	25V
C64	CEA 101P 25	Electrolytic	100	25V
C65	CEA 101P 25	Electrolytic	100	25V
C66	ACG-004	Ceramic	0.01	150V
C67	CEA 221P 50	Electrolytic	220	50V
C68	CEA 221P 50	Electrolytic	220	50V
C69	CEA 100P 25	Electrolytic	10	25V
C70	CEA 100P 50	Electrolytic	10	50V
C71	CEA 100P 50	Electrolytic	10	50V
C72	CEA 330P 25	Electrolytic	33	25V
C73	CEA 330P 50	Electrolytic	33	50V
C74	ACG-004	Ceramic	0.01	150V
C75	ACH-082	Electrolytic	8000	50V
C76	ACH-082	Electrolytic	8000	50V
C77	CEA 471P 6	Electrolytic	470	6V
C78	CEA 471P 6	Electrolytic	470	6V
C80	CEA 100P 50	Electrolytic	10	50V
C81	CEA 220P 16	Electrolytic	22	16V

RESISTORS

Symbol	Part No.	Description	
VR2	ACT-118	Variable resistor (BALANCE)	500k-HB
VR3	C92-049	Semi-fixed	10k-B
VR4	C92-049	Semi-fixed	10k-B
R1	RD¼PS 104J NL	Carbon film	100k
R2	RD¼PS 104J NL	Carbon film	100k
R3	RD¼PS 221J	Carbon film	220
R4	RD¼PS 221J	Carbon film	220
R5	RD¼PS 104J NL	Carbon film	100k
R6	RD¼PS 104J NL	Carbon film	100k
R7	RD¼VS 103J	Carbon film	10k
R8	RD¼VS 103J	Carbon film	10k
R9	RN1/5SQ 3300F	Metal film	330 1/5W
R10	RN1/5SQ 3300F	Metal film	330 1/5W
R11	RD¼PS 223J	Carbon film	22k
R12	RD¼PS 223J	Carbon film	22k
R13	RD¼PS 100J	Carbon film	10
R14	RD¼PS 100J	Carbon film	10
R15	RN1/5SQ 1602F	Metal film	16k 1/5W
R16	RN1/5SQ 1602F	Metal film	16k 1/5W
R17	RN¼PT 2003F	Metal film	200k
R18	RN¼PT 2003F	Metal film	200k
R21	RD¼PS 100J	Carbon film	10
R22	RD¼PS 100J	Carbon film	10
R23	RD¼PS 621J	Carbon film	620
R24	RD¼PS 621J	Carbon film	620
R25	RD¼PS 104J	Carbon film	100k
R26	RD¼PS 104J	Carbon film	100k
R27	RD¼PS 222J	Carbon film	2.2k
R28	RD¼PS 222J	Carbon film	2.2k
R29	RD¼PS 332J	Carbon film	3.3k
R30	RD¼PS 332J	Carbon film	3.3k
R31	RD¼PS 333J	Carbon film	33k
R32	RD¼PS 333J	Carbon film	33k
R33	RD¼PS 222J	Carbon film	2.2k
R34	RD¼PS 222J	Carbon film	2.2k
R35	RD¼PS 104J	Carbon film	100k
R36	RD¼PS 104J	Carbon film	100k
R37	RD¼PS 125J	Carbon film	1.2M
R38	RD¼PS 125J	Carbon film	1.2M
R39	RD¼PS 102J	Carbon film	1k
R40	RD¼PS 102J	Carbon film	1k
R41	RD¼PS 393J	Carbon film	39k
R42	RD¼PS 393J	Carbon film	39k
R43	RD¼PS 102J	Carbon film	1k
R44	RD¼PS 102J	Carbon film	1k
R45	RD¼PS 471J	Carbon film	470
R46	RD¼PS 471J	Carbon film	470
R47	RD¼PS 512J	Carbon film	5.1k
R48	RD¼PS 512J	Carbon film	5.1k
R49	RD¼PS 114J	Carbon film	110k
R50	RD¼PS 114J	Carbon film	110k
R51	RD¼PS 104J	Carbon film	100k
R52	RD¼PS 104J	Carbon film	100k
R53	RD¼PS 104J	Carbon film	100k
R54	RD¼PS 104J	Carbon film	100k
R55	RD¼PS 221J	Carbon film	220
R56	RD¼PS 221J	Carbon film	220
R57	RD¼PS 4R7J	Carbon film	4.7
R58	RD¼PS 4R7J	Carbon film	4.7
R59	RD¼PS 511J	Carbon film	510
R60	RD¼PS 511J	Carbon film	510
R61	RD¼PS 221J	Carbon film	220
R62	RD¼PS 221J	Carbon film	220
R63	RD½PS 151J	Carbon film	150 ½W
R64	RD½PS 151J	Carbon film	150 ½W
R65	RD½PS 151J	Carbon film	150 ½W
R66	RD½PS 151J	Carbon film	150 ½W
R67	RD½PSF 4R7J	Carbon film	4.7 ½W
R68	RD½PSF 4R7J	Carbon film	4.7 ½W
R69	RD½PSF 4R7J	Carbon film	4.7 ½W
R70	RD½PSF 4R7J	Carbon film	4.7 ½W
R71	RT5B 0R5K	Wire wound	0.5 5W
R72	RT5B 0R5K	Wire wound	0.5 5W
R73	RT5B 0R5K	Wire wound	0.5 5W
R74	RT5B 0R5K	Wire wound	0.5 5W
R75	RD½PS 100J	Carbon film	10 ½W
R76	RD½PS 100J	Carbon film	10 ½W
R77	RD¼PS 182J	Carbon film	1.8k
R78	RD¼PS 182J	Carbon film	1.8k
R79	RS2P 151J	Metal oxide	150 2W
R80	RS2P 151J	Metal oxide	150 2W
R81	RD¼PS 271J	Carbon film	270
R82	RD¼PS 271J	Carbon film	270
R83	RD¼PS 392J	Carbon film	3.9k
R84	RD¼PS 392J	Carbon film	3.9k
R88	RD¼PS 223J	Carbon film	22k
R89	RD¼PS 301J	Carbon film	300
R90	RD¼PS 331J	Carbon film	330
R91	RS1P 102J	Metal oxide	1k 1W
R92	RS1P 102J	Metal oxide	1k 1W
R93	RD¼PS 102J	Carbon film	1k
R94	RD¼PS 470J	Carbon film	47
R95	RD¼PS 183J	Carbon film	18k
R96	RD¼PS 183J	Carbon film	18k
R97	RD¼PS 132J	Carbon film	1.3k
R98	RD¼PS 132J	Carbon film	1.3k
R99	RD¼PS 273J	Carbon film	27k
R100	RS2P 620J	Metal oxide	62 2W
R101	RS2P 620J	Metal oxide	62 2W
R102	RD¼PS 683J	Carbon film	68k
R103	RD¼PS 103J	Carbon film	10k
R104	RD¼PS 104J	Carbon film	100k
R105	RD¼PS 470J	Carbon film	47
R106	RD¼PS 473J	Carbon film	47k
R107	RD¼PS 221J	Carbon film	220
R108	RD¼PS 221J	Carbon film	220
R110	RN2H 0R5K	Metal film	0.5 2W
R111	RN2H 0R5K	Metal film	0.5 2W
R112	RD¼PS 102J	Carbon film	1k
R113	RD¼PS 471J	Carbon film	470
R114	RD¼PS 471J	Carbon film	470
R115	RD¼PS 392J	Carbon film	3.9k

Symbol	Part No.	Description		
R116	RD¼PS 392J	Carbon film	3.9k	
R117	RD¼PS 273J	Carbon film	27k	
R118	RD¼PS 273J	Carbon film	27k	
R119	RD¼PS 152J	Carbon film	1.5k	
R120	RD¼PS 152J	Carbon film	1.5k	
R121	RD¼VS 223J	Carbon film	22k	
R122	RD¼VS 223J	Carbon film	22k	
R123	RS2P 620J	Metal oxide	62	2W
R124	RD¼PS 150J	Carbon film	15	

SEMICONDUCTORS

Symbol	Part No.	Description
Q1	TA7136P1	IC
Q2	TA7136P1	IC
Q3	2SC1312-F or G	Transistor
Q4	2SC1312-F or G	Transistor
Q5	2SA798-F or G	Transistor
Q6	2SA798-F or G	Transistor
Q7	2SC1885-R or S	Transistor
Q8	2SC1885-R or S	Transistor
Q9	2SA912-R or S	Transistor
Q10	2SA912-R or S	Transistor
Q11	2SB527-D or C	Transistor
Q12	2SB527-D or C	Transistor
Q13	2SD357-D or C	Transistor
Q14	2SD357-D or C	Transistor
Q15	2SB507-D or E	Transistor
Q16	2SA720-R or Q	Transistor
Q17	2SC1318-R or S	Transistor
Q18	2SC945A-R or Q	Transistor
Q19	2SA904A-G or F	Transistor
Q20	2SC1914A-G or F	Transistor
D1	1S2473	Diode
D2	1S2473	Diode
D3	1S2473	Diode
D4	1S2473	Diode
D5	STV3H-Y	Varistor
D6	STV3H-Y	Varistor
D7	1S2473	Diode
D8	1S2473	Diode
D9	2-1K 261	Diode
D10	2-1K 261	Diode
D11	2-1K 261	Diode
D12	2-1K 261	Diode
D13	1S2076	Diode
D14	1S2076	Diode
D15	MZ-240 (WZ-240)	Zener diode
D16	MZ-240 (WZ-240)	Zener diode
D17	10E2 (1S1886)	Diode
D18	10E2 (1S1886)	Diode
D19	1S2471	Diode
D20	1S2473	Diode
D21	GP-20D	Diode
D22	GP-20D	Diode
D23	GP-20D	Diode
D24	GP-20D	Diode
D25	1S2473	Diode
D26	BCR3AM-4	Thyristor
D27	SZ-027	Zener diode

OTHERS

Symbol	Part No.	Description
L1	ATH-016	AF chock coil
L2	ATH-016	AF chock coil
	AKH-009	Transistor socket
	ANH-135	Heat sink

List of Changed Parts for Factory Modification

Symbol	Part No.	Description

10.4 INPUT TERMINAL ASSEMBLY (GWX-154)

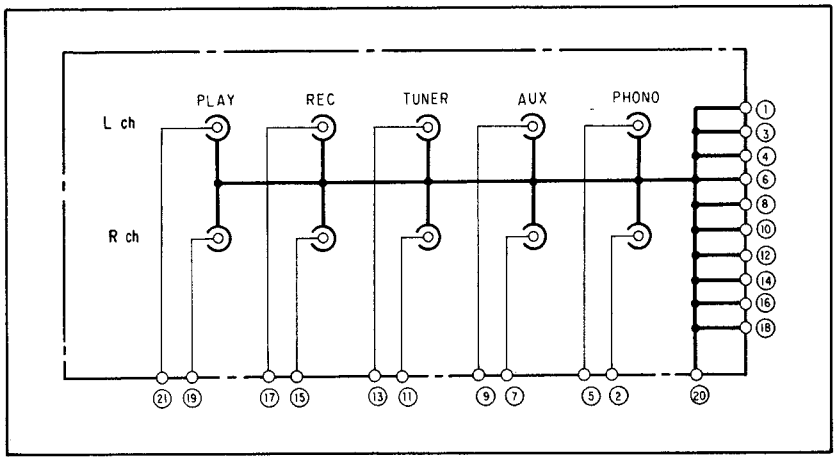

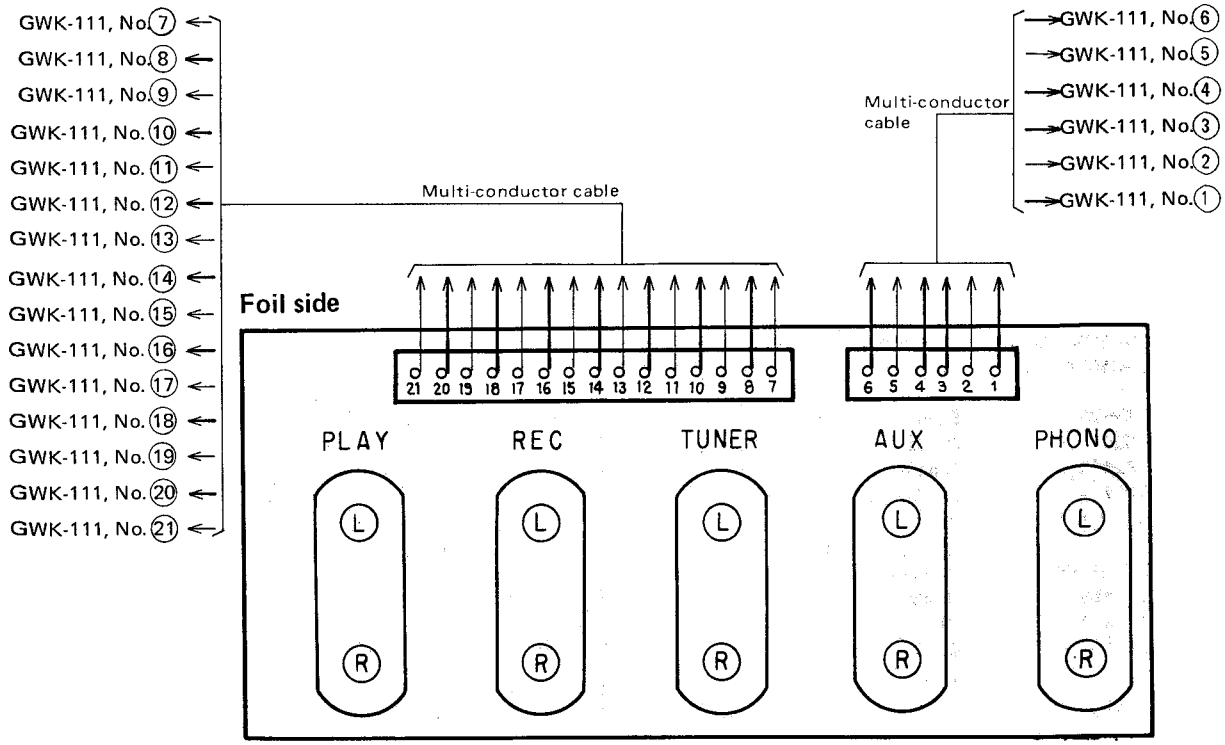

Parts List

Symbol	Part No.	Description
	AKB-045	Terminal (TAPE)
	AKB-028	Terminal (INPUT)

10.5 VOLUME ASSEMBLY (GWX-155)

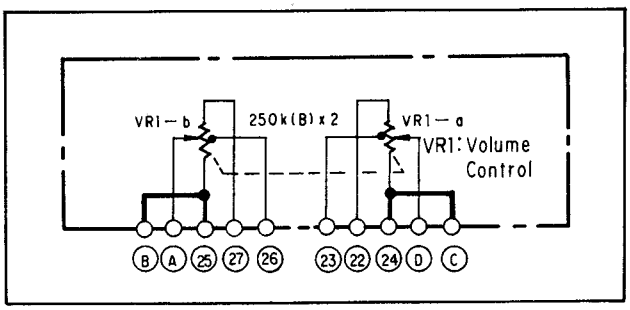

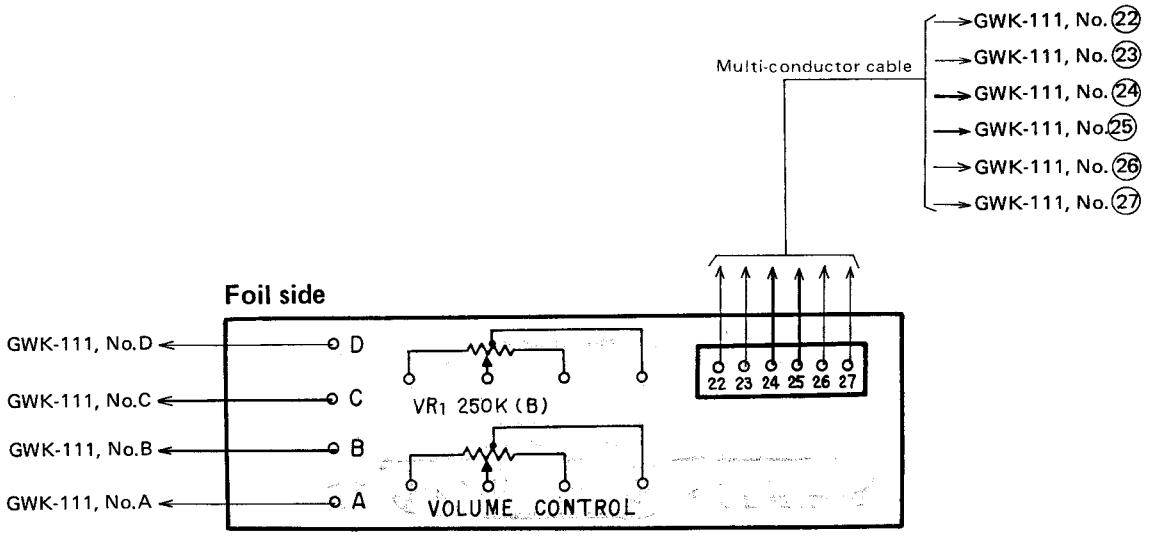

Parts List

Symbol	Part No.	Description
VR1	ACV-184	Variable resistor 250k-B (VOLUME)

10.6 TONE AND INDICATOR ASSEMBLY (AWX-136)

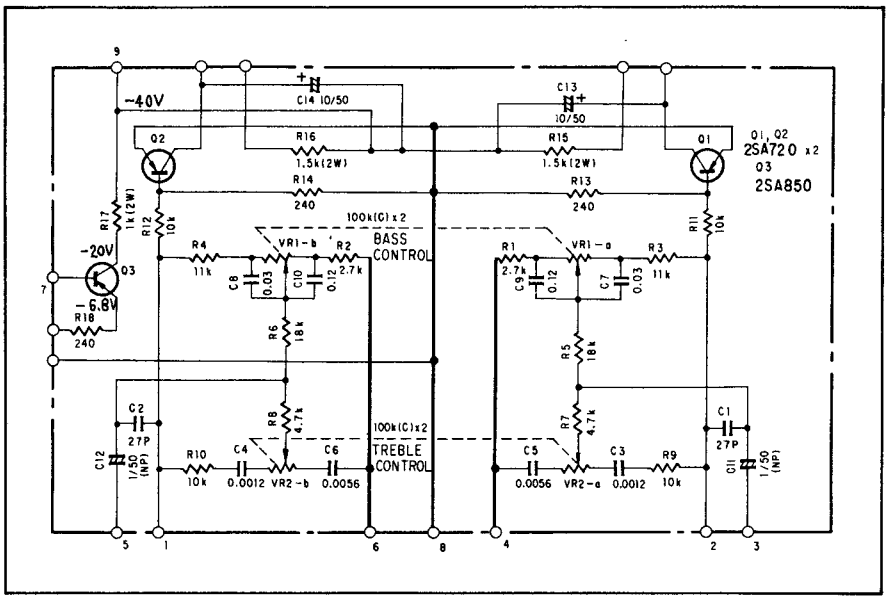

Foil side

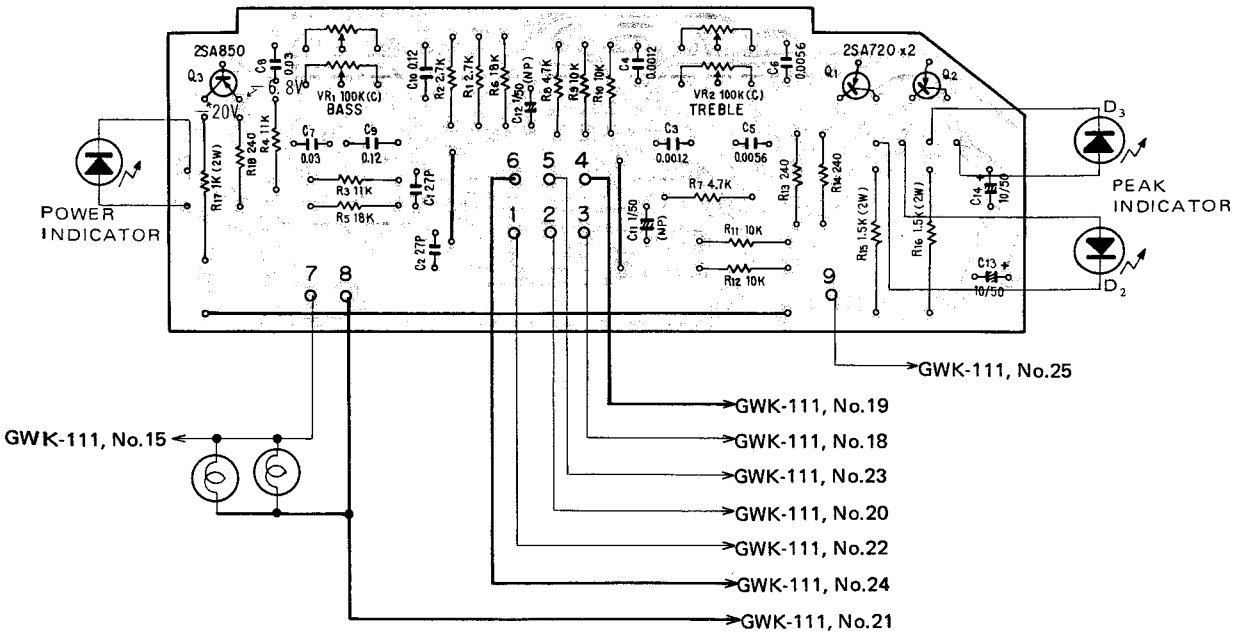

Parts List of Tone and Indicator Assembly (AWK-136)

CAPACITORS

Symbol	Part No.	Description		
C1	CCDSL 270K 50	Ceramic	27p	50V
C2	CCDSL 270K 50	Ceramic	27p	50V
C3	CQMA 122J 50	Mylar	0.0012	50V
C4	CQMA 122J 50	Mylar	0.0012	50V
C5	CQMA 562J 50	Mylar	0.0056	50V
C6	CQMA 562J 50	Mylar	0.0056	50V
C7	CQMA 303J 50	Mylar	0.03	50V
C8	CQMA 303J 50	Mylar	0.03	50V
C9	CQMA 124J 50	Mylar	0.12	50V
C10	CQMA 124J 50	Mylar	0.12	50V
C11	ACH-326	Electrolytic	1	50V
C12	ACH-326	Electrolytic	1	50V
C13	CEA 100P 50	Electrolytic	10	50V
C14	CEA 100P 50	Electrolytic	10	50V

RESISTORS

Symbol	Part No.	Description		
VR1	ACT-117	Variable resistor 100k (BASS)		
VR2	ACT-117	Variable resistor 100k (TREBLE)		
R1	RD¼PS 272J	Carbon film	2.7k	
R2	RD¼PS 272J	Carbon film	2.7k	
R3	RD¼PS 113J	Carbon film	11k	
R4	RD¼PS 113J	Carbon film	11k	
R5	RD¼PS 183J	Carbon film	18k	
R6	RD¼PS 183J	Carbon film	18k	
R7	RD¼PS 472J	Carbon film	4.7k	
R8	RD¼PS 472J	Carbon film	4.7k	
R9	RD¼PS 103J	Carbon film	10k	
R10	RD¼PS 103J	Carbon film	10k	
R11	RD¼PS 103J	Carbon film	10k	
R12	RD¼PS 103J	Carbon film	10k	
R13	RD¼PS 241J	Carbon film	240	
R14	RD¼PS 241J	Carbon film	240	
R15	RS2P 152J	Metal oxide	1.5k	2W
R16	RS2P 152J	Metal oxide	1.5k	2W
R17	RS2P 102J	Metal oxide	1k	2W
R18	RD¼PS 241J	Carbon film	240	

SEMICONDUCTORS

Symbol	Part No.	Description
Q1	2SA720-R or Q	Transistor
Q2	2SA720-R or Q	Transistor
Q3	2SA850-C or D	Transistor

List of Changed Parts for Factory Modification

Symbol	Part No.	Description

11. PACKING

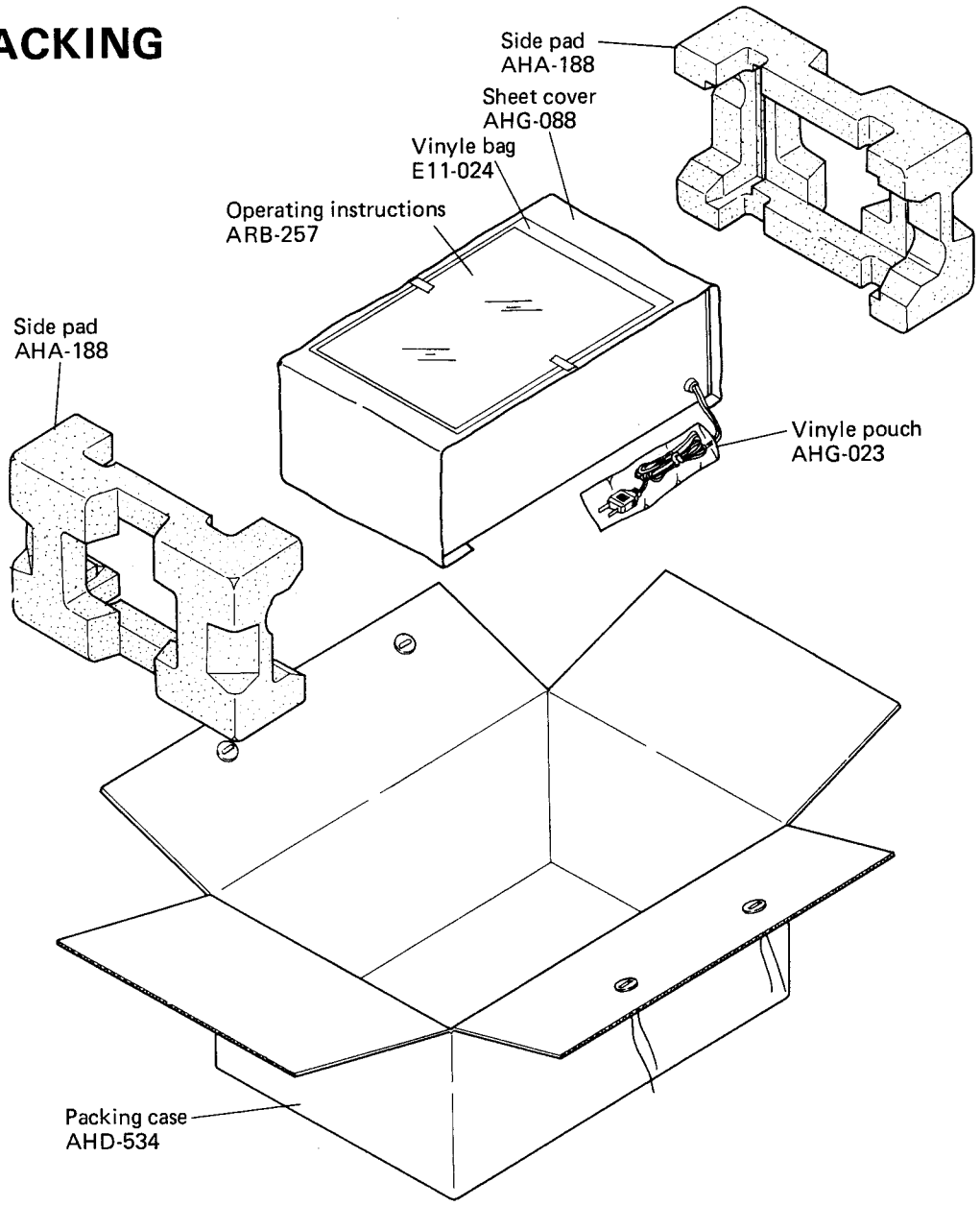

12. SUPPLEMENTS FOR KC TYPE

Model SA-6700/KC is the same as SA-6700/KU with exception of descriptions in this supplements.

Contrast of Miscellaneous Parts

Symbol	Description	Part No.		Remarks
		KU type	KC type	
T1	Power transformer	ATT-483	ATT-484	
FU2	Fuse 160mA	.....	AEK-408	
C1	Ceramic 0.01 125V	ACG-003	ACG-014	
C2	Ceramic 0.01 250V	ACG-001	.....	
	Ceramic 0.01 125V	.....	ACG-014	
	Cover	AEC-279	AEC-365	for C1
	Cover	AEC-294	AEC-365	for C2
	Fuse holder 1P	.....	K91-008	for FU2
	Packing case	AHD-534	AHD-535	

ADDITIONAL

Service Manual

PIONEER

STEREO AMPLIFIER

SA-606

S
S/G
HG

NOTE:

- **For detailed instructions on adjustments, circuit descriptions, exploded views, etc., please refer to this Service Manual (pp. 3—34).**

1. SPECIFICATIONS

The specifications for Model SA-606 is the same as Model SA-6700 except for following sections;

Amplifier Section

Input (Sensitivity/Impedance)
TAPE PLAY (DIN connector) .... 150mV/50 kilohms (HG type only)

Output (Level/Impedance)
TAPE REC (DIN connector) ..... 30mV/80 kilohms (HG type only)

Hum and Noise (DIN, continuous power/50mW)
PHONO 58dB/66dB
AUX 60dB/85dB

Miscellaneous

Power Requirements ..... AC 110/120/220/240V (switchable) 50/60Hz (S and S/G types)
AC 220/240V (switchable), 50/60Hz (HG type only)

Power Consumption ..... 420W (max.) (HG type only)
100W (S and S/G types)

Dimentions ..... 420(W)x147(H)x261(D)mm
16-9/16(W)x5-13/16(H)x12-7/8(D)in

Weight ..... Without Package; 7.5kg (16 lb 9 oz)
With Package; 8.5kg (18 lb 12 oz)

Furnished Parts (S and S/G types)
Fuse 2A 1
Fuse 3A 1

2. CONTRAST OF MISCELLANEOUS PARTS

CONTRAST OF MISCELLANEOUS PARTS

SWITCHES

Symbol	Description	Part No.			
		KU type	S type	S/G type	HG type
S1	Lever switch (POWER)	ASK-066	ASK-097	ASK-097	ASA-505
S3	Plug in selector	.....	.....	.....	AKX-037
	Plug in selector with fuse holder	.....	AKR-031	AKR-031	.....

CAPACITORS

Symbol	Description	Part No.			
		KU type	S type	S/G type	HG type
C1	Ceramic 0.01 125V	ACG-003	.....	.....	.....
	Ceramic 0.01 250V	.....	ACG-001	ACG-001	ACG-001
C2	Ceramic 0.01 250V	ACG-001	ACG-001	ACG-001	.....

P.C. BOARD ASSEMBLIES

Symbol	Description	Part No.			
		KU type	S type	S/G type	HG type
	AF assembly	GWK-111	GWK-110	GWK-110	GWK-110
	Input terminal assembly	GWX-154	GWX-152	GWX-152	GWX-152
	Volume assembly	GWX-155	GWX-153	GWX-153	GWX-153
	Tone and indicator assembly	AWX-136	AWX-135	AWX-135	AWX-135
	DIN connector assembly	.....	.....	.....	AWX-137

FUSES

Symbol	Description	Part No.			
		KU type	S type	S/G type	HG type
FU1	Fuse 3A	AEK-101	AEK-101	AEK-101	.....
	Fuse 2A	.....	AEK-103	AEK-103	.....
	Fuse 1.25A	.....	.....	.....	AEK-018
FU2	Fuse 160mA	.....	.....	.....	AEK-408

OTHERS

Symbol	Description	Part No.			
		KU type	S type	S/G type	HG type
T1	Power transformer	ATT-483	ATT-485	ATT-485	ATT-486
T2	Power transformer	ATT-487	ATT-488	ATT-488	ATT-489

Symbol	Description	Part No.			
		KU type	S type	S/G type	HG type
	Fuse holder 1P	AKR-032	.....	.....	K91-008
	AC socket (AC OUTLET)	AKP-005	AKP-020	AKP-020	.....
	Recessed plug (AC INLET)	.....	.....	.....	AKP-008
	AC power cord	ADG-005	ADG-016	ADG-016	.....
	Top board assembly	AMS-023	.....	.....	.....
	Side board L	AMS-024	.....	.....	.....
	Side board R	AMS-025	.....	.....	.....
	Top cover	.....	ANE-195	ANE-195	ANE-195
	Screw (for top cover)	.....	ABA-079	ABA-079	ABA-079
	Power meter	AAW-069	AAW-087	AAW-087	AAW-087
	Front panel assembly	ANB-589	ANB-590	ANB-590	ANB-590
	Cushion	AEB-125	.....	.....	.....
	Cover (for C1)	AEC-279	AEC-099	AEC-099	AEC-099
	Cover (for C2)	AEC-294	AEC-099	AEC-099	.....

PACKING AND FURNISHED PARTS

Symbol	Description	Part No.			
		KU type	S type	S/G type	HG type
	Packing case	AHD-534	AHD-536	AHD-537	AHD-538
	Side pad	AHA-188	AHA-189	AHA-189	AHA-189
	Sheet cover	AHG-088	AHG-072	AHG-072	AHG-072
	Vinyl pouch	AHG-023	AHG-023	AHG-023	.....
	Vinyl pouch (for fuse)	.....	E11-033	E11-033	.....
	Fuse 2A	.....	AEK-103	AEK-103	.....
	Fuse 3A	.....	AEK-101	AEK-101	.....
	Operating instructions (ENGLISH)	ARB-257	ARB-258	ARB-258	ARB-258
	Operating instructions (GERMAN/FRENCH)	.....	.....	.....	ARD-119

3. SUPPLEMENTS FOR S AND S/G TYPES

3.1 EXPLODED VIEW

NOTE:
Parts indicated in green type cannot be supplied.

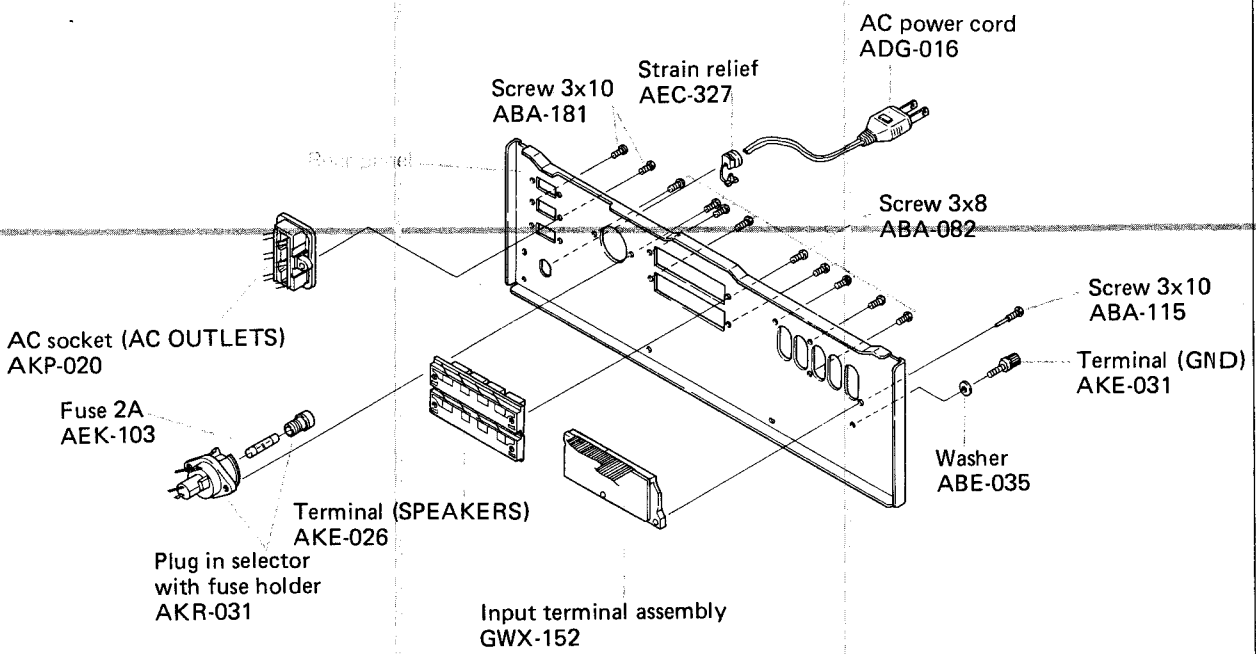

3.2 SCHEMATIC DIAGRAM

NOTE:
The indicated semiconductors are representative ones only. Other alternative semiconductors may be used and are listed in the parts list.

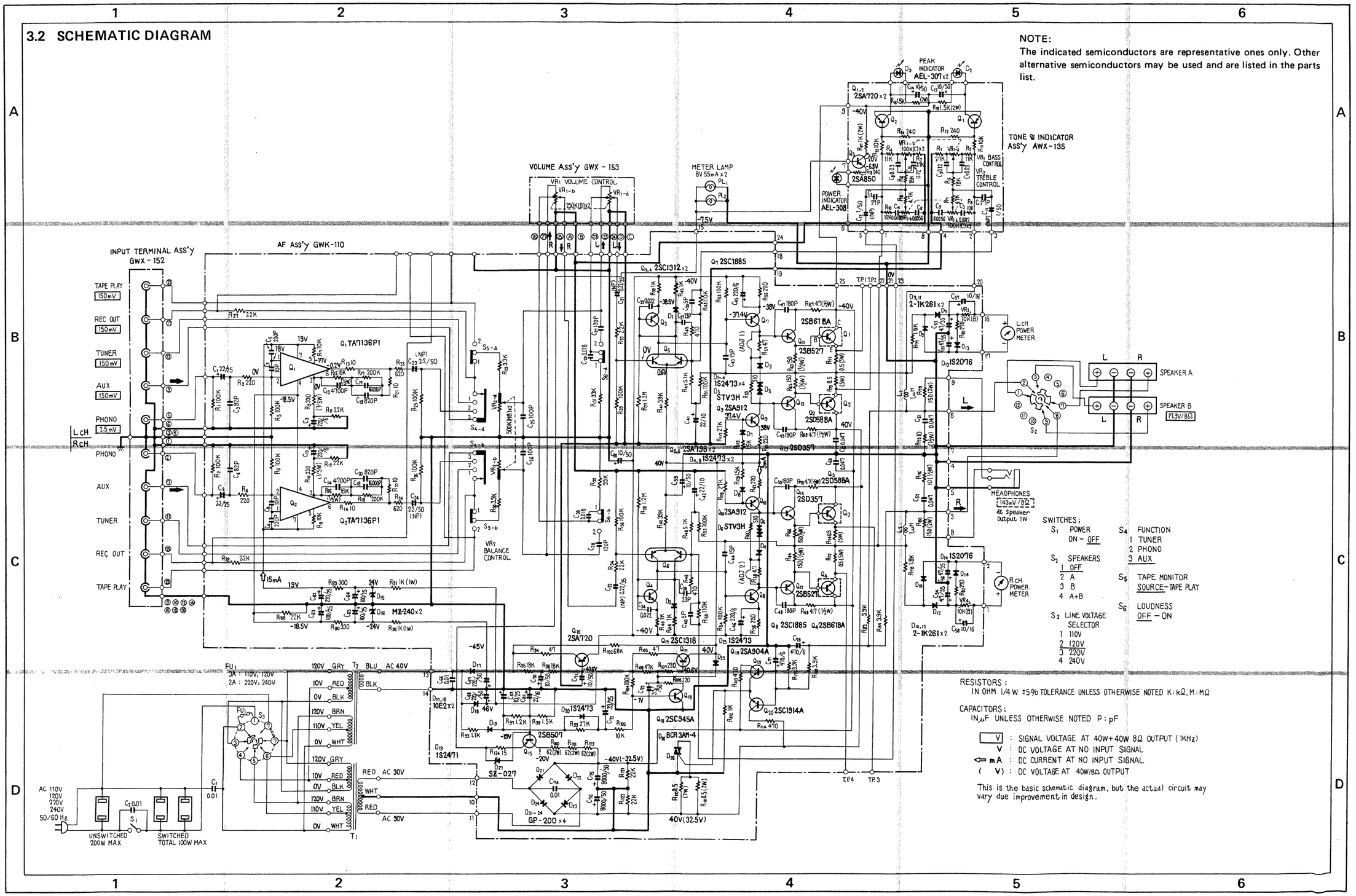

3.3 AF ASSEMBLY (GWK-110)

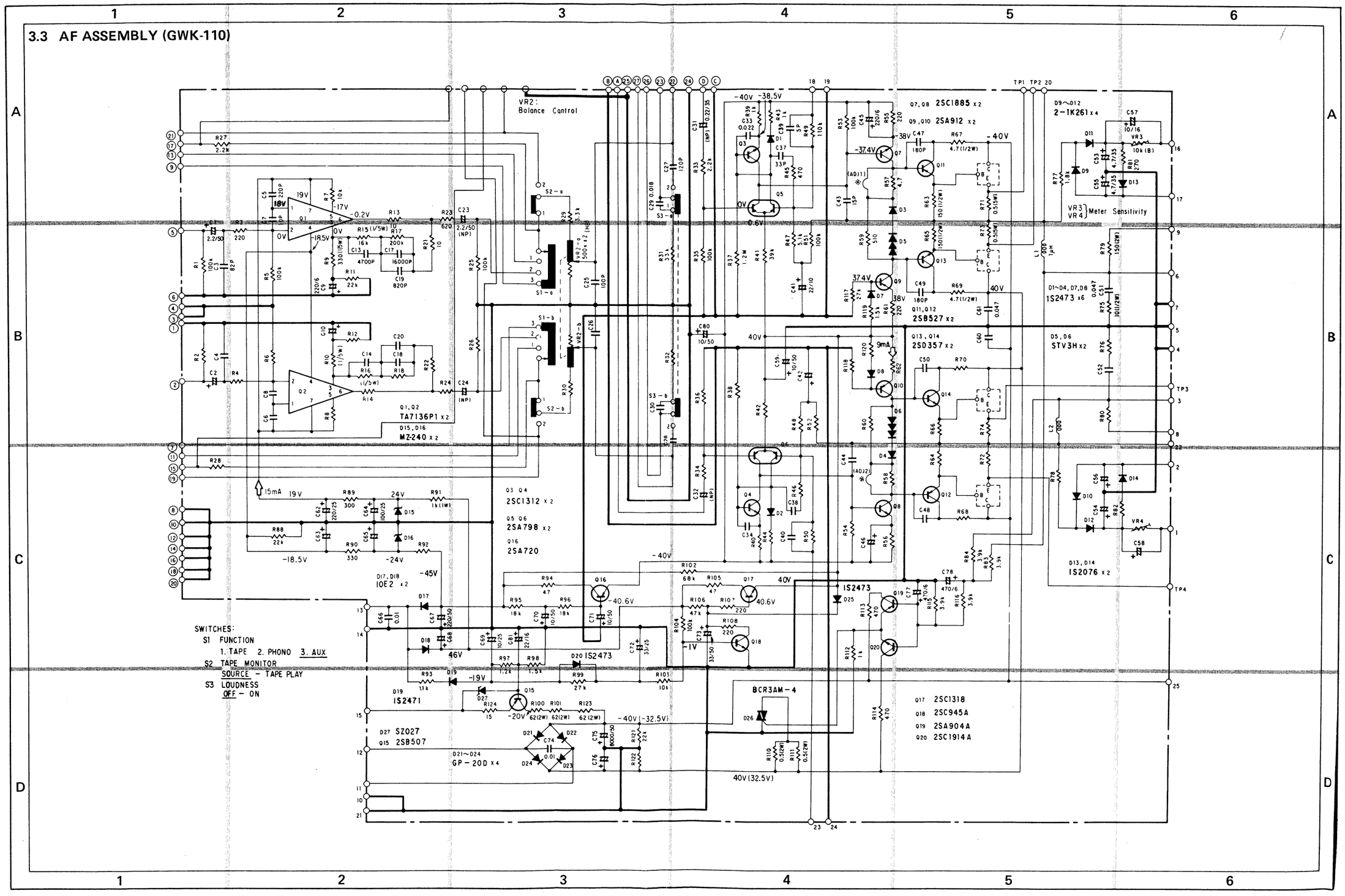

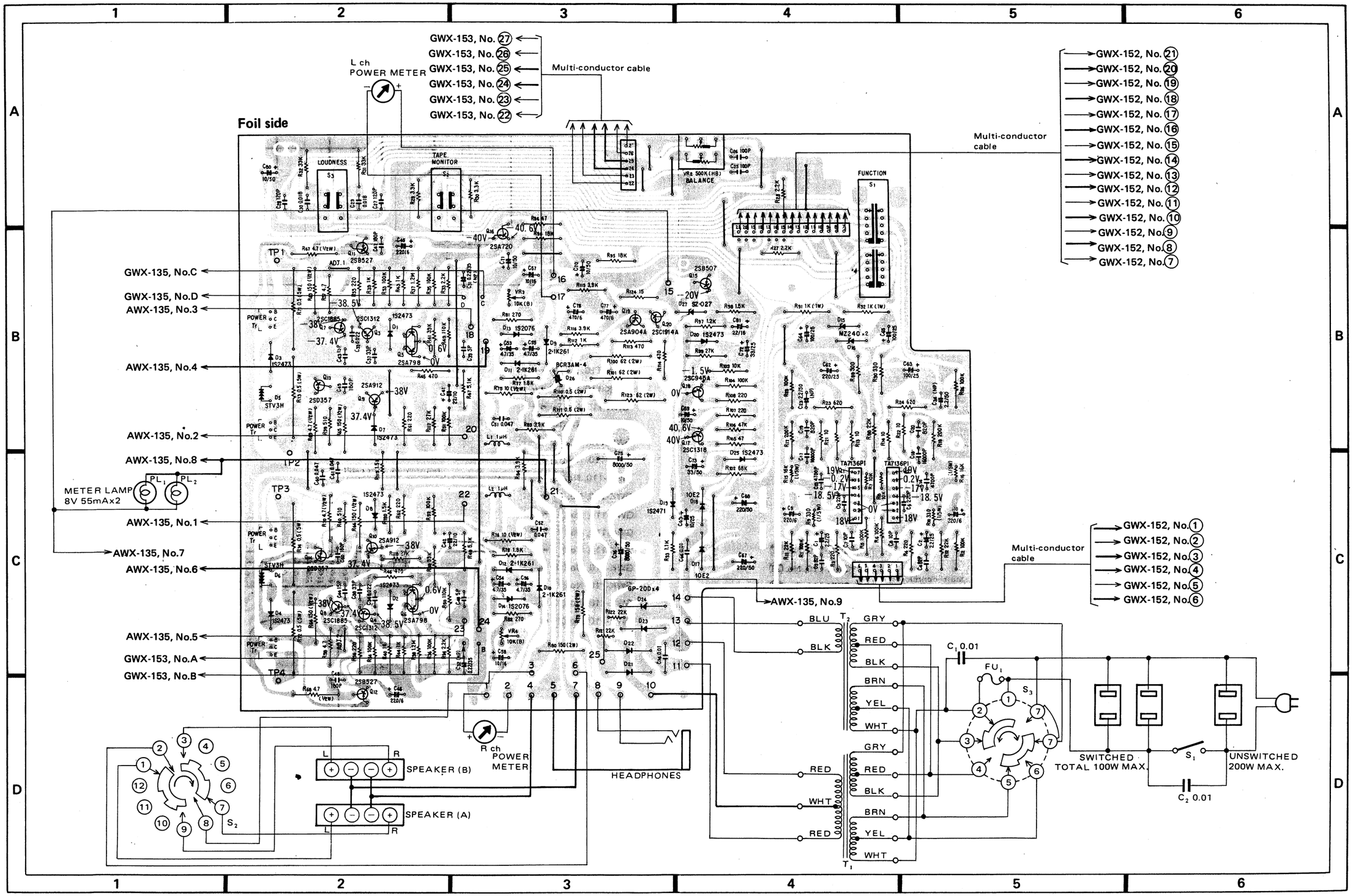
Foil side
L ch POWER METER
R ch POWER METER
Multi-conductor cable
GWX-153, No. 27
GWX-153, No. 26
GWX-153, No. 25
GWX-153, No. 24
GWX-153, No. 23
GWX-153, No. 22
GWX-152, No. 21
GWX-152, No. 20
GWX-152, No. 19
GWX-152, No. 18
GWX-152, No. 17
GWX-152, No. 16
GWX-152, No. 15
GWX-152, No. 14
GWX-152, No. 13
GWX-152, No. 12
GWX-152, No. 11
GWX-152, No. 10
GWX-152, No. 9
GWX-152, No. 8
GWX-152, No. 7
GWX-152, No. 1
GWX-152, No. 2
GWX-152, No. 3
GWX-152, No. 4
GWX-152, No. 5
GWX-152, No. 6
GWX-135, No.C
GWX-135, No.D
AWX-135, No.3
AWX-135, No.4
AWX-135, No.2
AWX-135, No.8
AWX-135, No.1
AWX-135, No.7
AWX-135, No.6
AWX-135, No.5
GWX-153, No.A
GWX-153, No.B
AWX-135, No.9
METER LAMP 8V 55mAx2
SPEAKER (B)
SPEAKER (A)
HEADPHONES
SWITCHED TOTAL 100W MAX.
UNSWITCHED 200W MAX.
LOUDNESS
TAPE MONITOR
FUNCTION
VR5 500K(HB) BALANCE
TP1
TP2
TP3
TP4
BLU
BLK
BRN
YEL
WHT
GRY
RED

Parts List of AF Assembly (GWK-110)

NOTE:
The parts of the GWK-110 is the same as the GWK-111 (KU type) except for following sections.

RESISTORS

Symbol	Part No.	Description	
R93	RD¼PS 112J	Carbon film	1.1k
R97	RD¼PS 122J	Carbon film	1.2k
R98	RD¼PS 152J	Carbon film	1.5k

3.4 VOLUME ASSEMBLY (GWX-153)

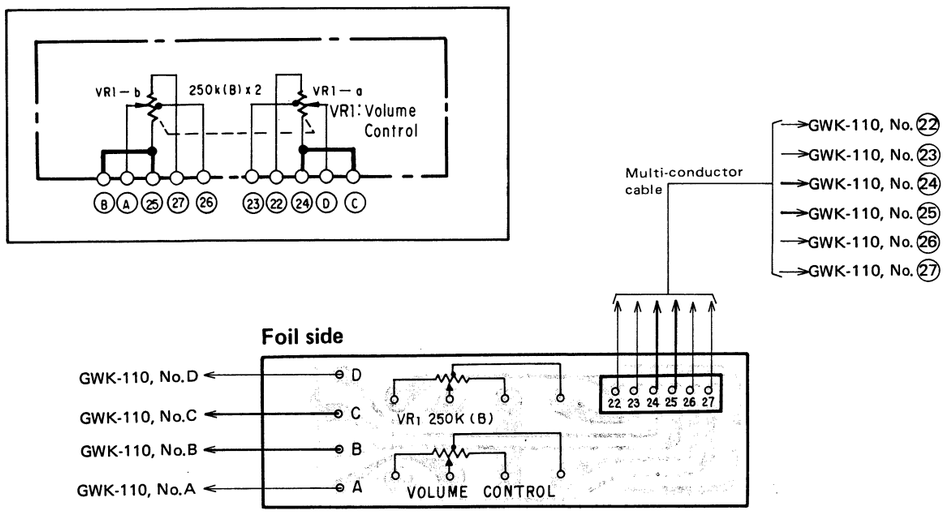

NOTE:
The parts of the GWX-153 is the same as the GWX-155 (KU type).

3.5 INPUT TERMINAL ASSEMBLY (GWX-152)

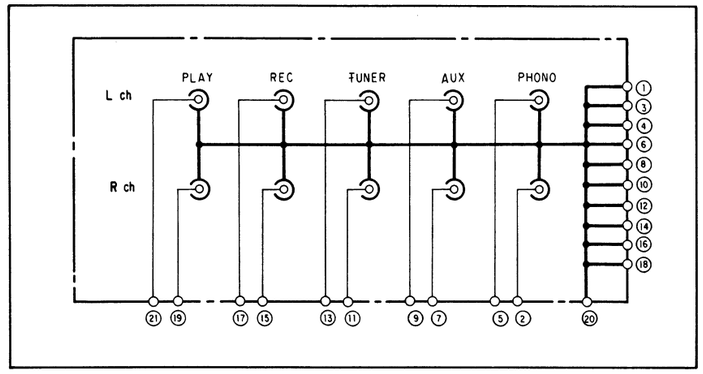

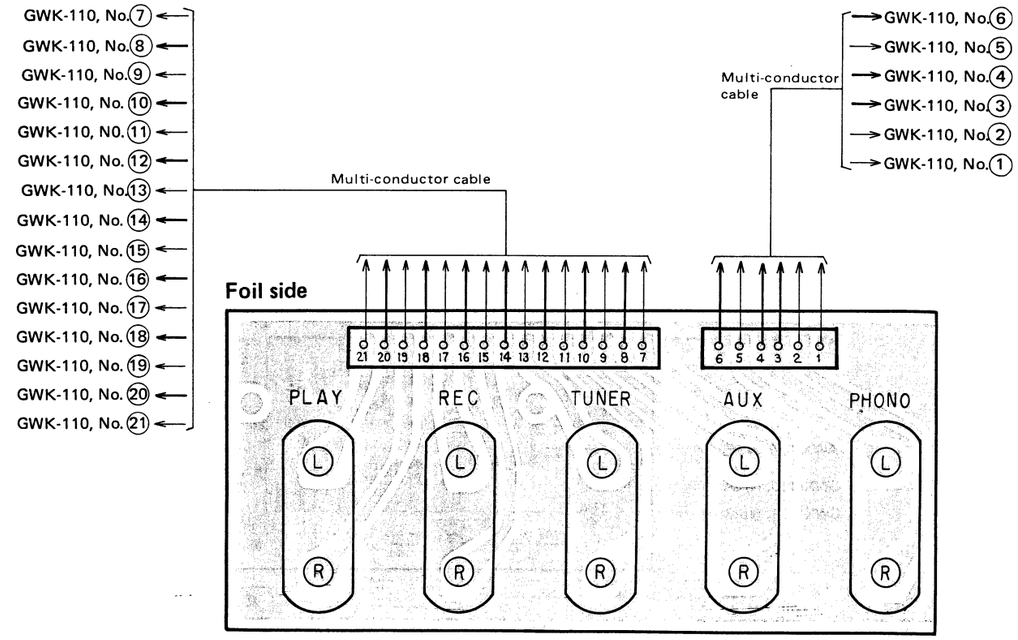

NOTE:
The parts of the GWX-152 is the same as the GWX-154 (KU type).

3.6 TONE AND INDICATOR ASSEMBLY (AWX-135)

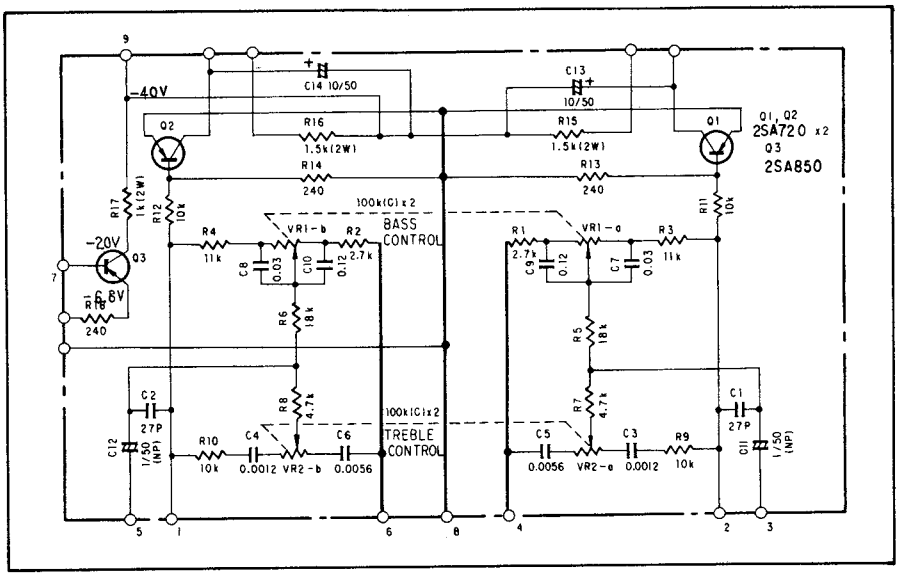

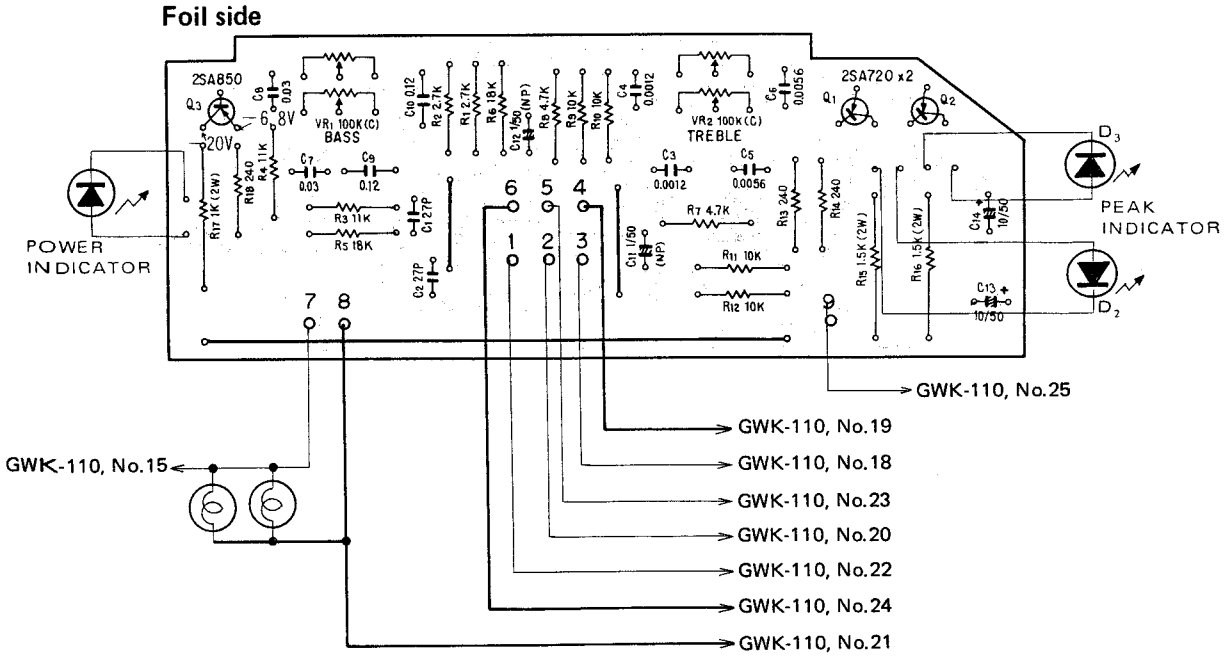

NOTE:
The parts of the AWX-135 is the same as the AWX-136 (KU type).

4. SUPPLEMENTS FOR HG TYPE

4.1 EXPLODED VIEW

NOTE:
Parts indicated in green type cannot be supplied.

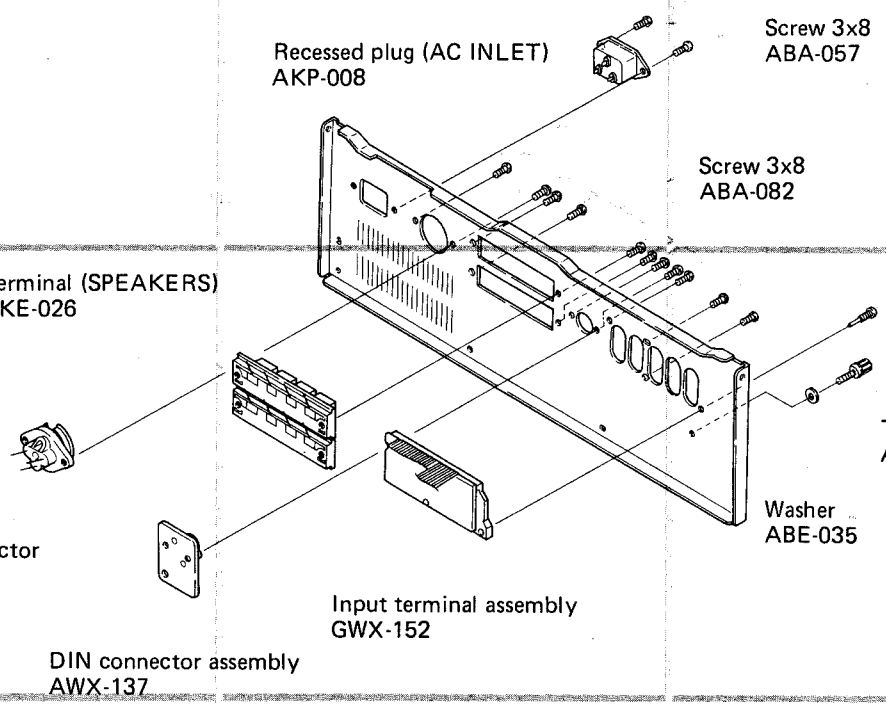

4.2 SCHEMATIC DIAGRAM

NOTE:
The indicated semiconductors are representative ones only. Other alternative semiconductors may be used and are listed in the parts list.

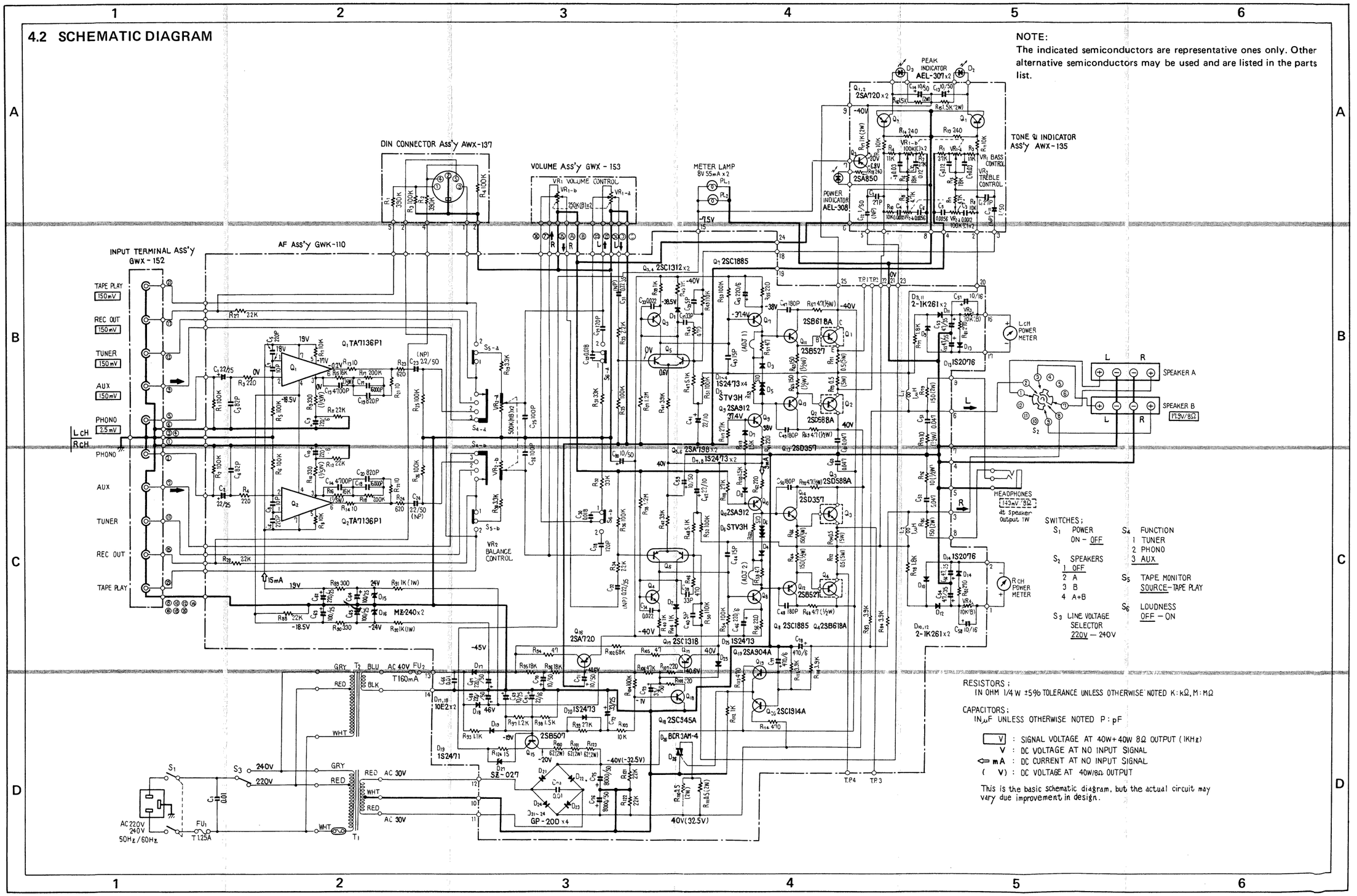

SWITCHES;

S_1	POWER ON – OFF	S_4	FUNCTION 1 TUNER 2 PHONO 3 AUX
S_2	SPEAKERS 1 OFF 2 A 3 B 4 A+B	S_5	TAPE MONITOR SOURCE–TAPE PLAY
S_3	LINE VOLTAGE SELECTOR 220V – 240V	S_6	LOUDNESS OFF – ON

RESISTORS;
IN OHM 1/4 W ±5% TOLERANCE UNLESS OTHERWISE NOTED K: kΩ, M: MΩ

CAPACITORS;
IN μF UNLESS OTHERWISE NOTED P: pF

V : SIGNAL VOLTAGE AT 40W+40W 8Ω OUTPUT (1KHz)
V : DC VOLTAGE AT NO INPUT SIGNAL
⇦ mA : DC CURRENT AT NO INPUT SIGNAL
(V) : DC VOLTAGE AT 40W/8Ω OUTPUT

This is the basic schematic diagram, but the actual circuit may vary due improvement in design.

4.3 DIN CONNECTOR ASSEMBLY (AWX-137)

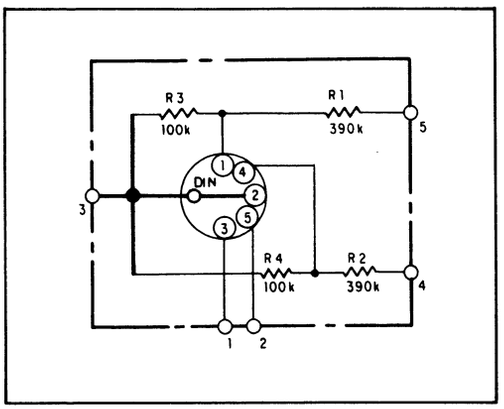

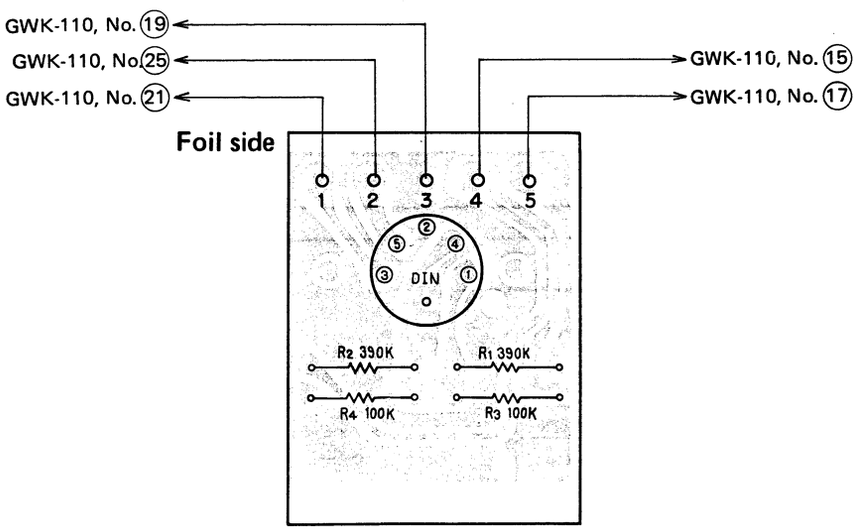

Parts List of DIN connector Assembly (AWX-137)

CONNECTOR

Symbol	Part No.	Description
	AKP-011	5P DIN socket

RESISTORS

Symbol	Part No.	Description	
R1	RD¼PS 394J	Carbon film	390k
R2	RD¼PS 394J	Carbon film	390k
R3	RD¼PS 104J	Carbon film	100k
R4	RD¼PS 104J	Carbon film	100k

STEREO AMPLIFIER

SA-606 HG

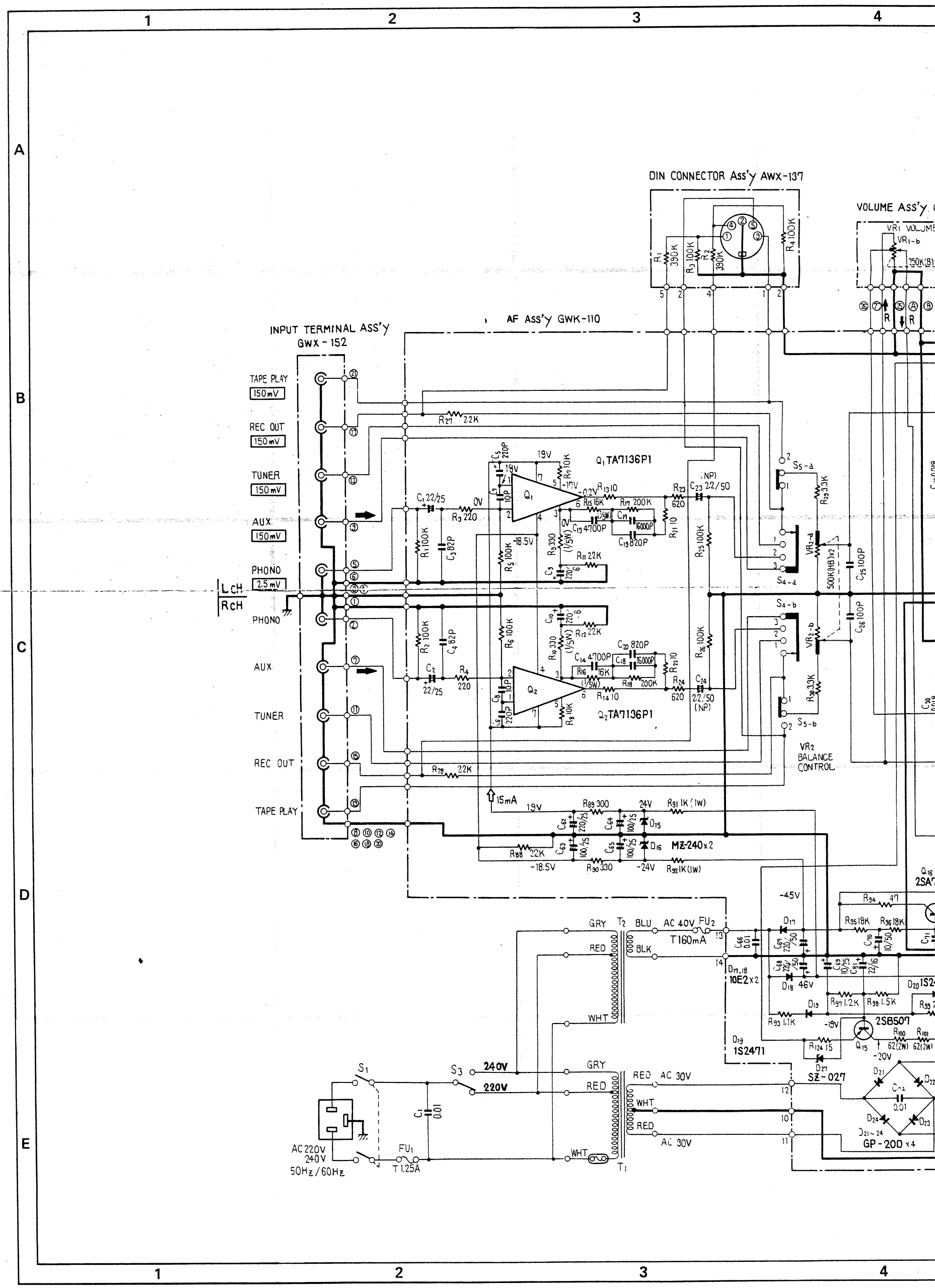

PIONEER®

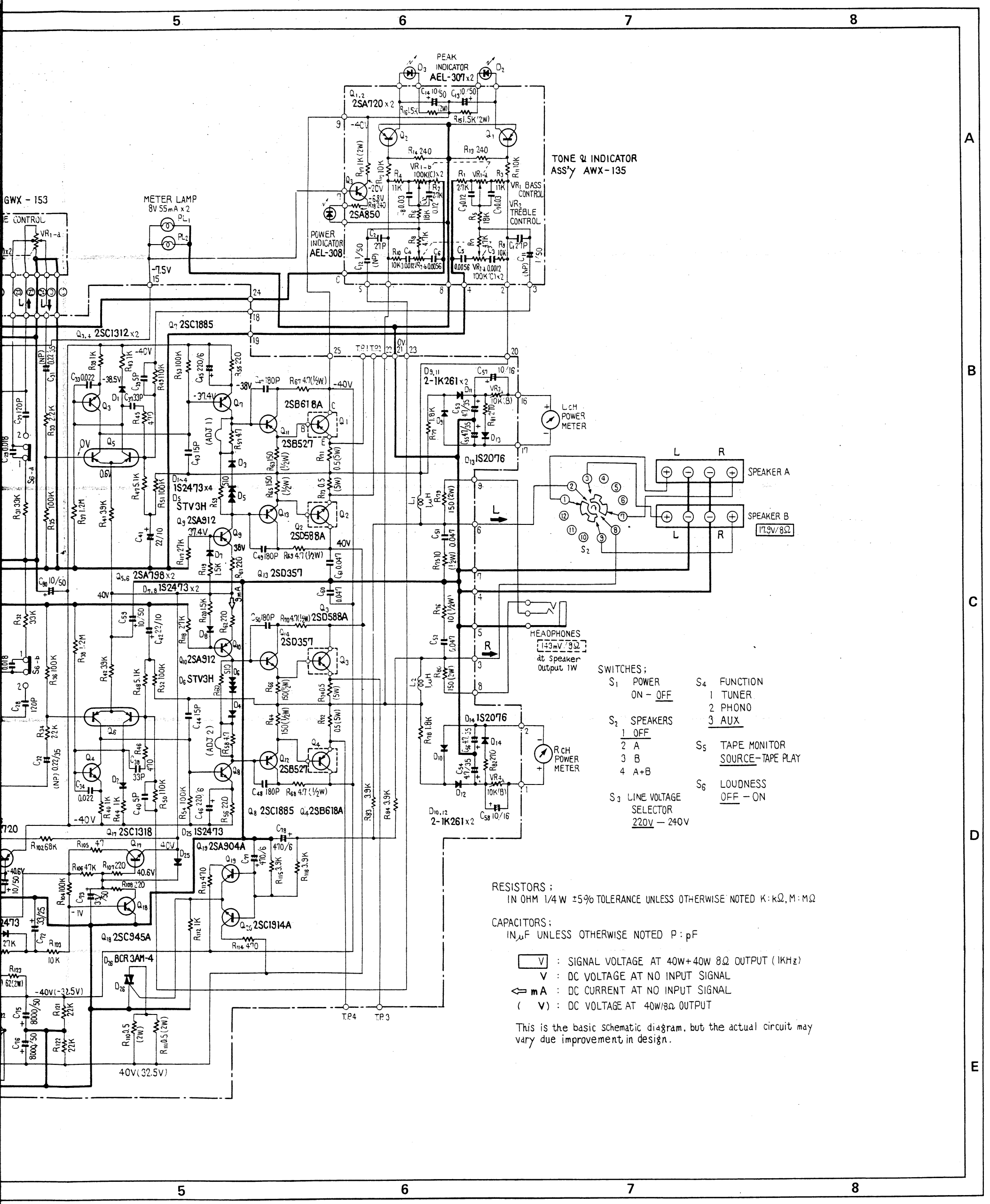

SWITCHES;

S_1	POWER ON – OFF	S_4	FUNCTION 1 TUNER 2 PHONO 3 AUX
S_2	SPEAKERS 1 OFF 2 A 3 B 4 A+B	S_5	TAPE MONITOR SOURCE – TAPE PLAY
S_3	LINE VOLTAGE SELECTOR 220V – 240V	S_6	LOUDNESS OFF – ON

RESISTORS;
IN OHM 1/4 W ±5% TOLERANCE UNLESS OTHERWISE NOTED K: kΩ, M: MΩ

CAPACITORS;
IN μF UNLESS OTHERWISE NOTED P: pF

[V] : SIGNAL VOLTAGE AT 40W+40W 8Ω OUTPUT (1KHz)
V : DC VOLTAGE AT NO INPUT SIGNAL
⇦ mA : DC CURRENT AT NO INPUT SIGNAL
(V) : DC VOLTAGE AT 40W/8Ω OUTPUT

This is the basic schematic diagram, but the actual circuit may vary due improvement in design.

STEREO AMPLIFIER

SA-606

S
S/G

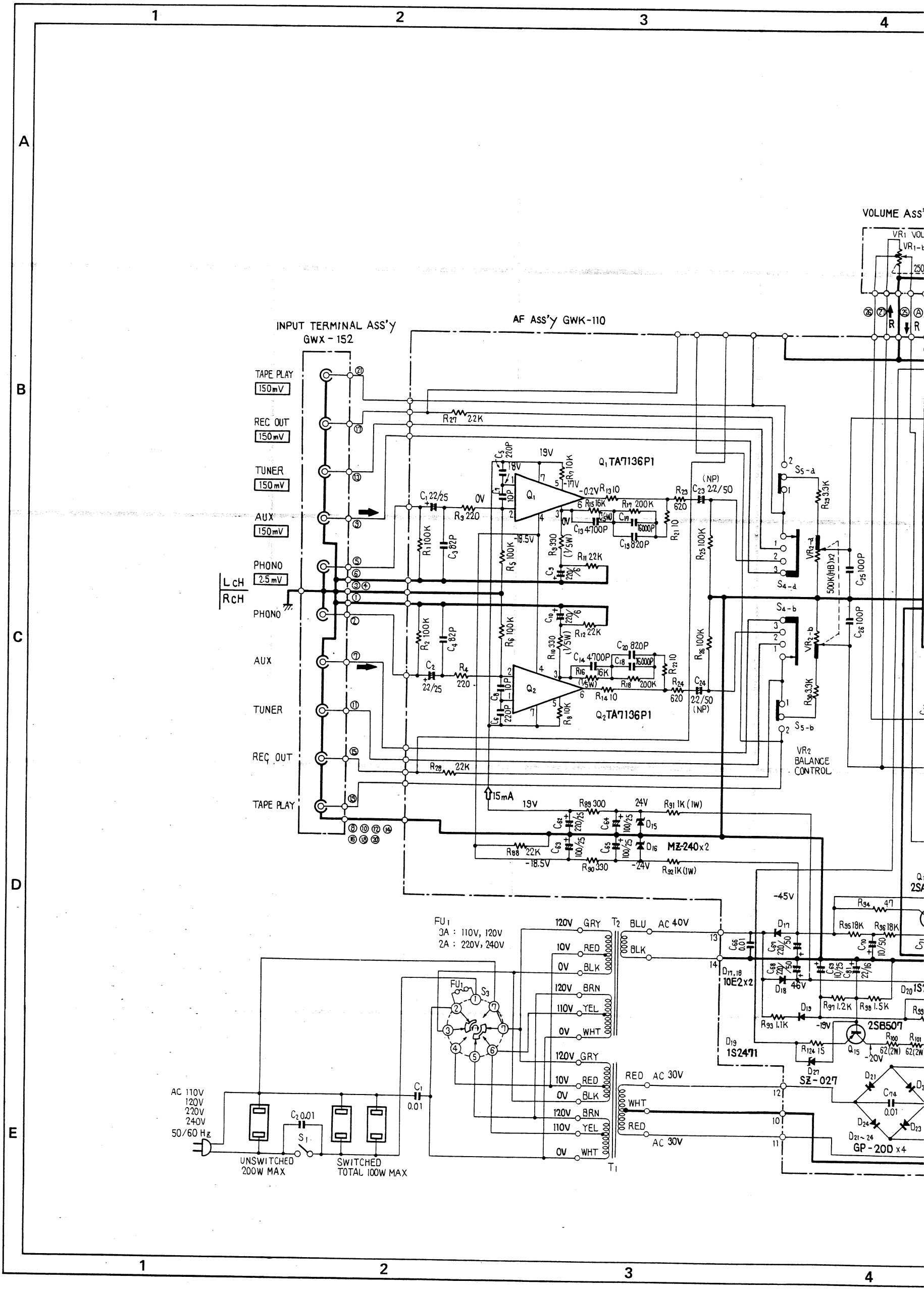

PIONEER

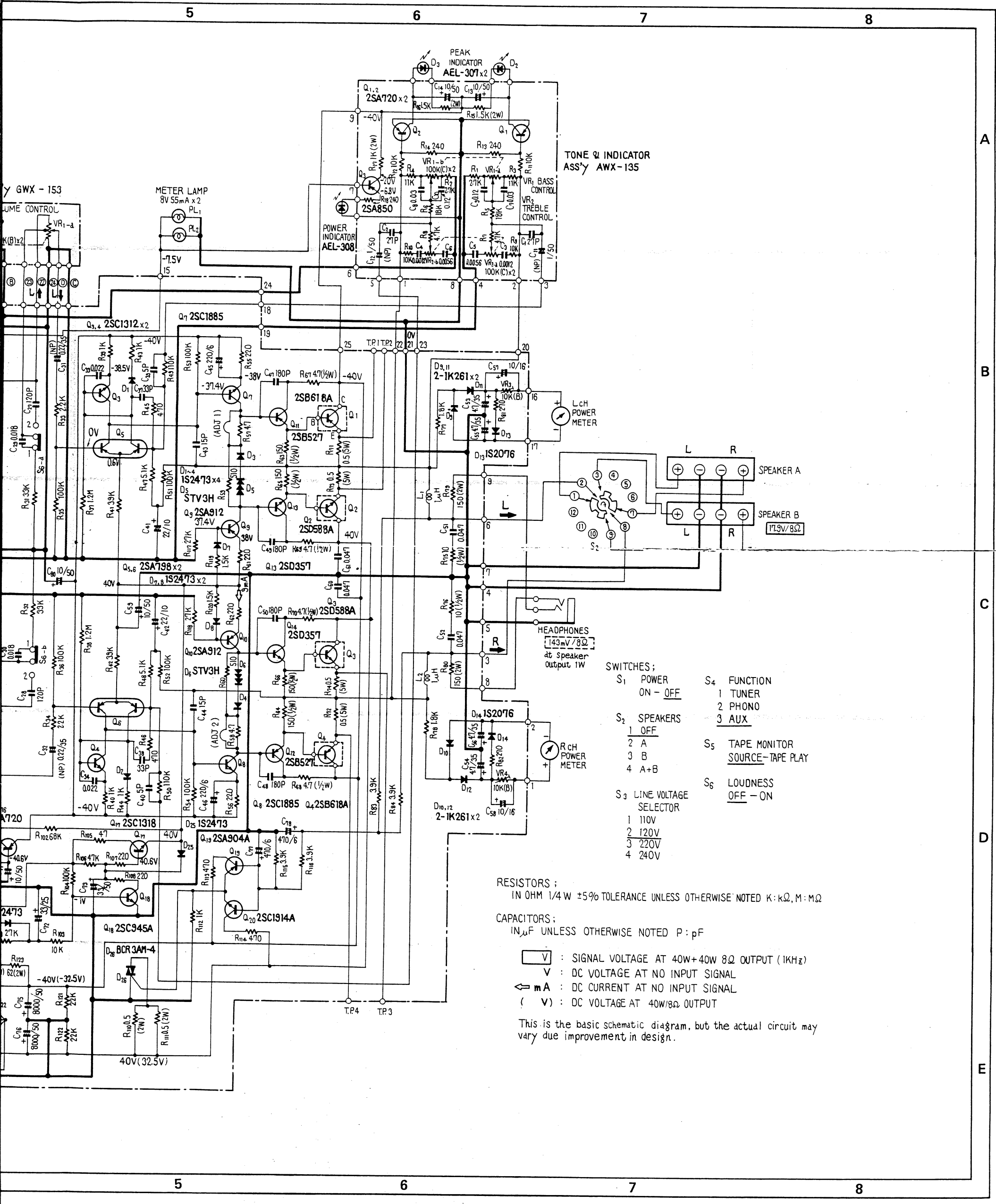

SWITCHES;

S_1 POWER
ON – OFF

S_2 SPEAKERS
1 OFF
2 A
3 B
4 A+B

S_3 LINE VOLTAGE SELECTOR
1 110V
2 120V
3 220V
4 240V

S_4 FUNCTION
1 TUNER
2 PHONO
3 AUX

S_5 TAPE MONITOR
SOURCE–TAPE PLAY

S_6 LOUDNESS
OFF – ON

RESISTORS;
IN OHM 1/4 W ±5% TOLERANCE UNLESS OTHERWISE NOTED K: kΩ, M: MΩ

CAPACITORS;
IN μF UNLESS OTHERWISE NOTED P: pF

[V] : SIGNAL VOLTAGE AT 40W+40W 8Ω OUTPUT (1KHz)
V : DC VOLTAGE AT NO INPUT SIGNAL
⇦ mA : DC CURRENT AT NO INPUT SIGNAL
(V) : DC VOLTAGE AT 40W/8Ω OUTPUT

This is the basic schematic diagram, but the actual circuit may vary due improvement in design.

STEREO AMPLIFIER

SA-6700

KU
KC

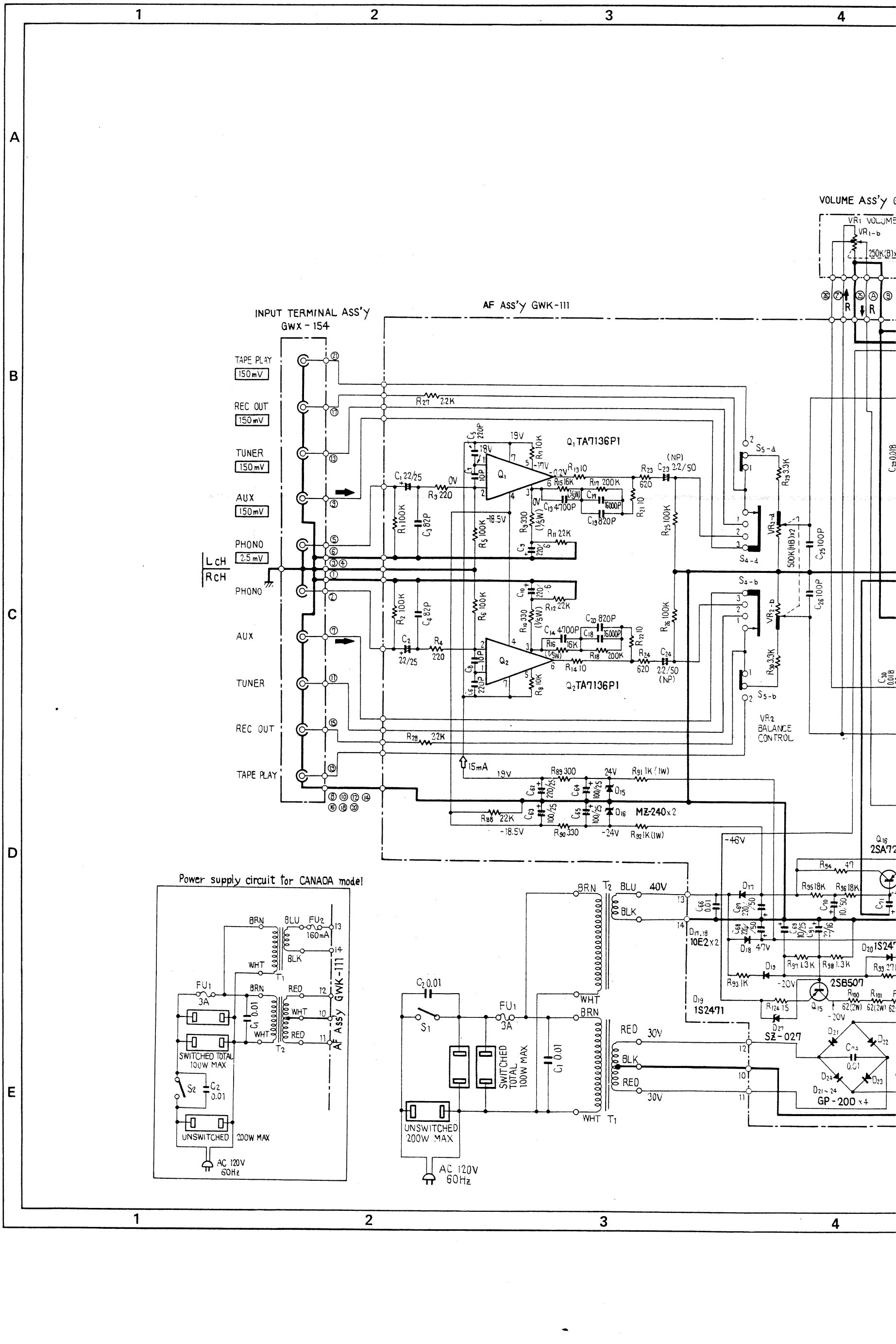

PIONEER®

TONE & INDICATOR ASS'Y AWX-136

PEAK INDICATOR AEL-307 x2

POWER INDICATOR AEL-308

METER LAMP 8V 55mA x 2

SPEAKER A

SPEAKER B 17.9V/8Ω

HEADPHONES 143mV/8Ω at Speaker Output 1W

L CH POWER METER

R CH POWER METER

SWITCHES;

S_1	POWER ON – OFF	S_4	FUNCTION 1 TUNER 2 PHONO 3 AUX
S_2	SPEAKERS 1 OFF 2 A 3 B 4 A+B	S_5	TAPE MONITOR SOURCE–TAPE PLAY
		S_6	LOUDNESS OFF – ON

RESISTORS;
IN OHM 1/4W ±5% TOLERANCE UNLESS OTHERWISE NOTED K: kΩ, M: MΩ

CAPACITORS;
IN μF UNLESS OTHERWISE NOTED P: pF

V	SIGNAL VOLTAGE AT 40W+40W 8Ω OUTPUT (1KHz)
V	DC VOLTAGE AT NO INPUT SIGNAL
⇦ mA	DC CURRENT AT NO INPUT SIGNAL
(V)	DC VOLTAGE AT 40W/8Ω OUTPUT

This is the basic schematic diagram, but the actual circuit may vary due improvement in design.