# Color Changer
# Beam 250 XT

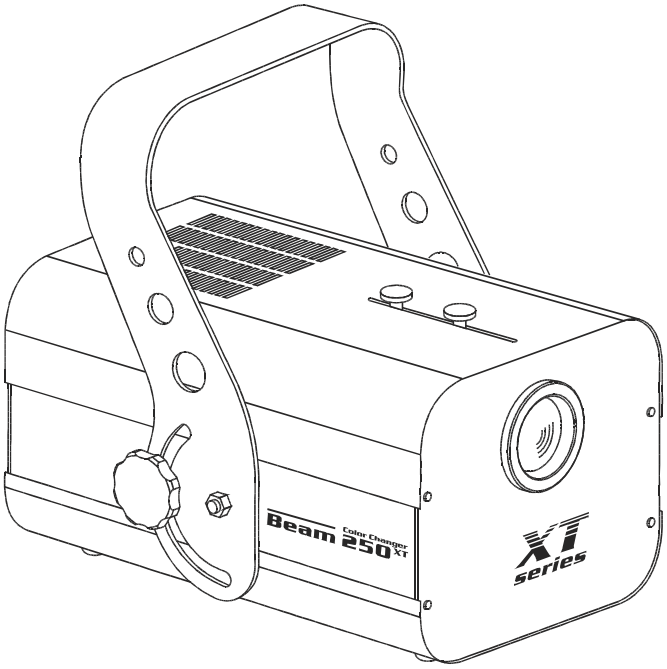


## USER MANUAL

XT series

ROBE

www.robe.cz

# BEAM 250 XT

## Table of contents


**1. Safety instructions ..... 4**
**2. Operating determinations ..... 5**
**3. Description of the device ..... 6**
**4. Installation ..... 7**
4.1Fitting/Exchanging the lamp ..... 7
4.2 Lamp adjustment ..... 7
4.3 Inserting/Exchanging the gobos ..... 8
4.4 Rigging the fixture ..... 8
4.5 Connection to the mains ..... 8
4.6 DMX-512 connection/connection between fixtures ..... 9
**5. DMX protocol ..... 10**
**6. Addressing ..... 11**
**7. Remotely controllable functions ..... 11**
7.1 Lamp ..... 11
7.2 Switching on and off the lamp via the control board ..... 11
7.3 Colour-wheel ..... 11
7.4 Effect-wheel ..... 12
7.5 Shutter ..... 12
7.6 Dimmer / Washlight ..... 12
7.7 Fan ..... 12
**8. Control Board ..... 12**
8.1 Main functions ..... 12
8.2 SPEC -Special functions ..... 13
**9. Error and information messages ..... 17**
**10. Technical specifications ..... 18**
**11. Maintenance and cleaning ..... 20**
**12. Appendix ..... 20**

***CAUTION!***
***Keep this device away from rain and moisture!***
***Unplug mains lead before opening the housing!***

**FOR YOUR OWN SAFETY, PLEASE READ THIS USER MANUAL CAREFULLY BEFORE YOU INITIAL START - UP!**

# 1. Safety instructions

Every person involved with installation and maintenance of this device have to:
- be qualilfied
- follow the instructions of this manual

***CAUTION!***
***Be careful with your operations. With a high voltage you can suffer a dangerous electric shock when touching the wires!***

This device has left our premises in absolutely perfect condition. In order to maintain this condition and to ensure a safe operation, it is absolutely necessary for the user to follow the safety instructions and warning notes written in this manual.

**Important:**
The manufacturer will not accept liability for any resulting damages caused by the non-observance of this manual or any unauthorized modification to the device.

Please consider that damages caused by manual modifications to the device are not subject to warranty.

Never let the power-cord come into contact with other cables! Handle the power-cord and all connections with the mains with particular caution!

Always plug in the power plug least. The power-plug has to be accessable after installing the device.

Make sure that the power-cord is never crimped or damaged by sharp edges. Check the device and the power-cord from time to time.

Always disconnect from the mains, when the device is not in use or before cleaning it. Only handle the power-cord by the plug. Never pull out the plug by tugging the power-cord.

This device falls under protection class I. Therefore it is essential to connect the yellow/green conductor to earth.

The electric connection, repairs and servicing must be carried out by a qualified employee.
Do not connect this device to a dimmer pack.

Do not switch the fixture on and off in short intervals as this would reduce the lamp's life.

During the initial start-up some smoke or smell may arise. This is a normal process and does not necessarily mean that the device is defective.

Do not touch the device's housing bare hands during its operation (housing becomes hot)!
For replacement use lamps and fuses of same type and rating only.

***CAUTION ! EYEDAMAGES !***
***Avoid looking directly into the light source (meant especially for epileptics) !***

## 2. Operating determinations

This device was designed for indoor use only.

If the device has been exposed to drastic temperature fluctuation (e.g. after transportation), do not switch it on immediately. The arising condensation water might damage your device. Leave the device switched off until it has reached room temperature.

When taking the device into operation, please make sure that the housing is closed firmly with all the necessary screws tightened up.

Never run the device without lamp!

Do not shake the device. Avoid brute force when installing or operating the device.

When choosing the installation-spot, please make sure that the device is not exposed to extreme heat, moisture or dust. There should not be any cables lying around. You endanger your own and the safety of others!

The minimum distance between light-output and the illuminated surface must be more than 0,8 m.

Make sure that the area below the installation place is blocked when rigging, derigging or servicing the fixture.

Always fix the fixture with an appropriate safety-rope. Fix the safety-rope at the correct holes only.

Only operate the fixture after having checked that the housing is firmly closed and all screws are tightly fastened.

The lamp must never be ignited if the objective-lens or any housing-cover is open, as discharge lamps may explose and emit a high ultraviolet radiation, which may cause burns.

The maximum ambient temperature $t_a$ = 45° C must never be exceeded. Otherwise, the lamp is switched off and the fixture is out of operation for 5 minutes.

***CAUTION!***
***The lens has to be replaced when it is obviously damaged, so that its function is impaired, e. g. due to cracks or deep scratches!***

Operate the device only after having familiarized with its functions. Do not permit operation by persons not qualified for operating the device. Most damages are the result of unprofessional operation!

***CAUTION!***
***The lamp has to be replaced when it is damaged or deformed due to the heat!***

Wait at least 15 minutes before removing the lamp.

Please use the original packaging if the device is to be transported.

Please consider that unauthorized modifications on the device are forbidden due to safety reasons!

If this device will be operated in any way different to the one described in this manual, the product may suffer damages and the guarantee becomes void. Furthermore, any other operation may lead to dangers like short-circuit, burns, electric shock, burns due to ultraviolet radiation, lamp explosion, crash etc.

# 3. Description of the device

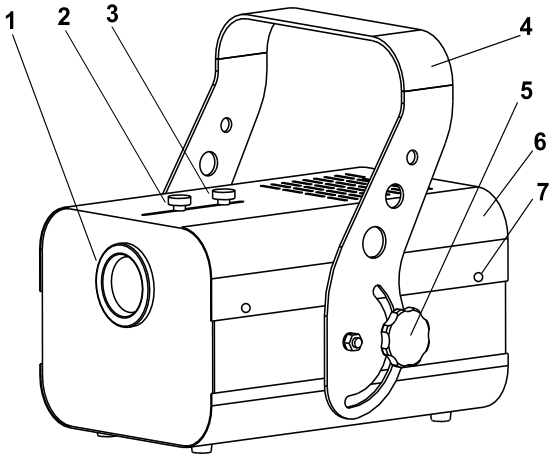


**1** - Lens
**2** - Zoom-screw
**3** - Focus-screw
**4** - Bracket
**5** - Bracket-screw
**6** - Housing
**7** - Fastening screws

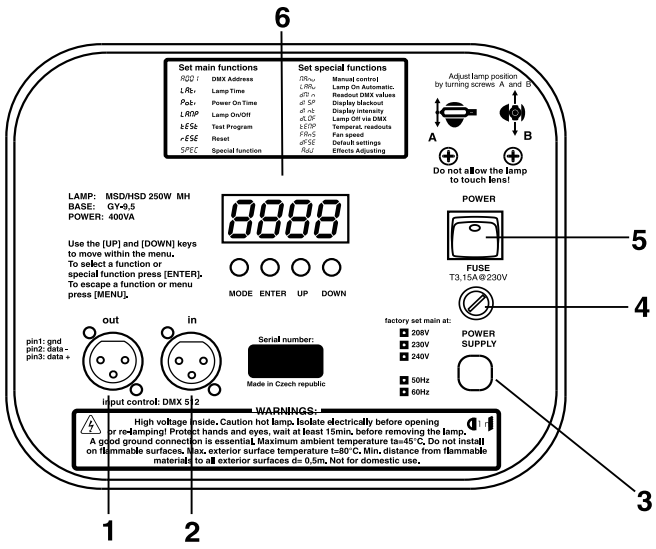


**Rear panel:**
**1** - DMX output
**2** - DMX input
**3** - Power cable
**4** - Fuseholder
**5** - Power switch
**6** - Control Board

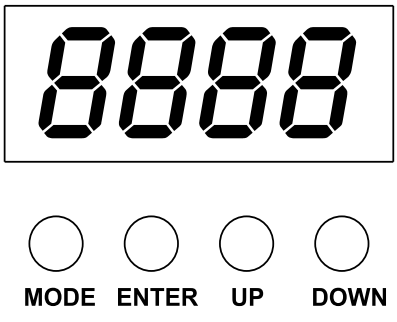


**Control board**

# 4. Installation

## 4.1Fitting/Exchanging the lamp

***DANGER !***
***Install the lamps with the device switched off only.***
***Unplug from mains before !***

To insert the lamp (MSD 250 GY-9,5 or MSD 250/2, GY-9,5) open the housing by loosening the fastening screws at the side panels and by removing the focus-screw and zoom-screw.
If changing the lamp, remove the old lamp from the socket. Insert the new lamp to the socket.
Do not install a lamp with a higher wattage! A lamp like this generates temperatures the device is not designed for. Damages caused by non-observance are not subject to warranty. Please follow the lamp manufacturer's notes!
Do not touch the glass-bulb bare hands during the installation! Make sure that the lamp is installed tightly into the lampholder system.
Adjust the optimal distance 1-1.5 mm from the lens by turning the screw **„A"** (see the drawings „Lamp adjustment" below).
Replace the housing cover and tighten the screws.

***Do not operate this fixture with opened housing-cover!***

## 4.2 Lamp adjustment

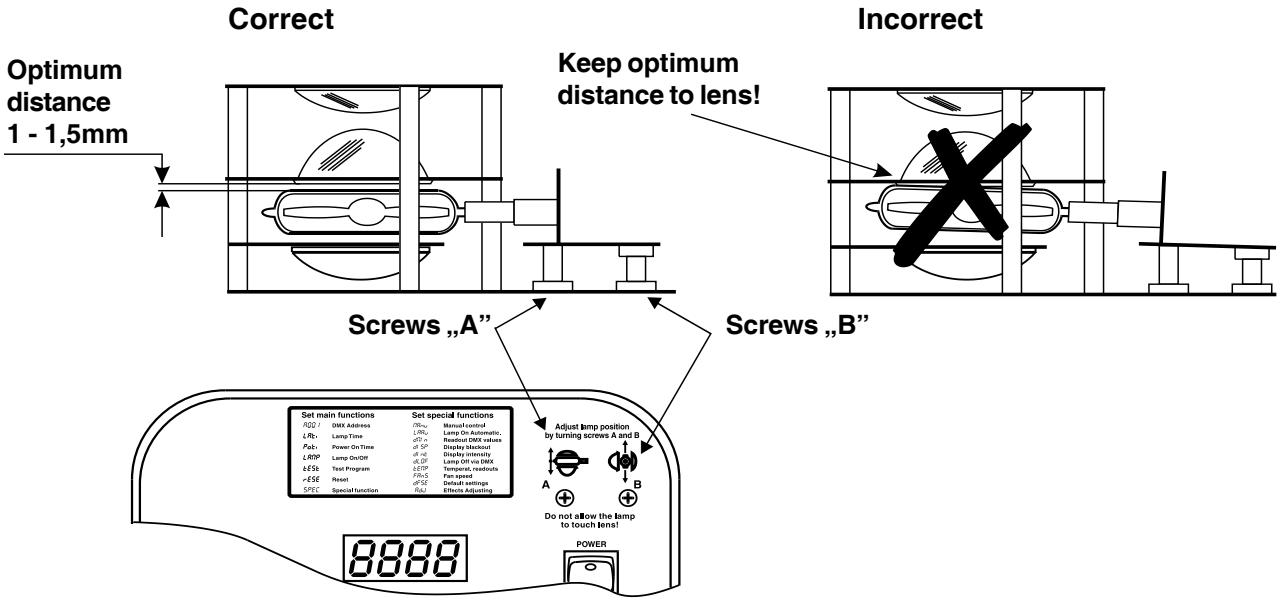


The BEAM 250 XT lampholder is aligned at the factory. Due to differences between lamps, fine adjustment may improve light performance.
Strike the lamp and focus the light on a flat surface (wall). As the optimum distance of lamp from lens was adjusted during the installing or changing the lamp (by turning the screw „A"), it is necessary to adjust only the second position by turning the screw **„B"**, in order to center the hot-spot (the brightest part of the beam).
If the Hot Spot seems to be too bright, you can lower its intensity by moving the lamp closer to the reflector. Do so by turning srew **„A"** until the light is evenly distributed.
If the light on the edge seems to be brighter as in the center, the lamp is too close at the reflector. In this case, you need to move the lamp away from the reflector until the light is evenly distributed and the beam appears bright enough.

## 4.3 Inserting/Exchanging the gobos

***DANGER!***
***Install the gobos with the device switched off only.***
***Unplug from mains before!***

In order to exchange the gobos open the housing by loosening the fastening screws at the side panels and by removing the focus-screw and zoom-screw.

If you wish to use other forms and patterns as the standard-gobos, or if gobos are to be exchanged, please follow the instructions below:

1.Unscrew one of the Gobo-screws and loosen the other two. Replace the desired gobo.

2.Replace the housing cover and tighten the screws.

## 4.4 Rigging the fixture

***Danger of fire !***
***When installing the device, make sure there is no highly inflammable material (decoration articles, etc.) in between a distance of min. 0,5 m.***

Attach the mounting-bracket to the projector by using the enclosed fixation screws.

Mount the projector with the mounting-bracket to your trussing system. The hole in the mounting bracket has a diameter of 10 mm.

For overhead use, always install a safety-rope that can hold at least 10 times the weight of the fixture.

Adjust the desired inclination-angle via the mounting-bracket and fix the bracket-screws tightly.

***Make sure that the device is fixed properly! Ensure that the structure to which you are attaching the projectors is secure.***

For overhead use, fit a safety chain or cord.

## 4.5 Connection to the mains

Connect the fixture to the mains with the enclosed power cord and plug.
The earth has to be connected!

**The occupation of the connection-cables is as follows:**

| Cable (EU) | Cable (US) | Pin | International |
|---|---|---|---|
| Brown | Black | Live | L |
| Light blue | White | Neutral | N |
| Yellow/Green | Green | Earth | ⏚ |

## 4.6 DMX-512 connection/connection between fixtures

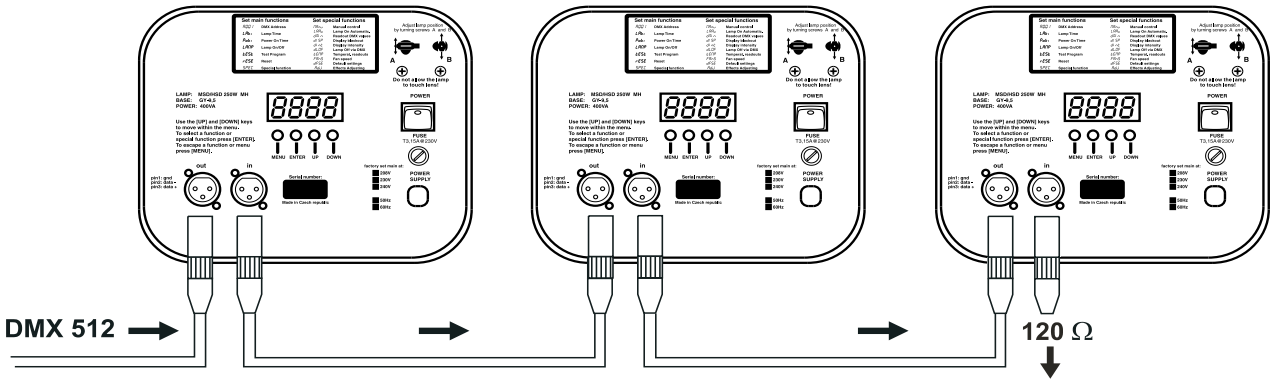


***The wires must not come into contact with each other, otherwise the fixtures will not work at all, or will not work properly.***

Only use a stereo shielded cable and 3-pin XLR-plugs and connectors in order to connect the controller with the fixture or one fixture with another.

### Occupation of the XLR-connection:

**DMX - output**

**XLR mounting-socket:**

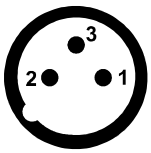


**1** - Ground
**2** - Signal (-)
**3** - Signal (+)

**DMX-input**

**XLR mounting-plug:**

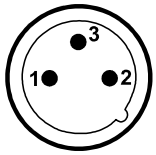


**1** - Ground
**2** - Signal (-)
**3** - Signal (+)

If you are using the standard DMX-controllers, you can connect the DMX-output of the controller directly with the DMX-input of the first fixture in the DMX-chain. If you wish to connect DMX-controllers with other XLR-outputs, you need to use adapter-cables.

### Building a serial DMX-chain:

Connect the DMX-output of the first fixture in the DMX-chain with the DMX-input of the next fixture. Always connect one output with the input of the next fixture until all fixtures are connected.

**Caution:** At the last fixture, the DMX-cable has to be terminated with a terminator. Solder a 120 Ω resistor between Signal (–) and Signal (+) into a 3-pin XLR-plug and plug it in the DMX-output of the last fixture.

## 5. DMX protocol

| Channel | Value | Function | Type of control |
|---|---|---|---|
| **1** | | **Colour-wheel** | |
| | 0 | White/open | proportional |
| | 10 | Turquoise | proportional |
| | 21 | Red | proportional |
| | 32 | Cyan | proportional |
| | 42 | Light green | proportional |
| | 53 | Magenta | proportional |
| | 64 | Light blue | proportional |
| | 74 | Yellow | proportional |
| | 85 | Green | proportional |
| | 96 | Pink | proportional |
| | 106 | Blue | proportional |
| | 117 | Orange | proportional |
| | 128-255 | Rainbow effect from slow to fast | proportional |
| **2** | | **Effect-wheel** | |
| | 0-20 | Full open | step |
| | 21-42 | Colour temperature correction filter 3200 K | step |
| | 43-63 | Colour temperature correction filter 5600 K | step |
| | 64-84 | Magenta | step |
| | 85-106 | Cyan | step |
| | 107-127 | Yellow | step |
| | 128-148 | UV filter | step |
| | 149-170 | Gobo 1 | step |
| | 171-191 | Gobo 2 | step |
| | 192-212 | Beam reducer 1 | step |
| | 213-234 | Beam reducer 2 | step |
| | 235-255 | Beam reducer 3 | step |
| **3** | | **Shutter,strobe** | |
| | 0-127 | Open,From max.speed of fan to min. speed of fan | proportional |
| | 128-139 | Open,Switch On the lamp,Reset | step |
| | 140-148 | Closed | step |
| | 149 | Closed in reverse position | step |
| | 150-219 | Strobe-effect from slow to fast (max. 8 FPS) | proportional |
| | 220-229 | Open position | step |
| | 230-239 | Shutter is in half position of the beam,Lamp Off after 3 sec. | step |
| | 240-255 | Open position | step |
| **4** | | **Dimmer** | |
| | 0 | Closed,Light is full Off | step |
| | 1-126 | Smooth dimming from black to full open | proportional |
| | 127 | Full open-sharp beam | step |
| | 128-192 | Smooth dimming from full open to black | proportional |
| | 193-254 | Smooth dimming from black to full open (frost light) | proportional |
| | 255 | Full open-frost light | step |

# 6. Addressing

The Control Board on the rear side of the BEAM 250 XT allows you to assign the DMX fixture address, which is defined as the first channel from which the BEAM 250 XT will respond to the controller.
If you set, for example, the address to channel 5, the BEAM 250 XT will use the channel 5 to 8 for control.
Please, be sure that you don't have any overlapping channels in order to control each BEAM 250 XT correctly and independently from any other fixture on the DMX data link.
If two, three or more BEAM 250 XT are addressed similarly, they will work similarly.

### For address setting follow this procedure:

**1.** Switch on the BEAM 250 XT and wait until the fixture reset has finished (**„rSt“** is flashing at the display).
**2.** Press the **[Mode]** key in order to access the main menu. Browse through the menu by pressing the **[Up]** and **[Down]** keys until the display shows **„A001“**. Confirm by pressing **[Enter]** key and the letter **„A“** will flash.
**3.** Use the **[Up]** and **[Down]** keys to select the desired address.
**4.** Confirm by pressing **[Enter]** or **[Mode]** to cancel.

### Controlling:

After having addressed all BEAM 250 XT, you may now start operating these via your lighting controller.
**Note:**
After switching on, the BEAM 250 XT will automatically detect whether DMX 512 data is received or not. If there is no data received at the DMX-input, the display will start to flash **„A001“** with actually set address.
**This situation can occur if:**
- the 3 PIN XLR plug (cable with DMX signal from controller) is not connected with the input of the BEAM 250 XT
- the controller is switched off or defective, if the cable or connector is defective or the signal wires are swap in the input connector.

**Note:**
It's necessary to insert the XLR termination plug (with 120 Ohm) in the last lighting in the link in order to ensure proper transmission on the DMX data link.

# 7. Remotely controllable functions

## 7.1 Lamp

The BEAM 250 XT is to be operated with a MSD /HSD 250 or MSD 250/2 GY-9.5 lamp.
A relay inside of the BEAM 250 XT allows you to switch on and off the lamp via the Control Board on the rear side or via your controller without affecting the rest of the lighting.

## 7.2 Switching on and off the lamp via the control board

**1.** Switch on the BEAM 250 XT and wait until the fixture reset has finished.
**2.** Press the **[Mode]** key in order to access the main menu. Browse through the menu by pressing the **[Up]** and **[Down]** keys until the display shows **„LAMP“**. Confirm by pressing **[Enter]** key.
**3.** Use the **[Up]** and **[Down]** keys to select **„On“** for switching on the lamp and **„Off“** for switch off the lamp and press **[Enter]** to confirm or **[Mode]** to cancel.

**Note:**
It is also important to note that the discharge lamp is a cold restrike type, which means that it has to be cold before re-striking. For this reason, you have to wait 5 minutes (max. speed of fan must be adjusted) after having switched off the lamp before you can switch it back on again. If you try to switch on the lamp within 5 minutes after having switched it off, the BEAM 250 XT will store this information and automatically ignite the lamp when the 5 minutes period has expired. The message **„HEAt“** will appear on the control board display at the back side of the BEAM 250 XT. If the ignition of the lamp is seven times unsuccessful, on the display will appear **„LA.Er“**, meaning that the lamp could be damaged or even missed, or there could be a failure on the ignitor or ballast.

## 7.3 Colour-wheel

The BEAM 250 XT features a colour-wheel with 12 color positions - 11 of these with dichroic colors and the last one open. The wheel can be positioned between two adjacent colors in any position. It is also possible to rotate the color-wheel continuously at different speeds - the so-called „Rainbow effect" is created.

## 7.4 Effect-wheel

This wheel has both hot and cold color temperature filters (3200 K and 5600 K), UV filter. Cyan, Magenta and yellow filters for color mixing with color wheel allowing another 36 colors. Two replaceable gobos and three beam reducers. The gobos have an outside diameter of 26.9 mm and an image diameter of 22.5 mm.

## 7.5 Shutter

The shutter unit enables to produce strobo effect from 1 to 8 flashes per seconds.

## 7.6 Dimmer / Washlight

0 - 100 % smooth dimming to sharp beam or „wash" light is provided by the special dimmer unit.

## 7.7 Fan

The BEAM 250 XT is cooled by one axial fan. The speed of the fan (and of course the noise) can be continuously reduced if very quiet performance is required.
By the Control Board using the **„FAnS"** function you can choose 4 types of the fan speed operating modes:

**1. „HIGH" - high speed of the fan**
The cooling fan works on max. speed (max. cooling).

**2. „reG" - continuous controlling of the fan speed**
The fan automatically raises its speed in order to control inside temperature of the lighting, if the temperature inside increases about certain level (the low fan speed reduces the cooling of the lighting). This cycle can repeats several times until the temperature inside is on suitable level.

**3. „Lo.OF" - low speed / Switch off the lamp**
The fan keeps the adjusted low speed until the temperature exceeds max. inside temp. then the BEAM 250 XT automatically switches off the lamp.

**4. „Lo.HI"- low/high speed of the fan operating**
The fan keeps the adjusted low speed until the temperature exceeds max. inside temp. of the fixture, then the BEAM 250 XT automatically switches from low to high the fan speed.

# 8. Control Board

The control board situated on the rear panel of the BEAM 250 XT offers several features. You can simply set the lighting address, read the number of lamp or unit hours, switch on and off the lamp, run test show, make a reset and also use special functions for manual control and service purposes.
The main menu is accessed by pressing the **[Mode]** key - press this one so many times until the display shows message **„A001"** (with actually stored address). Browse through the menu by the pressing **[Up]** and **[Down]** keys - the display shows step by step these messages: **„A001, Lati, Poti, LAMP, tESt, rESE, SPEC"**. Press **[Enter]** if you wish to select one of them. The functions provided are described in the following sections and the function hierarchy is shown below.




## 8.1 Main functions




**DMX 512 Address settings**

The letter **"A"** flashes. Use the **[Up]** and **[down]-** keys to select required address (001 - 499) and press **[Enter]** to confirm or **[Mode]** to cancel and return to the main menu.




**Lamp On time**

This option enables you to read the total number of hours that the lamp has been powered On. Press **[Enter]** or

**[Mode]** to return to the main menu. In order to reset the counter to 0, you have to hold the **[Up]** and **[Down]**-button and press the **[Enter]**-button.




**Power On time**

By this option you can read the total number of hours that the BEAM 250 XT has been powered On. Press **[Enter]** or **[Mode]** to return to the main menu.




**Switch On/Off the lamp**

Use the **[Up]** or **[Down]**-key to select **"On"** if you wish the switch On the lamp or **"Off"** if you wish switch Off the lamp and press **[Enter]** to confirm or **[Mode]** to cancel and return to the main menu.




**Test program**

This function allows you to run a special test program without an external controller, which will show you some possibilities of using BEAM 250 XT. Press **the [Enter]**-key to run the test program.




**Reset Function**

Press **[Enter]** key to run reset. This option enables the BEAM 250 XT to index all effects (functions) and return to their standard positions.

## 8.2 SPEC -Special functions




Use the **[Up]** or **[Down]**-key to browse through the special functions and select the one by pressing **[Enter]**.

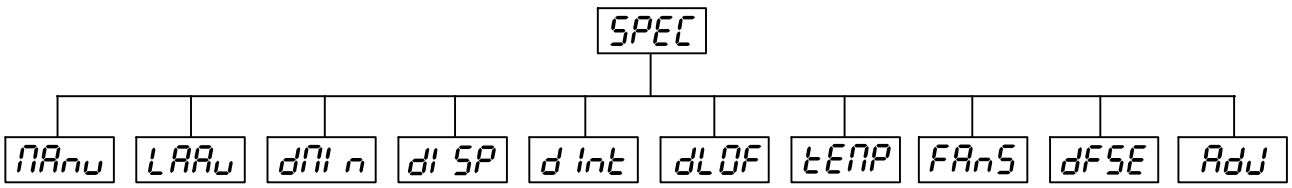





**Manual control of effects**

This function allows you to control manually the channel functions of the fixture. Use the **[Up]** and **[Down]** keys to select desired function and press **[Enter]** to adjust the effect or **[Mode]** to cancel and return to the menu.

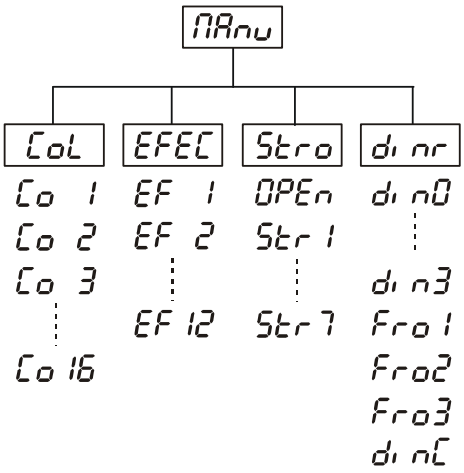





**Lamp On automatically**

This function enables to switch On the lamp automatically after switching On the fixture. Use the **[Up]** or **[Down]** keys to select **"On"** if you wish to switch On the lamp automatically after switching On the fixture or **"Off"** if you wish the lamp off after switching On the fixture and press **[Enter]** to confirm or **[Mode]** to cancel and return to the menu.




**DMX values**

Readout DMX values of each channel received by the fixture. Use the **[Up]** or **[Down]**-keys to select desired channel and press **[Enter]** to read its value coming to the fixture or **[Mode]** to cancel and return to the menu.

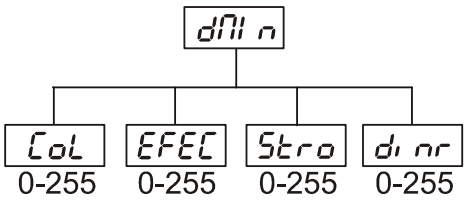





**Automatic blackout of the display**

This function allows you to keep the display On or to turn Off automatically 2 minutes after last pressing any key on the control board. Use the **[Up]** or **[Down]**-key to select **"On"** if you wish to keep the display On or **"Off"** if you wish to turn Off automatically 2 minutes after last pressing any key on the control board and press **[Enter]** to confirm or **[Mode]** to cancel and return to the menu.




**Display intensity**

By this function you can adjust from 20% to 100% the intensity of the display. Use the **[Up]** or **[Down]**-key to select the level of the display intensity and press **[Enter]** to confirm or **[Mode]** to cancel and return to the menu.




**Lamp Off via DMX**

This function allows you to switch Off the lamp by DMX. Use the **[Up]** or **[Down]-**key to select **"On"** if you want to switch Off the lamp by DMX or **"Off"** if you don't want to switch Off the lamp by DMX and press **[Enter]** to confirm or **[Mode]** to cancel and return to the menu.




**Temperature**

Temperature readouts of fixture inside in Celsius. Inside temperatures below 74° C are not critical. 74° C and more lead to the lamp being switched off. Please note that the outside temperature should not exceed 45° C.




**Fan speed operating mode**

By using this function you can choose 4 types of fan speed operating modes. Browse through this menu by the pressing **[Up]** or **[Down]-**keys - the display shows step by step these messages: **"HIGH, reG, Lo.OF, Lo.HI,"**. Press **[Enter]** if you wish to select one of them or **[Mode]** to cancel and return to the menu.

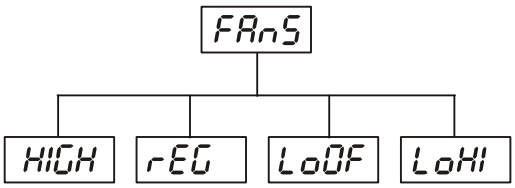





**high (max) speed of the fan**

The cooling fan works on max. speed (max. cooling)




**continuous controlling of the fan speed**

the fan automatically raises its speed in order to control inside temperature of the lighting,
if the temperature inside increases about certain level (the low fan speed reduces the cooling of the lighting). This cycle can repeat several times until the temperature inside is on suitable level.




**low speed/Switch Off the lamp operating**

the fan keeps the adjusted low speed until the temperature exceeds max. inside temperature, then the BEAM 250 XT automatically switch Off the lamp.




**low/high speed of the fan operating**

the fan keeps the adjusted low speed until the temperature exceeds max. inside temp.of the fixture, then the BEAM 250 XT automatically switches from low to high the fan speed.




**Default settings**

Press **[Enter]** to reset all fixture personalities (not the adjusting functions) to the default values. On the display will appear "**rSt**" meaning that the fixture makes the reset. See the table of personality setting and their default positions.

| Personality | Display | Default values (SHADED) |
|---|---|---|
| Lamp on automatically | LAMP | On |
| | | OFF |
| Automatic blackout of display | dISP | On |
| | | OFF |
| Display intensity | d Int | 20 40 60 80 100 |
| Lamp Off via DMX | dLOF | On |
| | | OFF |
| Fan speed operating mode | FAnS | HIGH |
| | | rEG |
| | | LoOF |
| | | LoHI |




**Adjusting the default positions of colour and effect wheels**

By this function you can calibrate and adjust the colour and effect wheels to their standard/right positions. Use the **[Up]** and **[Down]-**keys to browse through the adjusting menu - the display shows step by step these messages: **„CoL, EFEC, Stro, dimr, FCAL“** by which you can adjust the fixture to the required / desired position (0-255) before the function calibration. Then when the positioning is finished use the last **„FCAL“** function (Fixture calibration).

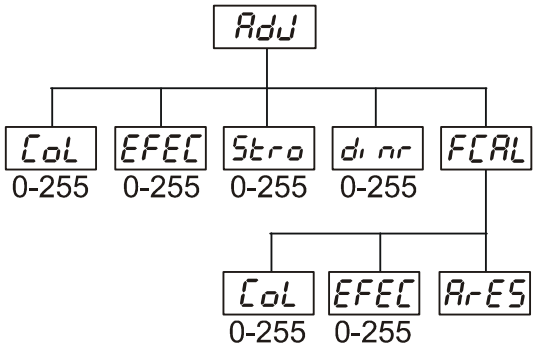


**1. Calibration via the control board**

Press **[Enter]** and the **[Up]** or **[Down]-**key in order to display the following messages: **„CoL, EFEC“** for very smooth function calibration. Select one of them, press **[Enter]** and use the **[Up]** or **[Down]-**key in order to adjust their right value from 0 to 255. Then press **[Enter]** to confirm or **[Mode]** to cancel and return to the menu. This can be repeated for each calibration parameter if it is required. When the calibration is finished, it is necessary to use the **„ArES“** function in order to write the calibration values to the memory (EEPROM) and to make a reset in order to check the newly adjusted positions of the colour and effect wheels. When the reset of the fixture is finished, the display will show the **„FCAL“** message. Press **[Enter]** to repeat the calibration or **[Mode]** to return to the **„AdJ“** menu.

**2. Calibration via the external controller**

Press **[Enter]** and the **[Up]** or **[Down]-**key in order to display the following messages: **„CoL, EFEC“** - calibration parameters. Select one of them and press **[Enter]**.

Now you can calibrate the colour and effect wheel by your controller. The DMX calibration protocol is described

in the table mentioned below.

**DMX Calibration protocol:**

| DMX Channel | 1 | 2 | 3 | 4 | 5 | 6 |
|---|---|---|---|---|---|---|
| Function | COLOURS | EFECTS | STROBO | DIMMER FROST | COLOURS | EFECTS |
| | STANDARD PROTOCOL | STANDARD PROTOCOL | STANDARD PROTOCOL | STANDARD PROTOCOL | CALIBRATION 0 - 255 | CALIBRATION 0 - 255 |
| | | | | | Smooth Microstep Movement | |

After having calibrated required functions press **[Enter]** to confirm (or **[Mode]** to cancel and return to the menu without reset by the **"ArES"** function) and use the **"ArES"** function in order to write the calibration values to the memory (EEPROM) and to make a reset in order to check the new adjusted positions of the colour and effect wheels .

# 9. Error and information messages

***HEAt***

This message appears if you try to switch on the lamp within 5 minutes after having switched it off (the lamp is too hot). The message will appear on the display if the lamp doesn't ignite within 28 seconds. The BEAM 250 XT will store this information and automatically ignite the lamp when the 5 minutes period has expired.

***LAEr***

The ignition of the lamp is seven times unsuccessful (the HEAt message appeared six times before), and the display shows **"*LAEr*"**, meaning that the lamp could be damaged or even missed, the fixture is overheating (this can occur if the ambient temperature is 45° C or more) or there could be a failure on the ignitor or ballast. Please place or replace the lamp, check the ambient temperature or contact your dealer if the situation was not caused by the lamp.

***FAn***

The message informs you that the fixture was overheating and switched off. This message will appear on the display if the fan speed operating "LOOF" was selected.

***MbEr***

This messsage informs you that the main PCB does not communicate correctly with the Control Board.

***CoEr* (color-wheel error)**

This messsage will appear after the reset of the fixture if the magnetic-indexing circuit malfunctions (sensor failed or magnet missing) or the stepping-motor is defective (or its driver circuit on the main PCB). The color-wheel is not located in the default position after the reset.

***EFEr* (effect wheel error)**

This messsage will appear after the reset of the fixture if the magnetic-indexing circuit malfunctions (sensor failed or magnet missing) or the stepper motor is failed (or its driver circuit on the main PCB). The effect wheel is not after the reset in the default position.

***FtEr***

This error message informs you that the fixture was overheating (occured if the ambient temperature is 45° C or more) and that the relay switched off the lamp. This message will appear on the display until the temperature will be on a suitable level, then the display will show the "*HEAt*" message meaning the lamp is too hot (explanation see above).

***SnEr***

This message appears if the lamp lighting sensor is failed.

***PoEr***

This message will appear if the fixture was shortly disconnect from the main.

***FrEr***

It will appear if the frequency of the main is not standard 50 or 60Hz.

# 10. Technical specifications

**Power supply:**

Voltage.....230V AC, 50/60 Hz ~
-Fuse.....T 3,15 A@ 230 V
-Power consumption.....400 VA

**Motors:**

- 4 high quality stepping-motors controlled by microprocessors

**Lamp:**

-Philips MSD 250 or MSD250/2 GY9.5

**Optical system:**

-Double condensor lens with high efficiency parabolic mirror
-Mechanic zoom (11°-20°) and focus

**Beampath:**

**MAX. ZOOM**

**20° radiation angle**

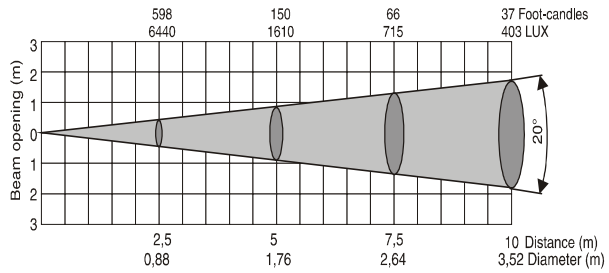


**20° radiation angle with frost**

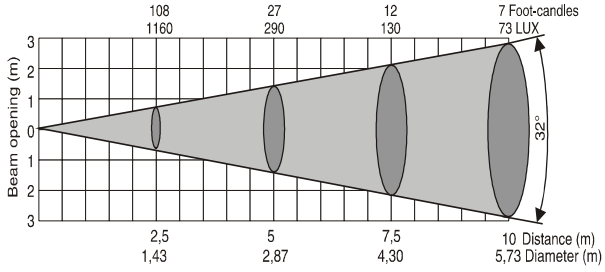


**MIN. ZOOM**

**11° radiation angle**

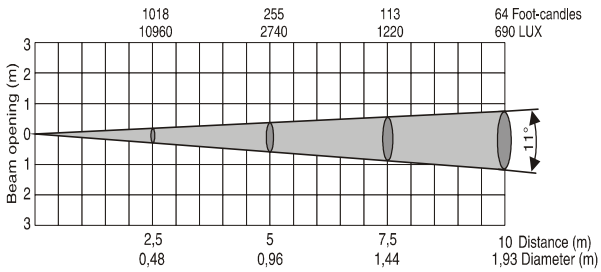


**11° radiation angle with frost**

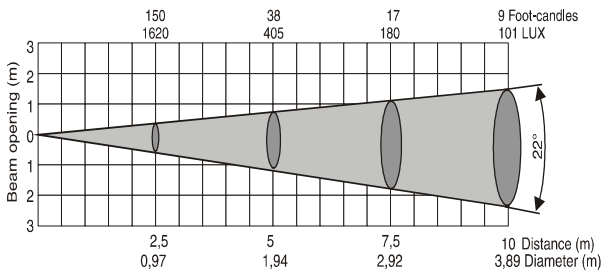

**Colours:**

- 11 dichroic-filters plus white
- Effect-wheel with cyan, magenta and yellow for additive colour-mixing
- 2 additional correction-filters for additive colour-mixture (3200 K und 5600 K)
- 72 colours with 72 half-colours
- Integrated UV-filter
- Colour-wheel with adjustable rotation-speed and rainbow-effect

**Gobos:**

- 2 interchangeable static gobos
- Outside diameter 26.9mm ,image diameter 22.5 mm

**Dimmer/Strobe:**

- Linear mechanical dimmer
- Dimmable from 0 % - 100 %
- Strobe-effect with adjustable speed (1 - 8 flashes per second)
- Frost-filter

**Electronics:**

-Addressing, special functions setting, effects calibration via control panel with 4-digit LED display
-Readout fixture and lamp usage, receiving DMX values, temperature, etc
-Built-in analyzer for easy fault finding,error messages
-Remotely switching of the lamp
-Bilt-in demo sequences
-Silent fans cooling, remotely controllable speed of fans
-Self-resetable thermo-fuse
-Digital serial input DMX-512
-DMX-control via every standard DMX controller
- 4 DMX-channels
  - Channel 1: Colour-wheel
  - Channel 2: Effect-wheel
  - Channel 3: Shutter,strobe
  - Channel 4: Dimmer

**Temperatures:**

-Maximum ambient temperature $t_a$: 45° C
-Maximum housing temperature $t_B$ (steady state): 80° C

**Minimum distances:**

Min.distance from flammable surfaces: 0,5m
Min.distance to lighted object: 0,8m

**Housing**

- Easy access to lamp and main components thanks to large opening cover and the projector‘s modular construction.

**Dimensions:**

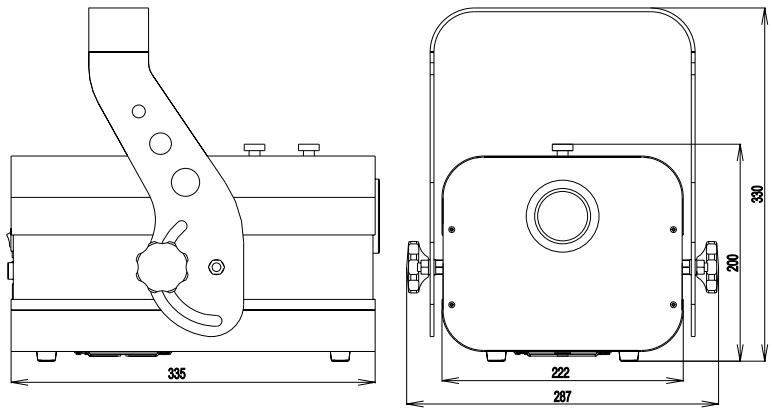

**Weight:**

10.5 kg

## 11. Maintenance and cleaning

It is absolutely essential that the fixture is kept clean and that dust, dirt and smoke-fluid residues must not build up on or within the fixture. Otherwise, the fixture‘s light-output will be significantly reduced. Regular cleaning will not only ensure the maximum light-output, but will also allow the fixture to function reliably throughout its life.
A soft lint-free cloth moistened with any good glass cleaning fluid is recommended, under no circumstances should alcohol or solvents be used!

***DANGER !***
***Disconnect from the mains before starting any maintenance work***

The objective lens will require weekly cleaning as smoke-fluid tends to building up residues, reducing the light-output very quickly. The cooling-fan should be cleaned monthly.

The gobos may be cleaned with a soft brush. The interior of the projector should be cleaned at least annually using a vacuum-cleaner or an air-jet.
The dichroic colour-filters, the effect-wheel and the internal lenses should be cleaned monthly.

### Replacing the fuse

If the lamp burns out, the fine-wire fuse of the device might fuse, too. Only replace the fuse by a fuse of same type and rating.
Before replacing the fuse, unplug mains lead.
**Procdure:**
Step 1: Unscrew the fuseholder on the rear panel with a fitting screwdriver from the housing (anti-clockwise).
Step 2: Remove the old fuse from the fuseholder.
Step 3: Install the new fuse in the fuseholder.
Step 4: Replace the fuseholder in the housing and fix it.

## 12. Appendix

We believe you will enjoy your BEAM 250 XT. We assure you will enjoy this product for years if you follow the instructions given in this manual.

If you have any questions and comments, please do not hesitate to contact us.

**Please note:** errors and omissions for every information given in this manual excepted. Every information is subject to change without prior notice. Any claim due to missing or wrong information in this manual is herewith excluded!