Model 3

OPERATION MANUAL



CONTENTS PAGE

Introduction 1
About this manual 1
Section 1—
The Controls: where they are and how they work .. 2
Input selector 2
EQ 2
Channel Assignment 2
Pan 2
Fader 2
Section 2—
Inputs and Outputs: where they're connected 3
Direct Out 3
Cue Out 3
Submix In 3
Line In 3
Phono In 3
Mic In 3
Buss In 3
Access Send/Rec 3
Mon In 3
Aux Out/Line Out 3
Section 3—
Subsystems: controls that work together 4
8 x 2 Submixer 4
4 x 2 Monitor Mixer 4
Section 4—
Some common recording hook-ups 6
Part 1:
Using the Model 3 with a 4-track tape recorder 6
Part 2:
Using the Model 3 with an 8-track tape recorder ... 10
Section 5—
The Model 3 Goes PA! 11
Section 6—
Disco 12
Block Diagram 14
Specifications 15

WARNING:
TO PREVENT FIRE OR SHOCK HAZARD, DO NOT EXPOSE THIS APPLIANCE TO RAIN OR MOISTURE.

Introduction

Fulfilling the needs of people with more talent than money is the fundamental premise on which TEAC Tascam Series recording gear is built. So we designed the Model 3 to be as versatile as possible, with the right combination of features and functions for home or studio recording, PA or disco mixing. The Model 3 just about does it all. You'll find it a surprisingly functional mixer, and it's with a certain pride that we now begin to tell you how it works, and some of the many things you can do with it.

The Model 3 is manufactured in our professional products division, and incorporates the same design philosophy as the highly successful TEAC Tascam Series Model 10 mixing console. Many of the parts, circuits, and production assembly procedures are the same. Also, the design alternatives that were chosen for cost purposes were exhaustively researched and tested to avoid any compromise in performance.

About this manual

Because of its unique design, the Model 3 will probably be used by people with little mixing experience as well as people with lots of mixing experience. If mixers are new to you, this manual will tell you more than enough to get you started, plus we've listed some other sources of information below. If you have had a lot of mixing experience, this manual might seem a little drawn out. Please bear with us.

The Model 3 is an audio mixer. Probably the easiest way to think of it is as a switching matrix for routing and re-routing audio signals. Are selectively switchable to several outputs — some inputs and outputs are fixed (non-switchable, but nevertheless selectable). Additionally, you can control the relative level and shape of these audio signals — individually, or in combinations. So you have both quantitative and qualitative *control* over what comes into the Model 3 and what goes out. You might think of it as a preamp with more controls and flexibility than you're probably used to having.

As you read through the manual, we suggest you pull out the back cover (it unfolds) and keep the block diagram visible so you can refer to, and picture the signal flow as you read the descriptive text.

Section 1 describes the controls, what they are and what they do — individually. Section 2 describes the inputs and outputs — where to make the connections for other gear. Section 3 describes the inter-relationships of certain switches, knobs and jacks which operationally form subsystems.

These first three sections are written with a recording application in mind — typical interface situations. Section 4 is an operational description of the Model 3 in a recording application. Section 5 is an operational description of the Model 3 in a PA application, and Section 6 describes a disco mixing application.

No manual is ever perfect, especially for as versatile a product as the Model 3. So if you'd like to have some more information, try some of the sources listed below, or contact your dealer or us. Enjoy your Model 3 and make good music — that's what it's all about for all of us.

A. Home made with TEAC.

An LP we produced on a 3340, a 3300 and a Model 2 mixer. It talks about how multitrack recording has influenced music, and how you can record at home. It's filled with tips on mic placement, echo, reverb, acoustics and the like. Available through your TEAC retailer.

B. THE WHITE PAPER.

An informative 24-page booklet about the technology of tape recorders. Helps you understand bias and equalization, metering systems, and the important interrelationships of the critical performance parameters. Free from your TEAC retailer, or direct from us.

C. Modern Recording Techniques.

An excellent introduction to the equipment, controls, and techniques used in modern studio recording. Written by Robert Runstein and published by Howard W. Sams & Co., Inc. Used as a text in seminars offered by and available through the Recording Institute of America, Inc., 15 Columbus Circle, New York, NY 10023.

D. TAB Books, Blue Ridge Summit, PA 17214.

Many fine publications covering subject material from general electronics theory to specific recording topics, including a thorough explanation of Setting Up and Using a Multichannel Recording Studio, by F. Alton Everest (#781; publication: fall, 1975). Write to publisher for catalogs and information.

Section 1. The controls: where they are and how they work.

Input section

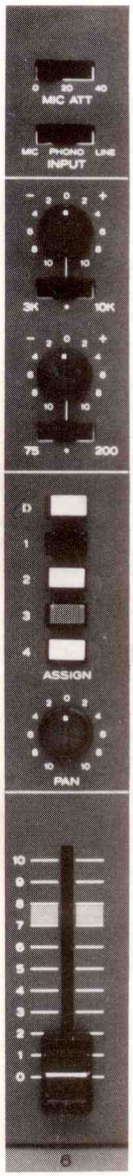

Attenuation: A 3-position switch for 0, 20, or 40dB of padding for MIC signals. The pad is located before the mic transformer and preamp to help prevent them from being overdriven, a common cause of distortion.

Input select: A 3-position switch that determines the signal to be passed — mic or line. The center position on inputs 1 thru 4 is OFF. The center position on inputs 5 thru 8 is for PHONO when a standard, magnetic cartridge turntable is plugged into the PHONO IN jacks on the rear panel.

Equalization: The peak and dip equalizers provide 15dB of boost or cut, continuously variable, at the following frequencies: 3 kHz or 10 kHz, selectable; 75 Hz or 200 Hz, selectable. The center position is OFF.

Channel assign: *D* is a direct output post EQ and fader when it is desirable to bypass the summing amplifiers. The color-coded, numbered channel assign buttons allow any signal to be assigned to ANY or ALL of the four output busses.

Pan: Whenever more than one output is assigned, PAN is automatically engaged. The apparent acoustic image may then be placed at its desired position within the panoramic perspective. Rotating the pan control COUNTER-CLOCKWISE moves the acoustic image towards the monitors connected with the lower numbered output busses. CLOCKWISE moves the image to the higher numbered busses. In most situations, you'll be panning in stereo — between two channels — but you can create some interesting effects by selecting 3 or all 4 assignment buttons in a 4-channel application (see diagram). In the normal situation, say between 1 and 3, you will notice approximately a 3dB drop when the pan cantrol is centered (O), and the signal is distributed equally between the monitors. This dip compensates for what would otherwise be an audible peak in the center. So, as you move the apparent acoustic image from extreme left to extreme right, you will notice a smooth, even pan.

Straight line fader: Regulates the overall send level of that input section. The shaded grey area on the fader scale represents the relatively optimum operating range of the fader — it is not a critical reference.

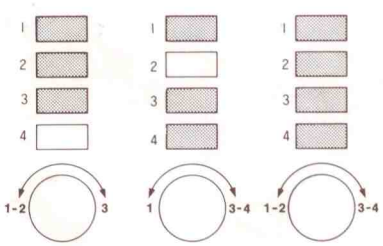

Typical examples of multichannel panning

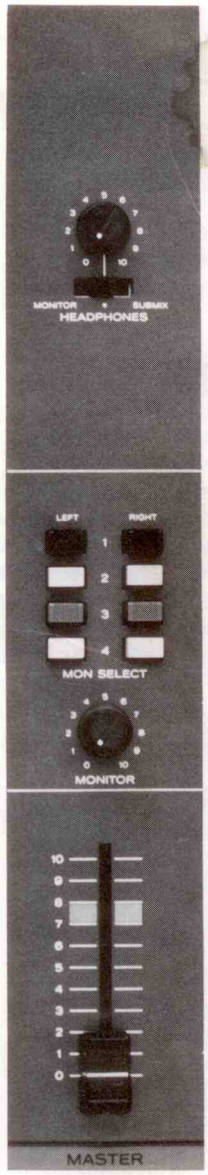

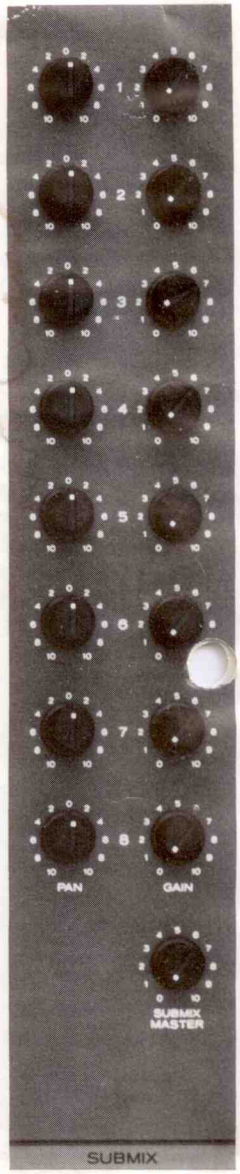

Master section

Headphones: A 3-position switch with level control that determines the output signal to be fed to the headphones. The center position is OFF. MONITOR is the signal from the MONITOR SELECT (4 x 2 mixer) circuit; SUBMIX is from the SUBMIX (8 x 2) section.

Monitor select: Acts as a 4 x 2 mixer, generally tied into the four output busses. The color-coded, numbered buttons allow you to select any signal assigned to the output busses and deliver it to the left, right, or both (center) control room monitors.

Monitor: A continuously variable level control for the monitor circuit.

Master fader: A 4-ganged pot for overall level control of the Model 3 program line output.

Submix section

For a full description of this section, see SECTION 3: SUBSYSTEMS, 8 x 2 MIXER.

Section 2. Inputs and outputs: where they're connected.

Please refer to the specifications, pg. 15 for nominal levels and impedances of the *Model 3* inputs and outputs. Some external equipment interfacing may require the addition of line amplifiers and/or transformers.

Input section

(typical of 8. Note differences on MIC INPUTS)

Direct out: Corresponds to *D* on an input section. When this button is depressed, the signal coming into that section is sent to the direct out jack—pre channel assign, post EQ and fader. These and all other RCA terminals are chassis mounted.

Cue out: A foldback after the mic preamp stage, unaffected by the input fader.

Submix in: Line level inputs to the SUBMIX section (8 x 2 mixer).

Line in: For a nominal high impedance line level source.

Phono in: (On input sections 5 thru 8) For a nominal high impedance magnetic cartridge turntable. The Model 3 is capable of handling two stereo turntables.

Mic in: (On input sections 1 thru 6) Low impedance, balanced mic input with XL-type connectors.

Mic in: (On input sections 7 and 8) High impedance, unbalanced mic input that accepts a ¼" phone plug.

Output section

Buss in: Normally used to provide a line level input to the program buss, after the channel assign network, for adding other signal processing devices. Additionally, these inputs can be used to cascade two Model 3's (or a Model 2 or 5) together—where the line outputs of one mixer would be connected to the buss inputs of the second.

Accessory send/receive: This patch point is pre-channel assign, post EQ and fader, and is typically used with external graphic equalizers, limiters, etc. Connect a cable from the SEND jack to the input of the device you're using—then from its output to the RECEIVE jacks.

IMPORTANT! When the accessory send/receive patch point is not in use, be sure the strapping plugs are properly connected.

Monitor in: Line level input to the 4 x 2 monitor mixer. Typically, connection is made from AUX OUT to MON IN.

Aux out/line out: The program busses of the Model 3 provide two jacks in parallel for each of the four outputs. You have the added flexibility of being able to send the signal to two places without an external Y patch.

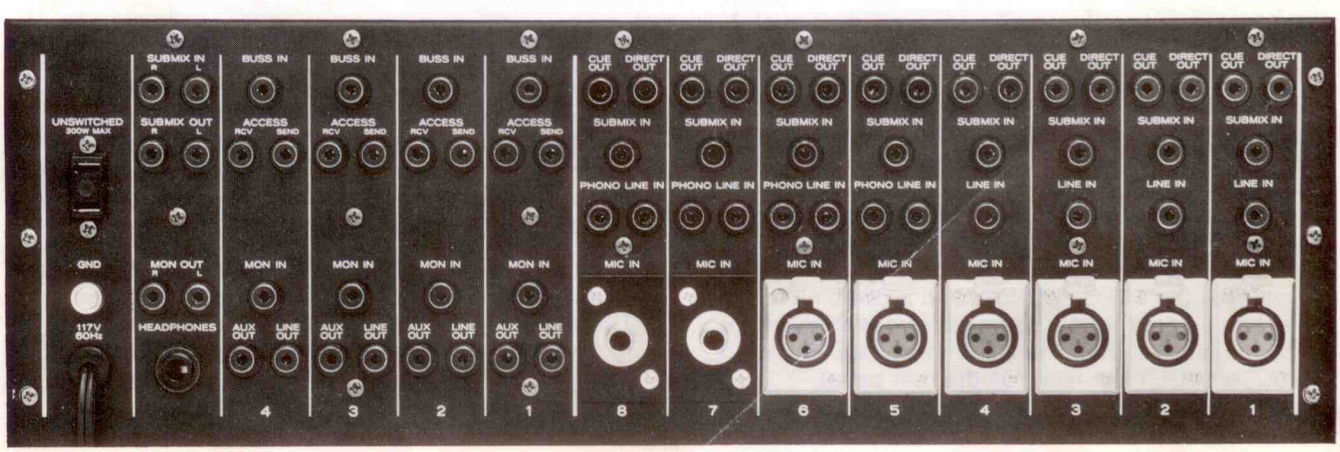

Additional inputs and outputs

Submix in: Normally used to provide a line level input to the 8 x 2 submixer after the summing amplifiers.

Submix out: Line level output from the 8 x 2 submixer.

Monitor out: Usually these outputs will provide the main stereo feed for the control room monitors via the 4 x 2 monitor mix circuit.

Headphones: A phone jack in parallel with the front panel jack marked HEADPHONES. Headphones can be connected directly to these jacks—a 1 Watt amplifier is provided internally (delivers 100 m Watt at front, 1 Watts at rear)—and the signal presented at these outputs is determined by the HEADPHONE SELECT switch on the master section.

Ground: Common grounding point for the Model 3, as required. If you're confronted with hum or RF problems when system connections are completed, take this grounding point and experiment with different terminations such as cold water pipes, another chassis, etc. While we cannot claim the Model 3 is absolutely RF-proof, we do know it works satisfactorily in a number of installations in relatively dense RF fields. If you do have RF problems, it may be because of interconnection errors, lack of proper system ground or a dense RF field.

Power cord: The AC mains should be connected to 117 V, 50/60 Hz. The Model 3 only draws 18 Watts from your local electric company. All connections of external equipment should be made prior to plugging the Model 3 in.

Section 3. Subsystems: controls that work together.

By this time you've probably noticed that various groups of controls form distinct sections and individual functions that the Model 3 provides. This section of the manual is devoted to the description of these subsystems. We've reproduced the appropriate portions of the block diagram within the text to help give you a clearer picture of the signal flow involved. Whenever you find it helpful, of course, relate any particular section to the full block diagram on the back fold-out page. The more familiar you are with the signal flow of the Model 3, the more versatile it will become.

8 x 2 Mixer: The Submix section forms an independent 8 x 2 mixer when connections are made between the CUE OUT and SUBMIX IN terminals on the rear panel, or when the LINE OUTPUTS of external machines (an 8-track recorder, for example) are connected to the SUBMIX INPUTS. On the Submix section, the gain and pan rotary pots are in complete control of the signal which is fed to the SUBMIX OUT terminals on the rear panel. If you connect the DIRECT OUTPUTS to the SUBMIX INPUTS, the 8 x 2 mixer is engaged post EQ and post fader. Depress the D channel assign button and the altered signal is fed to the 8 x 2 mixer. (NOTE: The DIRECT OUTPUTS are post EQ and fader, while the CUE OUTPUTS are foldbacks on the input.) To add to this subsystem's versatility, you can connect the LINE OUTPUTS of an 8-track tape recorder (like the TEAC Tascam Series 80-8) to the SUBMIX INPUTS and use the 8 x 2 mixer to provide an independent cue mix during overdub sessions. You can also connect any other combination of line level outputs to the submix inputs and get a cue mix. For example, you might want to connect the line outputs of a 4-track tape recorder (like the TEAC A-3340S) and a combination of other line outputs to mix sound effects with music or voice. All signals from the 8 x 2 mixer are routed to the SUBMIX OUT terminals on the rear panel.

4 x 2 Monitor mixer: This is a 4 x 2 line level mixer. When the channel assign buttons on the front panel are depressed, the selected signals are presented at the AUX OUT and LINE OUT terminals, and may be fed into the 4 x 2 mixer by making connections between one of these outputs and the appropriate MON IN terminal. You may then route these signals to the right, left or both monitor channels (presented at MON OUT, R & L).

Input level controls: The mic attenuator and input fader work together to maintain the optimum operating range of the input signal. The practical parameters of distortion, signal-to-noise, and headroom are determined by these controls. You'll adjust them often. As an example, suppose you have a mic in input 1, your fader is set in the shaded grey area, and the attenuator is at the −20 position. The VU meter shows the needle at the +3 position. You could change the attenuator to −40, but a better adjustment would be to move the fader down slightly to a more optimum operating range.

Equalization: You have 4 selectable frequencies per input, each of which can be boosted or cut 15dB. You can see from the characteristics of the slopes that frequencies other than the one selected are obviously affected. We've included a chart of the frequency response characteristics of some common musical sounds, so you can get a better idea how these tone controls can be put to their best artistic advantage. Of course, using them and hearing the results will tell you exactly how they work.

Channel assignment & pan: Assigning more than one output channel automatically engages the pan control. The apparent acoustic image may then be placed at its desired location within the panoramic perspective.

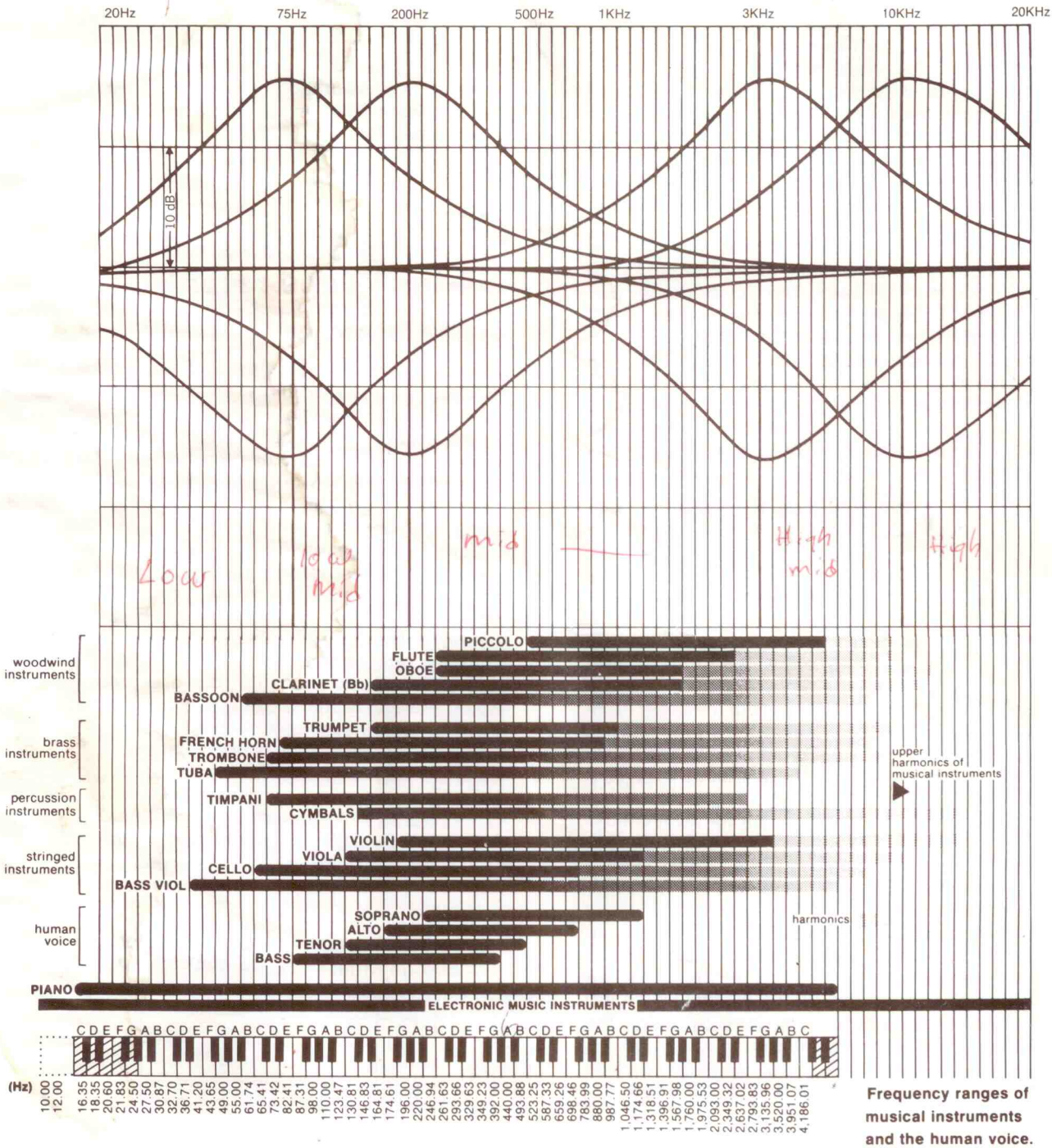

Frequency ranges of musical instruments and the human voice.

Section 4. Some common recording hook-ups.

This section will help you get started, but don't let your enthusiasm get in the way of your good judgment, particularly if you are new to multitrack recording. Read this section a few times and you'll reduce your chances of making careless mistakes.

We're going to show you a few examples that will give you a good idea of how the Model 3 works. They are not rules—merely basic guidelines meant to spur your imagination. What's important now is the concept of SIGNAL FLOW. Once you know the signal flow in the Model 3, you'll see the great number of hook-up variations that are possible.

SIGNAL FLOW is just what the name implies—how the signals travel from one place to another, and what happens to them in between. The EQ and fader controls affect the signal flow, just as channel assignment determines the direction of a given signal.

To see a graphic representation of signal flow, look at the block diagram on page 14. The signals enter at an input point and move along to an output point. As you read our hook-up suggestions, refer to the block diagram. In a short time, you'll see how simple many hook-ups really are.

Mechanics of creative recording. Before getting into specific hook-ups, you should be aware that there are three parts in making a recording: original recording (basic tracks), overdubs, and mixdown. Prepare yourself, overdub and mixdown sessions are usually the longest.

During each part, you'll be concerned with three more things. First, you'll periodically want to monitor what is coming off the tape. This is usually done by switching the monitor switch on your recorder from SOURCE to TAPE and back again. This procedure is important to make sure you are getting what you want on the tape. It saves a lot of the heartache of finding out too late that you forgot to make a patch somewhere. (Of course, it's also important for level checks, etc.)

The next thing to remember is that you'll need a control room mix and a cue (musician's) mix. Sometimes these are the same, and they are most important during overdub sessions. The Model 3 provides independent mixers for this purpose. More on them in the HOOK-UP Sections.

Lastly, you'll need to mix all the signals which will be recorded. Basically, this is done by using the CHANNEL ASSIGN buttons. More on this later too.

Notes on connection: Just a quick reminder to check impedances. When they match (there are tolerances, the numbers don't have to be exactly the same), you have a good connection. There may be some cases where you'll need accessories like transformers to avoid an impedance mis-match.

Another important factor in connecting your system together is the concept of gain. Try to make sure that 0 VU represents a relatively loud sound pressure level from your monitors. Note that this is highly subjective. The point is to avoid a gross mis-match between the relative reference within the signal processing stages and the relative reference at the final monitoring stage. If your tapes turn out unbearably hissy, for example, chances are your monitoring levels are way out of proportion to your print levels, to the extent that to get anything near saturation of tape would blow out your loudspeakers. So during calibration, keep the levels as close as possible.

Part 1. Using the Model 3 with a 4-track tape recorder.

(A) The Original Recording.

Basic hook-up: First, calibrate the equipment. Connect your 4-track recorder to the Model 3 as shown in Fig. 1. Now calibrate your recorder in the normal way so that 0 VU playback corresponds to 0 VU record. A test tape or tone generator (like the TEAC TO-122) is most useful here. To get a relative balance between the level controls of the tape recorder and the Model 3, plug a tone generator into the MIC IN jack on channel 7 of the mixer (generators like the TO-122 usually go into high impedance inputs) or the LINE IN jack on any channel. Now assign all 4 output busses which, in turn, feed the line inputs of your recorder. Record about a minute of the tone (nominal 1 kHz) switching from source to tape on the recorder, and making the necessary adjustments such that the grey areas on the Model 3 faders represent approximately 0 VU. Now adjust the record level controls on the recorder to 0 VU. Note that this calibration is not hypercritical. You'll be making level changes on the Model 3 during recording.

Connect your mics (or lines) to the appropriate MIC IN or LINE IN jacks on each input section (Fig. 2). Use the CHANNEL ASSIGN buttons to send the signals to whichever output buss (or busses) you choose. And remember, when more than one buss is assigned, PAN is automatically engaged.

Monitoring. Connect the 4-track recorder's OUTPUTS to the MON IN jacks on the Model 3. The MON OUT

FIG. 1—HOOK-UP FOR CALIBRATION

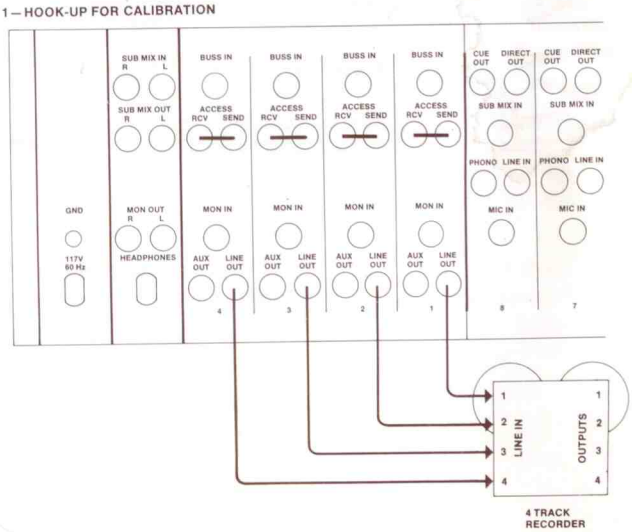

FIG. 2

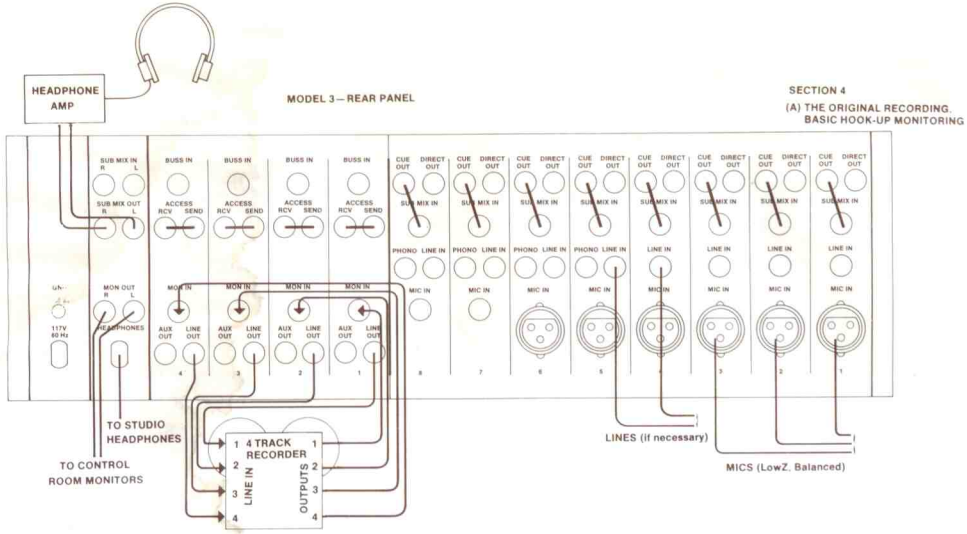

R & L jacks then feed the control room monitors—a pair of loudspeakers driven by an external power amplifier. This is your first stereo mix. Use the select buttons on the MONITOR SELECT section to send the signals to right, left, or both control room monitors. You have an independent level control for this circuit. Switch the tape/source switch on your recorder to get the desired monitoring status on each of the recorder's tracks; that is, switch to output (TAPE) to monitor the recorded signal and input (SOURCE) to monitor the live signal.

If you connect the CUE OUT jacks to the SUBMIX IN jacks, you can get an independent cue mix for the musicians. Here, all the input signals are sent to the 8 x 2 SUBMIXER which provides you with individual pan and gain (level) controls for each input.

Feed the cue mix to the musicians via the rear panel HEADPHONES. And make sure the front panel HEADPHONE SELECT switch is in the correct position (SUBMIX in this case). You have an overall headphone level control just above the HEADPHONE SELECT switch which can raise or lower the level of the headphone signal. And the individual controls of the SUBMIXER allow you to bring up or down any one signal to the desired level for the musicians. NOTE: If you need more than 1 Watt to drive your studio headphones you can use the SUBMIX OUT R & L jacks and an external power amplifier. Just make sure the nominal levels and impedances match.

(B) Overdubbing. Here are a few examples which will help you understand how recording and monitoring take place during an overdub session. You might note that between the original recording and the overdub sessions, there will be some repatching (sometimes this can be avoided, as you'll see in the examples). Remember, too, that these examples are just guides, not rules. Refer to the signal flow and hook-up diagrams and you'll get to know the Model 3 very quickly.

EXAMPLE 1. This hook-up will give you an independent cue mix when mixing previously recorded material with live material.

(See Fig. 3) Connect the CUE OUT jacks to the SUBMIX IN jacks on each input, which sends the unaltered signal of a particular input to the 8 x 2 SUBMIXER. Now connect your 4-track recorder's OUTPUTS to the 4 MON IN jacks on the Model 3. These signals go to the 4 x 2 monitor mixer and are presented at the MON OUT R & L jacks. Make a patch between MON OUT R & L and SUBMIX IN R & L. This patch brings the signals from the tape recorder, via the monitor mixer, into the SUBMIXER, so they are ready to be mixed with the live music. The signals at the SUBMIX OUT R & L jacks are the final stereo mix, which can be fed to the musicians via the HEADPHONES. You can see that there are several monitoring possibilities.

Now take a look at some of the level controls. The MONITOR (4 x 2 mixer) control determines the level sent to the SUBMIXER (these signals are coming from your tape recorder). And the SUBMASTER (on the SUBMIX section) controls the overall output level of the SUBMIXER. The headphone select level control determines the level sent out the HEADPHONES. With this hook-up you'll have to repatch for mixdown.

EXAMPLE 2. (see Fig. 4) If you will be using 4 mics or less for overdubs, this hook-up eliminates the need to

FIG. 3

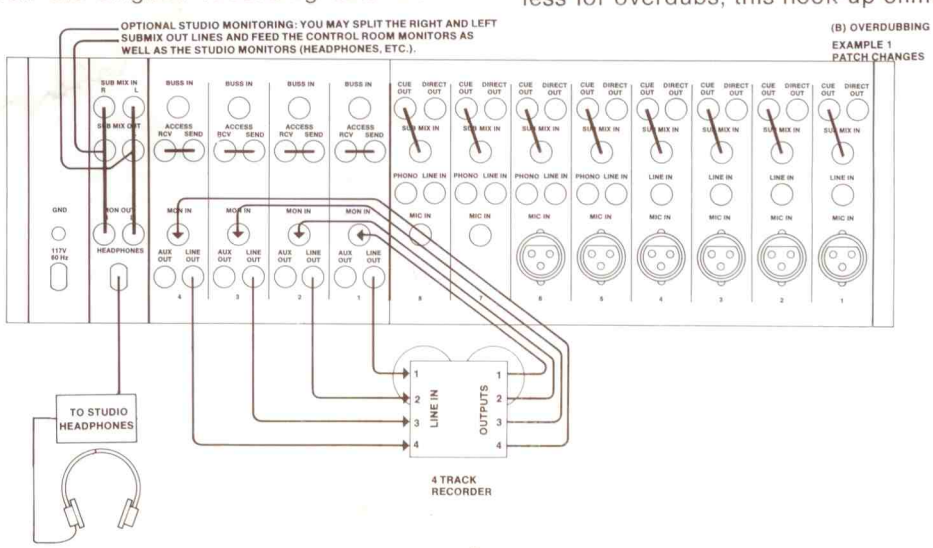

FIG. 4

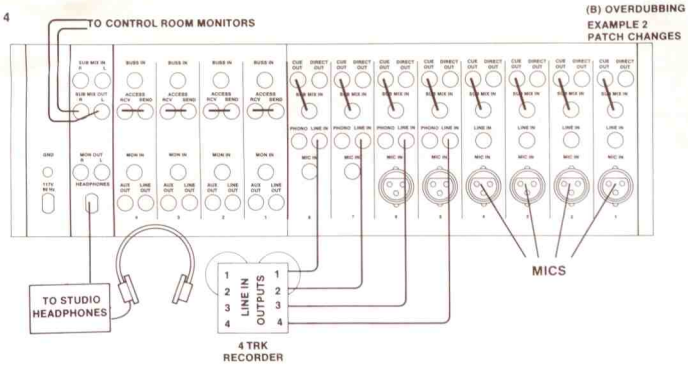

repatch for mixdown. Connect all the CUE OUT jacks to their respective SUBMIX IN jacks. Now connect your recorder's OUTPUTS to 4 LINE IN jacks on the Model 3—making sure they are not in channels where mics are connected, and that the front panel INPUT SELECT switches are in the LINE position. Where there is a LINE INPUT connected, that input section's CHANNEL ASSIGN buttons should be in the UP position, thus preventing those signals from appearing on the program buss (output). The SUBMIX OUT R & L can feed the control room monitors, and the HEADPHONES provides a cue mix for the musicians. Also, you have individual pan and level controls for each input (for example, 1 thru 4—tape, and 5 thru 8—live). The musicians hear what you hear in the control room, and for now, the 4 x 2 monitor mixer is not used.

EXAMPLE 3. This final example shows you a way to eliminate much of the repatching for mixdown, and get separate cue and monitor mixes. We'll also take some time to explain each hook-up, to show you where the signals go and what happens to them so you might want to use this example as your recording model.

An important fact—in this example there is a restriction on the number of mics you may use during a given overdub session. During the original recording session you have all 8 mic inputs available. Now suppose you have already recorded 2 tracks. These must be monitored by you (in the control room) and the musicians (in the studio). Therefore, 2 input channels on the Model 3 will supply the tape cue (for cue mix these signals must be sent to the SUBMIXER). Now you have 6 mic inputs (or line inputs) available for live recording. The rule is that each track that you are monitoring from the tape recorder, consumes one input channel on the mixer. Thus, if you have 3 recorded tracks to be monitored, you have 5 mic inputs available, and so on.

Remember: An electric guitar may be plugged directly into a high impedance mic input on the Model 3, thus eliminating the hum from a guitar amplifier.

For this example (see Fig. 5), suppose you have already recorded 2 tracks. Now you'll want to monitor these two tracks and record another single track in sync with the first two. This track will be recorded with two mics (assume the use of low impedance, balanced mics).

The tape/source switch on the recorder is in the TAPE position on tracks 1 and 2 (already recorded), and in the SOURCE position on track 3 (live music). Tracks 1 and 2 should be put into the SYNC mode.

To record—connect the first mic to input 5 and the second mic to input 6. You might want to experiment with the equalizers to get the sound character you want.

Before getting into monitoring, look at the basic recording hook-up. Patch each CUE OUT to its respective SUBMIX IN. Connect the recorder's 4 OUTPUTS to LINE IN 1 thru 4 respectively. Connect LINE OUT 1 thru 4 on the Model 3 to the recorder's inputs 1 thru 4 respectively. And make a patch between AUX OUT and MON IN on the Model 3.

The HEADPHONES on the rear panel may be used to feed the musician's headphones (HEADPHONE SELECT switch in the SUBMIX position). The MON OUT R & L jacks feed the control room monitors. You can check exactly what the musician is hearing by plugging a pair of stereo headphones into the front panel HEADPHONES.

You are now hooked-up for overdubbing. Let's see where all of these signals are going. On input sections 5 and 6, depress CHANNEL ASSIGN 3. Now the signals are presented at buss 3 and recorded on track 3 of the recorder. These signals are also sent to the monitor mixer via the AUX OUT to MON IN patch for your control room mix.

Assign inputs 1 and 2 to buss 1 and 2 respectively. These signals are sent to the recorder's inputs 1 and 2 via the LINE OUT jacks 1 and 2 on the Model 3. But they're not recorded because tracks 1 and 2 on the recorder are in the SYNC mode. The signals will, however, be fed to the monitor mixer.

You should remember that the control room is fed via the MON OUT R & L jacks. The signals presented here are coming from the 4 x 2 mixer which is, in turn, being fed by the signals assigned to each buss (remember the AUX OUT to MON IN patch). What you have here is a stereo mix of the two previously recorded tracks and the new live music going on track 3. You have level control for this mix and you can route each signal to the right, left or both monitors.

The musician's mix is coming from the SUBMIXER via the rear panel HEADPHONES. This is a stereo mix that gives you individual pan and level (gain) controls for each input channel (or track). In this example, the

FIG. 5

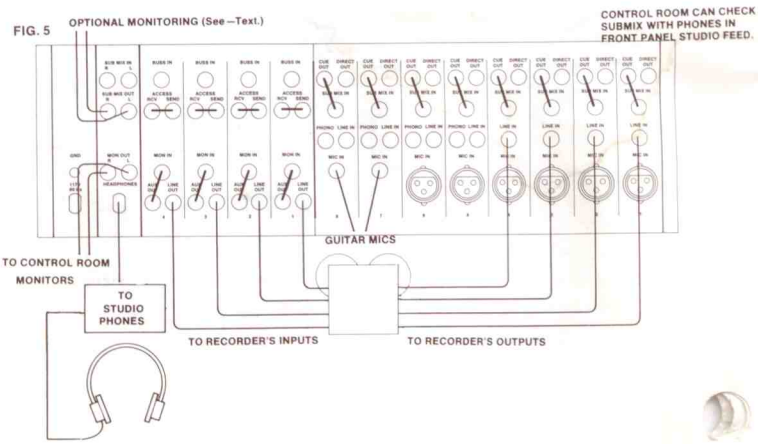

choices are relatively simple. But suppose for a moment you had 3 tracks — drums, piano and bass guitar— and you wanted to add a lead guitar. This is not a typical arrangement (drums are usually recorded on several tracks), but it will do to illustrate the fact that you can bring any one instrument into prominence for the lead guitarist. He might want to hear more bass than piano, etc. The point is that you have two independent mixers (SUBMIXER and monitor mixer) because you will most likely want to hear something differently than the musician. The musician will want to hear how his part fits into the song musically; he wants to play off the recorded music for aesthetic reasons. You, as engineer, will want to hear the overdub part to make sure it sounds right for the tape; you will be more interested in signal quality. For you, the overdubbed part might be considerably louder. For the musician, a previously recorded part might be louder.

To take this example one step further, suppose you have already recorded 3 tracks and you want to add a fourth. Again, you'll be using two mics for this last track, so a few changes will need to be made. Set the tape/source switch on your recorder to TAPE on track 3 and place track 3 into the SYNC mode. Assign input 3 to buss 3. Track 4 remains in the SOURCE position. Assign inputs 5 and 6 to buss 4. Now you're ready to go. NOTE: Make sure that the tracks on which you are recording are in the TAPE mode. If they are in the SOURCE mode, there is a chance you'll get feedback.

(C) Mixdown. The object of the mixdown is to generate the tune. Like film editing, it's a highly subjective and critically important part of the total process. Many people claim it's the most important part.

If you think of a musical chord containing three different notes, obviously each note is identifiable by itself, but the combination in the form of a chord is a wholly different musical perception. Further, altering any one of the component notes, alters the combination as a whole.

Replace those individual notes with musical instruments that can be individually altered and blended into a new whole, and you have the reason multitrack recording gear exists. The original sound can be changed by blending it with other sounds. This combining of sounds produces a collective result that is subjectively different from the individual component sounds. Expressing your personal musical perceptions in this most tangible manner is an enormously satisfying experience.

Let's continue with the tape from Example 3. The first step in mixdown is to calibrate the equipment again. This time you'll be calibrating a 2-track recorder. Set up the recorder as before, trying to establish a relative balance between playback and record levels, and then calibrate it with the Model 3 to achieve a comfortable balance so that 0 VU corresponds approximately to the shaded area on the fader scales. Now set the recorders meters so that 0 VU corresponds to 0 VU on the Model 3.

You can see from Fig. 6 that we've added some extra equipment. We've done this to illustrate how this external gear can be interfaced with the rest of the system.

FIG. 6

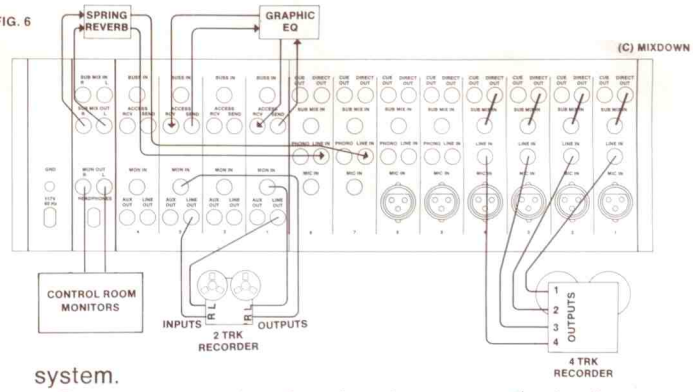

Before you assign the signals to a particular buss, note where the external equipment is hooked-up. The graphic equalizer is patched to ACCESSORY SEND and RECEIVE on busses 1 and 3, and it's always engaged. You may equalize the combined signals assigned to these busses.

The spring reverb is fed via the SUBMIX OUT R & L jacks. Since the DIRECT OUT jacks are connected to the SUBMIX IN jacks on inputs 1 thru 4, depress *D* channel assign to choose which tracks you want sent to the reverb unit (via the SUBMIXER). In so doing, the gain controls on the SUBMIXER — post EQ and fader— function as echo send level controls.

Bring the signals from the reverb unit back into the mixer via the LINE IN jacks on inputs 7 and 8. Depress channel assign buttons 1 and 3, and use pan to place the reverberated signals wherever you want. The faders on input channels 7 and 8 are your echo receive level controls in this example.

The 4-track recorder continues to feed inputs 1 thru 4 on the Model 3. The stereo mixdown recorder is patched in the following way: connect its outputs to MON IN 1 and 3 — you might want to designate 1 for left and 3 for right. LINE OUT 1 and 3 feed the recorder's inputs — again, designate 1 for left and 3 for right. Thus, MON OUT R & L feed the control room monitors. The stereo recorder can now be switched from tape to source to monitor either input or tape.

Now you can assign the 4 tracks to both output busses, and use PAN for stereo placement.

NOTE: When you check each input individually, don't be in a hurry to re-record something that doesn't sound quite right. For example, suppose you had recorded an electric guitar and you had mixed the amp. You might find that when you listen to this track by itself there is some hum present. Before rushing off to re-record, listen to that track in combination with the other tracks. Sometimes, the hum will be masked and you won't need to record that part again.

If you're open to experimentation and prepared to put in some time, it's hard to go wrong. One nice aspect of the mixdown process is that you don't have the kind of pressure that you have during the recording session. If sheer magic is happening in front of that microphone, you'd better get a good recording — because it might not happen again. During re-mix, the tracks are in the can. If you reach for one fader and accidentally pull another, just rewind the tape.

While it's certainly true that mixing can be called an art in its own right, don't make the mistake of thinking of it as a panacea, a cure-all. All the signal processing gear in the world can only serve the art. Not fabricate it. No amount of money invested in whiz-bang electronics will ever fully compensate for, or indeed replace musical chops. Get the music together first. Then record it. A bad recording of great music, however unfortunate and disappointing it may be, is still a lot more palatable than a great recording of bad music.

Part 2. Using the Model 3 with an 8-track tape recorder.

FIG. 7

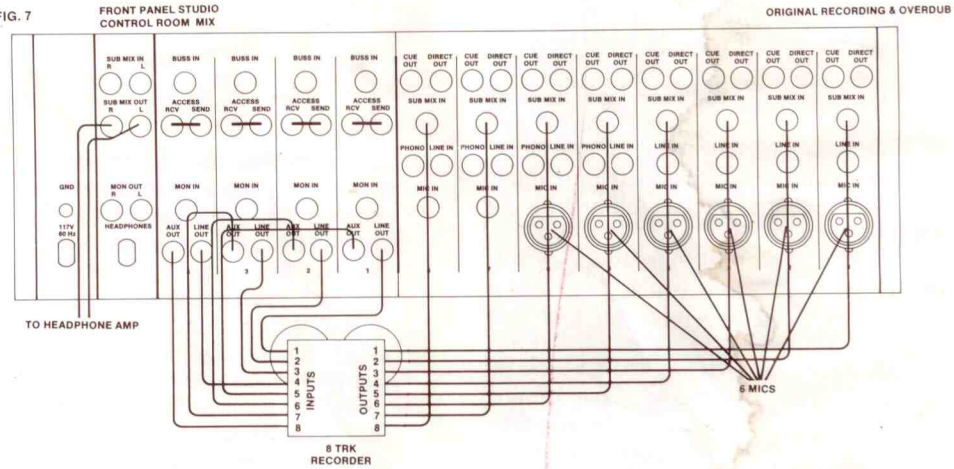

By now you should have a pretty good idea of how the Model 3 works in a recording situation. Apply what you've learned about signal flow and you won't have any trouble understanding 8-track interface.

A point to remember is that, while the Model 3 can handle up to 8 inputs, it appears to have only 4 outputs; that is, 4 discrete outputs and 4 more in parallel. In Example 2 we'll show you how the Model 3 provides 8-out capabilities.

These hook-ups are just suggestions. Try them and build on them. You'll soon find many other hook-ups that suit your own recording applications.

EXAMPLE 1. (see Fig. 7) In this example, we'll show you a way to avoid repatching for overdubbing. The presumption is that you will *not* be recording on more than 4 tracks at any one time. Here, you sacrifice having independent cue and monitor mixes. You'll hear the same thing in the control room as the musicians hear in the studio.

For the original recording, we'll be using 6 mics. Connect them to inputs 1 thru 6 (low Z, balanced) on the Model 3. Connect LINE OUT 1 thru 4 to the recorder's inputs 1 thru 4. Now connect AUX OUT 1 thru 4 to the recorder's inputs 5 thru 8.

NOTE: When patching unbalanced cables in this manner, keep the cable lengths under 10 feet.

It might be a good idea to label the front panel with masking tape so you remember where you've made your patches. To drive several sets of headphones, use the SUBMIX OUT R & L jacks. Connecting these lines to an external amplifier will provide the cue mix for the musicians. The control room mix will be provided by the front panel studio feed.

Now you're ready to record the first four tracks (remember to calibrate the equipment). Assign the 6 mics to the buss or busses you choose. The recorder should be set to SOURCE. During the recording you will want to switch tracks 1 thru 4 to TAPE as a check. Tracks 5 thru 8 are *not* in the record mode.

For overdubbing you don't need to repatch. Just enter record on tracks 5 thru 8 and enter PLAY (SYNC) on tracks 1 thru 4. You just repeat the entire process. Again, the SUBMIXER provides all monitor mixes—cue and control room.

EXAMPLE 2. (see Fig. 8) In this example we will be recording *more* than 4 tracks at one time. Connect the recorder's outputs to the SUBMIX IN jacks—try to keep the numbers the same, output 1 to SUBMIX IN 1, etc. Feed the recorder's inputs 1 thru 4 via the LINE OUT jacks. Any additional tracks will be fed by the DIRECT OUT jacks on live inputs that are to be recorded.

The SUBMIXER provides both cue and monitor mixes. You can use the SUBMIX OUT R & L jacks to feed a headphone amplifier and drive several sets of headphones for the musicians. In the control room, use the HEADPHONES .

FIG. 8

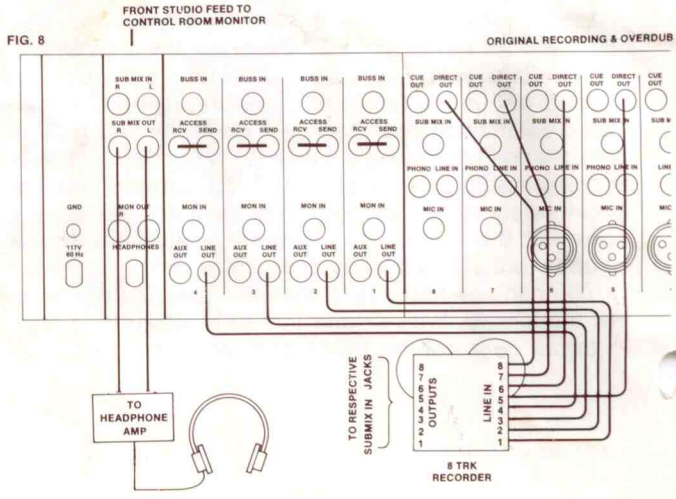

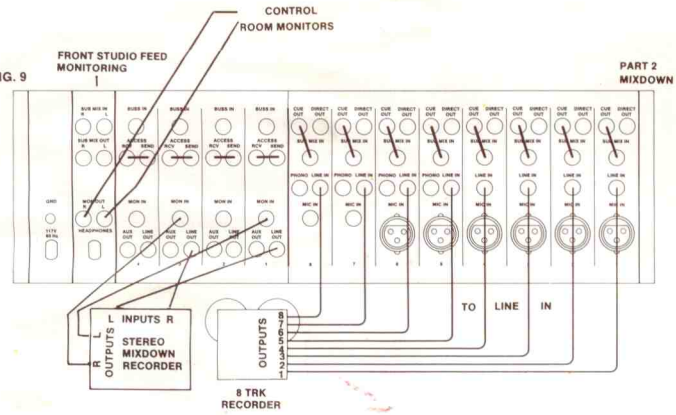

FIG. 9

To record, make sure you depress the correct CHANNEL ASSIGN button on each input.

There is no need to repatch for overdubbing if you have not used all 8 inputs for the original recording. Just switch the recorder to PLAY on those tracks which have already been used (SYNC mode), and switch to RECORD for the new tracks. Follow the same procedure outlined in Example 1.

If you have used all 8 inputs for the original recording, you will have to mix some of the tracks down in order to open an input channel.

Mixdown. (see Fig. 9) For the mixdown example, assume you have recorded on all 8 tracks. This is a simple hook-up. Connect the 8-track recorder's outputs to the LINE IN jacks on each input section respectively. Feed the stereo mixdown recorder's inputs from LINE OUT 1 and 3. And patch the stereo recorder's outputs to MON IN on these same busses.

By feeding the mixdown recorder from busses 1 and 3, you give yourself the option of using PAN when both busses are assigned (usual procedure is to assign both busses and then use pan).

The MON OUT R & L jacks feed the control room monitors. This is the final stereo mix.

The 8-track recorder is switched to PLAY and it is set for TAPE monitoring. The stereo mixdown recorder is in RECORD and placed into SOURCE monitoring. You will want to switch to TAPE periodically as a check.

Section 5. The Model 3 goes PA!

Using your Model 3 for PA is not a difficult task. The design, versatility and portability of the Model 3 make it an excellent PA mixer.

We've put together a basic system for setting up the Model 3 for PA. It is by no means meant to tie you to a set way or procedure, but rather to spur your imagination and creativity.

Again, in the following examples, we will emphasize the concept of signal flow so you can tailor the Model 3 to your specific needs.

The days of the simple PA are gone. No longer will it suffice to have many mics mixed together and sent over a single house amplifier. Now, there are needs for stage mixes (often more than one), stereo house mixes, tape recording mixes, broadcast mixes, and engineer's mixes. There will be a time when you might want a mix sent to a tape echo or reverberation chamber. In other words, many different submixes are now necessary. The Model 3 provides these submix capabilities.

As described in earlier sections, the Model 3 actually consists of various mixers: the normal program mix (8-in/4-out), a monitor mixer that can mix the four program busses into a separate stereo mix (4 x 2), and an independent 8 x 2 submixer. These are the mixes available to you. You can send them to various amplifiers or patch them back into various inputs on the Model 3.

There are numerous inputs besides the mic and line inputs on each input section. There are 4 buss inputs 4 monitor inputs, 8 submix inputs and two submix buss inputs. You might want to review the various inputs and outputs, before continuing with an example of a typical PA set-up.

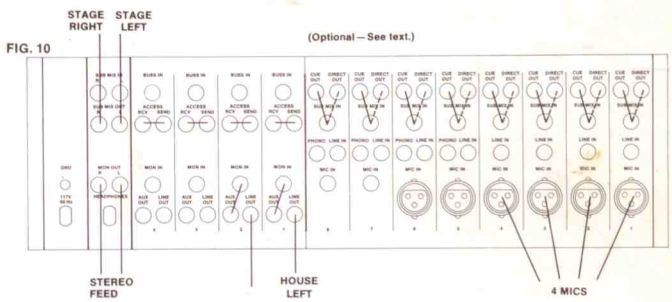

FIG. 10

EXAMPLE 1 (see Fig. 10)

1. Connect your mics to the MIC IN jacks on the input sections you need. Assign them to both output busses 1 and 2 for your house mix, and determine the stereo image with the PAN control on each input.
2. Connect the house amplifiers to LINE OUT 1 and 2. driving the House Speakers.
3. Patch CUE OUT to SUBMIX IN on each input section. You now have a stereo stage mix controlled by the SUBMIXER.
4. Connect SUBMIX OUT R & L to the amp which is driving the stage monitors.
5. If equalization is needed for the stage mix, then patch from DIRECT OUT to SUBMIX IN. But remember, DIRECT OUT is post EQ and fader. (The level and EQ that you set on the various inputs will affect the stage mix in this case.)
6. A third mix can be derived from the monitor mixer when patches are made between AUX OUT 1 and 2 and MON IN 1 and 2. You will not be able to create a completely new mix, because the stereo image

has already been determined on busses 1 and 2 (AUX OUT is in parallel with LINE OUT), but you will have an overall level control for this new monitor mix.

7. On the MONITOR SELECT buttons, depress 1 on the left, and 2 on the right. Push both left and right buttons on 1 and 2 if you need a mono feed.
8. Connect the MON OUT R & L jacks to wherever you want this new mix to go. For example: a stereo tape deck, broadcast, or perhaps a third stage mix. The overall level will be determined by the MONITOR level control.
9. You will probably want to check the various mixes (generally through stereo headphones). This can be done through the headphone monitor circuit. Plug a set of headphones into the HEADPHONES and select either MONITOR or SUBMIX on the HEADPHONE SELECT switch.

EXAMPLE 2. Suppose you want to mix *and* record a live concert. And you have a 4-track tape recorder. You must supply a stereo house mix, a stereo or mono stage mix, and still feed the 4-track machine.

Here's one suggestion. You have your mics connected to the mic inputs on your Model 3. Now connect the DIRECT OUT jacks to the SUBMIX IN jacks on each input. This will become your stereo house mix. Connect the 4 LINE OUT jacks on the Model 3 to the 4 inputs on your 4-track recorder. Now connect the AUX OUT and MON IN jacks on the Model 3. MON OUT R & L is the stereo stage mix. SUBMIX OUT R & L is the stereo house mix. The 4-track machine is fed from the LINE OUT jacks.

There are many different approaches to connecting the Model 3 for PA applications. These are only suggestions. You have to decide what mixes you want, where you want them to go, and how many you need.

FIG. 11

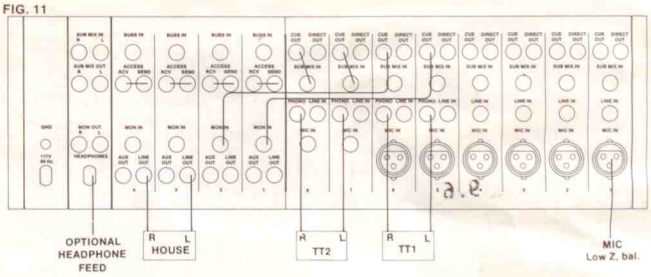

Be creative and you'll find that much can be done with the Model 3.

If you run into any problems, or find interesting solutions, let us know. We're always happy to hear from you.

Section 6. Disco!

The Model 3 is an excellent disco mixer and, with a little extra patching, offers many of the features found on expensive broadcast mixers. The hook-up suggestions below will show you how the Model 3 fits into a typical disco application. It's just a start, and you'll soon discover new and different possibilities.

The order in which the suggestions are presented is for ease of explanation—when you're on the job, do whatever's easiest for you. HINT: When you are mixing for disco, take along some masking tape or a label maker. Re-label (see Fig. 12) the controls as you patch, and your evening's work should go smoothly.

FIG. 12—MODEL 3 SET UP FOR DISCO.
(X's note where buttons are depressed; lines note position of switches and knobs.)

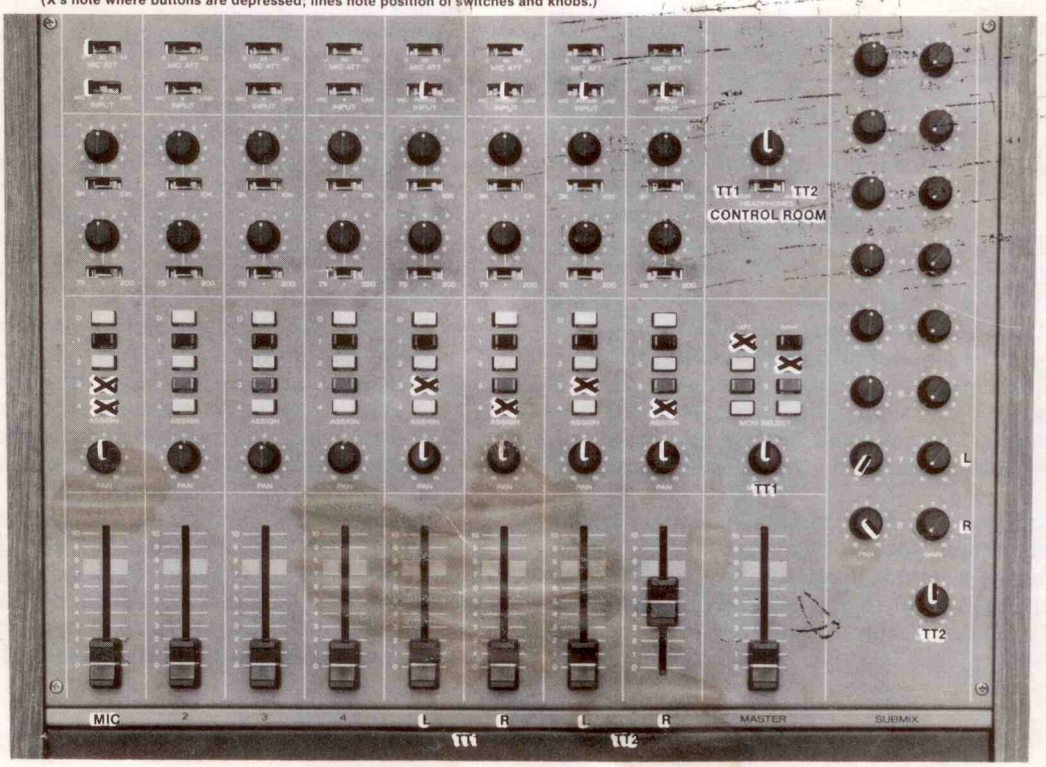

Hook-up example. In this example, we'll be using two turntables (TT1 and TT2) and a mic. Refer to Figs. 11 and 12 to see what changes in nomenclature we have made.

The first hook-up is the stereo output. Drive the left and right sides from LINE OUT 3 (left) and 4 (right). LINE OUT 1 and 2 are not used in this example.

Connect TT1 to the PHONO input on input 5 for the left channel and 6 for the right channel. Connect TT2 to the PHONO input on input section 7 for left and 8 for right. Connect the mic to MIC IN 1 (low Z, balanced). Now check your INPUT SELECT switches on the front panel to make sure they are in the correct positions—corresponding to the particular input source.

Now the Model 3 is set up to handle both turntables and a mic. On section 5, depress CHANNEL ASSIGN 3. This sends the left signal of TT1 to the left output (3). On section 6, depress CHANNEL ASSIGN 4. This sends the right signal to TT1 to the right output (4). The same holds for TT2: depress CHANNEL ASSIGN 3 on section 7, and 4 on 8. Now you have both turntables assigned to the outputs. The house level is controlled by the faders on sections 5 thru 8. (NOTE: In some disco rooms, the speakers are so far apart, the apparent stereo effect is lost. It may sound as if the speakers are pulling the sound apart. For additional control while using this same hook-up, depress CHANNEL ASSIGN 3 *and* 4 on sections 5 thru 8. Now the PAN control is engaged, and you can place the stereo image accordingly. Begin with the PAN controls set all the way to the left on sections 5 and 7; all the way right on 6 and 8. Move them towards the center to bring the sound "closer together.")

On section 1, where the mic is connected, depress CHANNEL ASSIGN buttons 3 and 4 together. This will turn the mic on. When they are UP, the mic is off. The PAN should be set in the middle.

Another way to get more control over the mic is to depress CHANNEL ASSIGN buttons 1, 3 and 4. Thus PAN is engaged again. When the PAN control is moved to the far left, the lower numbered outputs are assigned: to the right, the higher numbered outputs. So when PAN is moved to the left, the signal is sent to output 1. Since there is no connection at output 1, the mic is effectively off. By rotating the PAN control clockwise (to the right), the mic can be made to fade in—to the left it will fade out. When faded in, the mic will reach the level preset on the fader.

Monitoring. This suggested hook-up will give you independent control over TT1 and TT2 in the booth. Control TT1 with the monitor mixer (4 x 2), and TT2 with the SUBMIXER (8 x 2). Connect CUE OUT on section 5 to MON IN 1. This is your left channel patch. Connect CUE OUT to MON IN 2. This is your right channel patch. On the front panel, depress MONITOR SELECT buttons 1 on the left and 2 on the right. The level control determines the level for TT1 in your booth.

For TT2, connect CUE OUT on section 7 and 8 to SUBMIX IN 7 and 8. Here, you have individual level and pan controls for TT2. The SUBMASTER control determines the level for TT2 in the booth. Let's assume you monitor through a set of stereo headphones—plug them into the front panel HEADPHONES. Remember, if you need more than 100 m Watts, the rear HEADPHONES supplies 1 Watt. Now, the HEADPHONE SELECT switch determines which turntable you'll be hearing through the headphones. And it provides an overall level control for the booth. The mic is not monitored.

Remember, you still have full use of the built-in equalizers if you wish to change the character of the sound in the house. You won't hear changes through your headphones (or monitors) because you are feeding the monitoring system by the CUE OUT jacks which are pre EQ and fader.

Now you're ready to go!

On the job

We're going to run through some of the basics for working the Model 3 after you've hooked it up. This will be a brief description of a typical disco operation. Again, these suggestions are not rules. Get to know the Model 3, and you'll decide what's best for you:

First, we'll set the levels for the booth. Switch the HEADPHONE SELECT switch to TT1 (monitor). Set its level with the monitor level control to about 5. This gives you some flexibility if you need it. Then switch to TT2. Set all the gain controls on the SUBMIXER to maximum. Now, with the SUBMASTER control, set the level of TT2 so it is approximately the same as TT1. It should be near 5 on the dial, but don't worry if it's not exact. These levels will depend on what level you consider listenable, and how efficient your loudspeakers i.e.

The pan controls on the SUBMIXER should be in the following positions: 7—all the way counterclockwise; 8—all the way clockwise. You can adjust them the way you want, obviously.

Now, set the house levels. You'll be using the Model 3's VU meters. And you should have a power amplifier with level controls on it. Here, you'll want some sort of reference in the booth, so run a record and set the VU meters so that the needle stays around the 0 position (using the faders on sections 5 and 6, then 7 and 8). Then set the house level with the control on the power amp. Set it for the desired loudness and add any equalization you need.

Set the mic level the same way, but it should not be quite as loud as the music. Once set, make a mark on the fader scale, and try not to touch the fader again. You'll be using the PAN and/or CHANNEL ASSIGN buttons for control.

Now you're set up. Turn the PAN control on section 1 to the right and make your announcements. Then, with TT1 switched-in and cued, fade the mic out and bring the faders on sections 5 and 6 up until the VU meters read 0. Play that song. While it's playing, switch to TT2 in the booth and cue up the next song. If there is no announcement, crossfade to TT2. Do this by bringing faders 5 and 6 down while you bring faders 7 and 8 up to 0 VU. This will take some practice. Smooth transitions (crossfades) are a very important part of being a successful disco mixer.

If there is an announcement between songs, either switch the mic in or crossfade it in, and proceed as above.

Block diagram

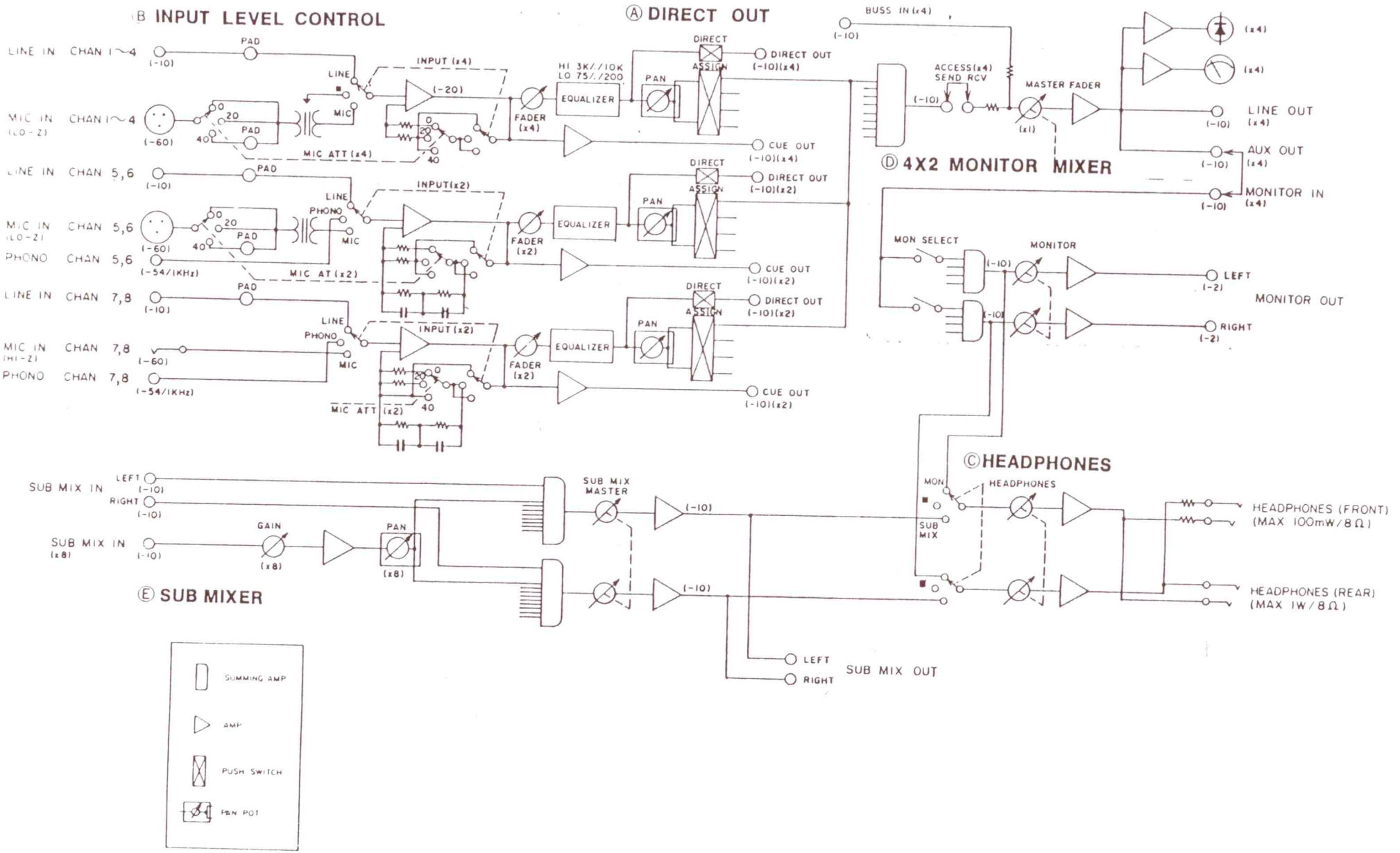

TEAC Tascam Series 3 Specifications

1. 8 input/4 output	
2. Input selector	Chan 1-4...MIC (LOW Z)/OFF/LINE Chan 5-6...MIC (LOW Z)/PHONO/LINE Chan 7-8...MIC (HIGH Z)/PHONO/LINE
3. Mic input	
1) Mic impedance	Hi-Z: 10K ohms Lo-Z: 200 ohms
2) Input impedance	Hi-z: greater than 100K ohms Lo-Z: greater than 1K ohms
3) Nominal input level	−50dB (3 mV)
4) Minimum input level	−66dB (0.5 mV)
5) Maximum input level	+10dB (3V) w/40dB attenuator
4. Phono input	
1) Input impedance	Greater than 45K ohms
2) Nominal input level	−54dB (at 1KHz)
3) Minimum input level	−60dB (at 1KHz)
5. Line input	
1) Line impedance	Greater than 20K ohms
2) Nominal input level	−10dB (0.3V)
3) Minimum input level	−16dB
4) Maximum input level	+24dB (15V)
6. Line output/Aux. output	
1) Load impedance	Greater than 10K ohms
2) Nominal output level	−10dB (0.3V)
3) Maximum output level	+14dB (5V)
7. Monitor output	
1) Load impedance	Greater than 10K ohms
2) Nominal output level	−2dB (0.78V)
3) Maximum output level	+16dB (6.3V)
8. Headphones	
1) Load impedance	8 ohms
2) Maximum output level	1W (rear panel), 100mW (front panel)
9. Frequency response	30Hz − 20KHz, ±2dB
10. Signal to noise ratio, overall	(measured at nominal input levels)
1) One mic input	Hi-Z: greater than 65dB WTD, 60dB UNWTD Lo-Z: greater than 75dB WTD, 70dB UNWTD
2) 8 mic inputs	Greater than 60dB WTD, 55dB UNWTD
3) One line input	Greater than 75dB WTD, 70dB UNWTD
4) 8 line inputs	Greater than 73dB WTD, 68dB UNWTD
5) One phono input	Greater than 65dB WTD, 55dB UNWTD
11. Equalization	Peak and dip type, ±15dB continuously variable. Hi-band − 3KHz-10KHz, switchable Lo-band − 75Hz-200Hz, switchable
12. Crosstalk	Greater than 60dB (at 1KHz)
13. Distortion, overall (Mic input to output)	0.3% THD maximum
14. Fader attenuation	Greater than 60dB
15. Send and receive data	
1) Accessory send level	Nominal −10dB (0.3V) into 10K ohms or higher
2) Accessory receive level	Nominal −10dB (0.3V) into 10K ohms or higher
16. Buss input, sub-mix buss input	
1) Input impedance	Greater than 10K ohms
2) Nominal level	−2dB (0.78V)
17. Monitor input	
1) Input impedance	Greater than 10K ohms
2) Nominal level	−2dB (0.78V)
18. Sub-mix input	
1) input impedance	Greater than 10K ohms
2) Nominal level	−10dB (0.3V)
19. Cue output	
1) Load impedance	Greater than 10K ohms
2) Nominal level	−10dB (0.3V)
20. Direct output	
1) Load impedance	Greater than 10K ohms
2) Nominal level	−10dB (0.3V)
21. Power requirements	117V (200V, 220V−240V, 250V.) AC, 50/60Hz, 40W

A final note.

Now you can get to work and use your Model 3 for recording, PA, or disco mixing. It was designed to be versatile yet uncomplicated. With a little experience, you'll find an almost unlimited variety of applications for it.

We can't emphasize the concept of signal flow enough. Learn it, and the Model 3 will open new doors. But please don't get the idea that you have to immerse yourself in a three week crash reading program before you plug your Model 3 in. That's not true. You don't have to be an engineer to work the controls.

The best teacher will be your own experience. You'll probably find new and different ways to work and use your Model 3. So be creative. If you find interesting solutions or new applications, there's a group of people here at TEAC who are honestly interested in hearing from you. Let us know how you're doing. Hopefully, products like the Model 3 will help you do it better.