SOUNDCRAFT DELTA Δ8

USER GUIDE

Downloaded from www.Manualslib.com manuals search engine

CE This equipment complies with the EMC Directive 89/336/EEC

For further details contact:
Harman International Industries Ltd,
Cranborne House, Cranborne Road,
Potters Bar, Hertfordshire, EN6 3JN, U.K.

Tel: +44 (0) 1707 665000
Fax: +44 (0) 1707 660482

© Soundcraft Electronics Ltd. 1993
All rights reserved

Issue 4
Part No. ZZ2654

Information in this manual is subject to change without notice and does not represent a commitment on the part of the vendor. Soundcraft Electronics Ltd. shall not be liable for any loss or damage whatsoever arising from the use of information or any error contained in this manual.

No part of this manual may be reproduced, stored in a retrieval system, or transmitted, in any form or by any means, electronic, electrical, mechanical, optical, chemical, including photocopying and recording, for any purpose without the express written permission of Soundcraft Electronics Ltd.

It is recommended that all maintenance and service on the product should be carried out by Soundcraft Electronics Ltd. or its authorised agents. Soundcraft Electronics Ltd. cannot accept any liability whatsoever for any loss or damage caused by service, maintenance or repair by unauthorised personnel.

Soundcraft Electronics Ltd.
Cranborne House
Cranborne Industrial Estate
Cranborne Road
Potters Bar
Herts.
EN6 3JN
England

Tel: 0707 665000
Fax: 0707 660482

Downloaded from www.Manualslib.com manuals search engine

Contents

Introduction 1

Introduction to Delta 8 2

Precautions & Safety Instructions 3

Connections 4

Installation 7

Module Block Diagrams 13

D214 Mono Input Module 17

Operation 18

Specifications 21

D212 Stereo Input Module 23

Operation 24

Specifications 26

D206 Dual Line Input Module 27

Operation 28

Specifications 30

D224 Group Output Module 31

Operation 32

Specifications 34

D216 Master Module 35

Operation 36

Specifications 38

Downloaded from www.Manualslib.com manuals search engine

Contents (cont.)

Appendices 41

Specification Notes 42

Dimensions 43

Configurations 44

Warranty 45

Glossary 46

Downloaded from www.Manualslib.com manuals search engine

Introduction

Introduction to Delta 8

Precautions and Safety Instructions

Connections

Downloaded from www.Manualslib.com manuals search engine

Introduction to Delta 8

Delta 8 is a new 8 bus recording console from Soundcraft.

Designed for both 8 and 16 track recording, Delta 8 provides a compact, high performance package for home recording as well as broadcast and post production facilities.

The range is based on single piece steel frame for superb rigidity, combined with a comprehensive selection of modules with integral rear connectors. Delta 8 can be configured for a wide range of applications, with a choice of Mono, Stereo, or Dual Line input modules. All frames require a master module, and any Group modules fitted have to be positioned immediately to the right of this.

Should you wish to replace or add extra modules, please contact your authorised Soundcraft dealer, who can supply the modules and change the configuration without voiding the warranty.

The Comprehensive Master module incorporates two 2-track tape returns, and two control room monitor outputs for main and nearfield speakers.

Delta 8 can be fitted with up to 8 Group output modules, and each of these comprises two tape return monitors, providing monitoring for up to 16 tracks. The Monitor Returns can double as extra inputs during mixdown.

Equalisation is very comprehensive on the input modules, with a 4-band Sweep EQ on the Mono input, and 3-band Sweep EQ on the Stereo and Dual Line inputs. The Stereo Input includes a further innovation - a Stereo Width control, enabling the width of a stereo image to be continuously varied. This is a unique feature on a console of this type, and will find many applications in broadcast and post production.

An LED overbridge provides metering for each of the sixteen tape returns, plus a a pair of moving coil VU meters, with peak LEDs to meter the main mix L & R outputs. The individual group output signals are monitored by integral bargraph meters on the group modules.

Delta 8 is available in three frame sizes, comprising 20, 28 or 36 input channels.

Downloaded from www.Manualslib.com manuals search engine

Precautions and Safety Instructions

General Precautions

Avoid storing or using the mixing console in conditions of excessive heat or cold, or in positions where it is likely to be subject to vibration, dust or moisture. Do not use any liquids to clean the fascia of the unit: a soft dry brush is ideal. Use only water or ethyl alcohol to clean the trim and scribble strips. Other solvents may cause damage to paint or plastic parts.

Avoid using the console close to strong sources of electromagnetic radiation (e.g. video monitors, high power electric cabling): this may cause degradation of the audio quality due to induced voltages in connecting leads and chassis. For the same reason, always site the console power supply away from the unit .

Caution! **In all cases, refer servicing to qualified personnel.**

Handling and Transport

The console is supplied in a rugged cardboard box. If it is necessary to move it any distance after installation it is recommended that this packing is used to protect it. Be sure to disconnect all cabling before moving. If the console is to be regularly moved (e.g. for touring) we recommend that it is installed in a foam lined flight case. At all times avoid applying excessive force to any knobs, switches or connectors.

Power supplies & cables

Always make sure that the power supply has been set to the same source voltage as the mains supply.

Always use the power supply and power cable supplied with the mixer: the use of alternative supplies may cause damage and voids the warranty; the extension of power cables may result in malfunction of the mixing console.

Warning! **Always switch the power supply off before connecting or disconnecting the console power cable, removing or installing modules, and servicing. In the event of an electrical storm, or large mains voltage fluctuations, immediately switch off the PSU and unplug from the mains.**

Always ensure that that you use the correct size of power supply for the size of your console. A CPS450 or CPS450B unit is required for all frame sizes except the 36 input version, which must be powered by the CPS750 or CPS750B.

Downloaded from www.Manualslib.com manuals search engine

Connections

Wiring Conventions

The standard Delta 8 console uses two different types of audio connector, 3 pin XLR (top diagram) and ¼" three pole (A gauge or stereo) jacks. The latter are used in four different configurations, as shown below. The rear frame of the console has standard apertures fitted with blanking panels. Your Soundcraft dealer can supply a variety of mounting plates to fit these, with EDAC (ELCO) multiway connectors, together with looms to link them to the modules.

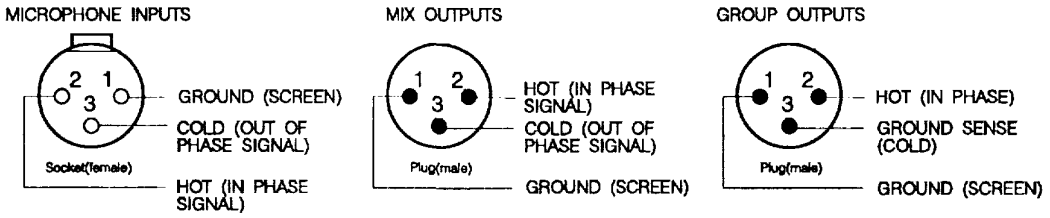

¼" 'A' Gauge Stereo Jack Plug used as balanced input: line inputs and tape returns

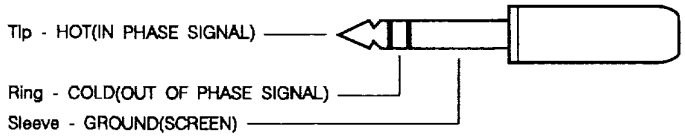

¼" 'A' Gauge Stereo Jack Plug used as ground compensated output: auxiliary send outputs and control room monitor outputs

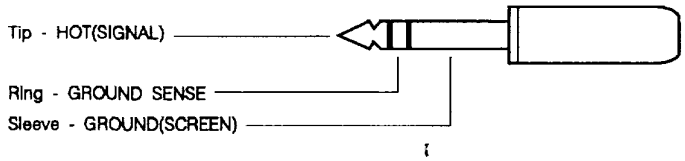

¼" 'A' Gauge Stereo Jack Plug used as unbalanced output: direct outputs

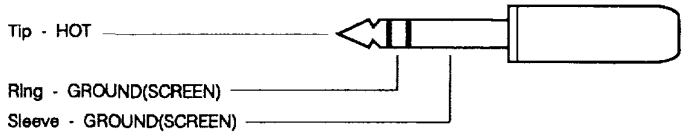

¼" 'A' Gauge Stereo Jack Plug used as insert send/return

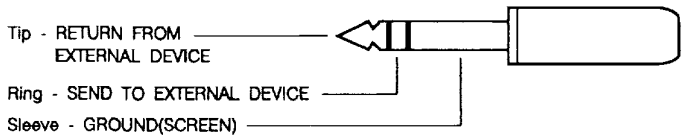

Downloaded from www.Manualslib.com manuals search engine

Signal Levels

It is important to supply the correct input levels to the console, otherwise signal-to-noise ratio or distortion performance may be degraded; and in extreme cases damage to the internal circuitry may result. Likewise, on all balanced inputs avoid sources with large common mode DC, AC or RF voltages, as these will reduce the available signal range on the inputs. Note that 0dBu = 0.775V RMS.

The microphone input is designed for use with balanced low impedance (150 or 200Ω) microphones.

Caution! **DO NOT use unbalanced microphones or battery powered condenser microphones with the +48V phantom power switched on: degraded performance or damage to the microphone may result.**

The sensitivity of the microphone input is variable from -2dBu to -70dBu (for +4dBu at the Stereo Mix outputs), and the maximum input level (balanced) is 20dB above the set sensitivity that is, with the gain control at minimum, the maximum input level is +18dBu. Although the microphone input can thus handle some line level signals, we don't recommend this, since the source may be unduly loaded by the low (2kΩ) input impedance, or be damaged by the +48V phantom power.

The line input has a sensitivity variable between -20dBu and +10dBu, and can also handle a maximum input level up to 20dB above the set value. Note that the maximum input level for unbalanced inputs is 6dB less than that for balanced signals, so very high level unbalanced signals (e.g. loudspeaker outputs of power amplifiers) may cause distortion. The input impedance is approximately 20kΩ, and thus high impedance sources (e.g. electric guitars) may be loaded too heavily. Such sources are best fed through an external DI (Direct Inject) box to the microphone input.

The main outputs of the console (e.g. Stereo mix, group outputs, aux sends) have a nominal output level of +4dBu, and an impedance of 75ohms. The Stereo mix and Group outputs also have the facility to switch the operating level to -10dBV to allow easy interface to domestic and semi professional equipment. These outputs will deliver full level (+21dBu unbalanced, +27dBu balanced) into loads of greater than 600Ω. Secondary outputs, such as channel insert sends and channel direct outputs (all unbalanced) have a nominal output level of -2dBu and a slightly higher output impedance of 200Ω, and will only deliver the full output level of +21dBu into load impedances of greater than 5kΩ.

Downloaded from www.Manualslib.com manuals search engine

Downloaded from www.Manualslib.com manuals search engine

Installation

Downloaded from www.Manualslib.com manuals search engine

Installation

Delta 8 is designed for reliability, high performance and built to the highest standards. Whilst great care has been taken to ensure that installations are made as trouble-free as possible, care taken at this stage, followed by correct setting up will be rewarded by a long life and reliable operation.

Warning! **Before switching on your Delta 8 console, check that the mains voltage selector on the power supply unit is set to the correct mains voltage for your area, and that the fuse is of the correct rating. This is clearly marked on the case of the power supply. Do not replace the fuse with any other type, as this could become a safety hazard and will void the warranty.**

Always ensure that you use the correct size of power supply for the size of your console. A CPS450 or CPS450B unit is required for all frame sizes except for the 36 input version, which must be powered by the CPS750 or CPS750B.

Overbridge

The Delta 8 overbridge allows monitoring of the signal levels in the 16 return sections, on 16-segment bargraphs, together with the main mix/2-track Return or PFL signal on VU meters.

The overbridge is packed separately from the main console for shipping, and must be attached to the main console before use.

The overbridge is attached to the frame by M4 bolts - two 16mm pan head bolts at either end of the console on the rear (a total of 4), and 5 (20 channel), 6 (28 channel) or seven (36 channel) 12mm countersunk bolts on the top of the console.

Once the overbridge body has been bolted to the frame, the upper ident strip (packed with the overbridge) should be pressed into place to cover the screws on the upper surface of the console.

Plug the cable form the overbridge into the D-type connector on the rear of the console, and tighten up the retaining screws.

When the console is powered up, the two VU meters should be illuminated.

Wiring Considerations

A For optimum performance it is essential for the earthing system to be clean and noise-free, as all signals are referenced to this earth. A central point should be decided on for the main earth point, and all earths should be 'star-fed' from this point. It is recommended that an individual earth wire be run from each electrical outlet, back to the system star point to provide a safety earth reference for each piece of equipment.

B Install separate mains outlets for the audio equipment, and feed these independently from any other equipment.

C Avoid locating mains distribution boxes near audio equipment, especially tape recorders, which are very sensitive to electro- magnetic fields.

D Where possible ensure that all audio cable screens and other signal earths are connected to ground only at their source.

Downloaded from www.Manualslib.com manuals search engine

Examples of use

The diagrams opposite and overleaf show typical applications of the Delta 8 in Production and Recording situations. These examples are of course only a indication of the systems possible with the unique flexibility of the Delta 8, which may be easily reconfigured to ideally suit your particular requirements.

Production

The illustration shows a typical production application. Microphone sources are connected to mono inputs, DAT machines, cart machines etc. are accomodated by Stereo inputs, and these can be routed to the eight groups feeding an 8-track tape machine as required. The tape outputs are monitored through the 'B' returns on the Groups. Aux 1 is used for foldback, and Aux 2 and 3 feed an effects processor, the output of which is returned via two line inputs. The 2-track tape machine takes the stereo mix, and is monitored on the 2-track tape return.

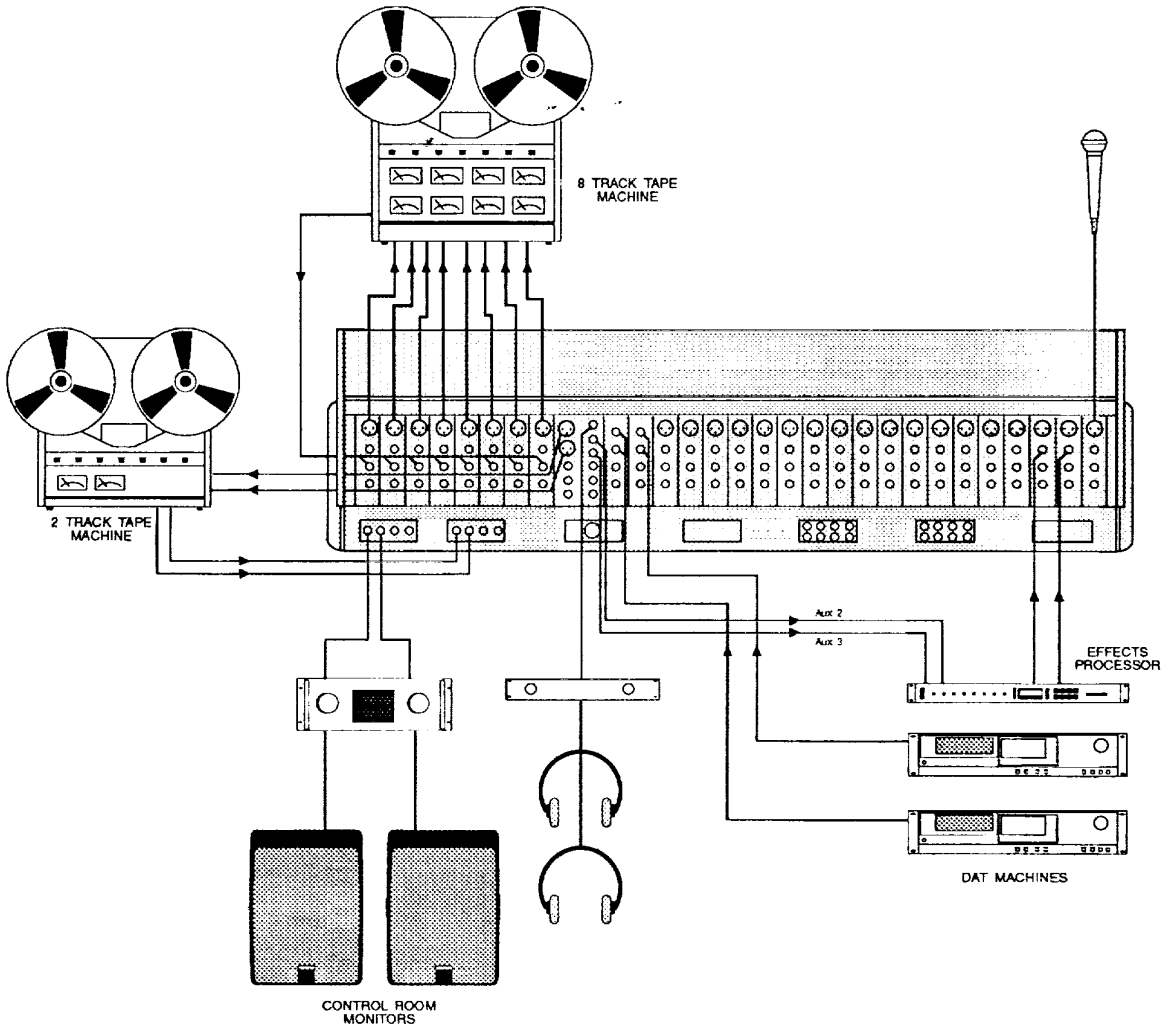

Downloaded from www.Manualslib.com manuals search engine

16 Track Recording

The illustration shows a typical 16 track recording configuration. Microphones and line sources are fed to the input channels, which are routed to Group outputs 1-8 as required. The Group outputs feed tracks 1-8 and 9-16 in parallel, and the outputs from the multitrack machines are monitored through the returns on the Group modules. The stereo mix outputs feed the 2-track mastering recorder, which can be monitored through the 2-track return on the Master module. Aux 1 is used for artistes foldback.

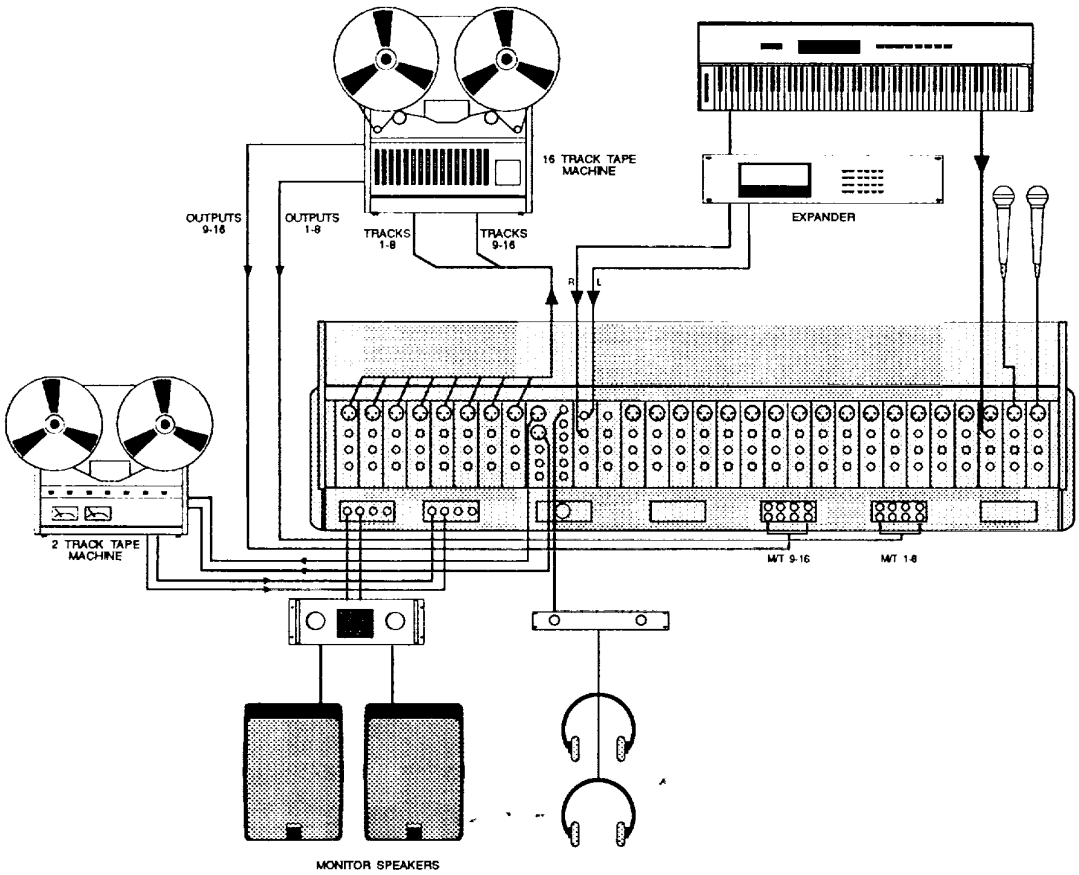

Multitrack Connections

The diagram above illustrates how a multitrack tape machine is normally connected to Delta 8. The 8 group outputs are paralleled to pairs of tape inputs e.g. 1 & 9, 2 & 10 etc. The tape outputs are brought back to the console via the multitrack 1-8 and 9-16 rear connector panels, which are 'normalled' to the Returns on the Group modules (see below).

Normalling

As illustrated above, the usual method of connecting the tape outputs to the console is via the multitrack 1-8 and 9-16 rear connector panels. The jack sockets on these panels are internally connected ('normalled') to both the Return inputs on the Group modules and the Line inputs on the Mono Input modules. This internal connection is broken when a jack plug is inserted in the Return socket (Group modules) or the Line input (Mono Input modules), allowing other external equipment to be connected temporarily without unplugging the multitrack machine. Only the normalled connection to the respective input is affected, leaving the other normalled connection unchanged.

Multitrack 1-8 sockets are normalled to the 'B' Return on the Group modules, and Multitrack 9-16 sockets are normalled to the 'A' Return.

Downloaded from www.Manualslib.com manuals search engine

16 Track Mix-Down

This illustration shows how the configuration might change for mix-down and playback. The tape machine now becomes the primary signal source, and therefore no other input sources are shown. An additional pair of nearfield speakers are connected to the ALT outputs and monitoring can be swapped between these and the main speakers using the ALT button on the Master module. A cassette machine is added, with playback via the 2TB Returns. An effects unit is included, connected to Aux 5/6 and brought back to the console via the returns on the Group modules.

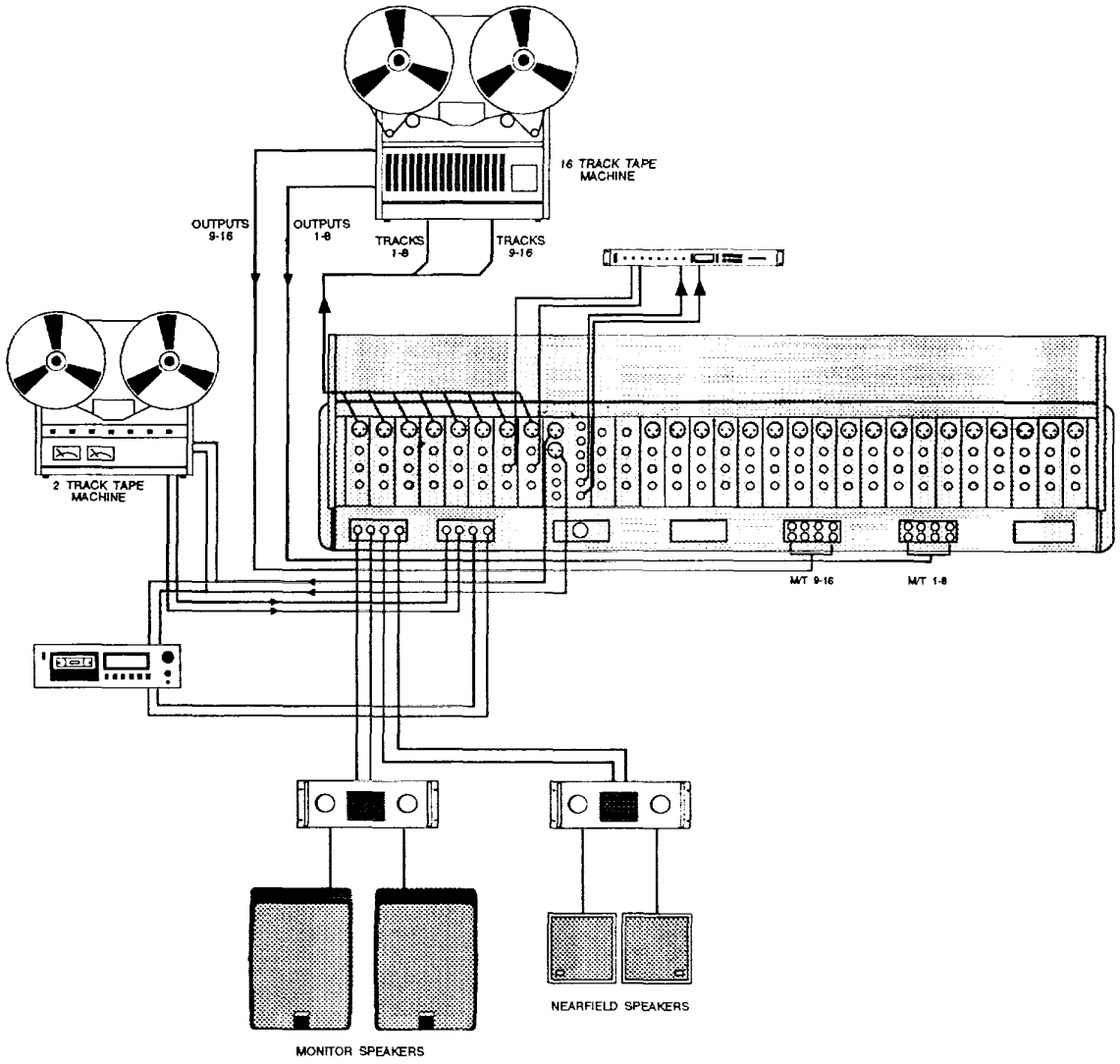

Downloaded from www.Manualslib.com manuals search engine

Downloaded from www.Manualslib.com manuals search engine

Module Block Diagrams

Downloaded from www.Manualslib.com manuals search engine

Mono Input Module

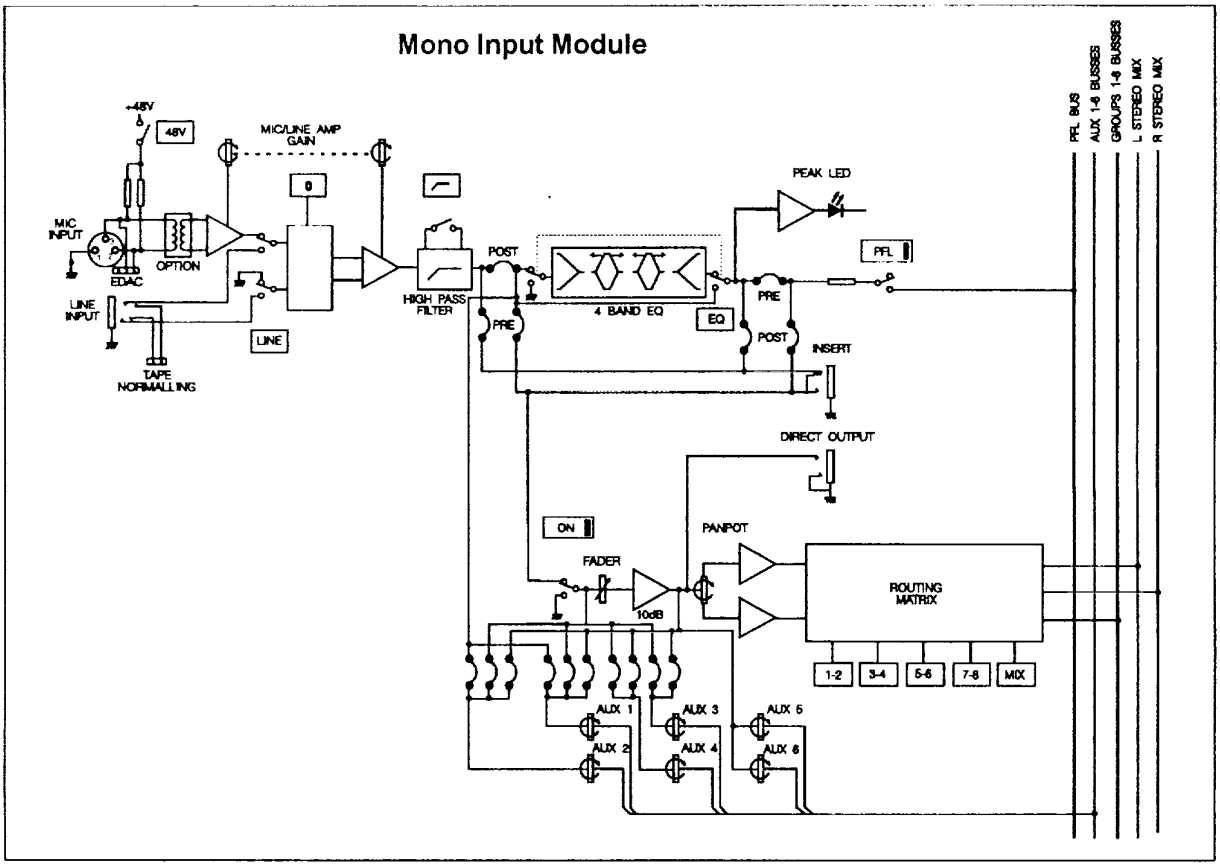

Stereo Input Module

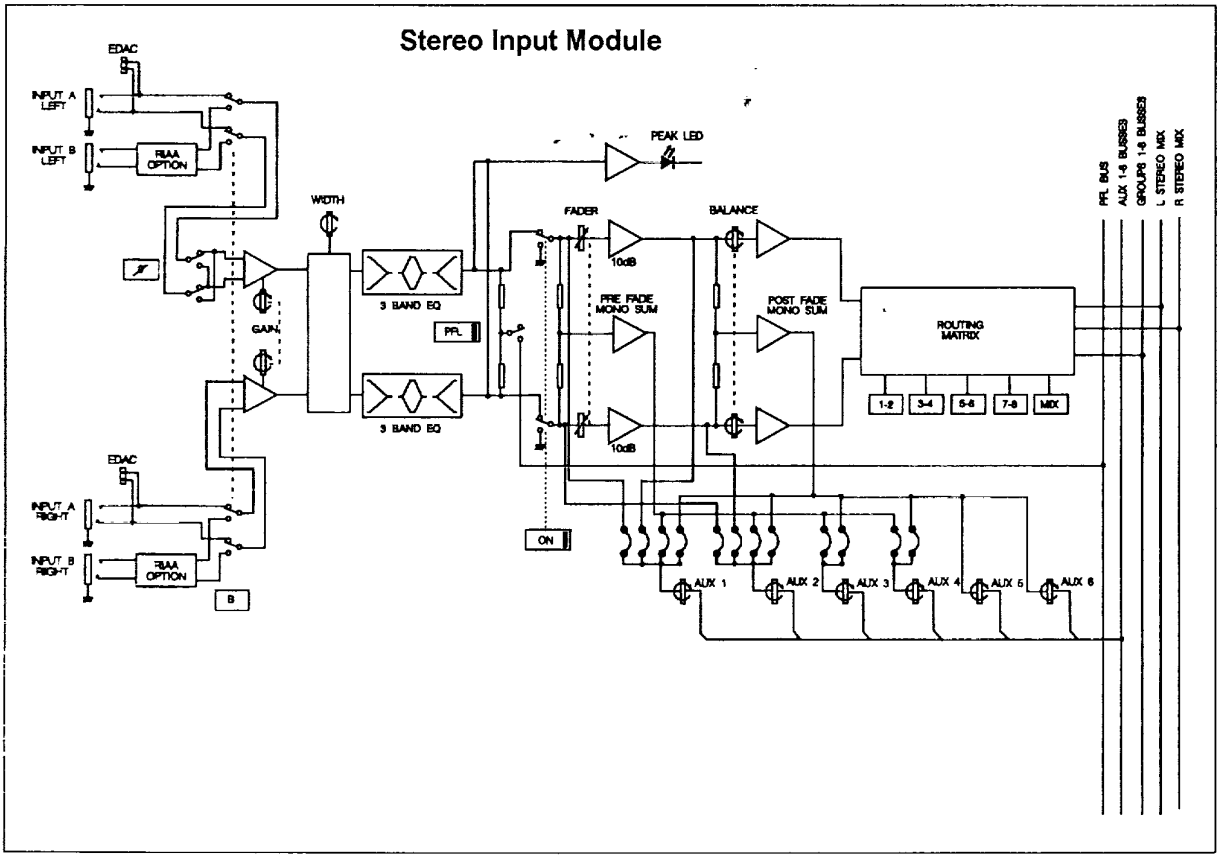

Downloaded from www.Manualslib.com manuals search engine

Dual Line Input Module

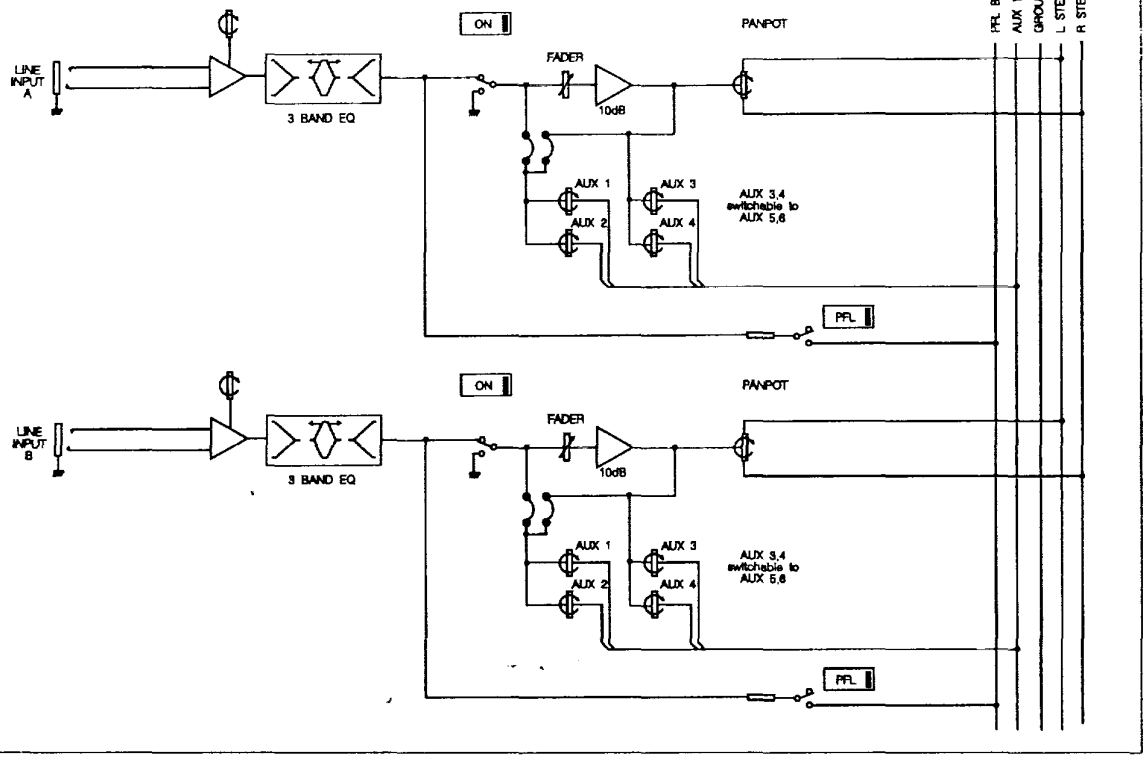

Group Output Module

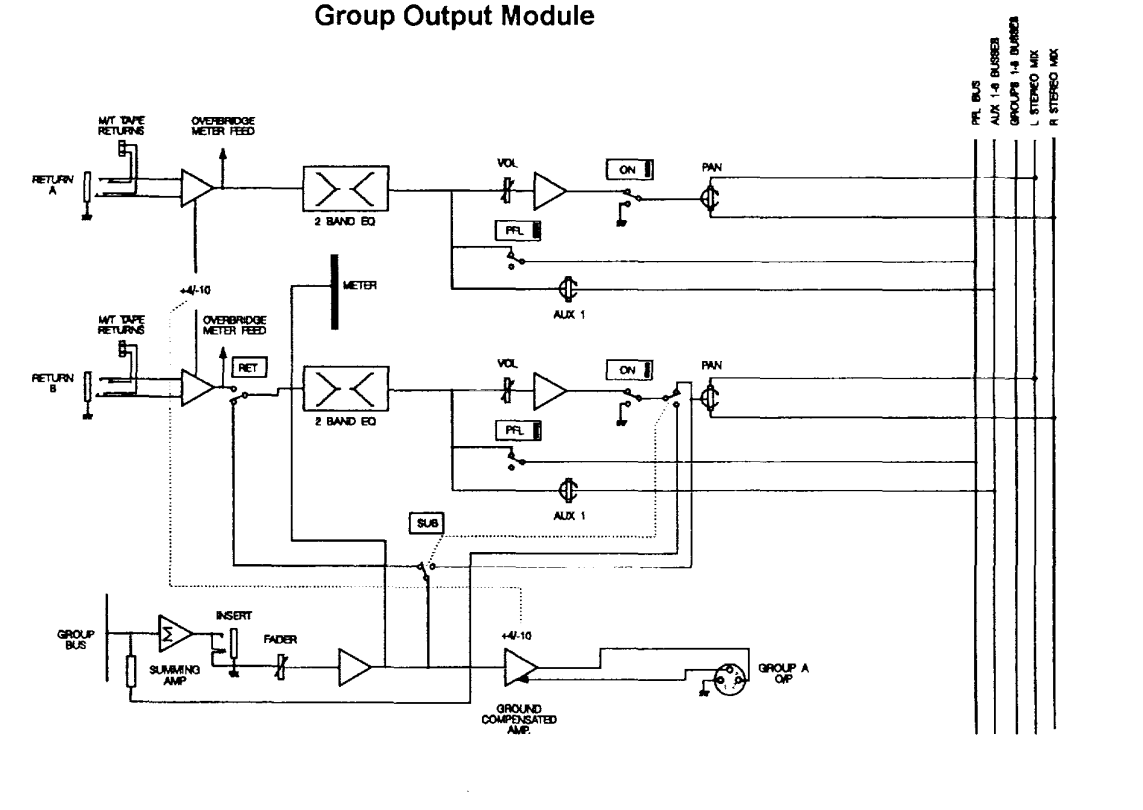

Downloaded from www.Manualslib.com manuals search engine

Master Module

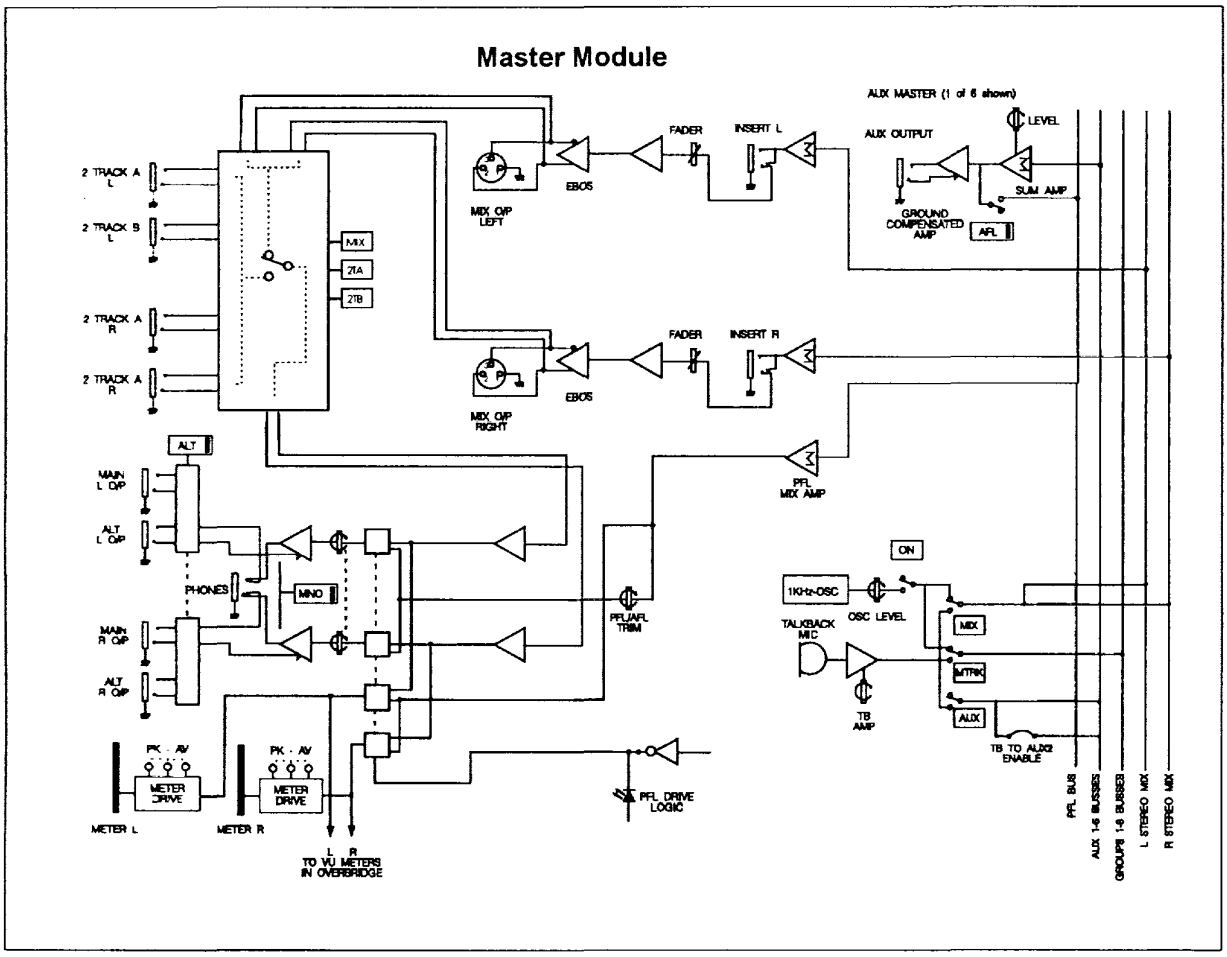

Downloaded from www.Manualslib.com manuals search engine

D214 Mono Input Module

Operation

Specifications

Downloaded from www.Manualslib.com manuals search engine

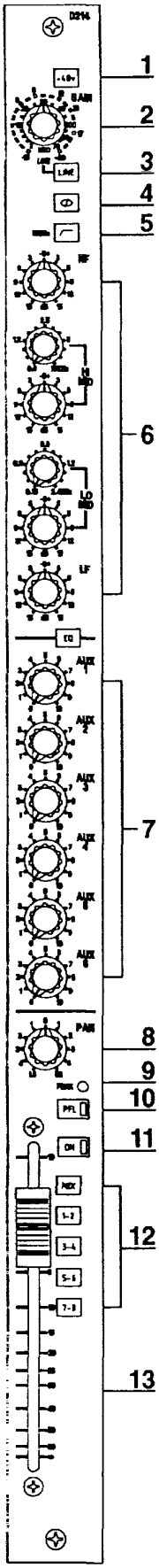

D214 Mono Input Module

Channel Input

1 **+48V** switch applies 48V phantom power to the microphone input.

2 **GAIN** adjusts the sensitivity of both mic and Line inputs. Mic input sensitivity: -2dBu to -70dBu. Line input sensitivity: -20dBu to +10dBu.

3 **LINE** selects the line input to the channel. On inputs 1 - 16, the Line input is normally fed from **MULTITRACK RETURNS 1 - 16**. Inserting a jack into the **LINE I/P** socket overrides this signal.

4 **Ø (PHASE)** reverses the phase of the selected input.

5 **HI-PASS FILTER** inserts a 100Hz second order filter immediately after the input amplifier.

Frequency Response Curves of the Hi-Pass Filter

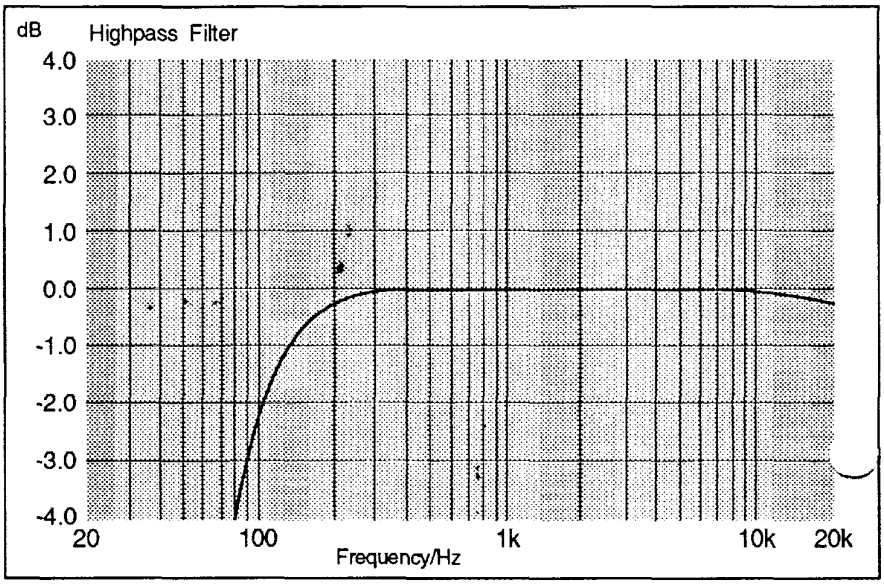

Equaliser

6 The **EQUALISER** is a 4-band semi-parametric. HF. +/- 15dB shelving at a fixed frequency of 12kHz. HI MID. +/- 15dB peaking between 0.6 - 10kHz. Q = 1.5 LO MID. +/- 15dB peaking between 0.15 - 2.5kHz. Q = 1.5 LF. +/- 15dB shelving at a fixed frequency of 60Hz, with 30Hz VLF rolloff. The cut/boost pots are centre detented, the centre position giving a flat response. EQ switches the equaliser into circuit.

Downloaded from www.Manualslib.com manuals search engine

Frequency Response Curves of the Equaliser

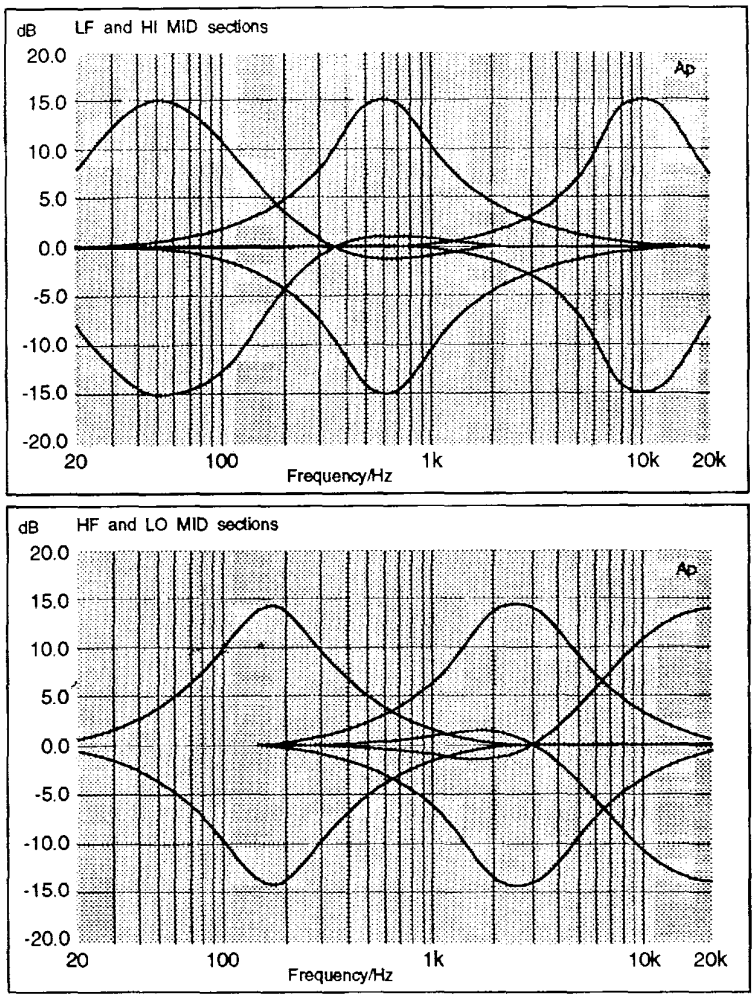

Auxiliaries

7 Six **AUXILIARY SENDS** are provided: Aux sends 1 through 4 have their sources individually selectable by internal jumpers. 1 & 2 can be: pre-EQ, pre-fade, or post-fade. 3 & 4 are either pre- or post-fade. The factory fitted default is AUX 1 and 2 pre-fade, AUX 3 and 4 post-fade. Aux sends 5 and 6 are permanently sourced post-fade.

Routing

8 **PAN** determines the position of the signal within the stereo image. In the centre position (detented) there is a 4.5dB level drop. Pan left feeds the signal to odd numbered busses, pan right to even busses. Panning fully left or right sends signal to only the left or right side respectively.

12 Five **ROUTING SWITCHES** give access in pairs to MIX left and right busses and 8 group busses. The signal may be routed to an individual bus by using the relevant routing switches with the PAN control turned fully left or right.

Downloaded from www.Manualslib.com manuals search engine

Channel Status

9 The **PEAK** LED illuminates 7dB below clipping point, ie, it illuminates when a level of +14dBu is present within the module. It is sourced from the insert send.

10 The illuminated **PFL** switch feeds the pre-fade signal into the monitor system, where it replaces the selected monitor source.

11 The illuminated **ON** switch controls the direct output, channel routing and pre and post fade auxiliary sends.

13 The **FADER** is a 100mm Alps type, with 10dB gain.

The insert point is link selectable to be either pre- or post-EQ. The factory fitted default is post-EQ. Both the send and the return are unbalanced and at a level of -2dBu.

A direct output is provided. It is unbalanced at a nominal level of -2dBu.

The Microphone inputs have provision for optional EDAC multicore interfacing. The signals from the Mic multicore connect in parallel with the XLRs.

The rear connector panel is integral to the module and houses all external interface connectors as shown on the left.

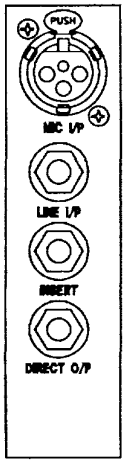

Rear Connector Panel

Mic I/P Female XLR

Pin 1	Screen
Pin 2	Hot
Pin 3	Cold

Line Input 3 Pole Jack

Tip	Hot
Ring	Cold
Sleeve	Screen

Insert 3 Pole Jack

Tip	Return
Ring	Send
Sleeve	Screen

Direct Output 3 Pole Jack

Tip	Hot
Ring	Ground
Sleeve	Screen

Downloaded from www.Manualslib.com manuals search engine

Specifications

Microphone Input:

Electronically balanced, transformer option (Sowter 7026).

Input impedance	>2k ohms
Maximum I/P level	+18dB
Sensitivity range	-2 to -70 dBu
CMRR at max gain	>70dB at 1kHz
EIN 150R source	<-127.5dBu at max. gain.

Line Input:

Electronically balanced.

Input impedance	>10k ohms
Maximum I/P level	+27dBu
Gain range	-20 to +10dBu.
CMRR at max gain	>40dB constant with frequency
EIN, 150R source	<-90dBu at +4dBu sensitivity
Frequency response	+/-0.5dB 20Hz - 20kHz.

Equaliser:

Boost/cut range	+/-15dB
Break Frequencies	HF 12kHz shelving, 2nd order.
	HI MID 0.6 - 10kHz peaking, Q=1.5
	LO MID 0.15 - 2.5kHz peaking, Q=1.5
	LF 60Hz 2nd order shelf with 30Hz VLF rolloff.

Highpass filter-3dB at 100Hz, 2nd order Butterworth (maximally flat).

General:

Insert send level	-2dBu, unbalanced.
Insert send max. O/P	+20dBu into 2k ohms.
Direct output level	-2dBu, unbalanced.
Direct output max. O/P	+21dBu into 600R.
ON switch "off" ratio	>100dB @ 1kHz,> 90dB @ 10kHz
Fader off ratio	>85dB @ 1kHz, >80dB @ 10kHz
	Reference 0dB.
Panpot crosstalk	<-85dB @ 1kHz, 80dB @ 10kHz.
Routing off ratio	1kHz >95dB; 10kHz >90dB
Aux send off-ratio	>80dB @ 10kHz, >85dB @ 1kHz.
THD +20dBu at LINE IN	<0.005% @ 1kHz, <0.015 % @ 10kHz.

Downloaded from www.Manualslib.com manuals search engine

Downloaded from www.Manualslib.com manuals search engine

D212 Stereo Input Module

Operation

Specifications

Downloaded from www.Manualslib.com manuals search engine

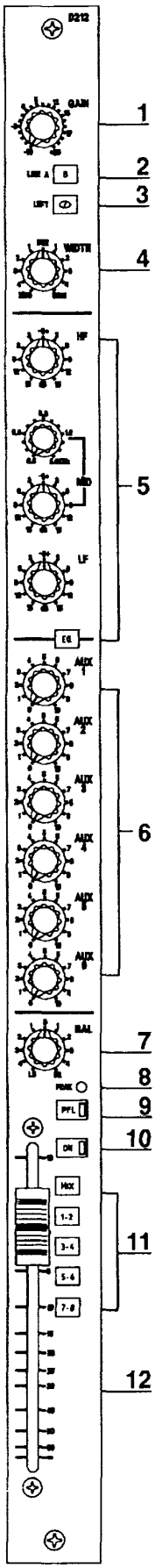

D212 Stereo Input Module

Channel Input

1 **GAIN** adjusts the sensitivity of the line inputs of both channels from -20dBu to +10dBu.

2 **B** selects the alternative B inputs which may be fitted with an RIAA preamp option.

3 **Ø LEFT** reverses the phase of the left channel of the selected input.

4 **WIDTH** is a continuously variable control which allows the width of the stereo image to be varied from mono (ACW) through stereo (centre detent) to phase enhanced wide stereo (CW).

Equaliser

5 The **EQ SECTION** is 3-band semi-parametric. HF. +/- 15dB shelving at a fixed frequency of 12kHz. MID. +/- 15dB peaking between 0.3 - 3kHz. Q = 1.0 minimum. LF. +/- 15dB shelving at a fixed frequency of 60Hz. The cut/boost pots are centre detented, the centre position giving a flat response. **EQ** switches the equaliser into circuit.

Auxiliaries

6 Six **AUXILIARY SENDS** are provided: Auxiliary sends 1 and 2 are internally individually link selectable for pre or post fade, and mono or stereo operation: when stereo is selected, the left channel feeds AUX 1, and the right AUX 2. The factory default is AUX 1 and 2 pre fade, mono. AUX 3 through 6 are permanently sourced mono, with AUX 3 and 4 link selectable to be pre fade or post fade (default), whilst AUX 5 and 6 are permanently post fade.

Frequency Response of the Equaliser

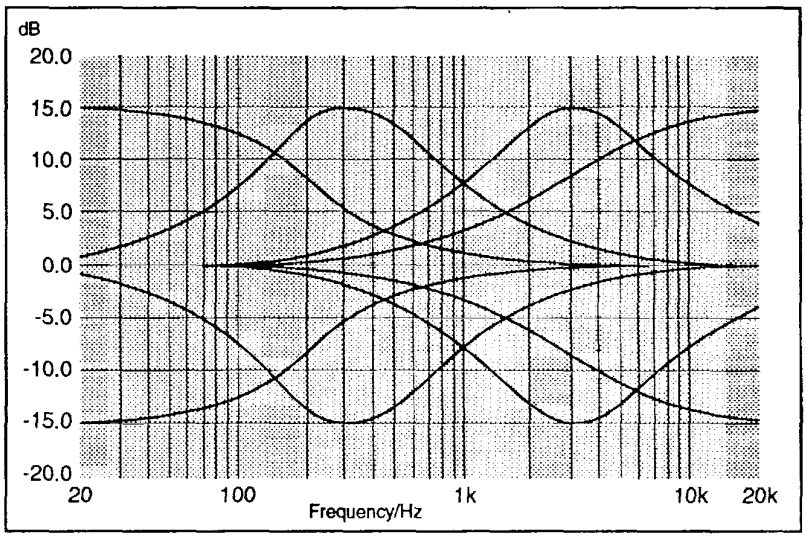

Downloaded from www.Manualslib.com manuals search engine

Routing

7 The **BAL** (balance) control determines the relative level of the L and R signals. In the centre position (detented) its gain is unity. Turning it fully CW increases the right signal by +4.5dB, and totally kills the left signal. Full ACW rotation has the opposite effect. Balance left biases the signal to odd numbered busses, balance right to even busses.

11 Five **ROUTING SWITCHES** give access in pairs to MIX left and right busses and 8 group busses.

Channel Status

8 The **PEAK** LED illuminates 7dB below clipping point, ie, it illuminates when a level of +14dBu is present within the module. It is sourced from the post EQ signal.

9 The illuminated **PFL** switch feeds the pre-fade signal into the monitor system, where it replaces the selected monitor source.

10 The illuminated **ON** switch.

12 The **FADER** is a stereo 100mm Alps type, with 10dB gain.

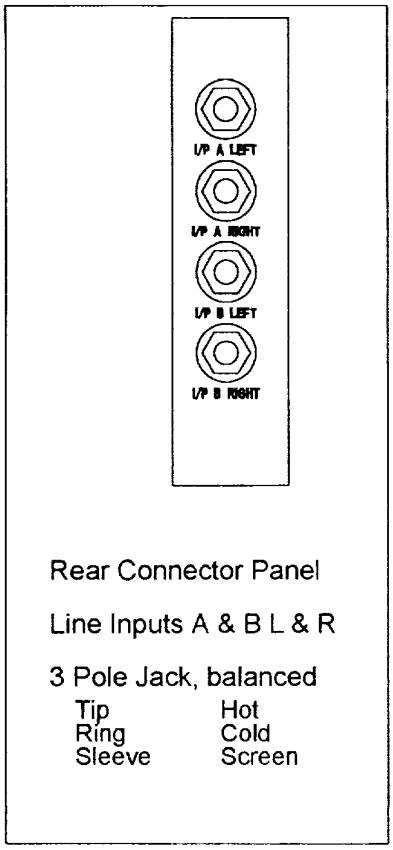

The inputs are electronically balanced.

Line Input A has provision for optional EDAC multicore interfacing. The signal from the Line multicore parallels the input.

The rear connector panel is integral to the module and houses the 4 external interface connectors as shown on the left.

Downloaded from www.Manualslib.com manuals search engine

Specifications

Line inputs

Electronically balanced.	
Input impedance	>10k ohms.
Maximum input level	+27dBu.
Sensitivity range	-20 to +10dBu
CMRR	>40dB @ 1kHz.
Frequency response	+/-0.5dB 20Hz - 20kHz.

Equalisation

Boost/cut range	+/-15dB
Break frequencies	HF 12kHz shelving
	MF 0.3 - 3kHz peaking, Q=1
	LF 60Hz shelving

General

ON switch off ratio	>95dB @ 1kHz, >90dB @ 10kHz
Fader off ratio	>85dB @ 1kHz, >80dB @ 10kHz
Balance pot off ratio	<-85dB @ 1kHz, <-80dB @ 10kHz
Routing off ratio (16 CH routed)	>90dB @ 1kHz,
	>80dB @ 10kHz.
L/R crosstalk,	<-60dB @ 1kHz.
width control at centre	
THD	<0.005% @ 1kHz,
	<0.015% @ 10kHz

Downloaded from www.Manualslib.com manuals search engine

D206 Dual Line Input Module

Operation

Specifications

Downloaded from www.Manualslib.com manuals search engine

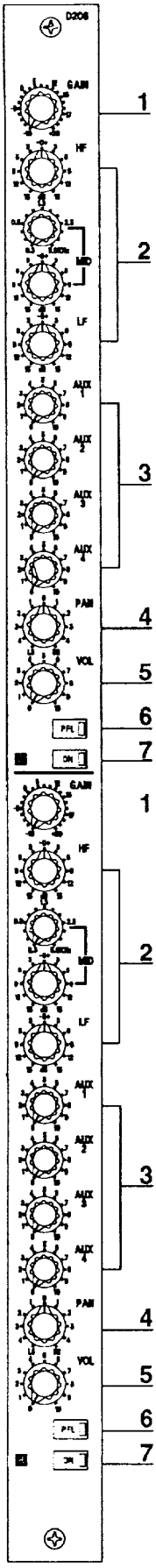

D206 Dual line input module

The dual line input module comprises two identical channels, each outputting to the stereo mix bus.

Channel input

1 The **GAIN** control adjusts the sensitivity of the line input from +10dBu to -20dBu.

Equaliser

2 Each dual line input channel is provided with a 3 band **EQUALISER** comprising shelving HF and LF controls, and a peaking MID control, with a frequency control that allows the selection of centre frequencies between 300Hz and 5KHz. Centre detents on the controls indicate the positions for a flat response.

Frequency Response Curves of the Equaliser

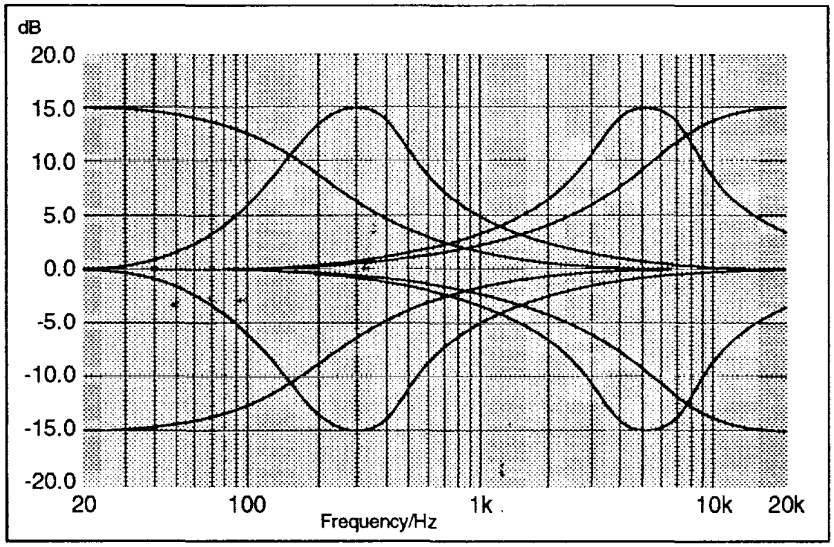

Auxiliaries

3 Four **AUXILIARY SEND** controls are provided: AUX 1 and AUX 2 are factory linked to be fed from a post EQ, pre fader signal, which can be changed to a post EQ, post fade signal if required: see the Delta 8 technical manual for details. AUX 3 and AUX 4 are fed post EQ, post fader, so their levels follow the channel output level set by the fader. Their output is normally routed to Aux sends 3 and 4, but can be changed to Aux sends 5 and 6 by internal switches: again see the technical manual for details.

Downloaded from www.Manualslib.com manuals search engine

Routing

4 The **PAN** control determines the relative levels sent to the L and R outputs. In the centre, equal levels are sent to both sides (with a 4.5 dB level drop relative to fully clockwise or anticlockwise). Rotation fully anticlockwise sends full level to the left bus, cutting the send to the right bus; rotation fully clockwise does the opposite.

Channel status

5 The rotary channel **FADER** (VOL) is the main level control of the channel. When mixing, you'll get optimum headroom and signal to noise ratios by keeping the fader at about the unity gain (7) mark: avoid running the input GAIN too high, and the fader commensurately low, since this gives very little headroom. Similarly, running the input GAIN very low, and the fader fully up (10dB of gain) will increase noise levels, and does not give any available increase in gain on the fader should the source signal level drop unexpectedly.

6 The red illuminated **PFL** switch feeds the post EQ, pre fader signal to the CR monitor outputs (or headphones jack), via the CR Monitor level control, rep lacing the signal currently feeding those outputs. The red PFL LED adjacent to the monitor control on the master module will light to indicate the monitoring status. PFL signals from different sources will be summed.

7 The **ON** switch enables the post EQ signal path: when 'off', all auxiliary sends and L/R outputs are muted. We recommend that you switch all unused channels 'off', to prevent unwanted noise being added to any parts of the mix.

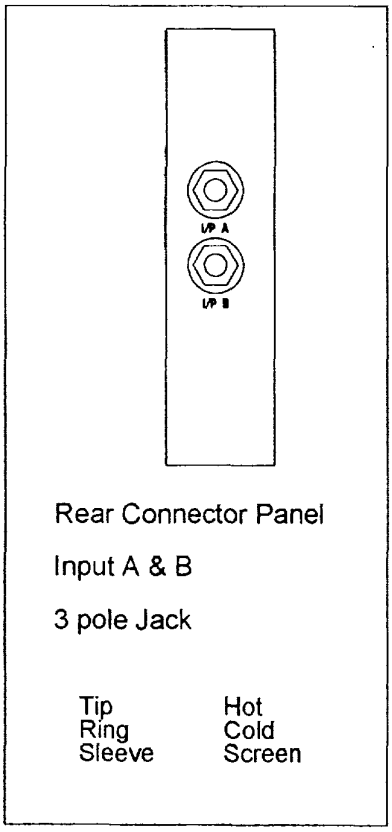

Downloaded from www.Manualslib.com manuals search engine

Specifications

Line Input

Electronically balanced	
Input Impedance	>10kΩ
Maximum Input before clipping	+27dBu
Sensitivity Range	-20 to +10dBu for +4dBu output
CMRR	>40dB at 1kHz
Frequency response	+/-0.5dB 20Hz - 20kHz.

Equalisation

Boost /cut range	+/-15dB
HF	8.5kHz shelving
MF	0.3 - 5kHz peaking, Q=1.3
LF	110Hz shelving

General

ON switch rejection	>95dB at 1kHz; >85dB at 10kHz
Fader rejection	>80dB at 1kHz; >75dB at 10kHz
Panpot rejection	>65dB at 1kHz; >65dB at 10kHz
Aux send rejection	>80dB at 1kHz; >80dB at 10kHz
THD (+20dBu in)	0.005% @ 1kHz; 0.01% @ 10kHz

Downloaded from www.Manualslib.com manuals search engine

D224 Group Output Module

Operation

Specifications

Downloaded from www.Manualslib.com manuals search engine

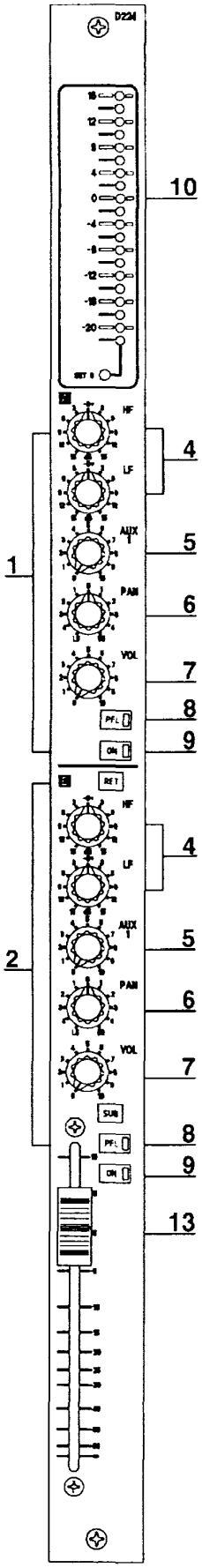

D224 Group Output module

Return

1 UPPER RETURN: in normal operation this input is fed from the Multitrack Tape Returns 9-16 rear connector panel. Inserting a jack into the **RETURN A** socket overrides this signal, allowing an external signal to be returned to the stereo mix bus.

2 LOWER RETURN: this input is fed from the group output or, if the **RET** switch is pressed, an external return signal from the Multitrack 1-8 rear connector panel. It feeds the stereo mix buss. The **SUB** switch converts the group into a sub-group, feeding the group mix signal directly to the stereo mix via the return PAN control. if the **SUB** and **RET** switches are both pressed, then the return signal is routed to the group mix, which is in turn routed to the stereo mix: thus the return signal is under control of the group fader. The diagram on the next page shows how **SUB** and **RET** affect the signal path. Inserting a jack into the **RETURN B** socket overrides the signal from the Multitrack Returns rear connector panel, allowing an external signal to be returned to the mix bus or group.

16-segment LED **METERS** in the overbridge indicate the level in the Returns. The meters are jumper selectable for peak or average response: see the Delta 8 Technical Manual for details.

Equaliser

4 Each return is provided with a 2-band **EQUALISER**, the centre detented controls giving shelving characteristics at 5kHz (HF), and 100Hz (LF).

Frequency Response Curves of the Equaliser

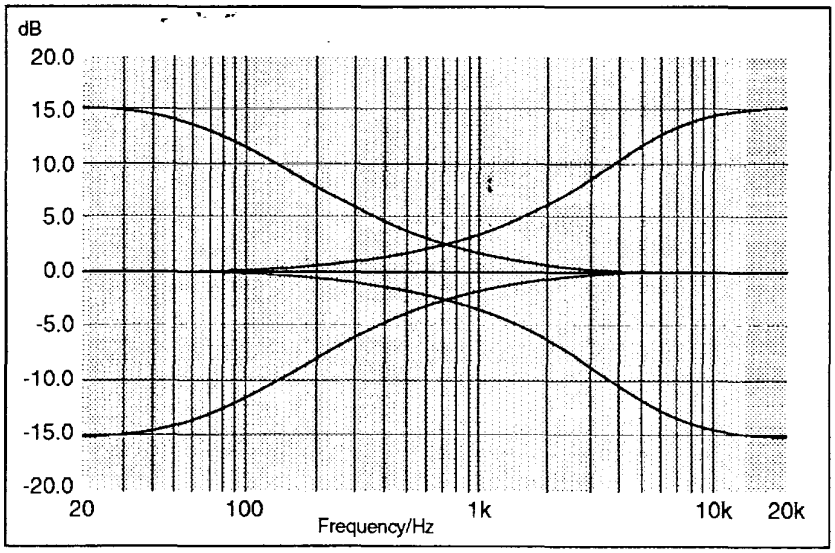

Auxiliary

5 The **AUX 1** control gives a pre fade feed to Auxiliary send 1, enabling the return signals to be sent to a foldback mix, unaffected by the position of the ON switch.

Downloaded from www.Manualslib.com manuals search engine

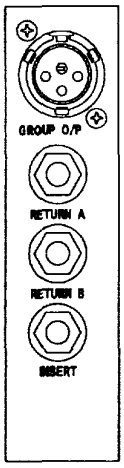

Rear Connector Panel

Group Output 3 Pin XLR

Pin 1	Screen
Pin 2	Hot
Pin 3	Ground Sense (cold)

Tape Returns, 3 Pole Jack

Tip	Hot
Ring	Cold
Sleeve	Screen

Insert, 3 Pole Jack

Tip	Return
Ring	Send
Sleeve	Screen

Routing

6 The **PAN** control sets the position of the return signal across the stereo mix.

Status

3 Group **FADER**: this 100mm fader controls the level of the Group mix and Group output. The nominal output level may be set at either +4dBu, or -10dBV by an internal switch: see the Delta 8 technical manual for details.

7 The **VOL** control determines the level of the return signal.

8 The red illuminated **PFL** switch feeds the post EQ, pre fader signal to the CR monitor outputs (or headphones jack), via the CR Monitor level control, replacing the signal currently feeding those outputs. The red **PFL LED** adjacent to the monitor control on the master module will light to indicate the monitoring status. PFL signals from different sources will be summed.

9 The **ON** switch enables the return signal. If the return is not being used it should be switched 'off', to obtain the best noise performance from the console.

An insert point is provided in the signal path of the group so that an external processing device can be inserted.

The LED bargraph meter (10) indicates the Group output level, and is jumper selectable for peak or average response: see the Delta 8 Technical Manual for details.

Note: For operation with a 16-track tape machine, parallel the group outputs in pairs to the tape machine inputs, e.g. Group 1 to 1&9, Group 2 to 2&10 etc.

NORMAL OPERATION

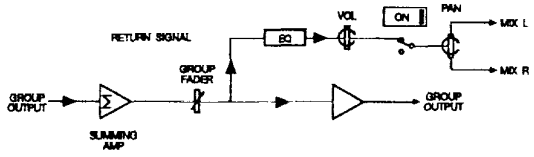

SUB SELECTED

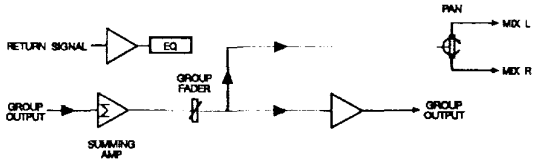

RET SELECTED

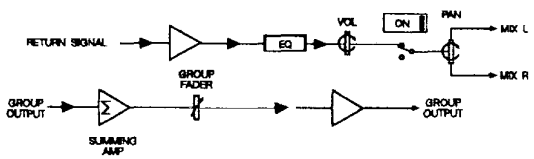

SUB & RET SELECTED

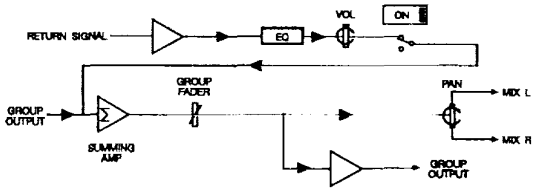

Downloaded from www.Manualslib.com manuals search engine

Group Output

Ground Cancelling.	
Nominal output level	+4dBu/-10dBV, selectable.
Maximum output level	+21dBu into 600Ω
Output impedance	75Ω
Group -> group crosstalk	<-85dBu @ 1kHz,
	<-80dBu @ 10kHz.
Fader off ratio	>80dB @ 1kHz,
	>75dB @ 10kHz.
Bus residual noise	<-93dBu.
Group bus noise, (36 CH routed)	<-80dBu.
THD	<0.005% @ 1kHz,
	<0.01% @ 10kHz.

Group Insert

Insert send level	-2dBu, unbalanced.
Insert send max. O/P	+20dBu into 2kΩ
Insert return impedance	10kΩ

Tape/Effects return

Electronically balanced.	
Input impedance	10kΩ
Nominal input level	+4dBu/-10dBV, selectable.
Maximum input level	+21dB above nominal.
ON switch off ratio	>90dB @ 1kHz,
	>70dB @ 10kHz.

Equalisation

2-band shelving.	
Boost/cut range	+/-15dB
Break frequencies	HF 5kHz.
	LF 100Hz.

Metering

20 segment LED bargraph.	
Response	Peak or average reading
Rise time to -1dB	150m sec, average
	4m sec, peak
Decay time to -20dB	250m sec, average
	1.2 sec, peak.
Accuracy relative to 0dB	+/-1dB.
Calibration range	0db = -2dBu to +20dBu.
	(Nominal o/p level +4dBu)

Downloaded from www.Manualslib.com manuals search engine

D216 Master Module

Operation

Specifications

Downloaded from www.Manualslib.com manuals search engine

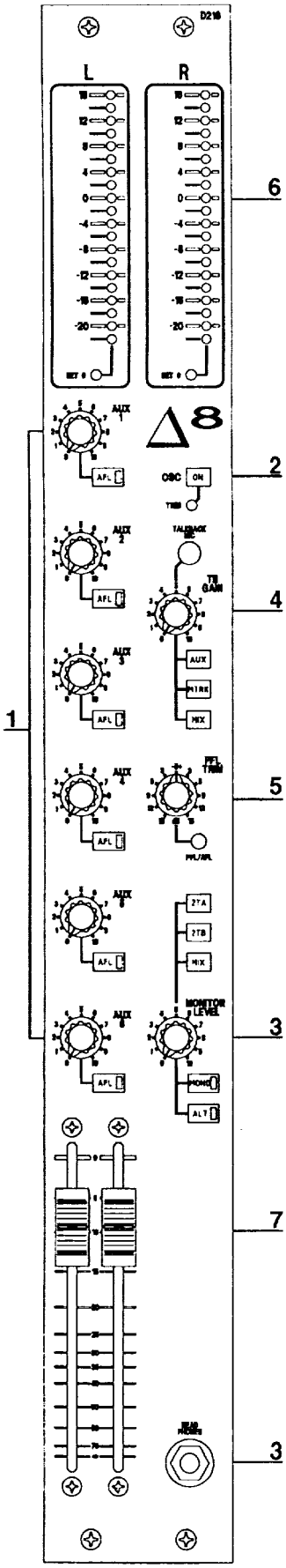

D216 Master Module

Auxiliaries

1 The **AUXILIARY SEND MASTER** level controls set the output level of the auxiliary send mixes: the output level can be conveniently monitored using the aux send AFL switches. Optimum noise performance will be obtained with the send controls on the input channels turned up far enough to give a peak output level (metered using the aux send AFL switch) of +16 with the output level control at unity gain (7 on the scale). The output level should then be turned down to suit the input level of the device the send is driving.

Oscillator

2 A 1kHz **OSCILLATOR** is provided, which feeds a sine wave output of up to +16dBu to all groups (MTRK), the stereo mix (MIX). The oscillator is enabled by the ON switch, and is overridden by the selection of the talkback switch. Oscillator level may be trimmed precisely from the front panel.

Monitoring

3 Provision is made to monitor the stereo mix output or one of two 2-Track Returns (see 2-Track Returns Connector Panel). The CR MON jacks on the C/Room Rear Connector panel are available to drive on external power amplifier/loudspeakers, alternatively stereo headphones can be plugged into the front panel jack, and this will mute the CR MON outputs. The level is set by the **MONITOR LEVEL** control. Selection of either **2TA** or **2TB** routes the respective 2 track tape return input to the monitors.

ALT swaps the monitor output to an alternative pair of monitor speaker outputs, allowing switching between main monitors and a pair of nearfield speakers.

MONO links the left and right monitor signals giving a mono output to speaker feeds or headphones.

Talkback

4 **TALKBACK** can be routed to either Aux send 1 & 2 (**AUX**), the Group busses (**MTRK**), or to the stereo mix (**MIX**). The MTRK and MIX switches have routing priority and override the oscillator. An integral mic is provided, flush mounted behind the front panel, with an associated gain control **TB GAIN**. In order to avoid acoustic feedback, the CR monitor outputs are attenuated ("Dimmed") by approximately 20dB when any talkback switch is selected.

PFL/AFL System

5 **PFL TRIM** provides a master gain adjustment of +/- 15dB, allowing the PFL/AFL level to be set to a comparable level to the monitor source signal, to compensate for difference in loudness of different sources. This trim control only affects the signal to the monitors, leaving the metered signal at its true level. The adjacent LED indicates whenever the PFL/AFL system is active, at which point the monitor is switched fron the selected source to the PFL/AFL signal.

Downloaded from www.Manualslib.com manuals search engine

Output Meters

6 The stereo output **METERS** automatically follow the monitor selection of MIX/2TA/2TB, though the meter reading is independent of the MONITOR LEVEL. The meter reading is relative to the operating level selected (see 7 below).

The meter signal is also shown on twin illuminated **VU METERS** situated in the overbridge above the master module. The VU meters incorporate peak-indicating LEDs which light when the peak signal level exceeeds 10dB above nominal.

Master Outputs

Insert points are provided in the stereo mix signal path to enable the insertion of external processing devices in the signal path.

7 The master output **FADERS** control the level of the stereo mix output. In order to preserve headroom, they should normally be run in the top 10dB of their range. If the stereo output is feeding a device which requires a lower input level (e.g. a domestic tape recorder), the reference level of the output and 2-track return level should be changed using the internal switch: see the Delta 8 technical manual.

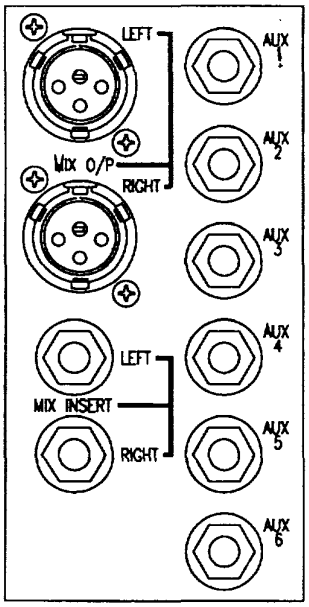

Mix O/Ps Male XLR

Pin 1	Screen
Pin 2	Hot
Pin 3	Cold

Mon O/P, Aux O/Ps

3 Pole Jacks

Tip	Hot
Ring	Ground Sense (cold)
Sleeve	Ground

Mix Inserts 3 Pole Jack

Tip	Return
Ring	Send
Sleeve	Ground

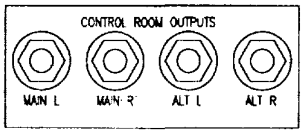

C/Room Rear Connector Panel

C/Room Outputs

3 Pole Jacks

Tip	Hot
Ring	Ground Sense (cold)
Sleeve	Ground

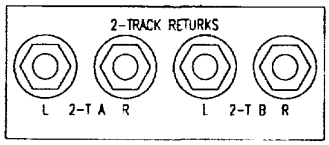

2-Track Returns
Rear Connector Panel

2-Track Tape Returns

3 Pole Jacks

Tip	Hot
Ring	Cold
Sleeve	Ground

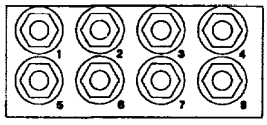

Multitrack 1-8
Rear Connector Panel

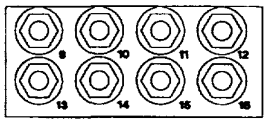

Multirack 9-16
Rear Connector Panel

Multitrack Tape Returns

3 Pole Jacks

Tip	Hot
Ring	Cold
Sleeve	Ground

(see also application drawing on page 10 for details of the normalled connections to Groups and Line inputs)

Downloaded from www.Manualslib.com manuals search engine

Auxiliary Send Outputs

Unbalanced, ground compensated.	
Nominal Level	+4dBu
Maximum output level	+21dBu into >600Ω
Output impedance	75Ω
Master gain control range	+10...-85 dB
Mix bus noise (36ch. frame)	<-80dBu
THD	0.003% at 1KHz
	0.006% at 10KHz

Mix Output

Electronically balanced.	
Nominal output level	+4dBu/-10dBV.
Maximum output level	+26dBu into 600Ω
Output impedance	75Ω
THD	0.003% at 1KHz
	0.006% at 10KHz
Mix fader off ratio	-80dBu @ 1kHz.
Bus residual noise	-92dBu.
Mix bus noise	-80dBu.
(36 channels routed, faders down)	

Insert point

Unbalanced.	
Nominal level	-2dBu.
Output capability	+20dBu into 2kΩ
Return impedance	10k Ω
Minimum load impedance	2k Ω

Phones, Main and Alt Outputs

Ground cancelling.	
Phones o/p capable of	150mW, and
	+20dBu into 600 Ω
Phones Output Impedance	50 Ω
Maximum level	0dBu into 8 Ω

Talkback

Microphone	Internal Electret.

2-Track Returns

Nominal Level	+4dBu or -10dBV
Maximum Return Level	+21dB above nominal

Downloaded from www.Manualslib.com manuals search engine

Oscillator

Max level at group/mix O/P	+16dBu
Frequency	1kHz +/-10%
Distortion	<1% THD

Metering

20 segment LED bargraph.	
Response	Peak or average reading
Rise time to -1db	150m sec, average
	4m sec, peak
Decay time to -20dB	250m sec, average
	1.2 sec, peak.
Accuracy relative to 0dB	+/-1dB.
Calibration range	0db = -2dBu to +20dBu.
	(Nominal o/p level +4dBu)

Downloaded from www.Manualslib.com manuals search engine

Downloaded from www.Manualslib.com manuals search engine

Appendices

Specification Notes

Dimensions

Configurations

Warranty

Glossary

Downloaded from www.Manualslib.com manuals search engine

Specification Notes

SPECIFICATION NOTES AND CONDITIONS

A The console has a nominal output level of +4dBu: all input sensitivities are relative to this: i.e. with line input gain set to '0', an input of 0dBu, will give an output of +4dBu at any group or mix output and, a sensitivity of +4dBu gives unity gain from input to output.

B Noise measurements are taken with 22Hz-22kHz bandwidth, average reading response.

C Distortion measurements are made with an input of +20dBu (line inputs at unity gain) giving an output of +20dBu. The analyser reads THD+N with an average response, over a 10Hz-30kHz bandwidth.

D Frequency response and E.Q. measurements are made with an input of 0dBu to line inputs at unity gain, outputs are quoted relative to 0dBu.

E Crosstalk and rejection measurements are made with an input level of +20dBu (line inputs at unity gain) giving an output of +20dBu on the active signal path. The ratio quoted is relative to +20dBu output.

F Gain tolerance +/-1.5dB or 10% of indicated value, which ever is the greater.

G All crosstalk and rejection figures stated with 16 channels routed to the measured output, where applicable.

H Mix noise figures are stated in two ways:

- Bus residual noise: Noise measured at the output with faders at unity and no channels routed.
- Mix bus noise: Noise measured at the output with 36 channels routed, faders down.

Downloaded from www.Manualslib.com manuals search engine

Dimensions

Delta 8 Outline Dimensions

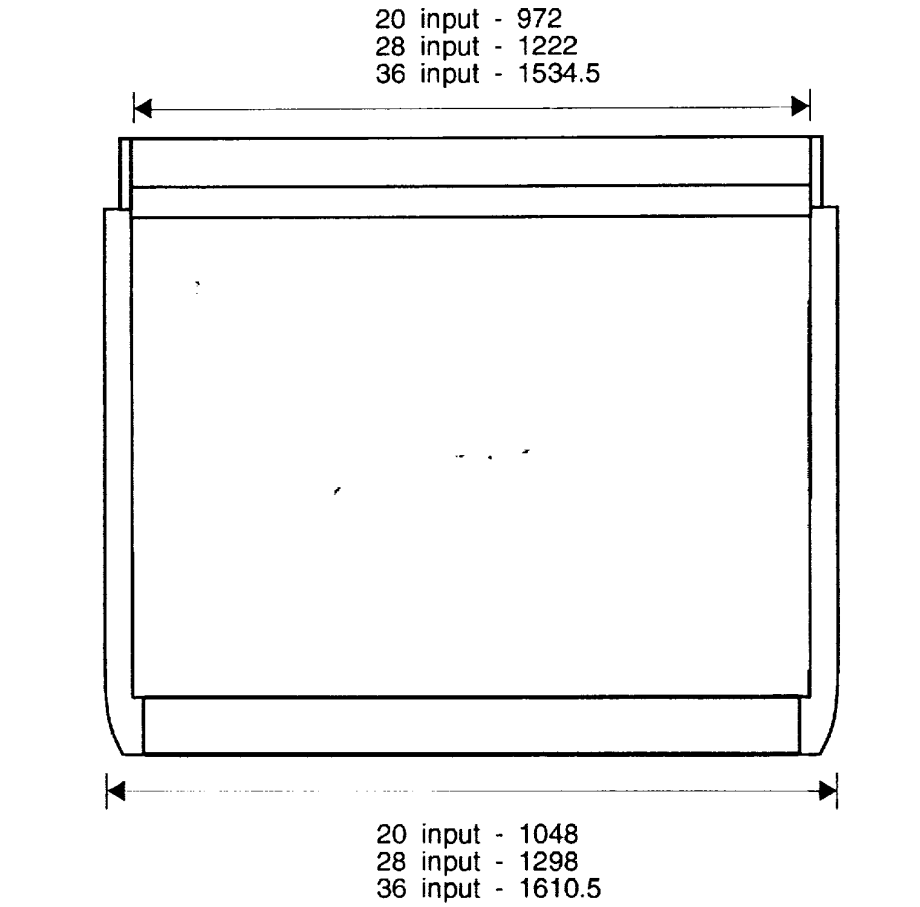

All dimensions shown in millimetres (mm).

Downloaded from www.Manualslib.com manuals search engine

Configurations

20 Input Frame

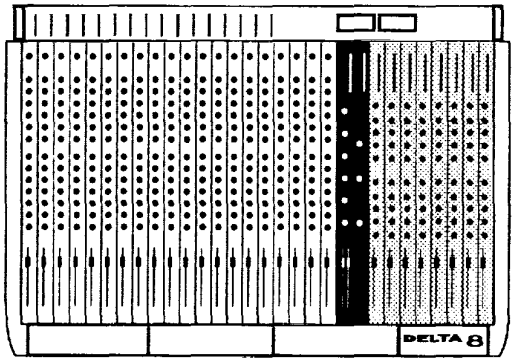

20:8:2

Module Options

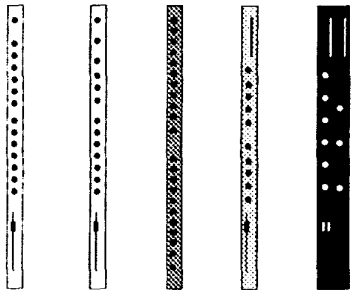

Mono Input | Stereo Input | Dual Line Input | Group Output | Master

28 Input Frame

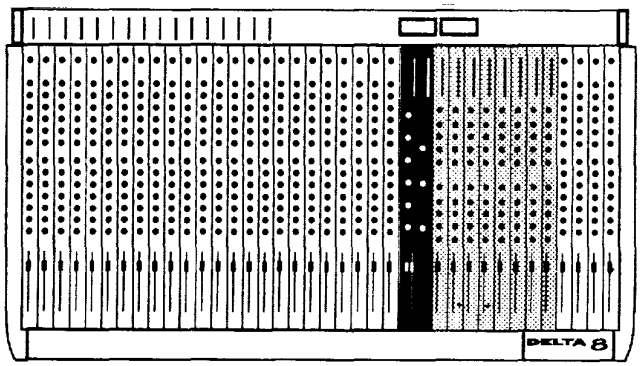

28:8:2

36 Input Frame

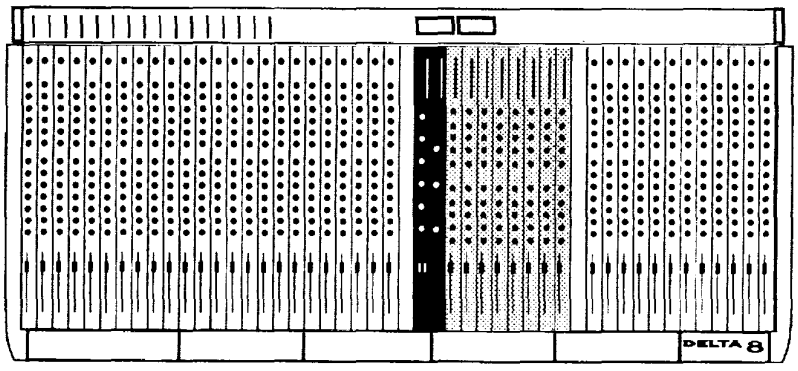

36:8:2

Above only shows the standard production configurations. There are few practical restrictions to the arrangement of modules of the types available. Please consult your dealer for advice on particular layouts.

Downloaded from www.Manualslib.com manuals search engine

Warranty

1 **Soundcraft** means Soundcraft Electronics Ltd.

End User means the person who first puts the equipment into regular operation.

Dealer means the person other than Soundcraft (if any) from whom the End User purchased the Equipment, provided such a person is authorised for this purpose by Soundcraft or its accredited Distributor.

Equipment means the equipment supplied with this manual.

2 If within the period of twelve months from the date of delivery of the Equipment to the End User it shall prove defective by reason only of faulty materials and/or workmanship to such an extent that the effectiveness and/or usability thereof is materially affected the Equipment or the defective component should be returned to the Dealer or to Soundcraft and subject to the following conditions the Dealer or Soundcraft will repair or replace the defective components. Any components replaced will become the property of Soundcraft.

3 Any Equipment or component returned will be at the risk of the End User whilst in transit (both to and from the Dealer or Soundcraft) and postage must be prepaid.

4 This warranty shall only be available if:

a) the Equipment has been properly installed in accordance with instructions contained in Soundcraft's manual; and

b) the End User has notified Soundcraft or the Dealer within 14 days of the defect appearing; and

c) no persons other than authorised representatives of Soundcraft or the Dealer have effected any replacement of parts maintenance adjustments or repairs to the Equipment; and

d) the End User has used the Equipment only for such purposes as Soundcraft recommends, with only such operating supplies as meet Soundcraft's specifications and otherwise in all respects in accordance Soundcraft's recommendations.

5 Defects arising as a result of the following are not covered by this Warranty: faulty or negligent handling, chemical or electro-chemical or electrical influences, accidental damage, Acts of God, neglect, deficiency in electrical power, air-conditioning or humidity control.

6. The benefit of this Warranty may not be assigned by the End User.

7. End Users who are consumers should note their rights under this Warranty are in addition to and do not affect any other rights to which they may be entitled against the seller of the Equipment.

Downloaded from www.Manualslib.com manuals search engine

Glossary

auxiliary send — an output from the console comprising a mix of signals from channels and groups derived independently of the main stereo group mixes. Typically the feeds to the mix are implemented on rotary level controls.

balance — the relative levels of the left and right channels of a stereo signal.

clipping — the onset of severe distortion in the signal path, usually caused by the peak signal voltage being limited by the circuit's power supply voltage.

CR (control room) monitors — loudspeakers used by the operator (engineer) in the control room to listen to the mix.

dB (decibel) — a ratio of two voltages or signal levels, expressed by the equation $dB=20Log_{10}(V1/V2)$.
Adding the suffix 'u' denotes the ratio is relative to 0.775V RMS.

DI(direct injection) — the practice of connecting an electric musical instrument directly to the input of the mixing console, rather than to an amplifier and loudspeaker which is covered by a microphone feeding the console.

equaliser — a device that allows the boosting or cutting of selected bands of frequencies in the signal path.

foldback — a feed sent back to the artistes via loudspeakers or headphones to enable them to monitor the sounds they are producing.

frequency response — the variation in gain of a device with frequency.

(sub) group — an output into which a group of signals can be mixed.

headroom — the available signal range above the nominal level before clipping occurs.

highpass filter — a filter that rejects low frequencies.

line level signals signals — at a nominal level of -10 to +6dBu, coming from a low impedance source.

pan (pot) — abbreviation of 'panorama': controls levels sent to left and right outputs.

peaking — an equaliser response curve affecting only a band of frequencies i.e. based on a bandpass response.

PFL (pre-fade listen) — a function that allows the operator tomonitor the pre-fade signal in a channel independently of the main mix.

rolloff — a fall in gain at the extremes of the frequency response.

shelving — an equaliser response affecting all frequencies above or below the break frequency i.e. ahighpass or lowpass derived response.

spill — acoustic interference from other sources.

talkback — the operator speaking to the artistes or to tape via the auxiliary or group outputs.

transient — a momentary rise in the signal level.

Downloaded from www.Manualslib.com manuals search engine