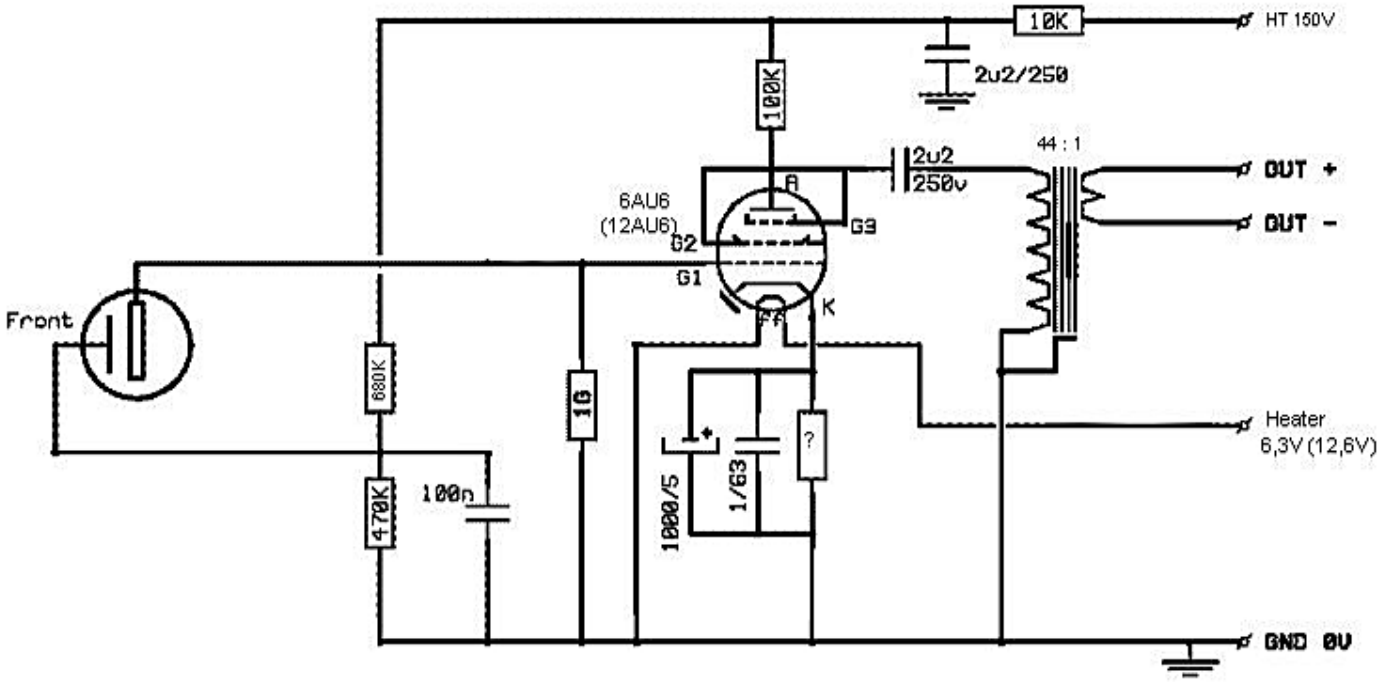
10K
HT 150V
2u2/250
100K
2u2
250v
44 : 1
OUT +
OUT -
6AU6
(12AU6)
A
G3
G2
G1
K
Front
680K
470K
100n
10
1000/5
1/63
?
Heater
6,3V (12,6V)
GND 0V

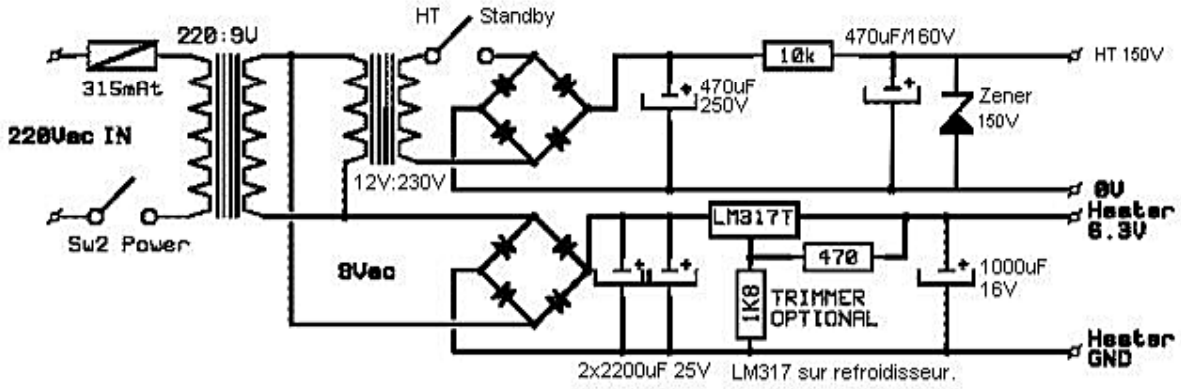
220:9U
315mAt
220Vac IN
Sw2 Power
HT
Standby
12V:230V
9Vac
470uF/160V
10k
470uF
250V
Zener
150V
HT 150V
0V
Heater
6.3V
LM317T
470
1K8
TRIMMER
OPTIONAL
1000uF
16V
Heater
GND
2x2200uF 25V
LM317 sur refroidisseur.