M-Drive

1-Channel high performance amplifier module for subwoofer applications

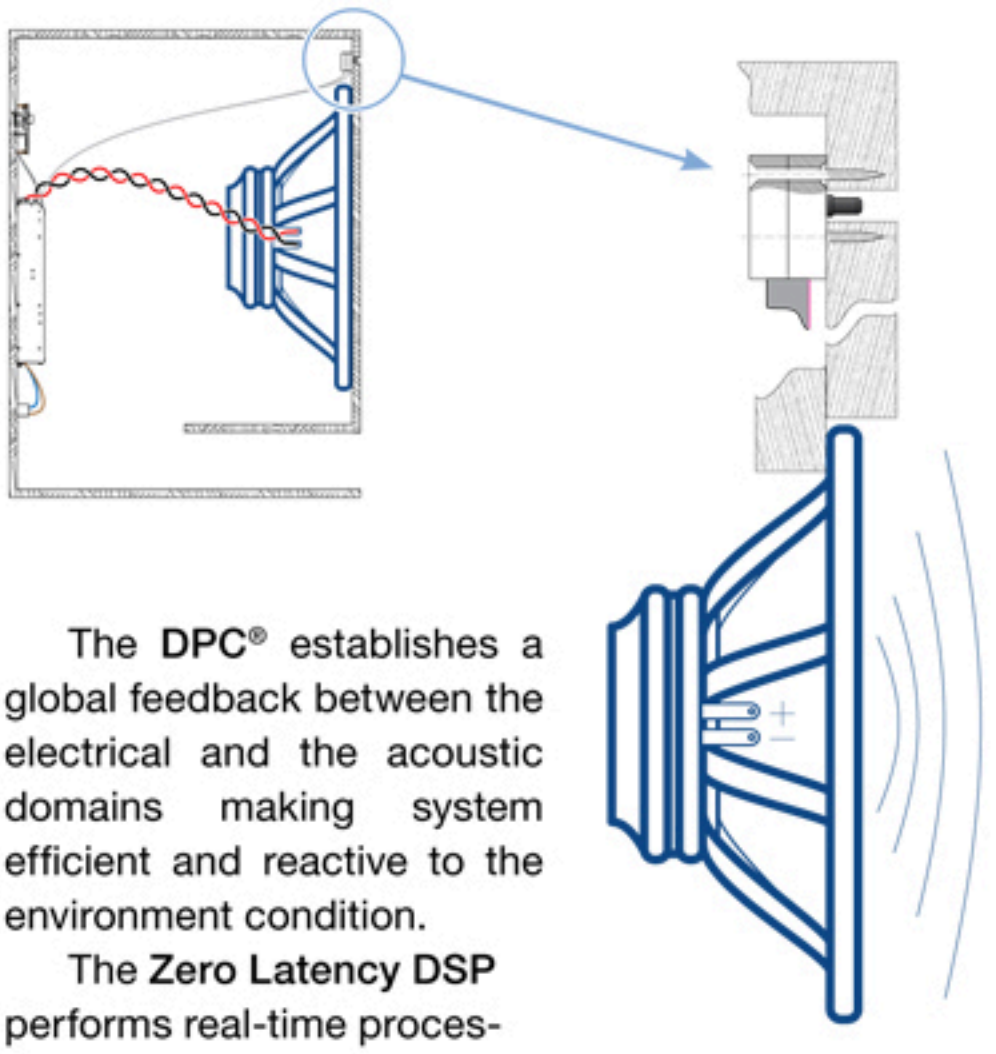

The **DPC®** establishes a global feedback between the electrical and the acoustic domains making system efficient and reactive to the environment condition.

The **Zero Latency DSP** performs real-time processing of the differential pressure control signal in order to adaptively correct the diaphragm displacement. The DPC sensor measures the difference in pressure between the front and the rear sides of the radiating diaphragm and uses this information to alter the behavior of the transducer, according to the actual boundary conditions.

Thanks to the rich graphic user interface it is possible to weight and customize the feedback between the electrical and the acoustic domains.

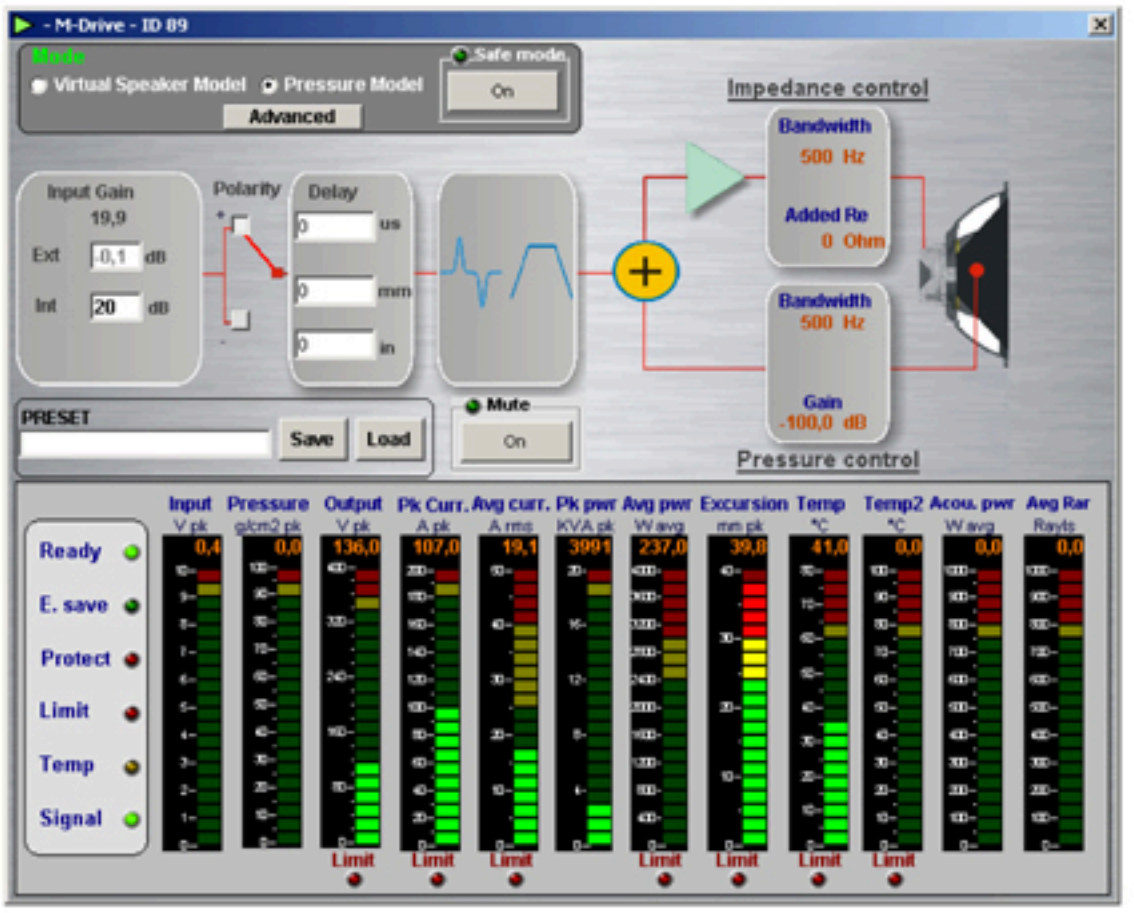

Specifications

Output stage	
Peak Unclipped Voltage @ 2 Ω, 1 Cycle 50 Hz (20ms)	244 V_{peak}
Maximum Output Power @ 2 Ω, 1 Cycle 50 Hz (20ms)	14970 W_{avg}
Peak Unclipped Voltage @ 4 Ω, 1 Cycle 50 Hz (20ms)	270 V_{peak}
Maximum Output Power @ 4 Ω, 1 Cycle 50 Hz (20ms)	9167 W_{avg}
Peak Unclipped Voltage @ 8 Ω, 1 Cycle 50 Hz (20ms)	280 V_{peak}
Maximum Output Power @ 8 Ω, 1 Cycle 50 Hz (20ms)	4930 W_{avg}
Output Noise Floor @ 4 Ω (input terminated on 600 Ω)	2 mV_{rms} (A-Weighted)
Max output voltage	310 V_{peak}
Peak Output Current before Shut Down	200 A_{peak}
Short Term rms Current (t < 500ms)	120 A_{rms}
Long term rms Current (t > 500ms)	35 A_{rms}

Power supply	
Maximum Mains Continuous Power @ 240 V_{ac}	5500 W_{avg}
Maximum Mains Continuous Power @ 120 V_{ac}	4000 W_{avg}
Stored Energy Available for Output Stages	520 J (26 kW in 20 ms)
Maximum Long Term Power (thermal limit)	2000 W_{avg}

AC Mains power	
Nominal voltage	100 - 240 V_{rms} @ 50/60Hz
Operating range	90 - 260 V_{rms}
Efficiency	>75% (typical)
Power factor	>0.90 @ 4 Ω, full power
Power consumption	
I/8 of max power @ 4 Ω	1000 W
Max aux supply current draw	200 mA
Max environmental operating temperature	45°C (113°F)

Construction	
Dimension (L x H x W)	400 mm x 150 mm x 70 mm 15.75 x 5.90 x 2.75 in
Weight	4.84 kg (10.67 lb)

Application examples

M-Drive can easily drive multiple speakers parallel connected at very low impedance, such as 4x 18" @ 4 Ω. Please note that the following configuration examples do not cover all possible applications.

2 x 21"	4 x 18"	M-Force
	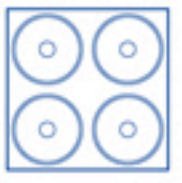	

Powersoft S.p.A.
Via Enrico Conti, 5 - 50018 Scandicci (FI) Italy
Tel: +39 055 735 0230 - Fax: +39 055 735 6235
www.powersoft-audio.com

M-Drive

1-Channel high performance amplifier module for subwoofer applications

M-Drive is the most powerful amp module ever built.

Showing amazing figures in terms of both output voltage (310 V_{peak}) and current capabilities (200 A_{peak}), it's able to drive even the most demanding applications of selfpowered subwoofers.

Specifically designed to fully exploit the potential of M-Force, the innovative transducer developed by Powersoft, the M-Drive is able to handle extremely low impedance loads, which makes it the perfect solution for any configuration of multiple traditional transducers.

M-Drive can be equipped with any Powersoft or third-party DSP solution, and integrates DPC technology used in both IPAL and M-Force systems.



- Self powered subwoofers
- Low impedance, multiple transducers applications
- Very low distortion and high SPL systems
- Steerable low frequency arrays
- M-Force equipped loudspeakers

M-Force is a Powersoft patented technology for low-frequency transducers.

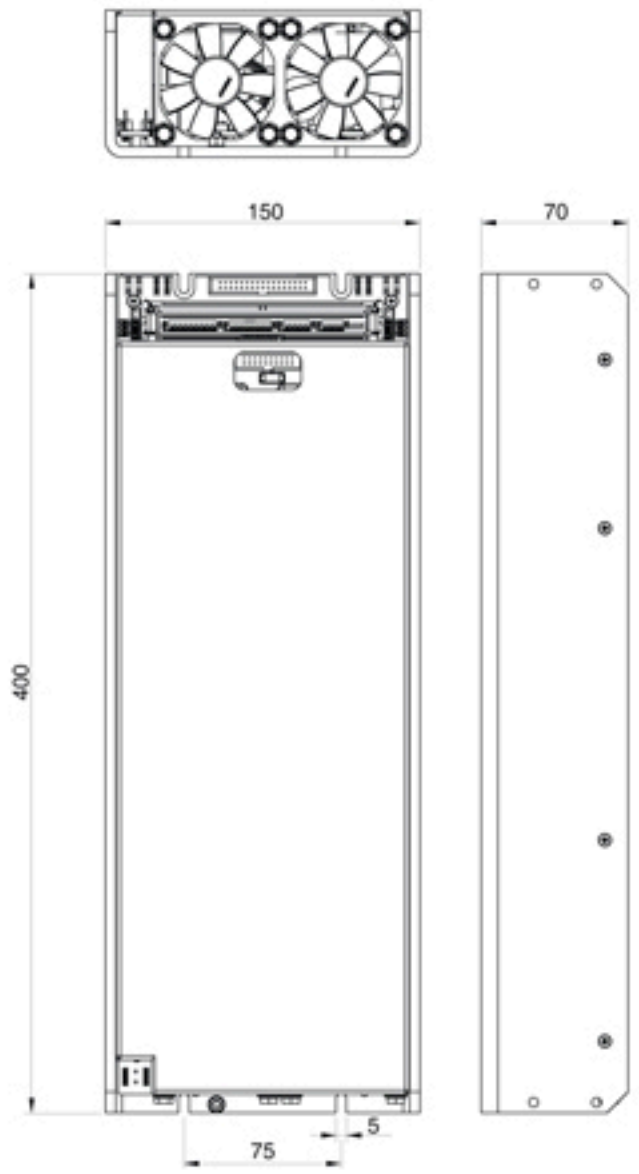

FIXED switching frequency · SRM · PFC · DPC® DIFFERENTIAL PRESSURE CONTROL PATENTED · DSP optional

Output stage	
Peak Unclipped Voltage @ 2 Ω, 1 Cycle 50 Hz (20ms)	244 V_{peak}
Maximum Output Power @ 2 Ω, 1 Cycle 50 Hz (20ms)	14970 W_{avg}
Peak Unclipped Voltage @ 4 Ω, 1 Cycle 50 Hz (20ms)	270 V_{peak}
Maximum Output Power @ 4 Ω, 1 Cycle 50 Hz (20ms)	9167 W_{avg}
Peak Unclipped Voltage @ 8 Ω, 1 Cycle 50 Hz (20ms)	280 V_{peak}
Maximum Output Power @ 8 Ω, 1 Cycle 50 Hz (20ms)	4930 W_{avg}
Max output voltage	310 V_{peak}
Peak Output Current before Shut Down	200 A_{peak}

- Efficiency and robustness
  - ✓ Maximize performances, minimize consumption
  - ✓ Patented SRM (Smart Rails Management) technology allows to maximize the efficiency of the system and drastically reducing power consumption at any load condition.
- Complete set of protections
- Powerful and flexible signal processing tools
  - ✓ Thanks to the compatiblity with all Powersoft DSP solutions, performances can be easily tailored to fit your deseign with Armonía Pro Audio Suite™.
  - ✓ Compatible with Powersoft DPC® technology for complete control over the sonic performance of the whole system regardless of acoustic load.

Data are subject to change without notice
© 2014 Powersoft | All right reserved
powersoft_MDrive_data_en_v1.0
DO000186.00