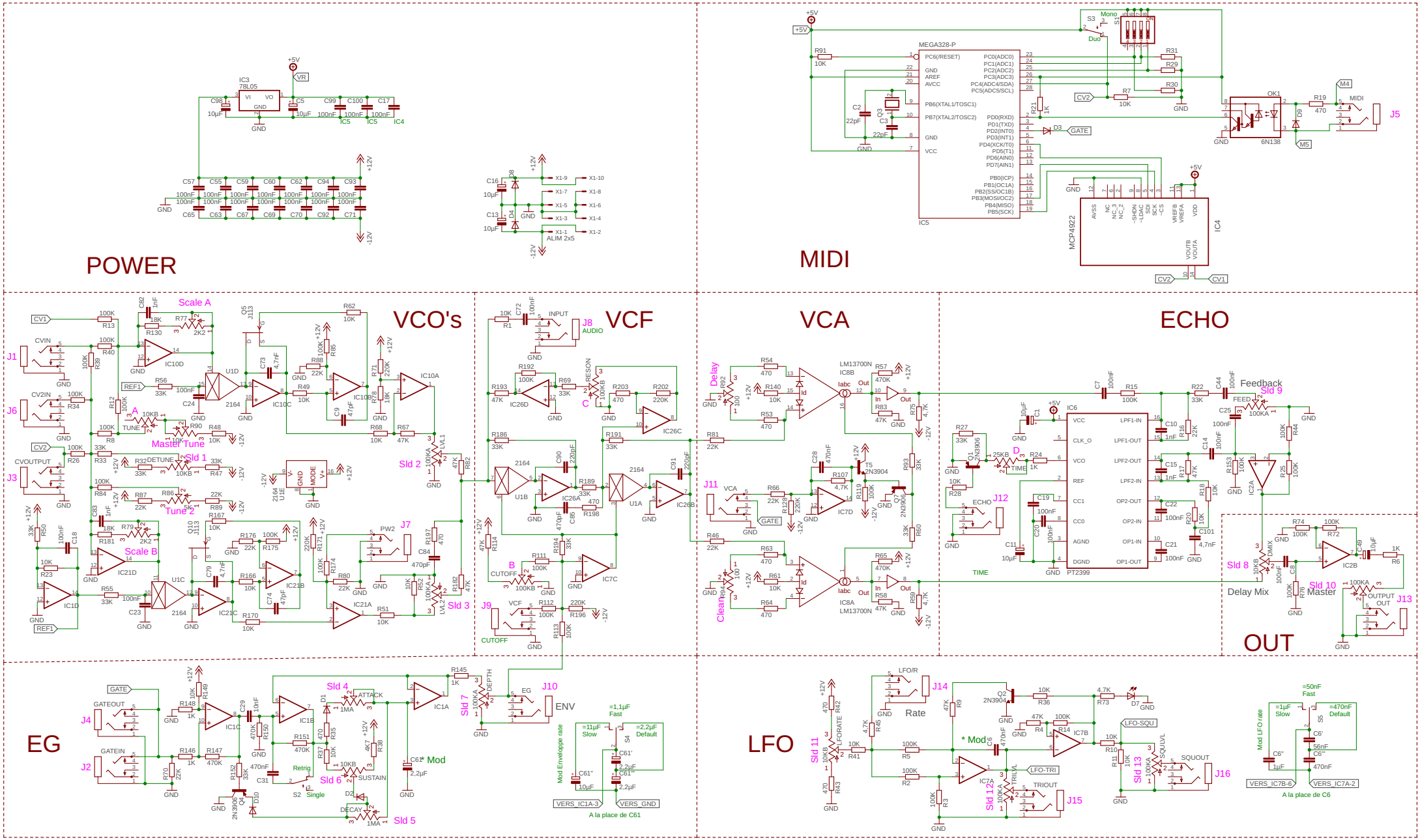
POWER
MIDI
VCO's
VCF
VCA
ECHO
OUT
EG
LFO
MEGA328-P
MCP4922
6N138
Master Tune
Tune 2
Scale A
Scale B
Feedback
Delay Mix
Master
Delay
Clean
Rate
Mod
ENV
A la place de C61
A la place de C6