KURZWEIL

PC88

Service Manual

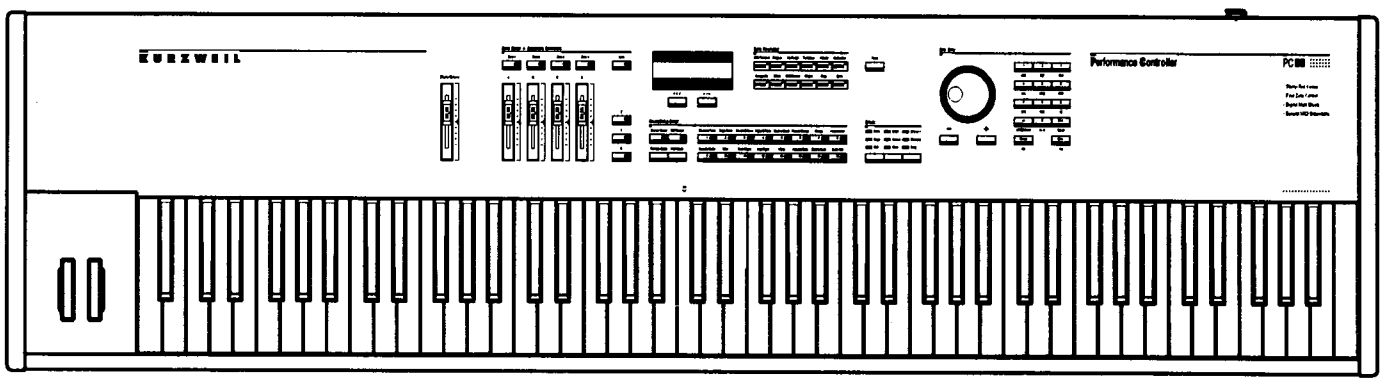

©1995 All rights reserved. Kurzweil is a product line of Young Chang Co.; Kurzweil, PC88, and VGM are trademarks of Young Chang Co. All other products and brand names are trademarks or registered trademarks of their respective companies. Product features and specifications are subject to change without notice.

Part Number: 910276 Rev. A

INSTRUCTIONS PERTAINING TO A RISK OF FIRE,
ELECTRIC SHOCK, OR INJURY TO PERSONS

IMPORTANT SAFETY AND INSTALLATION INSTRUCTIONS

WARNING - When using electronic products, basic precautions should always be followed. Read all of the Safety and Installation Instructions before using the product.

Do not use this product near water, such as near a bathtub, sink, in a wet basement, near a swimming pool, or the like.

This product, in combination with an amplifier and speakers or headphones, may be capable of producing sound levels that could cause permanent hearing loss. Do not operate for a long period of time at a high volume level of at a level that is uncomfortable. If you experience any hearing loss or ringing in the ears, you should consult an audiologist.

The product should be located away from heat sources such as radiators, heat registers, or other products that produce heat.

The product should be connected to a power supply only of the type described in the operating instructions or as marked on the product.

This product is equipped with a polarized line plug (one blade wider than the other). This is a safety feature. If you are unable to insert the plug into the outlet, contact an electrician to replace your obsolete outlet. Do not defeat the safety purpose of the plug.

The product should be serviced by qualified service personnel when:

A. The plug has been damaged; or
B. Objects have fallen upon, or liquid has been spilled into the product; or
C. The product has been exposed to rain; or
D. The product does not appear to be operating normally or exhibits a marked change in performance; or
E. The product has been dropped, or the enclosure damaged.

Do not attempt to service the product. All servicing should be referred to qualified service personnel.

WARNING - Do not place the power cord, or the product in a position where anyone could trip over, walk on, or roll equipment over them. Do not allow the product to rest on or be installed over cords of any type. Do not place the power module where it cannot receive cooling air, such as under a rug. Improper installations of this type may create the possibility of a fire hazard and/or personal injury.

RADIO AND TELEVISION INTERFERENCE

WARNING - Changes or modifications to this instrument not expressly approved by Young Chang could void your authority to operate the instrument.

IMPORTANT - When connecting this product to accessories and/or other equipment use only high quality shielded cables.

NOTE: This instrument has been tested and found to comply with the limits for a Class B digital device, pursuant to Part 15 of the FCC Rules. These limits are designed to provide reasonable protection against harmful interference in a residential installation. This instrument generates, uses, and can radiate radio frequency energy and, if not installed and used in accordance with the instructions, may cause harmful interference to radio communications. However, there is no guarantee that interference will not occur in a particular installation. If this instrument does cause harmful interference to radio or television reception, which can be determined by turning the instrument off and on, the user is encouraged to try to correct the interference by one or more of the following measures:

- Reorient or relocate the receiving antenna.
- Increase the separation between the instrument and the receiver.
- Connect the instrument into an outlet on a circuit other than the one to which the receiver is connected.
- If necessary consult your dealer or an experienced radio/television technician for additional suggestions.

NOTICE

This apparatus does not exceed the Class B limits for radio noise emissions from digital apparatus set out in the Radio Interference Regulations of the Canadian Department of Communications.

AVIS

Le present appareil numerique n'emet pas de bruits radioelectriques depassant les limites applicables aux appareils numeriques de la class B precrites dans le Reglement sur le brouillage radioelectrique edicte par le ministere des Communications du Canada.

Table of Contents

Chapter 1, Basic Operation

Rear Panel 1-1
- Power 1-1
- MIDI 1-1
- LCD Contrast Adjustment 1-2
- Switch Pedals 1-2
- Continuous Control Pedals 1-2
- Audio Outs 1-3

Front Panel 1-3
- LCD and Cursor Buttons 1-3
- Sound/Setup Select 1-4
  - Internal Voices 1-4
  - MIDI Setups 1-4

Zone Parameters 1-5
Zone Select and Assignable Controllers 1-5
Data Entry 1-6
Master Volume 1-7
Panic Button 1-7
Effects 1-8

Chapter 2, Diagnostics

Diagnostic Tests 2-1
Scanner Tests 2-1
Entering Diagnostics 2-2
LCD and Control Panel Buttons 2-3
Diagnostic Tests 2-4
- Menu Mode 2-4
- Burn-in Mode 2-4
- Debug Mode 2-5
- Sound Mode 2-6

Description of Tests 2-7
- CPU Test 2-7
- Program ROM Test 2-7
- RAM Test 2-7
- NVRAM Test 2-8
- MIDI UART Test 2-8
- Scanner Test 2-9
- Parallel I/O (PI/O) Test 2-9

Timer Test 2-9
Homer Test 2-10
Sound ROM Test 2-10
Marge Test 2-11
Delay RAM Test 2-11
LCD Test 2-11
VGM Port Test 2-12
Sound Test 2-13
Scanner Tests 2-14
Data Wheel 2-14
Front Panel Buttons 2-15
Front Panel Sliders 2-15
Keyboard 2-16
Mod Wheels 2-17
Switch Pedals 2-17
Continuous Control Pedals 2-18

Chapter 3, Disassembly/Assembly

Introduction 3-1
EMI Shields/Enclosure Support Wall 3-2
Figure 3.1 3-2
Assembly Instructions 3-3
EMI Shields 3-4
Figure 3.2 3-4
Opening the PC88 3-5
Figure 3.3 3-5
Removing the Top Cover Assembly 3-6
Figure 3.4 3-6
Figure 3.5 3-7
Figure 3.6 3-8
Replacing the Top Cover 3-9
Removing the I/O Board 3-10
Replacing the I/O Board 3-11
Removing the Control Panel/Switch Board 3-11
Replacing the Control Panel/Switch Board 3-12
Removing the LCD Board 3-13
Replacing the LCD Board 3-14
Removing the Slider Board 3-15
Replacing the Slider Board 3-15
Removing the Engine Board 3-16
Replacing the Engine Board 3-16
Removing the VGM Board 3-17

Replacing the VGM Board 3-17
Enclosure Support Wall 3-18
Opening the PC88 3-18
Figure 3.7 3-18
Figure 3.8 3-19
Removing the Top Cover Assembly 3-20
Figure 3.9 3-20
Figure 3.10 3-21
Figure 3.11 3-22
Replacing the Top Cover 3-23
Removing the I/O Board 3-24
Replacing the I/O Board 3-25
Removing the Control Panel/Switch Board 3-25
Replacing the Control Panel/Switch Board 3-26
Removing the LCD Board 3-27
Replacing the LCD Board 3-28
Removing the Slider Board 3-28
Replacing the Slider Board 3-29
Removing the Engine Board 3-30
Replacing the Engine Board 3-30
Removing the VGM Board 3-31
Replacing the VGM Board 3-31
Removing the Mod Wheel Assembly 3-32
Removing the Keyboard 3-33
Figure 3.12 3-33
Removing a Key 3-35
Figure 3.13 3-35
Natural/White Keys 3-36
Sharp/Black Keys 3-36
Replacing a Key 3-37
Removing the Keyboard Contact Boards 3-38
Removing the Treble Contact Board 3-38
Replacing the Treble Contact Board 3-39
Removing the Bass Contact Board 3-39
Replacing the Bass Contact Board 3-39
Removing the Keyboard Contract Strips 3-40
Figure 3.14 3-40
Replacing the Keyboard Contact Strips 3-41
Removing a Key Weight 3-41
Figure 3.15 3-42
Replacing a Key Weight 3-43

Chapter 4, Troubleshooting

Introduction 4-1
Customer's Setups 4-1
Saving Setups 4-1
Surface-Mount Devices 4-2
PC88 Resets 4-2
Hard Reset 4-2
Soft Reset 4-2
Power Problems 4-3
Front Panel Problems 4-6
Audio Problems 4-9
Internal Sound Problems 4-9
Keyboard Problems 4-10
Battery 4-12
Removing/Replacing the Battery 4-12
Trimmers 4-12
Interconnect Diagram 4-13
Engine Block Diagram 4-14
Table, 37451 Microcontroller 4-15
Test Points 4-18

Chapter 5, Parts Lists

I/O Board 5-1
Main Control Panel Board 5-2
Slider Board 5-2
LCD Board 5-3
Engine Board (DIP) 5-3
Engine Board (SMD) 5-4
Wheels Assembly 5-4
Keyboard Assembly 5-5
Cables 5-5
Case/Enclosure 5-5
Hardware 5-6
Miscellaneous 5-6

Chapter 6 Schematics

I/O Board, Sheet 1 6-3
I/O Board, Sheet 2 6-4
Main Control Panel Board 6-5
Slider Board 6-6
Engine Board, Sheet 1 6-7
Engine Board, Sheet 2 6-8
Engine Board, Sheet 3 6-9
Engine Board, Sheet 4 6-10
Engine Board, Sheet 5 6-11
Engine Board, Sheet 6 6-12
VGM Board, Sheet 1 6-13
VGM Board, Sheet 2 6-14
VGM Board, Sheet 3 6-15
VGM Board, Sheet 4 6-16
VGM Board, Sheet 5 6-17
Wheels Board 6-18

Young Chang Distributors

Contact the nearest Young Chang office listed below to locate your local Young Chang/Kurzweil representative.

Young Chang America, Inc.
13336 Alondra Boulevard
Cerritos, CA 90703-2245
Tel: (310) 926-3200
Fax: (310) 404-0748

Young Chang Akki Co.
Kang Nam
P.O. Box 998
Seoul, Korea
Tel: 011-82-2-3451-3500
Fax: 011-82-2-3451-3599

Young Chang Akki Co., Ltd., Europe
Industriering 45
D-4060 Viersen 11
Germany
Tel: 011-49-2162-4491
Fax: 011-49-2162-41744

Young Chang Canada Corp.
395 Cochrane Drive
Markham, Ontario L3R 9R5
Tel: (905) 513-6240
Fax: (905) 513-9445

Specifications

Physical

•Height:	4 5/16"	(10.95 cm)
•Width:	14"	(35.6 cm)
•Length:	54 5/16"	(137.95 cm)
•Weight:	55 lbs.	(25 kg)

Electrical

	120 VAC	240 VAC
Voltage Range:	100-125 Volts RMS	200-250 Volts RMS
Frequency Range:	48-65 Hz	48-65 Hz
Input Voltage:	9.5 Volts AC	9.5 Volts AC
Power Consumption:	2.0 Amps max	2.0 Amps max

Environmental

Temperature (Operating):	40 to 104°	(5 to 40°C)
Temperature (Storage):	-13 to 185°F	(-25 to 85°C)
Relative Humidity (Operating and Storage):	5 to 95%, non-condensing	

Audio

Output Connection:	2 x 1/4" Mono Phone Plug
Impedance:	2K Ohms
Output Level:	3.5 Volts RMS Max, 1 Volt RMS Nominal
Dynamic Range:	>103 dB "A" Weighted

Chapter 1 Basic Operation

The following is a brief description of the Kurzweil PC88's Front Panel controls and Rear Panel connections. This has been prepared for the servicer of the instrument to give a general idea of basic operation. To examine the full capabilities of the Kurzweil PC88's functions, consult the PC88 Musician's Guide.

Rear Panel

The Rear Panel contains the connections for power, MIDI, audio pedals.

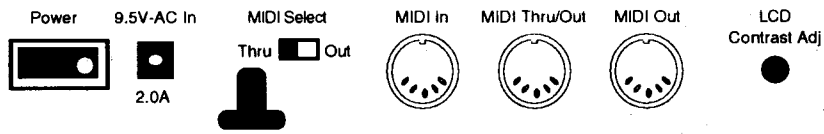

Power

The PC88 uses an external 9.5V, 2.0A ~ AC power supply. Power is turned on by pressing the rocker switch into the "on" position (white dot in). Prior to connecting the power supply, be sure the switch is in the "off" position (white dot out).

There is a strain relief mounted on the rear panel so that the wire from the power supply can be wrapped around it to prevent damage to the AC jack if the the cord is yanked. Wrap the wire once, not too tightly, around the strain relief, before inserting the plug into the socket.

MIDI

There are three MIDI jacks on the rear panel, MIDI In, MIDI Thru/Out and MIDI Out.

Use the MIDI In to receive up to 16 separate channels of MIDI data into the PC88. The PC88's MIDI Out can send up to four channels simultaneously.

The MIDI Thru/Out has two functions. To the left of the MIDI In jack there is a MIDI Select switch. The MIDI Select is a slide switch which allows you to select either MIDI Thru or Out. In the Thru position, it allows you to send data being received by the PC88 through to multiple MIDI instruments. In the Out position, it doubles as a second MIDI Out jack which allows you to hook up multiple instruments.

LCD Contrast Adjustment

Located between the MIDI and the Switch Pedal jacks is a rotary knob. Turning the knob adjusts the LCD to accommodate different playing positions.

Switch Pedals

There are two jacks on the rear panel for switch pedals. The pedals should have two-conductor 1/4" plugs. Either normally on or normally off switches can be used. They are typically used for on/off operations such as sustain, sostenuto, etc.

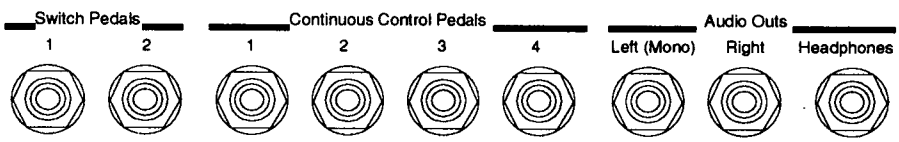

Continuous Control Pedals

There are jacks on the rear panel to connect up to four external control pedals. The pedals should have 10kΩ linear taper potentiometers with 1/4" tip/ring/sleeve plugs. They can be used for volume, stereo pan, etc.

Audio Outs

The Left and Right Audio Out jacks are 1/4", unbalanced for use with a standard instrument amplifier or mixer. Should you need to connect the PC88 to a hi-fi system, you will need cables with 1/4" plugs on one end and RCA (phono) plugs on the other. Use the Left and Right Audio Out jacks for stereo or just the Left for mono.

The headphone jack carries the same signal as the main outputs. Plugging it in does not disconnect the main outputs. Use a standard 1/4" tip/ring/sleeve configuration.

Front Panel

LCD and Cursor Buttons

The LCD window displays two lines of text and numbers. Its contrast may be adjusted to accommodate different playing positions, by turning the small black rotary knob located on the rear panel between the MIDI and the Switch Pedal jacks.

Below the LCD are the two cursor buttons, which enable you to step through the parameters within a "menu". The cursor buttons also have a "jump" feature. This is extremely helpful if you need to move through a very long menu. If you depress both buttons simultaneously, you can "jump" to a parameter some distance down the menu.

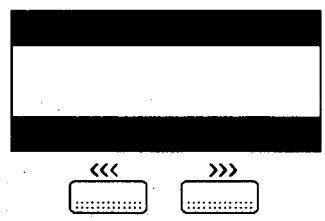

Sound/Setup Select

This section contains two groups of buttons. Four on the left and sixteen on the right.

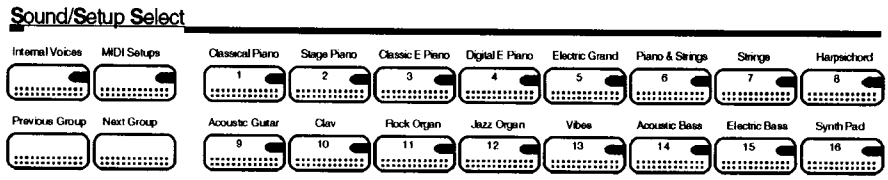

The group of four on the left are as follows: **Internal Voices, MIDI Setups, Previous Group** and **Next Group.**

The group of sixteen on the right allows you to choose from the 16 families of sounds in the **Internal Voices** mode or setups from the **MIDI Setups** mode.

Internal Voices

On power up, the PC88 is in **Internal Voices** mode. The **Internal Voices** mode has buttons labelled **1** through **16**. Pressing a different button selects a different sound. Each button has four groups of voices, A through D. The group is selected by pressing the **Previous Group** or **Next Group** buttons. The LCD displays the name of the sound, number and group preset number.

MIDI Setups

The PC88 is shipped with 32 pre-programmed MIDI Setups. If you have a PC88MX or a PC88 with the VGM option installed, there are 64 pre-programmed MIDI Setups. The PC88 can have up to 128 pre-programmed MIDI Setups altogether. Factory setups are stored in ROM and cannot be erased. Modifications are stored in RAM until deleted. If the modified setup is eventually deleted, the Factory setup is restored to its original form.

Zone Parameters

To the right of the LCD are two rows of six buttons. The top row is used to access parameters within each of the four zones for a Setup. The bottom row is used for controlling Setup parameters, global settings and memory functions. Each button in the bottom row opens up a list of parameters.

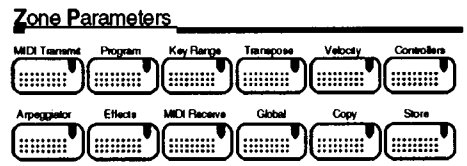

The **Global** button is especially important to servicers. Entering the **Global** menu will allow you to save the customer's setups, reset the PC88 and enter MIDIScope. It will also allow you to check the available memory and "All Notes Off" command, etc.

Zone Select and Assignable Controllers

To the left of the LCD are the four **Zone** buttons, labelled **1** through **4**. The **Zone** buttons **1** through **4** are only operative in the MIDI Setups mode. When you are in the **Internal Voices** mode, only **Zone 1** is used.

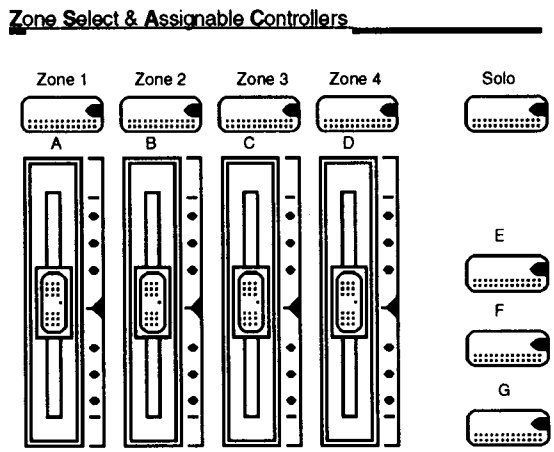

Each button has a three color LED. A green LED is lit when the zone is on or active, an orange LED when it is muted and a red LED when it is being soloed.

The **Solo** button to the right of the **Zone** buttons mutes all zones except the current one. Pressing the Solo button will turn the Zone button's LED red indicating that the zone is being soloed.

Located beneath the **Zone** buttons are four sliders labelled **A** through **D** and three buttons, labelled **E**, **F** and **G**. These sliders and buttons along with the two wheels to the left of the keyboard can all be assigned to different MIDI functions. The buttons can be designated to work as momentary as well as on/off.

The sliders, buttons and wheels are shipped from the Factory with default settings. However, they are all assignable on a per zone basis. They not only have the capability of doing different things in different setups, they may also do different things within a setup.

Data Entry

The **Data Entry** section contains the Alpha Wheel, the Decrement/Increment buttons and the Numeric Keypad.

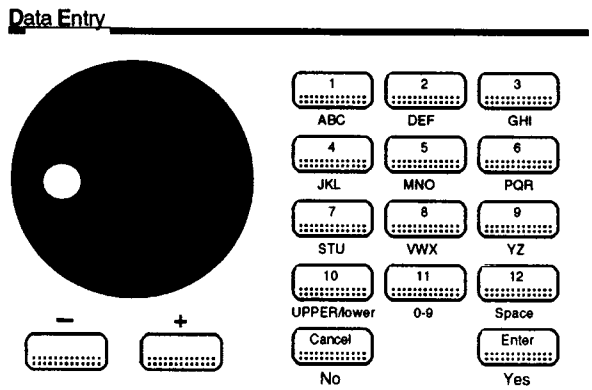

The Alpha Wheel is used to quickly move through voices and setups. In the Parameter mode, you can quickly move through parameters.

The decrement/increment buttons complement the Alpha Wheel. Once you are in the vicinity you need to be, the decrement/increment buttons allow you to make small adjustments. In Parameter mode, pressing both buttons simultaneously will bring you back to the default setting.

The Number keypad is useful when you know exactly what voice, setup or parameter you wish to choose. Simply press the numbers you want and press Enter.

The **Enter** and **Cancel** buttons also act as **Yes** and **No** for when the display asks you a question.

The +/- button is used to enter negative numbers. When entering program numbers, it is also used to add a separator between the bank and program numbers.

As you can see, the numeric keypad can also be used as an alphabetical keypad. This is used to name setups.

Master Volume

The Master Volume Slider is located at the far left end of the control panel. It controls volume for the main outputs and the headphones. The Master Volume is not programmable and and does not generate MIDI Volume commands or data.

Panic Button

The **Panic** button is located to the left of the Alpha Wheel.

Pressing the **Panic** button basically stops all sound produced by the PC88 and any other MIDI device connected to it. It also sends "All Notes Off" and "Reset All Controllers" MIDI messages on all 16 MIDI channels.

Effects

The three **Effects** buttons located beneath the **Panic** button control the following:

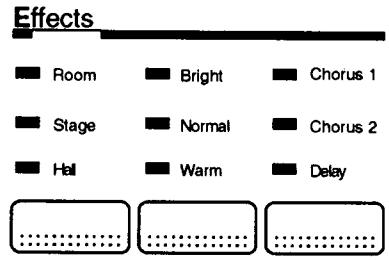

The first **Effects** button selects the type of the Reverb: **Room, Stage,** or **Hall** You will see the LED light up as you select the variations. Reverb is off, when no LEDs are lit

The second **Effects** button controls the tone of the Reverb: **Bright, Warm** or **Normal**. You will see the LED light up as you select the variations. Reverb is off when no LEDs are lit.

The third **Effects** button selects the Chorus or Delay effect: **Chorus 1, Chorus 2** or **Delay**. You will see the LED light up as you select the variations. Reverb is off when no LEDs are lit.

Chapter 2 Diagnostics

Diagnostic Tests

The following lists the sequence of tests in the PC88 Diagnostic Test Modes. These tests are available in all test modes with the exception of the Sound Mode. The VGM Port Test and Sound Test are the only tests available in Sound Mode.

CPU Test
Program ROM Test
RAM Test
NVRAM Test
MIDI UART Test
Scanner Test
Parallel I/O Test
Timer Test
Homer Test
Sound ROM Test
Marge Test
Delay RAM Test
LCD Test
VGM Port Test
Sound Test

Scanner Tests

The Scanner Tests allow you to individually check the Keyboard keys and pressure, Front Panel buttons, LEDs, sliders, and Data Wheel, Mod Wheels and Rear Panel jacks. The result of each test is noted in the LCD. The Scanner Tests begin on Page 2 - 14.

Entering Diagnostics

Important: All user setups should be saved prior to entering any diagnostic mode. If you have a sequencer or computer, you should save the customer's setups so that they can be reloaded after the Diagnostic Tests are exited. Press the **Global** button to enter the Global menu and step through the selections until you reach **Dump all Setups?** Select **Enter**.

To enter the PC88 Diagnostics, apply power to the PC88 while simultaneously holding down the **1**, **2** and **3** buttons. As soon as power is applied, ***immediately*** release the **1**, **2** and **3** buttons. Continuing to depress the buttons may cause the unit to simply sit there with a blank screen.

You should see the following in the LCD.

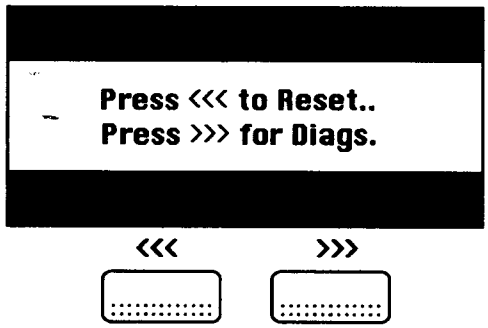

Press the **>>>** button, which will enter diagnostics.

LCD and Control Panel Buttons

In Diagnostics, the LCD displays information in three sections.

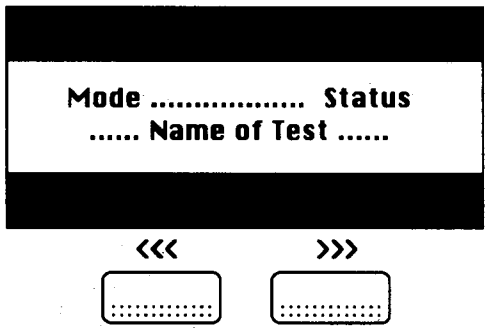

Mode - Menu, Burn-in, Debug or Sound
Status - Working, Pass, Fail
Name of Test - CPU, Program ROM, etc.

When you enter Diagnostics, you will be in Menu Mode. Press the - and + buttons to select a test. Use the **Enter** button to run a test and the **Cancel** button to abort a test.

Diagnostic Modes

Menu Mode

Selecting Menu Mode allows you to select an individual test to run. You may run the selected test once or continuously.

Press **Enter** to run the selected test once.

Press **Zone 1** to run the selected test continuously.

Press **Cancel** to stop.

Burn-in Mode

Selecting Burn-in Mode allows you to run the sequence of tests continuously. Running the diagnostics in Burn-in Mode allows you to stress-test the system.

The Sound/Setup Select button LEDs act as status indicators for the individual tests. A flashing LED indicates that the particular test has failed at least once. An LED with constant illuminated state indicates that the test has always passed.

Press **Zone 2** to enter Burn-in Mode.

Press **Cancel** to stop testing.

The LCD will display the percentage of failed iterations.

The **Sound/Setup Select** buttons numbered **1** through **15** act as the indicators for the tests. The diagnostic test and associated **Sound/Setup Select** buttons are listed as follows:

CPU Test	**Sound/Setup Select 1**
Program ROM Test	**Sound/Setup Select 2**
RAM Test	**Sound/Setup Select 3**
NVRAM Test	**Sound/Setup Select 4**
MIDI UART Test	**Sound/Setup Select 5**
Scanner Test	**Sound/Setup Select 6**
PI/O Test	**Sound/Setup Select 7**
Timer Test	**Sound/Setup Select 8**
Homer Test	**Sound/Setup Select 9**
Sound ROM Test	**Sound/Setup Select 10**
Marge Test	**Sound/Setup Select 11**
Delay RAM Test	**Sound/Setup Select 12**
LCD Test	**Sound/Setup Select 13**
VGM Port Test	**Sound/Setup Select 14**
Sound Test	**Sound/Setup Select 15**

Debug Mode

Selecting Debug Mode executes all tests in sequence. To enter Debug Mode,

Press the **Zone 3** button.

At the completion of each test, the results will be displayed in the LCD. To continue onto the next test, press any button on the Control Panel or Keyboard key.

Sound Mode

Selecting Sound Mode exercises the sound production and amplification subsystems by running the Sound test.

Warning!

Prior to running the Sound ROM and VGM Port Tests, turn the volume slider to its minimum setting. Loud tones are present during these tests which could be potentially destructive to your Sound System!

Press **Zone 4** to enter Sound Mode.

Description of Tests

CPU Test

This test performs operations that test the processor's internal registers and arithmetic/logic unit.

Failure of this test is most likely due to failure of the 68301 (U21) processor. The only other hardware elements involved are the EPROMs (U23 and U24) and associated address decoders (74LS139, U15; 74F138, U4; GAL 16V8, U11).

Program ROM Test

This test validates the program ROMs by performing a checksum of the ROM's address space.

Failure of this test indicates a failure of an EPROM (U23 or U24). The address decoders (74LS139, U15; 74F138, U4; GAL 16V8, U11) associated with the EPROMs may also be at fault.

RAM Test

The RAM Test writes to the microprocessor RAM space and verifies that the writing was successful.

Failure of this test indicates a failure of the PSRAM (U18 or U19), address decoders (74LS139, U15; 74F138, U4), or memory protection and power circuitry.

Using the **Zone 1** button to continuously repeat the test, one should be able to observe periodic changes on the address (A0-A13), data (D0-D7), and control ($\overline{WE}$, $\overline{CS1}$, *CS2*, $\overline{OE}$) lines of the RAM chips.

NVRAM Test

This test checks that the values in the microprocessor RAM are those left by the RAM test. The NVRAM Test is intended to confirm the operation the memory protection and power circuitry. In order to accomplish this, one should completely run the RAM Test, then remove power from the unit for several minutes. Turn power on while simultaneously holding buttons **1**, **2**, and **3** to re-enter diagnostics, and select the NVRAM Test.

Failure of this test indicates a failure of the memory protection and power circuitry or PSRAM.

MIDI UART Test

This test performs a loop-back test of the serial port by sending a 23-byte pattern over the external MIDI link. This test requires a MIDI loop, connect a MIDI cable between the MIDI In and MIDI Out connectors.

Failure of this test could be caused by a the failure of the serial port, other MIDI circuitry.

On the Engine Board check the following: U5, R40, R47, R46, R49, C67, C68, C69, C1.

On the I/O Board, check U1, PC910, and associated components at MIDI Connectors. Also, check the cable between I/O and Engine Board.

Note that a short between the transmit and receive lines could cause this test to pass falsely yet cause the MIDI ports to be inoperative. This is probably the case if the test passes with no MIDI loop cable installed.

Scanner Test

This test confirms scanner communications by sending data to the scanner. After processing the data, the scanner sends a result back to the main processor. If the returned value is not as expected or the scanner does not reply as expected, the test fails.

Failure of this test indicates a failure of the main processor (68301, U21), the scanner (37451, U17) or traces linking the two serial ports of these devices. There are no other components involved in the test. Note that failed scanner communications will likely disable operating the diagnostics from the control panel, since control panel signals must be read and written through the scanner.

Parallel I/O (PI/O) Test

The Parallel I/O Test writes each of two complementary bit patterns to bits 0-7 of the 68301's parallel port, verifying that the pins were able to change to the desired state.

Failure of this test could be caused by the main processor or the circuitry connected to the parallel port.

Timer Test

The Timer Test confirms the operation of the 68301's internal timers.

Failure of this test is caused by a damaged 68301.

Homer Test

The Homer Test confirms that Homer is installed properly and successfully interfacing with the microprocessor.

Failure of this test indicates a problem with Homer (U1) or the associated selection circuitry (74HCU04, U8; 19.968Mhz. Crystal, Y1).

While this test is in progress, one should see activity on Homer's write enable, P126; output enable, P125 and Data Acknowledge, P119. Also check the address (BUSA01-BUSA11) and data (BUSD00-BUSD15) pins.

Warning!

Prior to running the Sound ROM and VGM Port Tests, turn the volume slider to its minimum setting. Loud tones are present during these tests which could be potentially destructive to your Sound System!

Sound ROM Test

The Sound ROM Test confirms that Homer can successfully read the sound ROMs by performing a checksum of the Sound ROMs. Homer must be operational before this test can pass, since the processor must use Homer to read the Sound ROMs.

Failure of this test indicates a problem with Homer (see above), the Sound ROMs (U25 and U26), or the traces linking Homer and the Sound ROMs.

While looping this test, one should see periodic assertions of each Sound ROM's address, data and select ($\overline{CS}$) lines.

Marge Test

This test confirms that Marge is installed properly and successfully interfacing with the microprocessor.

Failure of this test indicates a problem with Marge (U2), associated selection circuitry (74LS164, U16) or traces linking Marge to U1 and U21.

While this test is in progress, one should see activity on Marge's chip select and write enable pins. Also check the address and data pins.

Delay RAM Test

This test writes to the entire delay RAM space and verifies that the writing was successful. Marge must be operational before this test can pass, since the processor must use Marge to access the delay RAM.

Failure of this test indicates a failure of Marge or the delay RAM (U9 and U10).

While this test loops on failure, one should see periodic activity of the RAS, CAS, and write enable pins on each DRAM chip. Also look at the address and data pins.

LCD Test

The LCD Test writes a group of characters to the LCD and verifies that the same characters can be read back again. There is a 1 second pause between the times that the characters are written and read so that the user can visually inspect the pattern.

A failure of this test indicates a problem with the LCD or the related address decoding circuitry (74LS245, U3; 74HCU04, U8).

VGM Port Test

The VGM Port Test checks for the presence of a VGM board by sending an Identity Request message. If a VGM board is installed it will send back an appropriate Identity Response message. If the expected data does not come back, the test fails (i.e. no VGM Board installed).

If a VGM board is present and operational, the test uses it to produce 5 sine waves. After each sine wave, press any button (or keyboard key) to advance to the next one. This allows the operator to take measurements before continuing with the next step.

However, in the Burn-In Mode, a 5 second delay is inserted between each tone.

The expected amplitude and frequencies are as follows:

1. 5V P-P at 55Hz.
2. 5.5V P-P at 220Hz.
3. 5V P-P at 880Hz.
4. 5.5V P-P at 1.5KHz.
5. 5V P-P at 3.52KHz.

A failure of this test indicates that:

1) VGM board is not installed,
2) the VGM Board is not properly functioning, or
3) one of the signal paths to or from the VGM connector is damaged. Note that, if the VGM send and receive lines are improperly shorted on the Engine Board, this test can pass falsely.

Sound Test

This test produces 5 sine waves. After each sine wave, press any button (or keyboard key) to advance to the next one. This allows the operator to take measurements before continuing with the next step.

However, in the Burn-In Mode, a 5 second delay is inserted between each tone. The operator does not have to press a button or key to advance to the next test.

The expected amplitude and frequencies are as follows:

1. 3V P-P at 100Hz.
2. .5V P-P at 610Hz.
3. .7V P-P at 1.173Hz.
4. 1.65V P-P at 2.354KHz.
5. .9V P-P at 5.917KHz.

This test cannot fail. All failures must be detected by the user.

Scanner Tests

The Scanner Tests allow you to individually check the Keyboard keys and pressure, Front Panel buttons, LEDs, sliders, and Data Wheel, Mod Wheels and Rear Panel jacks. The result of each test is noted in the LCD.

To enter the Scanner Tests, power up the PC88. Once power has been applied and the unit is in normal play mode, simultaneously hold down **4**, **5**, **6** buttons to enter the tests.

Upon entering the Scanner Tests, you will see the bottom row of LEDs **Internal Voices**, **9** through **16**, initially come on and off individually; then all simultaneously.

You should see the following in the LCD:

```
SCAN 2.7   W=128   B=2.9
```

Data Wheel

Slowly moving the **Data Wheel**, you should see the following in the LCD:

```
SCAN 2.7   W=128   B=2.9
SPINKNOB = 0
```

Expected results: Turning the wheel clockwise, you should expect to see the the wheel increment from 0, 1, 2, 3; and from 3, 2, 1, 0 turning the wheel counterclockwise.

Front Panel Buttons

When you press any front panel button, you should see the following in the LCD:

Examples:

Pressing the **Internal Voices, Classical Piano** button, you will see the button number and name.

```
SCAN 2.7   W=128   B=2.9
B62 SOUND SELECT 1
```

Pressing the **Zone 1** button, you will see the button number and name.

```
SCAN 2.7   W=128   B=2.9
B07 ZONE 1
```

Expected results: Pressing each front panel button, you should expect to each button's number and name. If one should fail, assume that individual switch is bad. If a section fails, please review the procedures indicated in Chapter 4, Troubleshooting, Front Panel Problems.

Front Panel Sliders

Moving a **Slider A** through **D**, you should see the following in the LCD:

At bottom:

```
SCAN 2.7   W=128   B=2.9
SLIDER A = 0
```

At center:

```
SCAN 2.7   W=128   B=2.9
SLIDER A = 128
```

At top:

```
SCAN 2.7   W=128   B=2.9
SLIDER A = 255
```

Expected results: moving the slider, you should expect to see the slider increment from 0 at bottom, 128 at center and 255 at top.

Keyboard

When you press any Keyboard key, you should see the following in the LCD:

Pressing the C4 key slightly, you will see the key number and key name.

```
SCAN 2.7   W=128   B=2.9
C4   40
```

Pressing the C4 key down completely, you will see the key number, key name, key number, key name and the pressure reading.

```
SCAN 2.7   W=128   B=2.9
C4   40   C4   40   P=4
```

Expected results:

The first key number and name is an indication that the upper key contact has closed. The second key number and key name indicates that the lower key contact has closed.

Depending on how firmly the key is depressed, the pressure reading (P = #) will vary between **P=4** to **P=248**.

Mod Wheels

Moving a **Mod Wheel**, you should see the following in the LCD: (Left Wheel, **PITCH = #** ; Right Wheel, **MOD = #**)

At bottom:

```
SCAN 2.7   W=128   B=2.9
PITCH = 0
```

At center:

```
SCAN 2.7   W=128   B=2.9
PITCH = 128
```

At top:

```
SCAN 2.7   W=128   B=2.9
PITCH = 255
```

Switch Pedal 1 and 2

When you plug in a pedal to a Switch Pedal jack, you should see the following in the LCD:

Example for Switch Pedal 1:

No pedal depression

```
SCAN 2.7   W=128   B=2.9
S. PEDAL 1 OFF
```

Pedal depressed

```
SCAN 2.7   W=128   B=2.9
S. PEDAL 1 ON
```

Continuous Control Pedals 1, 2, 3 and 4

When you plug in a pedal to any Continuous Control Pedal jack, you should see the following in the LCD:

Example for Continuous Control 1:

No pedal depression

```
SCAN 2.7   W=128   B=2.9
C. PEDAL A = 1
```

Pedal fully depressed

```
SCAN 2.7   W=128   B=2.9
C. PEDAL A = 255
```

Please note that the Continuous Control Pedals are displayed as A = 1, B = 2, C = 3 and D = 4.

Chapter 3 Disassembly/Assembly

Introduction

There have been slight variations in the manufacture of the PC88. Therefore, the following Disassembly/ Assembly instructions appear in three sections.

The first section covers the PC88 units manufactured with EMI Shields. This section describes opening the PC88 and the removal and replacement of the printed circuit boards mounted onto the Top Cover Assembly.

The second section covers the PC88 units manufactured with an Enclosure Support Wall. This section also describes opening the PC88 and the removal and replacement of the printed circuit boards mounted onto the Top Cover Assembly.

The third section covers the bottom chassis, Keyboard and Mod Wheels, and is common to both types of PC88 units.

EMI Shields/Enclosure Support Wall

Before proceeding further, you must determine whether the PC88 you are opening contains EMI Shields or an Enclosure Support Wall and follow the appropriate Disassembly/Assembly instructions.

To determine whether the PC88 you are opening contains EMI Shields or an Enclosure Support Wall, place the PC88 upside down on a soft surface. Refer to illustration below and locate the 9 Phillips head screws labelled A.

Figure 3.1

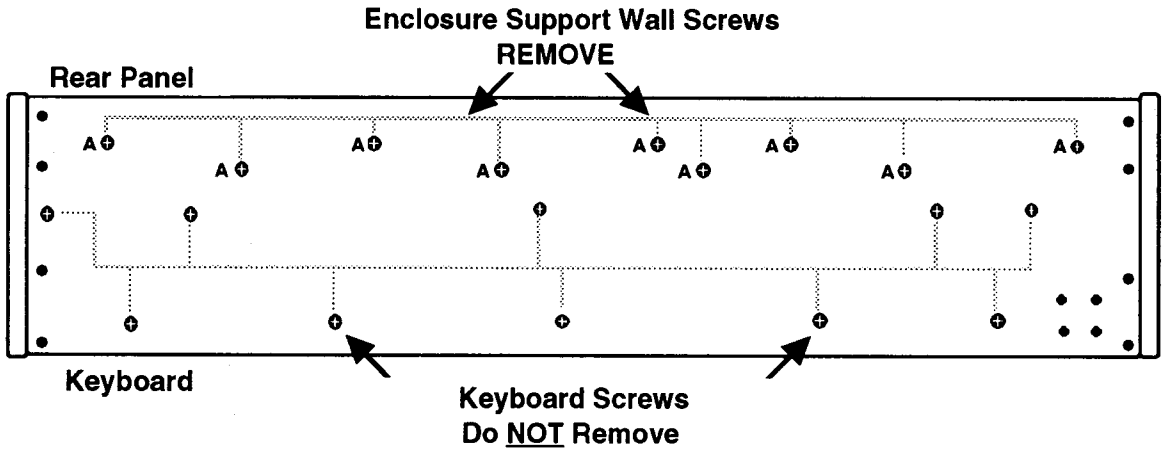

If the unit does not have screws in these locations, the unit contains EMI Shields. Please follow the Disassembly/Assembly Procedures for units containing EMI Shields. These instructions begin on page 3-4.

If the unit you are opening has screws in these locations, the unit contains an Enclosure Support Wall. Please follow the Disassembly/Assembly Procedures for units containing an Enclosure Support Wall. These instructions begin on page 3-18.

Assembly Instructions

When removing ribbon cable connectors, it has been noted throughout the Disassembly instructions to peel back clear adhesive tape securing the ribbon cable connectors. Please note that when following Assembly instructions, you should only use ribbon cable connector locking clips to secure the connectors.

If these are not available to you, they may be obtained through the Young Chang America Kurzweil Service Department. International servicers should contact their appropriate Young Chang/Kurzweil Distributor.

EMI Shields

The EMI Shields cover the printed circuit boards that are mounted directly to the top cover.

The illustration below shows the printed circuit boards mounted to the Top Cover Assembly. The placement of the corresponding EMI Shield is shown with the screws at the front panel edge removed. Refer to the illustration below for the locations to remove and install the Phillips head screws that secure the printed circuit boards and EMI Shields.

You will be asked to refer to this illustration throughout the following procedures.

Figure 3.2

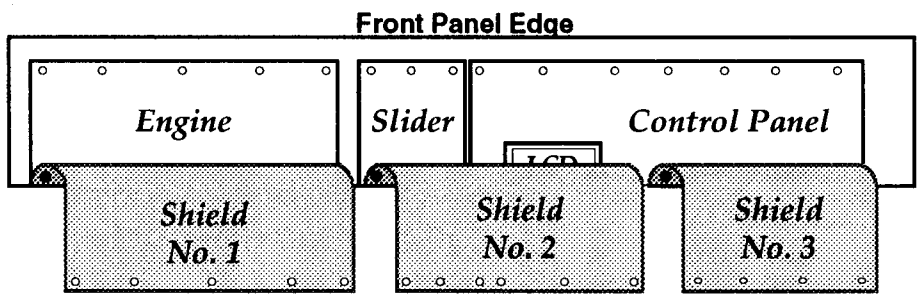

NOTE: View with I/O Board removed!

Opening the PC88

Prior to opening the PC88, remove power and all external wires and cables.

There are 9 Phillips head screws that need to be removed from the rear panel to open the unit. One screw at each end of the rear panel (where the rear panel meets the endcaps) and 7 screws along the bottom edge of the rear panel (where the top cover meets the bottom chassis).

Remove the 9 Phillips head screws on the rear panel.

Refer to the illustration below for the location of the screws.

There are 5 Phillips head screws used to secure each endcap. When opening the PC88, it is sometimes easier to loosen one endcap. The 5 Phillips head screws are located as follows: 1 at the rear of the chassis (as shown in the figure below) and 4 on the bottom of the chassis.

Figure 3.3

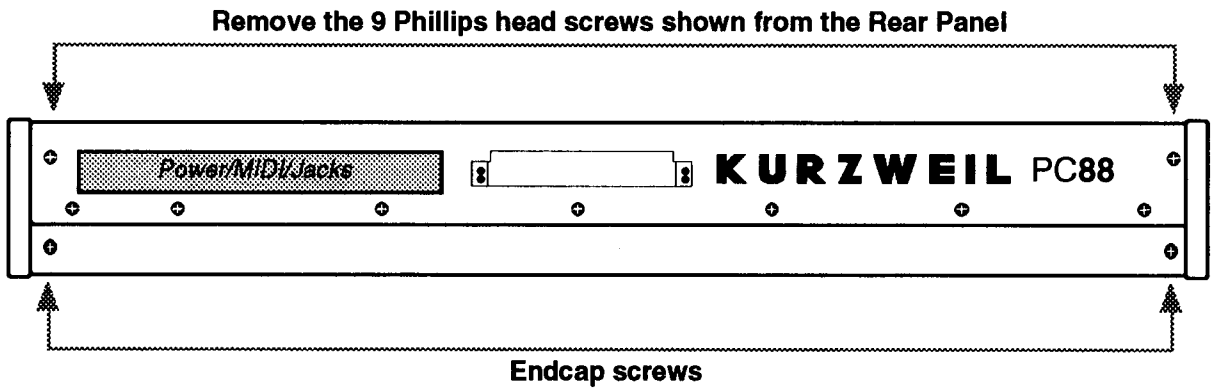

EMI Shields

Removing the Top Cover Assembly

The PC88 should be flat on your work area. Place foam or other soft protective material behind the unit (rear panel) prior to removing the Top Cover Assembly.

CAUTION!

While following these procedures, be aware that the I/O Board is mounted on the rear panel of the top cover; and that cables from the bottom of unit connect up to the Engine Board located on the Top Cover Assembly.

In addition to the screws securing the top cover, the top cover is held at both ends by metal spring fingers. Position your hands above the keyboard at each end of the top cover and gently push the top cover back, away from the keyboard. You will feel the top cover become unclipped.

The top cover will have moved back about 1/2 inch and is now free.

Figure 3.4

Top Cover Assembly - Side View

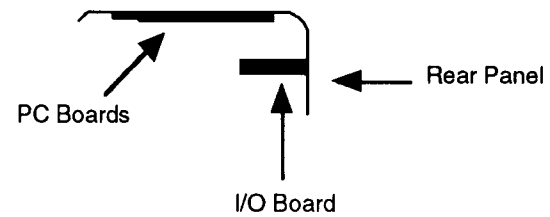

Lift the top cover up from its bottom edge (where the top cover meets the keyboard) away from the keyboard.

EMI Shields

Figure 3.5

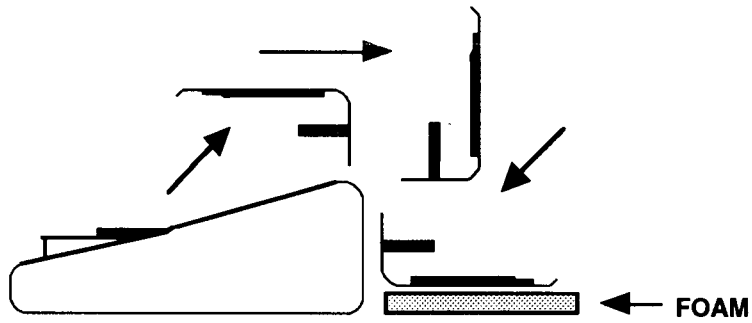

(Refer also to ***Figure 3.6*** on the following page.)

While holding the top cover securely, tilt it up and back as shown in the above illustration. Be sure to place the the top cover on a soft surface.

Disconnect the cable from J14 on the Engine Board. J14 connects the Mod Wheel Assembly to the Engine Board.

Locate the shield to the left of the top cover. Remove the 5 Phillips head screws along the rear panel edge of the shield and fold the shield back. Refer to ***Figure 3.2*** for orientation.

On the Engine Board, located to the left of the top cover, locate the flat ribbon cables at locations J5 and J6 (both at far left edge of board). J5 is the Keyboard Bass cable and J6 is the Keyboard Treble cable. The cables are secured with clear tape or a clip, simply pull the tape back or remove the clip and disconnect the cables. Feel free to make a mark on one of the keyboard cables and its associated connector so that the Bass and Treble are not reversed when reconnecting.

The top cover is now completely separate from the unit. If you are not working with any of the circuitry contained on the top cover, place if safely out of the way.

EMI Shields

Figure 3.6





Replacing the Top Cover

Place the top cover in position with the bottom of the unit. Connect the cable from the Mod Wheel Assembly to J14 on the Engine Board. The connector is keyed so it cannot be plugged in backwards.

Connect the flat ribbon cables for the Keyboard Bass and Treble to the Engine Board. Keyboard Bass cable to J5 and Treble cable to J6 on the Engine Board. Be sure to secure the cable connectors with locking clips. The red line indicates Pin 1. The connectors are keyed and Pin 1 is noted on the board.

Place the Top Cover Assembly onto the PC88 chassis about a 1/2 inch back from where it will ultimately be seated.

Caution: Be certain that the ribbon cables from the Keyboard and the cable from the Mod Wheels are free and have not been caught between the top and bottom chassis.

At this point, the Top Cover Assembly should be in the correct position so that the metal spring fingers will lock back into their brackets.

Place your hands at the back (rear panel) of the Top Cover Assembly. Pull the top cover towards the keyboard. You should feel the metal spring fingers locking into their brackets.

If the top does not lock into place, carefully slide the top back again and make sure the top cover is straight and try again. If you still have a problem, slide the top back again and carefully tilt the top up to check to see that the clips have not been bent. If they have, simply use a flat head screwdriver to slightly bend the clip out.

Replace the 9 Phillips head screws along the rear panel. Retighten the endcap screws.

EMI Shields

Removing the I/O Board

It is not necessary to remove any EMI Shield to remove the I/O Board only.

On the I/O Board, disconnect the following cables from locations: J302, J318, J301 and J306.

Remove the 10 Phillips head screws that secure the I/O Board to the rear panel. This includes the screw securing the "T" shaped strain relief used to protect the AC adaptor cable.

The I/O Board can now be removed.

You will notice the I/O Board is attached to its mounting bracket. It is not necessary to remove the board from the mounting bracket unless a repair requires you to do so.

If the repair requires you to remove a 1/4 inch jack for replacement, you need to remove the hardware securing all 1/4 inch jacks.

Should you need to remove the MIDI jacks, you will need to desolder the MIDI jacks bracket.

Replacing the I/O Board

Install the 10 Phillips head screws that secure the I/O Board to the rear panel. Remember, this includes the screw securing the "T" shaped strain relief used to protect the AC adaptor cable.

Reconnect the cables to following locations on the I/O Board: J302, J318, J301 and J306. All connectors are keyed and Pin 1 is noted on the board.*

*Pin 1 is not noted on the board at J302, however the connector cannot be installed backwards.

Removing the Control Panel/Switch Board

To remove the Control Panel/Switch Board, it is necessary to first remove the I/O Board. The following instructions assume that the you have removed the I/O Board.

Remove the Phillips head screws that secure EMI Shields No. 2 and No. 3. Refer to ***Figure 3.2***.

Remove the shields.

Clip the tie wraps used to bundle the cables together.

Disconnect the stranded wire cable at location J15 (Backlite) on the Engine Board* and fold it back towards the Control Panel/Switch Board.

Disconnect the flat ribbon cable at location J7 (LCD) on the Engine Board* and fold it back towards the Control Panel/Switch Board. The cable is secured with clear adhesive tape or a clip, simply pull the tape back or remove the clip and disconnect the cable.

EMI Shields

*Both of these cables are connected via the LCD Board to the Engine Board. It is assumed, at this point, that you are removing the Control Panel/Switch Board with the LCD Board mounted to it.

Disconnect the shielded wire cable from J102 of the Slider Board (connected to component side of Slider Board).

Disconnect the flat ribbon cable at location J11 (Panel) on the Engine Board and fold it back towards the Control Panel/Switch Board. The cable is secured with clear tape or a clip, simply pull the tape back or remove the clip and disconnect the cable.

The Control Panel/Switch Board will now lift out of the cover.

Replacing the Control Panel/Switch Board

Place the Control Panel/Switch Board in position. Be sure that all button caps are in their proper position as well.

Connect the stranded wire cable to J15 on the Engine Board.* The connector is keyed and Pin 1 is noted on the board.

Connect the flat ribbon cable at location J7 (LCD) on the Engine Board.* Be sure to secure the cable connector with a locking clip. The red line indicates the direction of Pin 1. The connector is keyed and Pin 1 is noted on the board.

Connect the stranded wire cable from J602 on the Control Panel/Switch Board to J102 on the Slider Board (connector is mounted on the component side of Slider Board). The connector is keyed and cannot be installed backwards.

Connect the flat ribbon cable from J601 on the Control Panel/Switch Board to location J11 (Panel) on the Engine Board. Be sure to secure the cable connector with a locking clip. The red line indicates the direction of Pin 1. The connector is keyed and Pin 1 is noted on the board.

*Both of these cables are connected via the LCD Board to the Engine Board. This assumes, that you are replacing the Control Panel/Switch Board with the LCD Board mounted to it.

Add tie wraps to bundle the cables together. Be certain that you have left some slack on the cables. When the tie wraps are in place, be sure that all cables are still secure to their respective connectors.

Place the shields in position.

Install the Phillips head screws that secure EMI Shields No. 2 and No. 3. Refer to ***Figure 3.2***.

Removing the LCD Board

Remove the Phillips head screws that secure EMI Shield No. 2. Refer to ***Figure 3.2***.

Remove the shield.

Clip the tie wraps used to bundle the cables together.

Disconnect the stranded wire cable at location J15 (Backlite) on the Engine Board and fold it back towards the Control Panel/Switch Board.

Disconnect the flat ribbon cable from location J7 on the Engine Board and fold it back towards the Control Panel/Switch Board.

EMI Shields

Remove the 4 Phillips head screws at each corner of the LCD board. These screws secure the LCD Board to the LCD mounting bracket mounted on the Control Panel/Switch Board.

The LCD Board can now lift out of the cover.

Replacing the LCD Board

Place the LCD Board in position.

Connect the flat ribbon cable from the LCD Board to location J7 on the Engine Board. The red line indicates the direction of Pin 1. The connector is keyed and Pin 1 is noted on the board. Be sure to secure the cable connector with a locking clip.

Connect the stranded wire cable from the LCD Board to location J15 on the Engine Board. The connector is keyed and Pin 1 is noted on the board.

Install the 4 Phillips head screws at each corner of the board.

Add tie wraps to bundle the cables together. Be certain that you have left some slack on the cables. When the tie wraps are in place, be sure that all cables are still secure to their respective connectors.

Place the shield in position.

Install the Phillips head screws that secure EMI Shield No. 2. Refer to ***Figure 3.2***.

Removing the Slider Board

Remove the Phillips head screws that secure EMI Shield No. 2. Refer to *Figure 3.2*. Remove the shield.

Clip the tie wraps used to bundle the cables together.

Carefully lift the Slider Board back towards the rear panel.

Disconnect the shielded wire cable at location J102 on the Slider Board.

Disconnect the shielded wire cable from location J12 on the Engine Board.

The Slider Board can now be removed. *Note:* It is not necessary to remove the slider caps from the front panel side.

Replacing the Slider Board

Connect the shielded wire cable to location J102 on the Slider Board. The connector is keyed and cannot be installed backwards.

Place the Slider Board into position.

Connect the shielded wire cable to location J12 on the Engine Board. The connector is keyed and Pin 1 is noted on the board.

Add tie wraps to bundle the cables together. Be certain that you have left some slack on the cables. When the tie wraps are in place, be sure that all cables are still secure to their respective connectors.

Place the shield in position. Install the Phillips head screws that secure EMI Shield No. 2. Refer to *Figure 3.2*.

EMI Shields

Removing the Engine Board

Remove the Phillips head screws that secure EMI Shield No. 1. Refer to ***Figure*** *3.2.*

Remove the shield.

Disconnect the flat ribbon cables and wire cables at the following locations: J11 (Panel), J15 (Backlite), J12 (Slider), J13 (Pedals), J9 (MIDI/Footswitch), J7 (LCD), J2 (Audio Out), and J3 (Power).

The Engine Board can now be removed.

Replacing the Engine Board

Place the Engine Board in position.

Connect the flat ribbon cables and wire cables at the following locations: J11 (Panel), J15 (Backlite), J12 (Slider), J13 (Pedals), J9 (MIDI/Footswitch), J7 (LCD), J2 (Audio Out), and J3 (Power). Be sure to secure the cable connectors with locking clips.

Place the shield in position.

Install the Phillips head screws that secure EMI Shield No. 1. Refer to ***Figure*** *3.2.*

Removing the VGM Board

The VGM Board option can be added to any PC88. The PC88MX, however, is manufactured with the VGM Board installed.

Remove the 5 Phillips head screws at the rear panel edge that secure EMI Shield No. 1. Refer to ***Figure 3.2***.

Fold the shield back.

Slightly push to the front edge the cables that cross the bracket.

Remove the bracket.

The VGM Board is connected to the Engine Board at location J1. To remove the board, carefully lift the board until it is free.

Replacing the VGM Board

Carefully slide the VGM Board under the cables that cross its path.

Position the VGM Board connector above J1. Make sure the pins at J1 on the Engine Board line up correctly with the connector on the VGM Board. Carefully insert the board into position.

Replace the bracket.

Fold the shield back into place. Install the 5 Phillips head screws at the rear panel edge.

Verify that all cables going to and from the Engine Board are still secure.

Enclosure Support Wall

Opening the PC88

Prior to opening the PC88, remove power and all external wires and cables.

Place the PC88 upside down on a soft surface. Refer to the illustration below and locate the 9 Phillips head screws indicated.

Figure 3.7

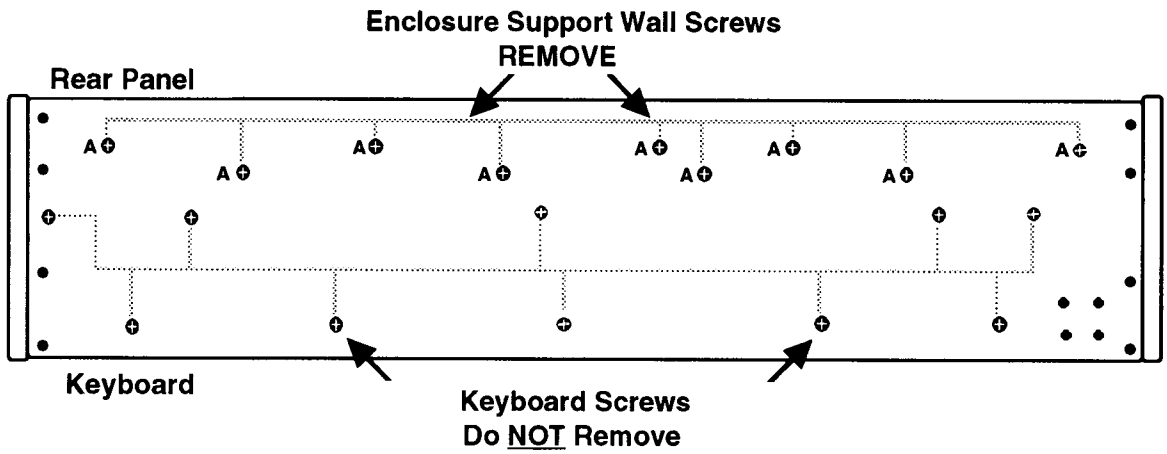

Remove the 9 screws labelled A. Turn the unit over into playing position.

Enclosure Support Wall

There are 9 Phillips head screws that need to be removed from the rear panel to open the unit. One screw at each end of the rear panel (where the rear panel meets the endcaps) and 7 screws along the bottom edge of the rear panel (where the top cover meets the bottom chassis).

Remove the 9 Phillips head screws on the rear panel.

Refer to the illustration below for the location of the screws.

There are 5 Phillips head screws used to secure each endcap. When opening the PC88, it is sometimes easier to loosen one endcap. The 5 Phillips head screws are located as follows: 1 at the rear of the chassis (as shown in the figure below) and 4 on the bottom of the chassis.

Figure 3.8

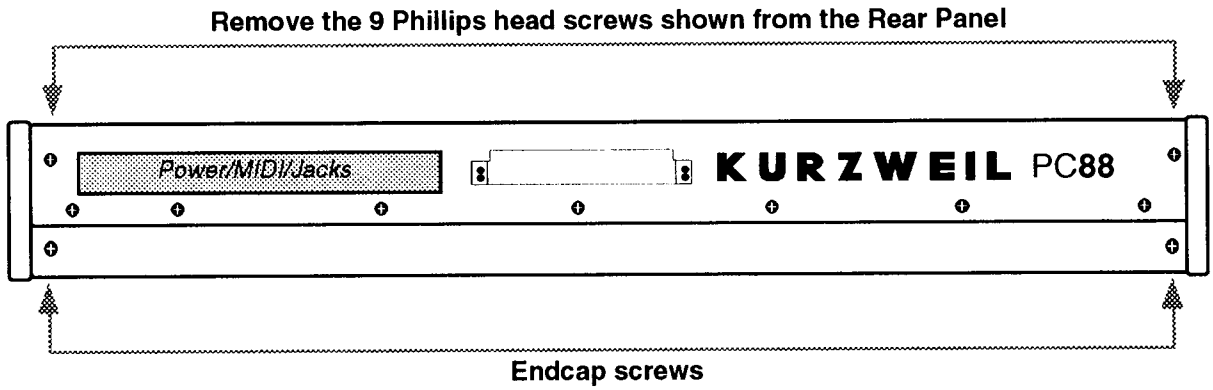

Enclosure Support Wall

Removing the Top Cover Assembly

The PC88 should be flat on your work area. Place foam or other soft protective material behind the unit (rear panel) prior to removing the Top Cover Assembly.

CAUTION!

While following these procedures, be aware that the I/O Board is mounted on the rear panel of the top cover; and that cables from the bottom of unit connect up to the Engine Board located on the Top Cover Assembly.

In addition to the screws securing the top cover, the top cover is held at both ends by metal spring fingers.

Position your hands above the keyboard at each end of the top cover and gently push the top cover back, away from the keyboard. You will feel the top cover become unclipped.

The top cover will have moved back about 1/2 inch and is now free.

Figure 3.9

Top Cover Assembly - Side View

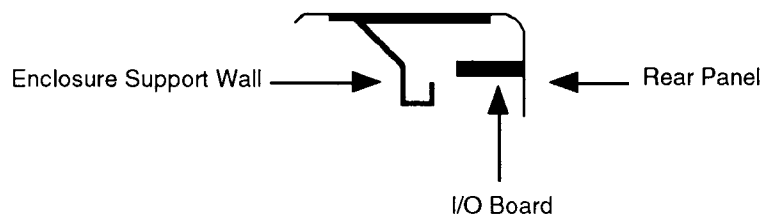

Enclosure Support Wall

Lift the top cover up from its bottom edge (where the top cover meets the keyboard) away from the keyboard.

Figure 3.10

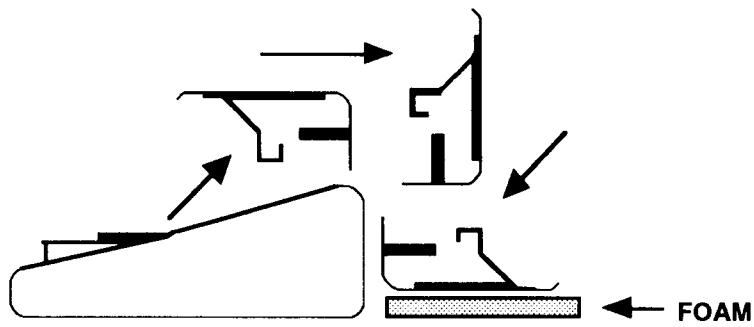

(Refer also to ***Figure 3.11*** on the following page.)

While holding the top cover securely, tilt it up and back as shown in the above illustration. Be sure to place the the top cover on a soft surface.

Disconnect the cable from J14 on the Engine Board. J14 connects the Mod Wheel Assembly to the Engine Board.

On the Engine Board, located to the left of the top cover, locate the flat ribbon cables at locations J5 and J6 (both at far left edge of board). J5 is the Keyboard Bass cable and J6 is the Keyboard Treble cable. The cables are secured with clear tape or a clip, simply pull the tape back or remove the clip and disconnect the cables. Feel free to make a mark on one of the keyboard cables and its associated connector so that the Bass and Treble are not reversed when reconnecting.

The top cover is now completely separate from the unit. If you are not working with any of the circuitry contained on the top cover, place if safely out of the way.

Enclosure Support Wall

Figure 3.11





Enclosure Support Wall

Replacing the Top Cover

Place the top cover in position with the bottom of the unit. Connect the cable from the Mod Wheel Assembly to J14 on the Engine Board. The connector is keyed so it cannot be plugged in backwards.

Connect the flat ribbon cables for the Keyboard Bass and Treble to the Engine Board. Keyboard Bass cable to J5 and Treble cable to J6 on the Engine Board. Be sure to secure the cable connectors with locking clips. The red line indicates Pin 1. The connectors are keyed and Pin 1 is noted on the board.

Place the Top Cover Assembly onto the PC88 chassis about a 1/2 inch back from where it will ultimately be seated.

Caution: Be certain that the ribbon cables from the Keyboard and the cable from the Mod Wheels are free and have not been caught between the top and bottom chassis.

At this point, the Top Cover Assembly should be in the correct position so that the metal spring fingers will lock back into their brackets.

Place your hands at the back (rear panel) of the Top Cover Assembly. Pull the top cover towards the keyboard. You should feel the clips locking into their brackets.

If the top does not lock into place, carefully slide the top back again and make sure the top cover is straight and try again. If you still have a problem, slide the top back again and carefully tilt the top up to check to see that the clips have not been bent. If they have, simply use a flat head screwdriver to slightly bend the clip out.

Replace the 9 Phillips head screws along the rear panel. Retighten the endcap screws.

Enclosure Support Wall

Removing the I/O Board

It is not necessary to remove the Enclosure Support Wall to remove the I/O Board only.

On the I/O Board, disconnect the following cables from locations: J302, J318, J301 and J306.

Remove the 10 Phillips head screws that secure the I/O Board to the rear panel. This includes the screw securing the "T" shaped strain relief used to protect the AC adaptor cable.

The I/O Board can now be removed.

You will notice the I/O Board is attached to its mounting bracket. It is not necessary to remove the board from the mounting bracket unless a repair requires you to do so.

If the repair requires you to remove a 1/4 inch jack for replacement, you need to remove the hardware securing all 1/4 inch jacks.

Should you need to remove the MIDI jacks, you will need to desolder the MIDI jacks bracket.

Replacing the I/O Board

Install the 10 Phillips head screws that secure the I/O Board to the rear panel. Remember, this includes the screw securing the "T" shaped strain relief used to protect the AC adaptor cable.

Reconnect the cables to following locations on the I/O Board: J302, J318, J301 and J306. All connectors are keyed and Pin 1 is noted on the board.*

*Pin 1 is not noted on the board at J302, however the connector cannot be installed backwards.

Removing the Control Panel/Switch Board

To remove the Control Panel/Switch Board, it is necessary to first remove the I/O Board. The following instructions assume that the you have removed the I/O Board.

Remove the 9 Phillips head screws that secure right hand side of the Enclosure Support Wall.

Remove the 6 Phillips head screws along the rear panel edge of the board.

Clip the tie wraps used to bundle the cables together.

Disconnect the stranded wire cable at location J15 (Backlite) on the Engine Board* and fold it back towards the Control Panel/Switch Board.

Disconnect the flat ribbon cable at location J7 (LCD) on the Engine Board* and fold it back towards the Control Panel/Switch Board. The cable is secured with clear adhesive tape or a clip, simply pull the tape back or remove the clip and disconnect the cable.

Enclosure Support Wall

*Both of these cables are connected via the LCD Board to the Engine Board. It is assumed, at this point, that you are removing the Control Panel/Switch Board with the LCD Board mounted to it.

Disconnect the shielded wire cable from J102 of the Slider Board (connected to component side of Slider Board).

Disconnect the flat ribbon cable at location J11 (Panel) on the Engine Board and fold it back towards the Control Panel/Switch Board. The cable is secured with clear tape or a clip, simply pull the tape back or remove the clip and disconnect the cable.

The Control Panel/Switch Board will now lift out of the cover.

Replacing the Control Panel/Switch Board

Place the Control Panel/Switch Board in position. Be sure that all button caps are in their proper position as well.

Connect the stranded wire cable to J15 on the Engine Board.* The connector is keyed and Pin 1 is noted on the board.

Connect the flat ribbon cable at location J7 (LCD) on the Engine Board.* Be sure to secure the cable with a ribbon cable connector clip. The red line indicates the direction of Pin 1. The connector is keyed and Pin 1 is noted on the board.

Connect the stranded wire cable from J602 on the Control Panel/Switch Board to J102 on the Slider Board (connector is mounted on the component side of Slider Board). The connector is keyed and cannot be installed backwards.

Connect the flat ribbon cable from J601 on the Control Panel/Switch Board to location J11 (Panel) on the Engine Board. Be sure to secure the cable connector with a locking clip. The red line indicates the direction of Pin 1. The connector is keyed and Pin 1 is noted on the board.

*Both of these cables are connected via the LCD Board to the Engine Board. This assumes, that you are replacing the Control Panel/Switch Board with the LCD Board mounted to it.

Add tie wraps to bundle the cables together. Be certain that you have left some slack on the cables. When the tie wraps are in place, be sure that all cables are still secure to their respective connectors.

Install the 6 Phillips head screws along the rear panel edge of the board.

Install the 9 Phillips head screws that secure the right side of the Enclosure Support Wall.

Removing the LCD Board

It is not necessary to remove the Enclosure Support Wall to remove the LCD Board only. However, the wall will need to be removed if you need to remove any other board.

Clip the tie wraps used to bundle the cables together.

Disconnect the stranded wire cable at location J15 (Backlite) on the Engine Board and fold it back towards the Control Panel/Switch Board.

Disconnect the flat ribbon cable from location J7 on the Engine Board and fold it back towards the Control Panel/Switch Board.

Enclosure Support Wall

Remove the 4 Phillips head screws at each corner of the LCD board. These screws secure the LCD Board to the LCD mounting bracket mounted on the Control Panel/Switch Board.

The LCD Board can now lift out of the cover.

Replacing the LCD Board

Place the LCD Board in position.

Connect the flat ribbon cable from the LCD Board to location J7 on the Engine Board. The red line indicates the direction of Pin 1. The connector is keyed and Pin 1 is noted on the board. Be sure to secure the cable connector with a locking clip.

Connect the stranded wire cable from the LCD Board to location J15 on the Engine Board. The connector is keyed and Pin 1 is noted on the board.

Install the 4 Phillips head screws at each corner of the board.

Add tie wraps to bundle the cables together. Be certain that you have left some slack on the cables. When the tie wraps are in place, be sure that all cables are still secure to their respective connectors.

Removing the Slider Board

Remove the 8 Phillips head screws the left hand side of the Enclosure Support Wall.

Remove the 3 Phillips head screws along the rear panel edge of the board.

Clip the tie wraps used to bundle the cables together.

Carefully lift the Slider Board back towards the rear panel.

Disconnect the shielded wire cable at location J102 on the Slider Board.

Disconnect the shielded wire cable from location J12 on the Engine Board.

The Slider Board can now be removed. ***Note:*** It is not necessary to remove the slider caps from the front panel side.

Replacing the Slider Board

Connect the shielded wire cable to location J102 on the Slider Board. The connector is keyed and cannot be installed backwards.

Place the Slider Board into position.

Connect the shielded wire cable to location J12 on the Engine Board. The connector is keyed and Pin 1 is noted on the board.

Add tie wraps to bundle the cables together. Be certain that you have left some slack on the cables. When the tie wraps are in place, be sure that all cables are still secure to their respective connectors.

Install the 3 Phillips head screws to the rear panel edge of the board.

Install the 8 Phillips head screws that secure the left side of the Enclosure Support Wall.

Enclosure Support Wall

Removing the Engine Board

Remove the 8 Phillips head screws that secure the left hand side of the Enclosure Support Wall.

Remove the 5 Phillips head screws along the rear edge of the board.

Disconnect the flat ribbon cables and wire cables at the following locations: J11 (Panel), J15 (Backlite), J12 (Slider), J13 (Pedals), J9 (MIDI/Footswitch), J7 (LCD), J2 (Audio Out), and J3 (Power).

The Engine Board can now be removed.

Replacing the Engine Board

Place the Engine Board in position.

Connect the flat ribbon cables and wire cables at the following locations: J11 (Panel), J15 (Backlite), J12 (Slider), J13 (Pedals), J9 (MIDI/Footswitch), J7 (LCD), J2 (Audio Out), and J3 (Power). Be sure to secure the cable connectors with a locking clips.

Install the 5 Phillips head screws along the rear edge of the board.

Install the 8 Phillips head screws that secure the left side of the Enclosure Support Wall.

Removing the VGM Board

The VGM Board option can be added to any PC88. The PC88MX, however, is manufactured with the VGM Board installed.

If you are removing the VGM Board only, it is not necessary to remove the Enclosure Support Wall. Remove the 2 Phillips head screws that secure the VGM bracket.

Slightly push to the front edge the cables that cross the bracket.

Remove the bracket.

The VGM Board is connected to the Engine Board at location J1. To remove the board, carefully lift the board until it is free.

Replacing the VGM Board

Carefully slide the VGM Board under the cables that cross its path.

Position the VGM Board connector above J1. Make sure the pins at J1 on the Engine Board line up correctly with the connector on the VGM Board. Carefully insert the board into position.

Replace the bracket.

Install the 2 Phillips head screws that secure the VGM bracket.

Removing the Wheel Assembly

This procedure assumes that the PC88 has been opened and that the Top Cover Assembly has been set safely aside.

Tilt the bottom of the unit up and remove the 2 screws closest to the rear panel that secure the Mod Wheel Assembly to the bottom chassis.

Place the unit back flat on the work area and slide the left side of the unit out over the edge of the work area so that you can remove the 2 screws closest to the front that secure the Mod Wheel Assembly to the bottom chassis.

Slide the unit back completely onto the work area.

Slowly lift the Mod Wheel Assembly and disconnect the keyboard pressure strip cables from the Mod Wheel Assembly. Disconnect the front (natural/white keys) pressure strip cable from J202 on the Mod Wheel Assembly and the pressure strip from the back (sharp/black keys) from J203 on the Mod Wheel Assembly.

It is not necessary to disconnect the cable at J201 on the Mod Wheel Assembly.

Removing the Keyboard

This procedure assumes that the PC88 has been opened and that the Top Cover Assembly has been set safely aside.

Remove the Mod Wheel Assembly prior to removing the keyboard.

Refer to the following illustration. Note the positions of the keyboard mounting screws located towards the rear of the unit. These positions differ slightly in the PC88. Therefore, the quantity of screws to remove differs. Earlier units had 3 screws securing the rear of the keyboard. The latest PC88s, including the PC88MX, have 5 and should match the illustration. Remove the screws labelled A.

Figure 3.12

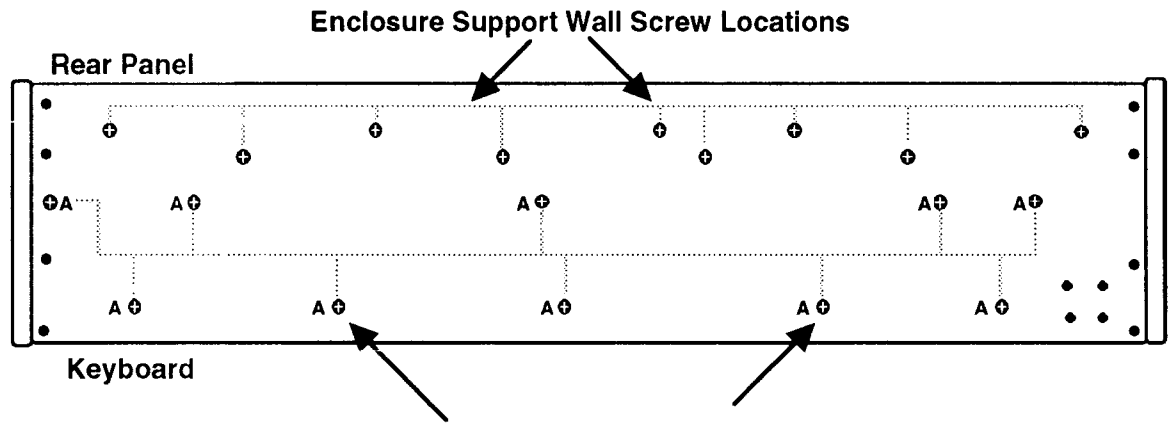

Tilt the bottom chassis up and remove the Phillips head screws located closest to the rear panel.

Place the unit back flat on the work area and slide the front edge out over the edge of the work area so that you can remove the 5 screws that secure the front edge of the keyboard to the chassis.

Slide the unit back completely onto the work area.

You will notice that the Bass and Treble ribbon cables coming from the underside of the keyboard are taped to the bottom chassis. Simply pull back the tape to free the cable. You should lay the tape flat against the bottom so that it can be reapplied to the cables once the keyboard is re-installed.

The keyboard can now be completely removed from the bottom chassis.

Removing a Key

This procedure assumes that the PC88 has been opened and that the Top Cover Assembly has been set safely aside.

Follow the instructions indicated to remove the screws securing the keyboard to the chassis.

It is not necessary to remove the keyboard from the chassis. Once the screws securing the keyboard to the chassis have been removed, simply slide the keyboard back towards the rear about a 1/2 inch.

Figure 3.13

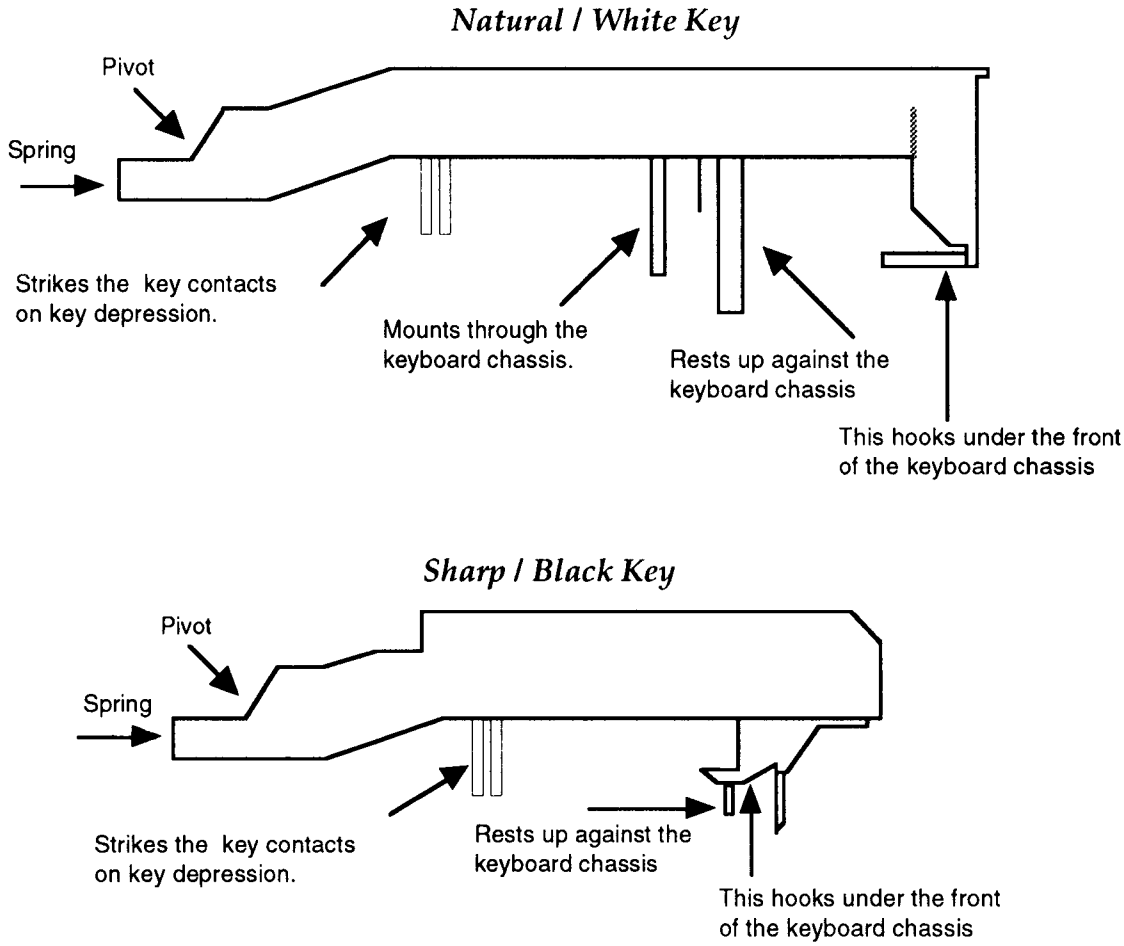

Natural/White Keys

Remove the silver key spring (located at the rear of the key). You will notice that the bottom of the spring is secured to the chassis by a hook. Using needle-nose pliers, unhook the spring by pulling the spring down slightly and releasing it from the hook.

Notice the plastic pivot piece coming through the top of the key.

To remove the key, insert a small flat screwdriver at the bottom of the pivot and press towards the front edge of the keyboard. While doing so, lift the back end of the key (where spring was positioned). This frees the key.

Remove the screwdriver.

Lift the key up slightly, then forward. You should be able to feel when the key is completely free. The front edge of each key hooks under the keyboard chassis. Be sure the the hooks are free prior to lifting the key completely off.

Sharp/Black Keys

Follow the instructions indicated to remove the keyboard.

Prior to removing a sharp key, it is necessary to remove adjacent natural keys.

Remove the gold key spring (located at the rear of the key). You will notice that the bottom of the spring is secured to the chassis by a hook. Using needle-nose pliers, unhook the spring by pulling the spring down slightly and releasing it from the hook.

Notice the plastic pivot piece coming through the top of the key.

To remove the key, insert a small flat screwdriver at the bottom of the pivot and press towards the front edge of the keyboard. While doing so, lift the back end of the key (where spring was positioned). This frees the key.

Remove the screwdriver.

Lift the key up slightly, then forward. You should be able to feel when the key is completely free. The front edge of each key hooks under the keyboard chassis. Be sure the the hooks are free prior to lifting the key completely off.

Replacing a Key

Place the key into position by hooking the front end of the key into the front edge of the keyboard chassis. Check that the mounting peg is correctly positioned.

Move the key down into a horizontal position. You should see the pivot lining up with the hole at the rear of the key.

At this point, the key should just snap into position.

Install the key spring.

Removing the Keyboard Contact Boards

This procedure assumes that the PC88 has been opened and that the Top Cover Assembly has been set safely aside.

Follow the instructions indicated to remove the keyboard from the chassis.

The keyboard should be out of the bottom chassis at this point.

Place the keyboard chassis upside down on a flat soft surface. Be sure that the keys are resting on a soft surface so that they will not be scratched or damaged.

The Keyboard Electronics spans over two printed circuit boards and are connected by a small interconnect cable.

Removing the Treble Contact Board

Remove the 26 screws that secure the board to the keyboard chassis.

Disconnect the small ribbon cable that connects the Treble to the Bass Contact Board.

The Treble Contact Board can now be removed from the keyboard chassis.

You will notice black spacer brackets mounted between the Keyboard Contact Boards and the keyboard chassis. It is not necessary to remove them. However, if you need to remove the spacer brackets, lift them horizontally. The spacer brackets mount to the chassis by small pegs that fit into position on the keyboard chassis. If you lift from one end to the other, you could easily break off one the pegs.

Replacing the Treble Contact Board

Position the Treble Contact Board on the keyboard chassis. Be sure the the Rubber Key Contacts line up properly through the holes in the keyboard chassis.

Install the 26 screws that secure the board to the keyboard chassis.

Connect the small ribbon cable that connects the Treble to the Bass Contact Board.

Removing the Bass Contact Board

Remove the 22 screws which secure the board to the keyboard chassis.

Disconnect the small ribbon cable that connects the Bass to the Treble Contact Board.

The Bass Contact Board can now be removed from the keyboard chassis.

You will notice black spacer brackets mounted between the Keyboard Contact Boards and the keyboard chassis. It is not necessary to remove them. However, if you need to remove the spacer brackets, lift them horizontally. The spacer brackets mount to the chassis by small pegs that fit into position on the keyboard chassis. If you lift from one end to the other, you could easily break off one the pegs.

Replacing the Bass Contact Board

Position the Bass Contact Board on the keyboard chassis. Be sure the the Rubber Key Contacts line up properly through the holes in the keyboard chassis.

Install the 22 screws which secure the board to the keyboard chassis.

Connect the small ribbon cable that connects the Bass to the Treble Contact Board.

Removing the Keyboard Contact Strips

This procedure assumes that the PC88 has been opened and that the Top Cover Assembly has been set safely aside.

Follow the instructions indicated to remove the Keyboard and the Keyboard Contact Boards from the chassis.

Remove a contact strip, by gently lifting and freeing the strip from its position. Be careful not to rip or damage any contacts in the process.

Before you remove a contact strip, look at the design of the individual contact. Notice that the top of the contact has two indents and the deeper indent is located to the rear of the key.

Figure 3.14

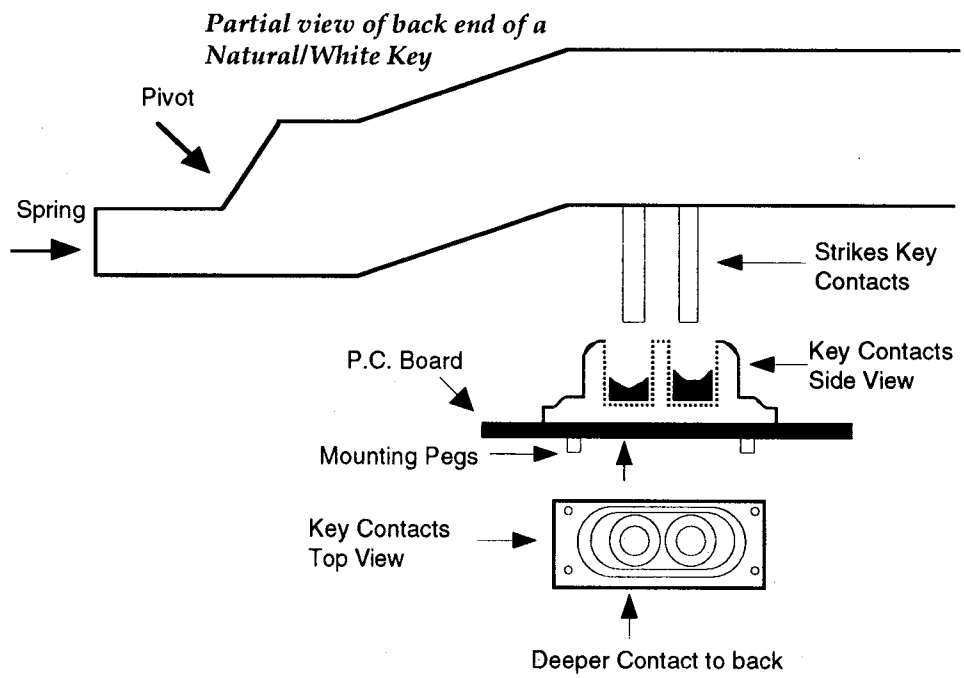

Replacing the Keyboard Contact Strips

Position the contact strip on the board. Be sure the deeper indent of the contact is located to the rear of the key.

The contacts are secured to the board by small and somewhat larger rubber pegs that are pushed through their respective mounting holes on the board.

Be sure that the rubber mounting pegs line up correctly.

Using a small blunt-end tool (i.e. Q-Tip, toothpick, etc.), gently push the mounting pegs through the holes. Be careful not to poke through the mounting pegs when installing the contract strips.

Removing a Key Weight

The PC88 keyboard key weights are attached via a rod that runs the length of the keyboard. The rod is actually two pieces. The first rod starts at low A and extends to G# above middle C. The second rod starts at A above middle C to High C. These rods will be referred to as the Bass and the Treble rod.

The natural/white and sharp/black key weights are physically different. You will notice that the sharp key weights are somewhat smaller. Be sure to install the key weights into their appropriate positions after removal.

The main components of the weighted-key action consist of the following: the keys (88 keys), two rods, key weights (88), key weight and rod support bracket (7, 12 key-position and 1, 4 key-position).

To remove a key weight, follow the instructions indicated to remove the Keyboard. Remove the keys from the section with the broken key weight.

After the keys have been removed, inspect the rod. There are two styles of rod support brackets. Some keyboards have rod support brackets with a locking clip attached to the top of the rod support bracket and others do not. You will need to determine this before proceeding further.

The following procedures describe removing key weights from both styles of keyboards. Follow the instructions and illustration labelled "A" for keyboard without locking clips and follow the instructions and illustration labelled "B" for keyboards with locking clips.

Figure 3.15

Side View of Support Brackets

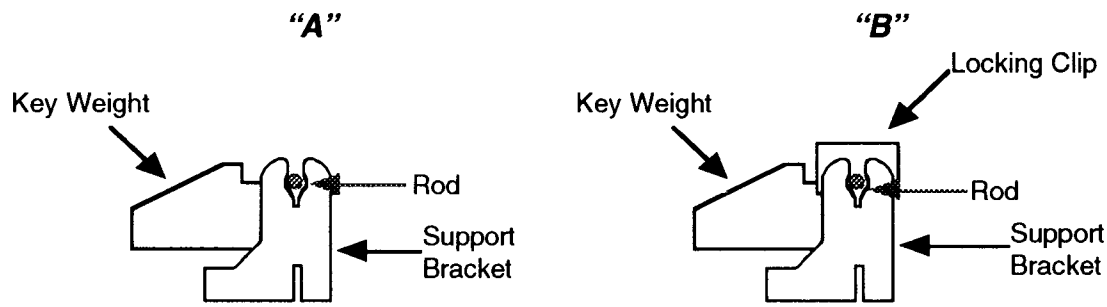

A. If you are removing a key weight from a keyboard that does not have rod support locking clips, you will need to pry the rod up out of the support bracket at one end. Be aware that the key weights will stay attached to the rod.

   Once the rod is released, you can simply pull off the key weight that needs to be replaced.

B. *Note:* all keys in this section must be removed before proceeding further. If you are removing a key weight from a keyboard that does have rod support locking clips, you will need to slide the rod out from the end of the keyboard. (The locking clips are positioned every twelve keys positions and are ***not*** removable.)

Removing the rod releases every key weight in this section.

Once the rod has been removed, simply remove the key weight that needs to be replaced.

Replacing a Key Weight

The following procedures describe replacing key weights from both styles of keyboards. Follow the instructions labelled "A" for keyboard without locking clips and follow the instructions labelled "B" for keyboards with locking clips.

A. Each key weight has a strip of red felt attached to the key weight with pliable adhesive. Be sure the red felt extends onto the upper surface of the top of the key weight.

Place the key weight against the rod and snap onto the rod with slight pressure.

Place the rod and key weights into position over the support brackets and snap the rod into the support brackets. Be certain that the rod is pressed securely into the support bracket.

Prior to installing the keys and springs, check that each key weight moves freely.

B. Place the new key weight into position.

You will need to file the end of the rod so that it is smooth and can be inserted through the key weights. Work the filed end of the rod through the key weights. Turning the rod makes this process easier.

Each key weight has a strip of red felt attached to the key weight with pliable adhesive. Be sure the red felt extends onto the upper surface of the top of the key weight. Be careful that when the rod is inserted, it does not "bunch up" the red felt.

Prior to installing the keys and springs, check that each key weight moves freely.

Chapter 4 Troubleshooting

Introduction

Prior to performing basic troubleshooting and opening up the PC88, verify the customer's complaint. Be sure that there is no chance of operator error. If necessary, reset the PC88 (save setups first) to return the unit to Factory defaults. Verify that the problem still exists.

Customer's Setups

It is always a good practice to save the customer's setups prior to performing a repair. If you have a sequencer or computer, you should save the customer's setups so that they can be reloaded. Remember that entering the Diagnostic Tests clears all customer setups.

If you do not have the means to save the customer's setups, please inform the customer. In some instances, the customer may have already saved the setups.

Saving Setups

To save the customer setups, use a computer or sequencer to perform a Sysex dump. Press the **Global** button to enter the **Global** menu and step through the selections until you reach **Dump all Setups?** Select **Enter**. Reload the data when the repair is complete.

Surface-Mount Devices

The PC88 contains surface-mount devices. The removal and replacement of these devices should only be executed by individuals with training and experience along with the proper equipment. If you do not possess the experience or the equipment necessary to undertake this type of repair, contact the Kurzweil Service Department at Young Chang for a board replacement. International servicers should contact their appropriate Young Chang/Kurzweil Distributor.

PC88 Resets

Hard Reset

You can perform a hard reset to the PC88 two ways.

1. Press the **Global** button to enter the **Global** menu and step through the selections until you reach **Reset PC88?** Select **Enter**. The display will ask "**Are you Sure?**". Press **Enter** and the PC88 will return to Factory defaults.

2. Enter Diagnostics. Apply power to the PC88 while simultaneously holding down the **1**, **2** and **3** buttons. As soon as power is applied, ***immediately*** release the **1**, **2** and **3** buttons. Continuing to depress the buttons may cause the unit to simply sit there with a blank screen.

   Press the **<<<** button located below the LCD. The PC88 will return to Factory defaults.

Soft Reset

The Soft Reset will not clear the customer's setups; it is equivalent to turning the power on and off. In the numeric keypad, press **+/-**, **0** and **Clear** buttons simultaneously.

Power Problems

On power up no Audio, LEDs or LCD.

AC Adaptor

1. Check that the AC adaptor is properly connected to the unit and a power source.

2. Set the DVM for AC, 20 Volts. With a DVM and the AC adaptor plugged into an AC socket, check to see that you are reading approximately 10 Volts AC at the jack.

3. If not, disconnect the AC adaptor from the AC socket. Remove the 4 screws on the prong side of the adaptor and check the fuse.

   If the fuse is bad, replace it with a 5A, 250V Slo-Blo, Pigtail.

4. If the fuse is not the problem, order a new AC adaptor. Kurzweil Part Number, D52001000.

Note: Any reference to pins of devices, assume that the PC88 Top Cover is in the service position; face down, rear panel edge towards you.

AC Receptacle

1. With the unit open, connect the AC adaptor to the unit. Be sure the power switch is in the "off" position and the AC adaptor is plugged into the AC outlet.

2. Set the DVM for AC, 20 Volts. Place one probe at the center contact of the AC receptacle, J305. Place the second probe on the bridge rectifier, D14, third pin from the right. You should read 10 Volts or greater.

3. The AC receptacle is functional.

Power Switch

1. To check the power switch, turn the power switch to the "off" position.

2. Place one probe at the center contact of AC receptacle and the second probe at the second pin from the right of the bridge rectifier, D14. You should read in excess of 9 Volts.

3 Turn the power switch to the "on" position. Measuring the same points, you should read approximately 0 Volts.

4. The power switch is functional.

Power Supply Voltage Regulators

1. Disconnect the power cable, PC-1, at Location J302.

2. Set a DVM to DC, 20 Volts. With negative probe to ground, check VR1 (+5VMASS), first pin to the right you should read approximately 5 Volts. Perform the same for VR2 (+5VDIG) and for VR3 (+5VANA).

3. If any measure low, perform the same as above on the third pin from the right. You should read 10 Volts or excess on all three.

4. If any read low, connect an oscilloscope to that pin and see if you have excessive AC ripple, which would indicate a bad input smoothing cap, C28 or a bad bridge rectifier, D14 (open).

5. If the DC value is 10 Volts or greater and the output is still low, but there is no excessive heating on VR1, VR2 or VR3; replace VR1 and/or VR2.

6. For VR3 check C8 for a short or low resistance reading. If it is short or low, replace C8. If C8 measures correctly, replace VR3.

7. If there is excessive heating of VR1, VR2 or VR3 with J302 removed, then replace VR1, VR2 and/or VR3.

8. At VR4 (-5VANA) check the third pin from the right for -5 Volts. Check the second pin from the right for approximately -10 Volts. Repeat previous test (filter cap for VR4 is C34).

9. If the reading on the second pin from the right is zero or very low, the fault may lie within the oscillator circuit comprising of U4, Q1, Q2 and/or associated components.

   Look for a sine wave on U4, Pin 1 and a half sine wave on Q1 and Q2 base.

10. If everything measures correctly, reconnect J302 and check the output voltages at VR1, VR2, VR3 and VR4. If any line is found to be low, shut power off and trace the excessive low to the appropriate DC power line.

11. Refer to Schematic Diagrams. Trace power circuit. Check for correct voltages in signal path.

12. Find and replace bad component(s).

13. If necessary, order circuit board replacement.

Front Panel Problems

On power up, the PC88 should come up in the **Internal Voices** mode with **Classical Piano** selected and have the following LEDs lit:

Zone 1, green LED
Internal Voices, green LED
Classical Piano, red LED
Effects Stage and **Bright**, red LEDs

LCD not lit, no characters displayed, LEDs are lit

Is there audio and does the keyboard respond? If yes, then:

1. Check LCD contrast adjustment located on the rear panel. Turn the pot back and forth to see if there is any change.

2. Check the ribbon cable from the LCD Board to J7 on the Engine Board. If necessary, disconnect and reseat.

3. Check the cable from the LCD Board to J15 on the Engine Board. If necessary, disconnect and reseat.

4. Check solder connections.

5. Refer to Schematic Diagrams. Check for correct voltages in signal path.

6. Find and replace bad component(s).

7. If necessary, order circuit board replacement.

LCD wavers, cannot change sound

1. Try selecting another sound in the **Sound/Setup Select** section. If the unit plays another sound but skips quickly back to the **Classical Piano** sound, chances are a control panel button is stuck. In this instance, you may also see two LEDs that are not normally lit, lit at that same time; i.e., **Classical Piano** and **Stage Piano**.

2. Remove the Control Panel Board. Check the switches and caps. Check solder connections.

3. Reinstall board and check for proper operation.

4. Refer to Schematic Diagrams. Check for correct voltages in signal path.

5. Find and replace bad component(s).

6. If necessary, order circuit board replacement.

LCD dim/not lit: Characters are present and LEDs are lit

1. Check LCD contrast adjustment located on the rear panel. Turn the pot back and forth to see if there is any change.

2. Check LCD backlite cable at J15 and LCD ribbon cable at J7 on the Engine Board.

3. Check backlite solder connections on the LCD Board.

5. Check solder connections on the Engine Board.

6. Refer to Schematic Diagrams. Check for correct voltages in signal path.

7. Find and replace bad component(s).

8. If necessary, order circuit board replacement.

Sliders, Groups of Switches, Wheels or Controllers not functioning.

1. Refer to the Interconnect Diagram.
2. Check all cable and solder connections.
3. Run the Scanner Tests. With the power on, simultaneously hold down **4**, **5** and **6** buttons to enter the tests.
4. Refer to Schematic Diagrams. Check signal path for section not functioning.
5. Find and replace bad component(s).
6. If necessary, order circuit board replacement.

Audio Problems

No Audio, Distortion/Crackling on Output(s)

1. Check the wire cable at J306 on the I/O Board.
2. Check the wire cable at J2 on the Engine Board.
3. Check solder connections.
4. Refer to Schematic Diagrams.
5. Check signal activity at DAC, AD1865, U7 on the Engine Board.
6. Trace audio signal path.
7. Find and replace bad component(s).
8. Diagnose to board. If necessary, order circuit board replacement.

Internal Sound Problems

1. Eliminate possibility of Audio problems.
2. Run Diagnostic Tests to check for failures.
3. If all tests pass, refer to the Schematic Diagrams and check signal paths.
4. Find and replace bad component(s).
5. If necessary, order circuit board replacement.

Keyboard Problems

Keyboard Dead

1. Eliminate loose cables. Check cable connections to the Engine Board and Contact Boards.

2. Refer to the Schematic Diagrams and check the keyboard signals at U17 on the Engine Board.

3. Trace signal path.

4. Find and replace bad component(s).

5. If necessary, order an Engine Board replacement.

Treble or Bass Section Not Playing

1. On the Engine Board, Location J6 for Treble or J5 for Bass, check the flat ribbon. Be sure it is properly seated. Disconnect and reseat, if necessary.

2. Check to see it the Treble or Bass Section is now working. If not, swap the Treble and Bass ribbon cables. See if the problem moves with the cable. If it does, remove the keyboard and check the connections, cable and keyboard section associated with the problem.

   If the problem does not move with the cable, proceed to point 3.

3. Refer to the Engine Board Schematic. Check components tied to J6, Treble or J5, Bass for activity.

4. Find and replace bad component(s).

5. If necessary, order circuit board replacement.

A section of notes dead

1. Remove the Contact Board that relates to the missing section of notes.

2. Check contacts for dirt, damage or wearing. If dirty, remove debris, clean with denatured alcohol and reinstall. Replace contact strip if damaged or worn.

3. If problem persists, remove strip and check board for shorts, cold solder joints or open diodes.

4. If necessary, order circuit board replacement.

Middle C Dead

1. Check small interconnect cable that connects the Bass and Treble boards. If this cable is disconnected from either the Treble or Bass Contact Boards, Middle C will not sound. However, all other notes should play normally.

2. Disconnect and reseat it, if necessary.

3. Check solder connections.

4. If Middle C is still dead, remove the Treble Contact Board.

5. Check the contact strip. Make sure the contact is seated properly, clean and clear of any foreign matter on both sides of the strip.

Battery

A low-voltage battery alert will appear in the LCD on power up.

The battery should be changed if it reads below 2.4 Volts. It is located on the I/O Board. The battery is a 3 Volt Lithium flat disc, CR2032.

If you encounter other problems, refer to the Schematic Diagrams and check circuit.

Removing/Replacing the Battery

To remove/replace the battery, ease the battery out away the holder and pull upwards.

When replacing the new battery, ensure the positive terminal is facing the rear panel edge. Simply insert battery into the holder and push down until it clicks into place.

Trimmers

There are three trimpots located on the Wheels Assembly. The first trimpot, R3, is for the wheels "Center" and is set. The other two, R13 and R15, are for "Range" and "Offset". You can access the trimpots through holes located below the Wheels Assembly underneath the bottom chassis.

The trimmers should be adjusted using the Scanner Tests. Please refer to Chapter 2, Diagnostics, Mod Wheels, Page 2 - 17.

Interconnect Diagram

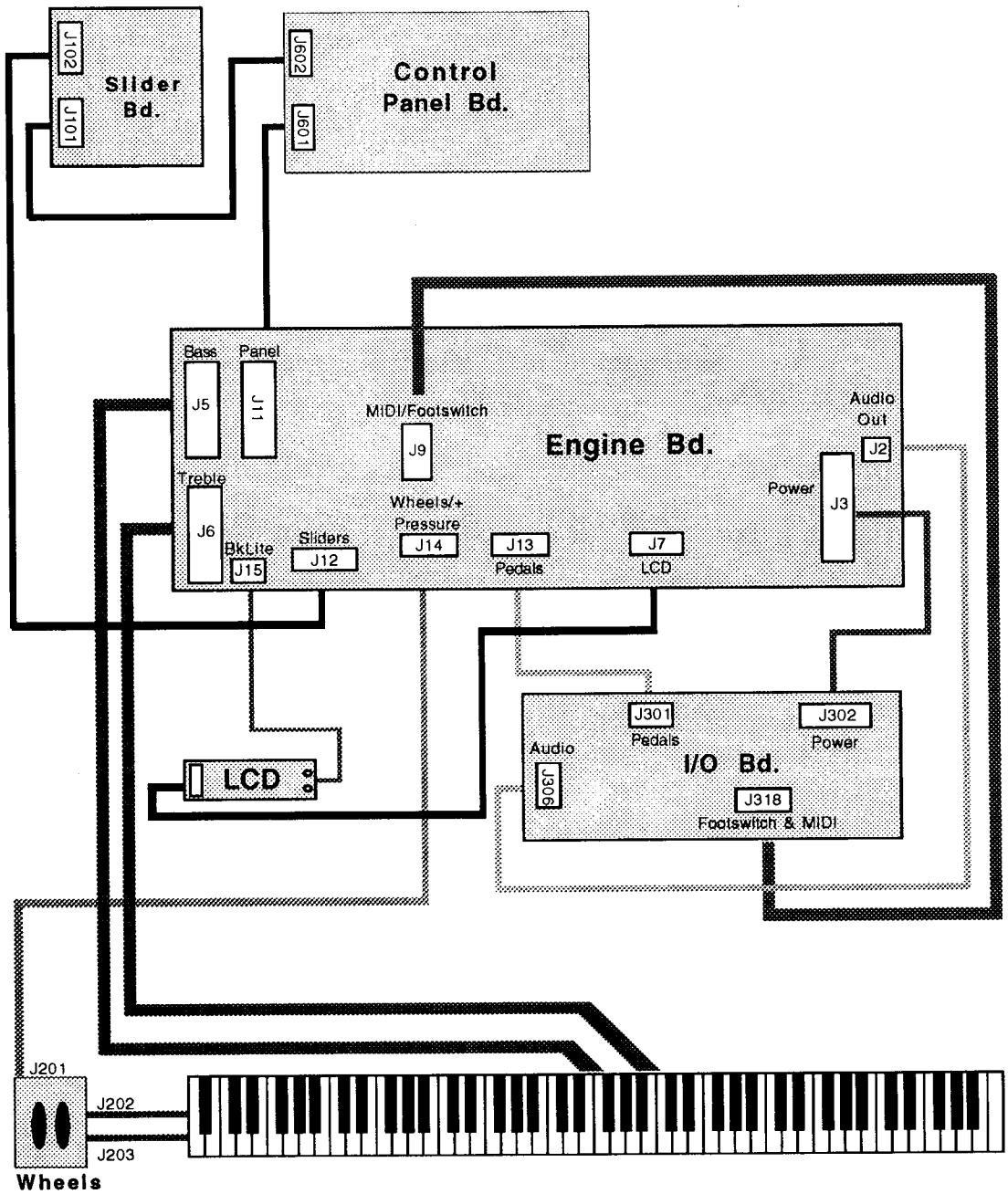

Engine Block Diagram

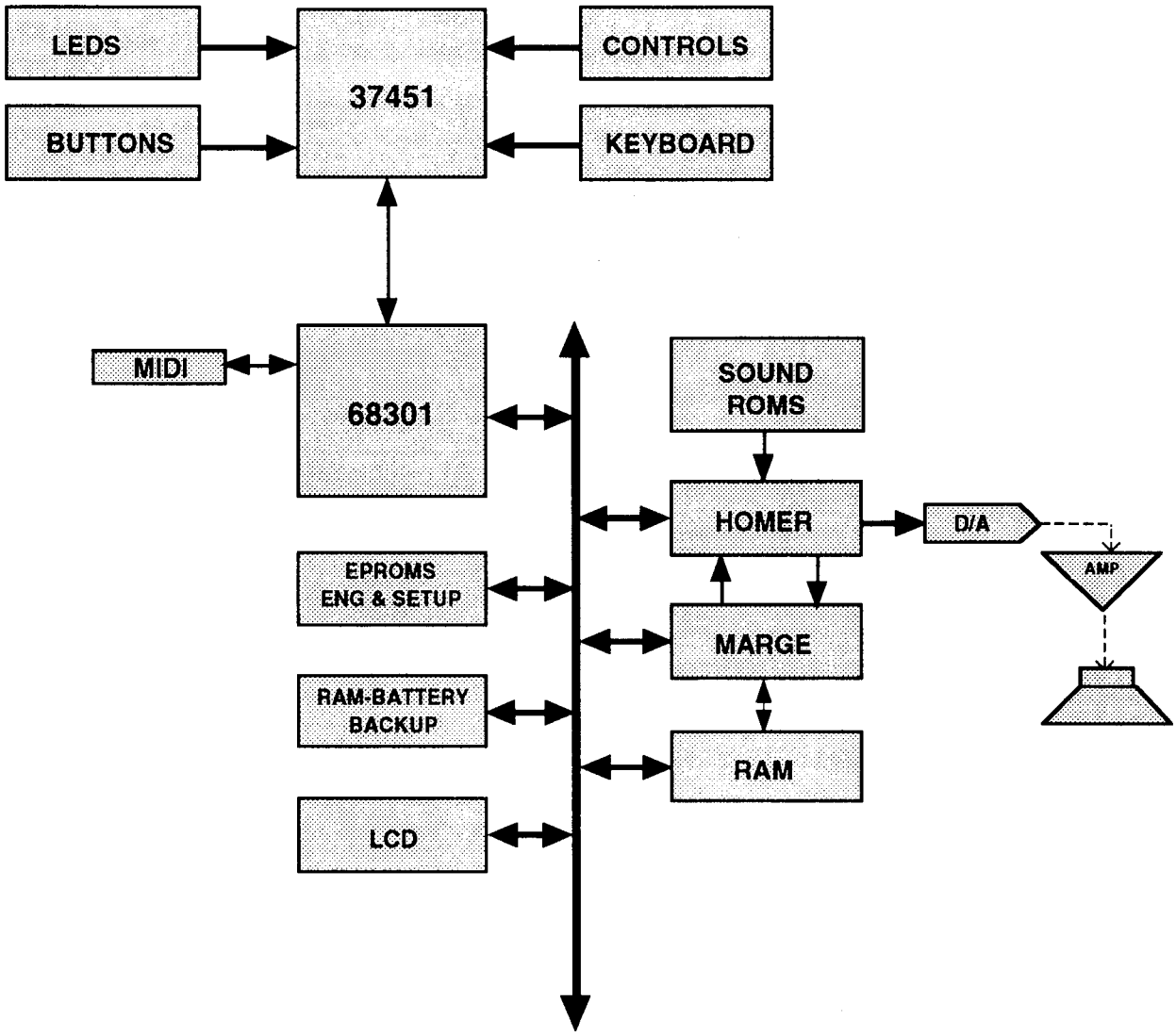

37451 Microcontroller, U17 Engine Board

Following is a table of the signals processed by the 37451 Microcontroller.

Analog Inputs

Signal	*KBDuC Pin No.*	*Comments*
AIN0	65	Left-Hand Slider
AIN1	64	Left, Center Slider
AIN2	63	Right, Center Slider
AIN3	62	Right-Hand Slider
AIN4	61	Pitch Wheel
AIN5	60	Mod Wheel
AIN6	59	Mono Pressure Strip
AIN7	58	External MUX

External MUX

Signal	*CD4051 Pin No.*	*Comments*
IN0	13	Battery
IN1	14	Encoder Select
IN2	15	Reserved
IN3	12	Reserved
IN4	1	Pedal 1
IN5	5	Pedal 2
IN6	2	Pedal 3
IN7	4	Pedal 4

External MUX Control

Signal	*KBDuC Pin No.*	*Comments*
P57/SLD7	4	Select Bit 2
P15/A13	44	Select Bit 1
P14/A12	45	Select Bit 0

Panel Inputs/Outputs

Signal	*KBDuC Pin No.*	*Comments*
P51/SLD1	10	Front Panel Sense Output, active low
P50/SLD0	11	Front Panel Drive Output, active low
P13/A11	46	Control Panel Column "D"
P12/A10	47	Control Panel Column "C"
P11/A09	48	Control Panel Column "B"
P10/A08	49	Control Panel Column "A"
P67	12	Control Panel Column "7"
P66	13	Control Panel Column "6"
P65	14	Control Panel Column "5"
P64	15	Control Panel Column "4"
P63	16	Control Panel Column "3"
P62/INT3	17	Control Panel Column "2"
P61/INT2	18	Control Panel Column "1"
P60/INT1	19	Control Panel Column "0"
P37	74	Encoder "Phase A"
P36	75	Encoder "Phase B"

Keyboard Inputs

Signal	*KBDuC Pin No.*	*Comments*
P55/SLD5	6	Keyboard Break "5"
P53/SLD3	8	Keyboard Break "4"
P27/D7	33	Keyboard Break "3"
P25/D5	35	Keyboard Break "2"
P23/D3	37	Keyboard Break "1"
P21/DIP36	39	Keyboard Break "0"
P55/SLD5	7	Keyboard Make "5"
P53/SLD3	9	Keyboard Make "4"
P26/D6	34	Keyboard Make "3"
P24/D4	36	Keyboard Make "2"
P22/D2	38	Keyboard Make "1"
P20/D0	40	Keyboard Make "0"
P[07:00]/ A[7:0]	50, 51, 52, 53, 54, 55, 56, 57	Treble Row "7" to "0"
P67	12	Bass Row "7"
P66	13	Bass Row "6"
P65	14	Bass Row "5"
P64	15	Bass Row "4"
P63	16	Bass Row "3"
P62/INT3	17	Bass Row "2"
P61/INT2	18	Bass Row "1"
P60/INT0	19	Bass Row "0"

Debug Port

Signal	*KBDuC Pin No.*	*Comments*
P33/PWM	78	Transmit Data
P32/EV3	79	Interrupt Request
P31/EV2	2	Receive Data

Interprocessor Communications

Signal	*KBDuC Pin No.*	*Comments*
P35/TxD	76	Internal MIDI Transmit Data
P34/RxD	77	Internal MIDI Receive Data
P30/EV1	3	Alert Line from 68301
P56/SLD6	5	Alert Line to 68301

Test Points

Test Point	*Name*	*Location*	*Schematic Location*	*Activity*
All Test Points will be found on the Engine Board schematics, sheets 1 through 6.				
TP1	OSC20*	P8, U8	C7, Sht. 4 of 6	Clock, 19.968 MHz, approx. .05µs
TP4	OSC16	P2, U5	G1, Sht. 2 of 6	Clock, 16.000MHz, .0625µs
TP6	_CLK16	P12, U5	H1, Sht. 2 of 6	Clock, 16.000MHz, .0625µs
TP10	NVRAMCSb	P3, Q1	G5, Sht 3 of 6	5 Volts
TP11	PWRUPRSTINb	P1, Q1	G5, Sht. 3 of 6	5 Volts
TP14	INTMIDITxD	P27, U21	L5, Sht. 2 of 6	5 Volts
TP15	INTMIDIRxD	P31, U21	L5, Sht. 2 of 6	5 Volts
TP20	RESETb	P4, U20	J8, Sht. 2 of 6	5 Volts
TP21	RESET	P10,U20	E7, Sht. 2 of 6	0 Volts
TP28	_IEXTMIDIRxD	P32, U21	I6, Sht. 2 of 6	5 Volts
TP29	_EXTMIDITHRU	P8, U5	K7, Sht. 2 of 6	5 Volts
TP30	_EXTMIDITxD	P6, U5	K6, Sht. 2 of 6	5 Volts
TP31	IBR0	P39, U17	H1, Sht. 1 of 6	High, low pulse 6.5µs wide every .25ms
TP32	IBR1	P37, U17	H1, Sht. 1 of 6	High, low pulse 6.5µs wide every .25ms
TP33	IBR2	P35, U17	H1, Sht. 1 of 6	High, low pulse 15µs every .25ms
TP34	IBR3	P33, U17	H1, Sht. 1 of 6	High, low pulse 6.5µs every .25ms
TP35	IBR4	P8, U17	H1, Sht. 1 of 6	High, low pulse 6.5µs every .25ms
TP36	IBR5	P6, U17	H1, Sht. 1 of 6	High, low pulse 4 µs every .25ms
TP37	IBT0	P19, U17	H1, Sht. 1 of 6	High, low pulse .12ms wide every 1.2ms
TP38	IBT1	P18, U17	H1, Sht. 1 of 6	High, low pulse .12ms wide every 1.2ms
TP39	IBT2	P17, U17	H1, Sht. 1 of 6	High, low pulse .12ms wide every 1.2ms
TP40	IBT3	P16, U17	H1, Sht. 1 of 6	High, low pulse .12ms wide every 1.2ms
TP41	IBT4	P15, U17	H1, Sht. 1 of 6	High, low pulse .12ms wide every 1.2ms
TP42	IBT5	P14, U17	H1, Sht. 1 of 6	High, low pulse .12ms wide every 1.2ms
TP43	IBT6	P13, U17	H1, Sht. 1 of 6	High, low pulse .12ms wide every 1.2ms
TP44	IBT7	P12, U17	H1, Sht. 1 of 6	High, low pulse .12ms wide every 1.2ms
TP45	IMK0	P40, U17	G1, Sht. 1 of 6	High, low pulse 6.5µs wide every .25ms
TP46	IMK1	P38, U17	G1, Sht. 1 of 6	High, low pulse 6.5µs wide every .25ms
TP47	IMK2	P36, U17	G1, Sht. 1 of 6	High, low pulse 6.5µs wide every .25ms
TP48	IMK3	P34, U17	G1, Sht. 1 of 6	High, low pulse 6.5µs wide every .25 ms
TP49	IMK4	P9, U17	G1, Sht. 1 of 6	High, low pulse 6.5µs wide every .25ms
TP50	IMK5	P7, U17	G1, Sht. 1 of 6	High, low pulse 4µs wide every .25ms
TP51	ITT0	P57, U17	G1, Sht. 1 of 6	5 Volts
TP52	ITT1	P56, U17	G1, Sht. 1 of 6	5 Volts
TP53	ITT2	P55, U17	G1, Sht. 1 of 6	5 Volts

Test Point	*Name*	*Location*	*Schematic Location*	*Activity*
TP54	ITT3	P54, U17	G1, Sht. 1 of 6	5 Volts
TP55	ITT4	P53, U17	G1, Sht. 1 of 6	5 Volts
TP56	ITT5	P52, U17	G1, Sht. 1 of 6	5 Volts
TP57	ITT6	P51, U17	G1, Sht. 1 of 6	5 Volts
TP58	ITT7	P50, U17	G1, Sht. 1 of 6	5 Volts
TP59	MUTE	P11, U8	K4, Sht. 2 of 6	0 Volts
TP60	EXTMIDITxDb	P5, U5	J6, Sht. 2 of 6	0 Volts
TP61	EXTMIDITHRUb	P9, U5	J7, Sht. 2 of 6	0 Volts
TP74	EXTIRQb, 1 - J2	P47, U21	K5, Sht. 2 of 6	5 Volts
TP75	U21PU43	P37, U21	I3, Sht. 2 of 6	5 Volts
TP76	U21PU42	P38, U21	J3, Sht. 2 of 6	5 V olts
TP77	U21PU41	P39, U21	I3, Sht. 2 of 6	5 Volts
TP78	U21PU40	P40, U21	J3, Sht. 2 of 6	5 Volts
TP79	U21PU39	P41, U21	I3, Sht. 2 of 6	5 Volts
TP80	U21PU38	P42, U21	J3, Sht. 2 of 6	5 Volts
TP81	U21PU37	P43, U21	I3, Sht. 2 of 6	5 Volts
TP83	IRSENSEb	P10, U17	D3, Sht. 1 of 6	High, low pulse 25µs wide every 1.25ms
TP88	IRDRIVEb	P11, U17	E7, Sht. 1 of 6	Low, high pulse 35µs wide every 1.25ms
TP90	IFPCA	P49, U17	H3, Sht. 1 of 6	Square Wave, 2.5ms cycle
TP91	IFPCB	P48, U17	G3, Sht. 1 of 6	Square Wave, 5ms cycle
TP92	IFPCC	P47, U17	G3, Sht. 1 of 6	Square Wave, 10ms cycle
TP93	IFPCD	P46, U17	G3, Sht. 1 of 6	0 Volts
TP96	IEXTMIDITxD	P28, U21	I6, Sht. 2 of 6	5 Volts
TP105	U21PU57	P57, U21	I5, Sht. 2 of 6	5 Volts
TP108	NVRAMSELb	P14, U4	F5, Sht. 3 of 6	
TP109	CPUR/Wb	P2, U8 or P3, U8	F2, Sht. 4 of 6	Low, high data bursts predominately .6ms apart
TP112	U16PU9	P9, U16	C2, Sht. 5 of 6	5 Volts
TP113	MTOPI6	P11, U16	D2, Sht. 5 of 6	High, low pulse .03µs wide every 20µs

I/O Board, 12105101

25324306	MACHINE SCREW BH 3X6 WHITE
32034011	HEAT SINK
32034111	I/O PCB 1/4"JACK SUPPORT BRACKET
32034411	POWER SWITCH L/S BRACKET
35040105	BATTERY COINCELL 3V,195mah CR2032
35040201	BATTERY HOLDER
41021902	CONN PWR PCMT RIGHT ANGLE
41025310	HEADER SIG ROW .156"SP 10PIN
41030310	CONN MIDI
41034003	HEADER .098"SP 3PIN
41034007	HEADER .098"SP 7PIN
41034109	HEADER SIG ROW .098"SP 9PIN
43010510	SWITCH SLIDER R/A PCMT SPDT
43020201	POWER SWITCH
51102302	POT R/A 10K
52001204	CAP CERMONO 0.1UF 50V 20% .3AX
52001305	CAP ELECT 100UF 10V
52001708	CAP ELECT 22UF 25V 20% RAD
52003002	CAP ELECT 1000UF 10V
52004410	CAP ELECT 10000UF 16V
52005401	CAP CERMONO 1000PF 100V 10% X7R AX
53000801	DIODE SWITCH (1N4148)
53010010	DIODE PWR SIP 4.2LS 8A
53010501	DIODE PWR SHOTTKY 1A 20V (1N5817)
54000602	TSTR PN2907 TO-92
54000801	TSTR GP NPN (PN2222)
54001201	TSTR 2SA1271
54010101	TSTR KSA931
54010301	TSTR KSC2331
63002301	IC OPTO COUPLER (PC-910)
64001502	IC LINEAR +5V 7805 TO-220
64001503	IC LINEAR -5V 7905TO-220
64001903	IC LINER OPAMP TLC2272CP TI
64002801	IC LINEAR NE5532AN
64003505	IC LINEAR AMP LM358
241034401	CONN 1/4" MONO
241034501	PHONE JACK RA (JACK 1/4")

Main Control Panel Board, 12105201

13040104	CABLE FRT PANEL TO SLIDER 7PIN #26 AWG
13040116	CABLE ENGINE TO FRONT PANEL 20PIN RIBBON
32009401	CONTROL PANEL PCB SUPPORT BRACKET PC-88
35020711	KNOB ENCODER
35026011	SM BUTTON W/LED PC-88
35026101	LG BUTTON W/LED PC-88
35026111	LG BUTTON W/LED<1,2,3,4>
35026112	LG BUTTON W/LED<5,6,7,8>
35026113	LG BUTTON W/LED<9,10,11,12>
35026114	LG BUTTON W/LED<13,14,15,16>
35026211	LG BUTTON NO LED(3)<1,2,3>
35026212	LG BUTTON NO LED(3)<4,5,6>
35026213	LG BUTTON NO LED(3)<7,8,9>
35026214	LG BUTTON NO LED(3)<+/-,O,CLEAR>
35026215	LG BUTTON NO LED(1)<CANCEL>
35026216	LG BUTTON NO LED(1)<ENTER>
35026217	LG BUTTON NO LED
35026711	SPIN KNOB BEZEL
43010201	SWITCH TACT
44010501	ENCODER 36STEP 2BIT
45010601	LED MINI RED, CLEAR, T1(WHITE)
45010612	LED MINI GREEN,DIFUSSED,T1
51000906	RESNET 10KX9 10PIN
52001204	CAP CERMONO 0.1UF 50V 20% .3AX
52003101	CAP ELECT 470UF VERT ECE-BOJU471
53000801	DIODE SWITCH (1N4148)
54000801	TSTR GP NPN (PN2222)
54001201	TSTR 2SA1271
61013601	IC LOGIC 74HC138 DIP16
61014001	IC LOGIC 74HC541 DIP20
61020501	IC LOGIC 74HC373 DIP20

Slider Board, 12105301

13040102	CABLE ENGINE/SLIDER 6PIN 16"
35026321	SLIDER KNOB PC-88
35026411	SLIDER BEZEL PC-88
39000701	SLIDE VOLUME FELT
41030807	HEADER SIG ROW .098"SP 7P R/A
43010201	SWITCH TACT
45010610	LED MINI RED/GREEN DIFUSSED
51101502	SLIDER VOLUME 10KB-LIN 45MM

LCD Assembly, 45010302

13040110	CABLE ENGINE TO LCD BACKLITE 2PIN #26AWG
13040112	CABLE ENGINE TO LCD 14PIN RIBBON 18"
25224406	TAPPING SCREW-2 BH 3X6 WHITE
35026511	LCD DISPLAY LENS PC-88
35026611	LCD SUPPORT BEZEL PC-88
35026811	LED LIGHT PIPE PC-88
45010302	LCD (ORION 20216L-1VZ0) PC-88

Engine Board (DIP), 12105001

35026411	SLIDER BEZEL PC-88
39000701	SLIDE VOLUME FELT (0.3tX12X70)
41021120	SOCKET IC .3W 20PIN
41021132	SOCKET IC .6W 32PIN
41025203	HEADER .1"SP 3PIN
41025213	HEADER DUAL ROW 1"SP 13PIN
41025310	HEADER SIG ROW .156"SP 10PIN
41031210	HEADER S.R. DIP .1"X.1"SP 14P(057-014-15
41031220	HEADER .1"SP DUAL ROW 20PIN(057-020-153)
41034002	HEADER .098"SP 2PIN(22-03-5025)
41034003	HEADER .098"SP 3PIN(22-03-5035)
41034005	HEADER .098"SP 5PIN(22-03-5055)
41034006	HEADER .098"SP 6PIN(22-03-5065)
41034007	HEADER .098"SP 7PIN(22-03-5075)
41034109	HEADER SIG ROW .098"SP 9PIN(22-03-5095)
51101610	SLIDER VOLUME 10KAX2 45MM
52001712	CAP ELECT 1000UF 25V 20% RAD
52004201	CAP ELECT 10UF 35V 20% .08SP
52004202	CAP ELECT 33UF 35V RADIAL
52005105	CAP ELECT 100UF 6.3V RADIAL .08"SP 5MM D
53000701	DIODE 1N4001 DO-41
53000801	DIODE SWITCH (1N4148)
53010501	DIODE PWR SHOTTKY 1A 20V (1N5817)
55002001	INDUCTOR (BLO2RN2-R62)
55004303	EMI FILTER,DUAL EXC-EMT221BT
59002003	CRYSTAL 12.0MHZ FUND PLL 32PF W/GND
59010002	CRYSTAL 19.968MHZ FUND PLL 32PF W/GND
59010108	CRYSTAL 16MHz
62004201	IC EPROM 512KX8 120NS DIP32
62005702	IC PAL GAL16V8-15LP
64001903	IC LINER OPAMP TLC2272CP TI

Engine Board (SMD), 12105001

61000102	IC LOGIC 74F138 SOP16
61002202	IC LOGIC 74LS139 SOP16
61003002	IC LOGIC 74LS245 SOP
61005302	IC LOGIC 74LS164 SOP16
61010302	IC LOGIC 74HCU04D SOP
62100405	IC DRAM 64KX16 SOJ40 VITELIC 53C664
62200012	IC SRAM 128KX8 SOP32(KM681000ALG)
62300101	IC KM44C256P-07 SOJ20/26
64010110	IC ANALOG MUX8-to-1 SOIC16(CD4051)
83102502	IC MEMORY MASK ROM 2MX8 150NS MAX
262001002	IC TMP68301(A)F-16
262100602	IC MICROCONTROLLER 37451E8FP
263010310	IC LINER DAC AD1865
266000501	IC CUSTOM HOMER
266000601	IC CUSTOM MARGE

Wheels Assembly

13040122	CABLE POT TO WHEELS BD 3PIN #26 AWG 4"
25224410	TAPPING SCREW-2 BH 3X10 WHITE
25224414	TAPPING SCREW-2 BH 3X14 WHITE
32021811	BUSHING
32021911	SPRING TORSION
32034211	PITCH & MOD WHEEL MOUNTING B/K PC-88
35020311	PITCH & MOD WHEEL „35(BLACK
35027011	PITCH & MOD WHEEL CHEEK BLOCK PC-88
39000114	HEATSINK TUBING 4.0
41030004	HEADER .1"SP 4PIN
41034005	HEADER .098"SP 5PIN(22-03-5055)
51101401	TRIMPOT 6MM CARBON PCMT 100K
51101402	TRIMPOT 6MM SUBMINI 5K
51101410	RES TRIMPOT 3/4T 50K
51102301	POT ROTARY 10K K2000
52001204	CAP CERMONO 0.1UF 50V 20% .3AX
64010020	IC OPAMP QUAD RAIL-TO-RAIL TC2274 DIP14
12105402	PCB WHEELS

Keyboard Assembly, 215040410

12082470	PCB KEY CONTACT LOW
12082480	PCB KEY CONTACT HIGH
22811001	KEY CONTACTS
39815001	KEY NATURAL A
39815002	KEY NATURAL B
39815003	KEY NATURAL C
39815004	KEY NATURAL D
39815005	KEY NATURAL E
39815006	KEY NATURAL F
39815007	KEY NATURAL G
39815008	KEY NATURAL LOW A
39815009	KEY NATURAL HIGH C
39815010	KEY SHARP
39815015	KEY WEIGHT NATURAL
39815016	KEY WEIGHT SHARP
39815018	KEY FELT
39815019	KEY WEIGHT BRACKET
39815020	KEY PIVOT (GREEN)
49201600	STRIP MONOPRESSURE

Cables

13040100	CABLE ENGINE TO I/O 7 PIN 26 AWG SHLD
13040106	CABLE ENGINE TO I/O 9 COND
13040108	CABLE ENGINE TO WHEELS/PRESS 5PIN
13040114	CABLE ENGINE TO I/O 3PIN(AUDIO)
13040118	CABLE ENGINE TO KEYBOARD BASS 20PIN RIBB
13040120	CABLE ENGINE TO KEYBOARD TREBLE 20PIN
13040124	CABLE ENGINE TO I/O 10PIN #18AWG (POWER)

Case/Enclosure

32033511	TOP COVER PC-88
32033611	BOTTOM PC-88
32033711	LEFT SIDE BRACKET PC-88
32033811	RIGHT SIDE BRACKET PC-88
32033911	TOP CLAMPING BRACKET(L) PC-88
32033921	TOP CLAMPING BRACKET(R) PC-88
35026911	LEFT ENDCAP PC-88
35026921	RIGHT ENDCAP PC-88
39040004	BUMPON 3M SJ-5514 BLK

Hardware

15048226	FELT 1TX50MMX1235MM BLK KYBD
25223410	TAPPING SCREW-2 BH 3X10 BLK
25224408	TAPPING SCREW-2 BH 3X8 WHITE
25224508	TAPPING SCREW-2 BH 3.5X8 WHITE
25323306	MACHINE SCREW BH 3X6 BLK
25323310	MACHINE SCREW BH 3X10 BLK
25323408	MACHINE SCREW BH 4X8 BLK
25323410	MACHINE SCREW BH 4X10 BLK

Miscellaneous

35027211	POWER CORD STRAIN RELIEF PC-88
39003811	SYSTEM PCB RF SHIELD PC-88
39003911	LEFT FRONT PANEL PCB RF SHIELD PC-88
39004011	RIGHT FRONT PANEL PCB RF SHIELD PC-88
52001000	AC/DC ADAPTER 9/VAC 2A AD54001 PC-88
243010702	FOOT PEDAL VFP1/10

Chapter 6 *Schematics*

The schematic diagrams for the PC88 and the PC88MX are shown as follows:

I/O Board, Sheets 1 and 2

Main Control Panel Board

Slider Board

Engine Board, Sheets 1 through 6

VGM Board, Sheets 1 through 5

Wheels Board

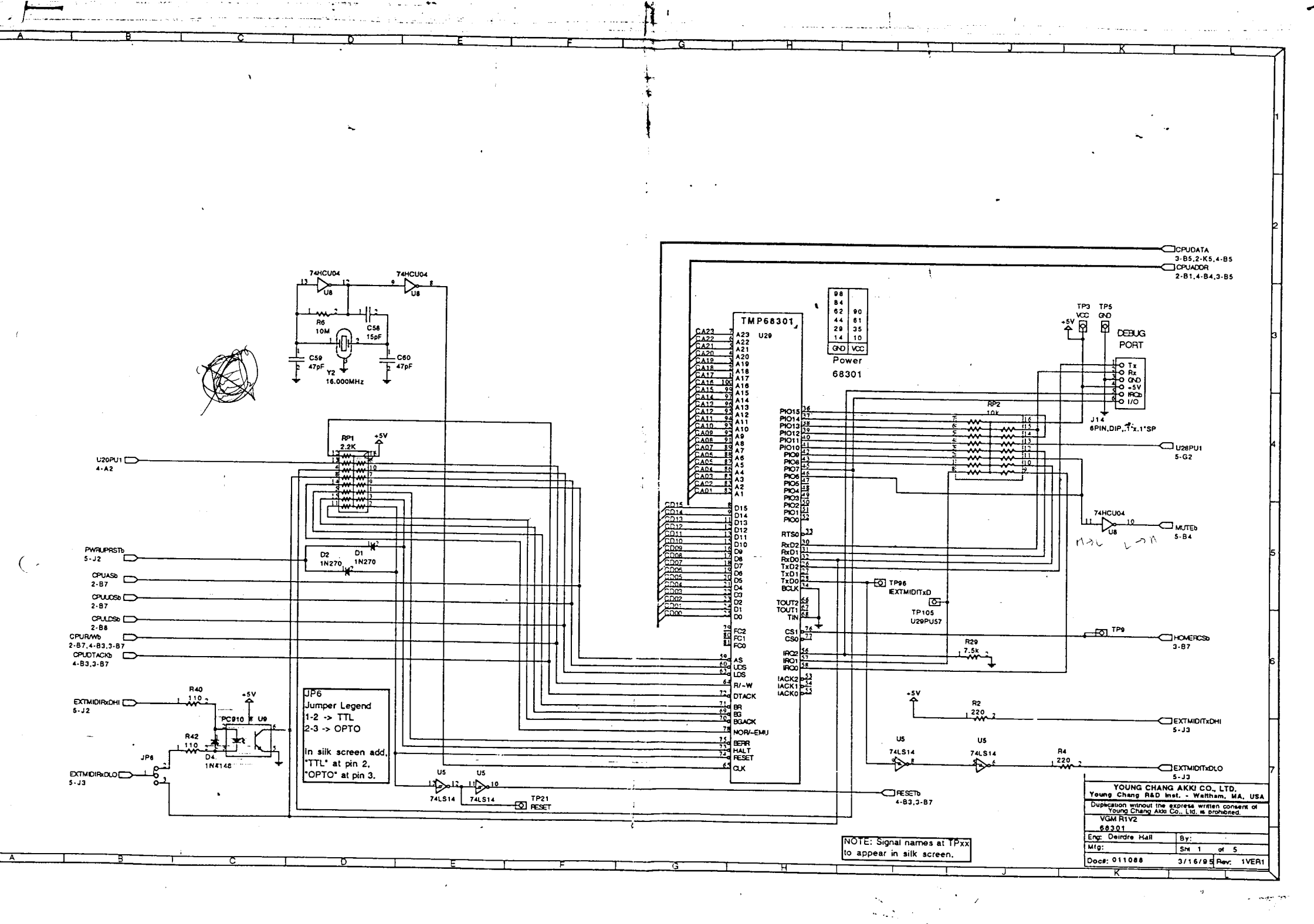
74HCU04
U8
R6
10M
C58
15pF
C59
47pF
C60
47pF
Y2
16.000MHz
RP1
2.2K
+5V
U20PU1
4-A2
D2
1N270
D1
1N270
PWRUPRSTb
5-J2
CPUASb
2-B7
CPUUDSb
2-B7
CPULDSb
2-B8
CPUR/Wb
2-B7,4-B3,3-B7
CPUDTACKb
4-B3,3-B7
R40
110
EXTMIDIRxDHI
5-J2
PC910
U9
R42
110
D4.
1N4148
JP6
EXTMIDIRxDLO
5-J3
JP6
Jumper Legend
1-2 -> TTL
2-3 -> OPTO
In silk screen add,
"TTL" at pin 2,
"OPTO" at pin 3.
U5
74LS14
U5
74LS14
TP21
RESET
TMP68301
U29
A23
A22
A21
A20
A19
A18
A17
A16
A15
A14
A13
A12
A11
A10
A9
A8
A7
A6
A5
A4
A3
A2
A1
D15
D14
D13
D12
D11
D10
D9
D8
D7
D6
D5
D4
D3
D2
D1
D0
FC2
FC1
FC0
AS
UDS
LDS
R/-W
DTACK
BR
BG
BGACK
NOR/-EMU
BERR
HALT
RESET
CLK
Power
68301
CPUDATA
3-B5,2-K5,4-B5
CPUADDR
2-B1,4-B4,3-B5
TP3
VCC
TP5
GND
DEBUG
PORT
Tx
Rx
GND
+5V
IRQb
I/O
J14
6PIN,DIP,.1"x.1"SP
RP2
10k
PIO15
PIO14
PIO13
PIO12
PIO11
PIO10
PIO9
PIO8
PIO7
PIO6
PIO5
PIO4
PIO3
PIO2
PIO1
PIO0
U28PU1
5-G2
74HCU04
U8
MUTEb
5-B4
RTS0
RxD2
RxD1
RxD0
TxD2
TxD1
TxD0
BCLK
TOUT2
TOUT1
TIN
TP96
EXTMIDITxD
TP105
U29PU57
CS1
CS0
TP9
HOMERCSb
3-B7
R29
7.5k
IRQ2
IRQ1
IRQ0
IACK2
IACK1
IACK0
+5V
R2
220
EXTMIDITxDHI
5-J3
U5
74LS14
U5
74LS14
R4
220
EXTMIDITxDLO
5-J3
RESETb
4-B3,3-B7
NOTE: Signal names at TPxx
to appear in silk screen.
YOUNG CHANG AKKI CO., LTD.
Young Chang R&D Inst. - Waltham, MA, USA
Duplication without the express written consent of
Young Chang Akki Co., Ltd. is prohibited.
VGM R1V2
68301
Engr: Deirdre Hall
By:
Mfg:
Sht 1 of 5
Docs: 011088
3/16/95
Rev: 1VER1

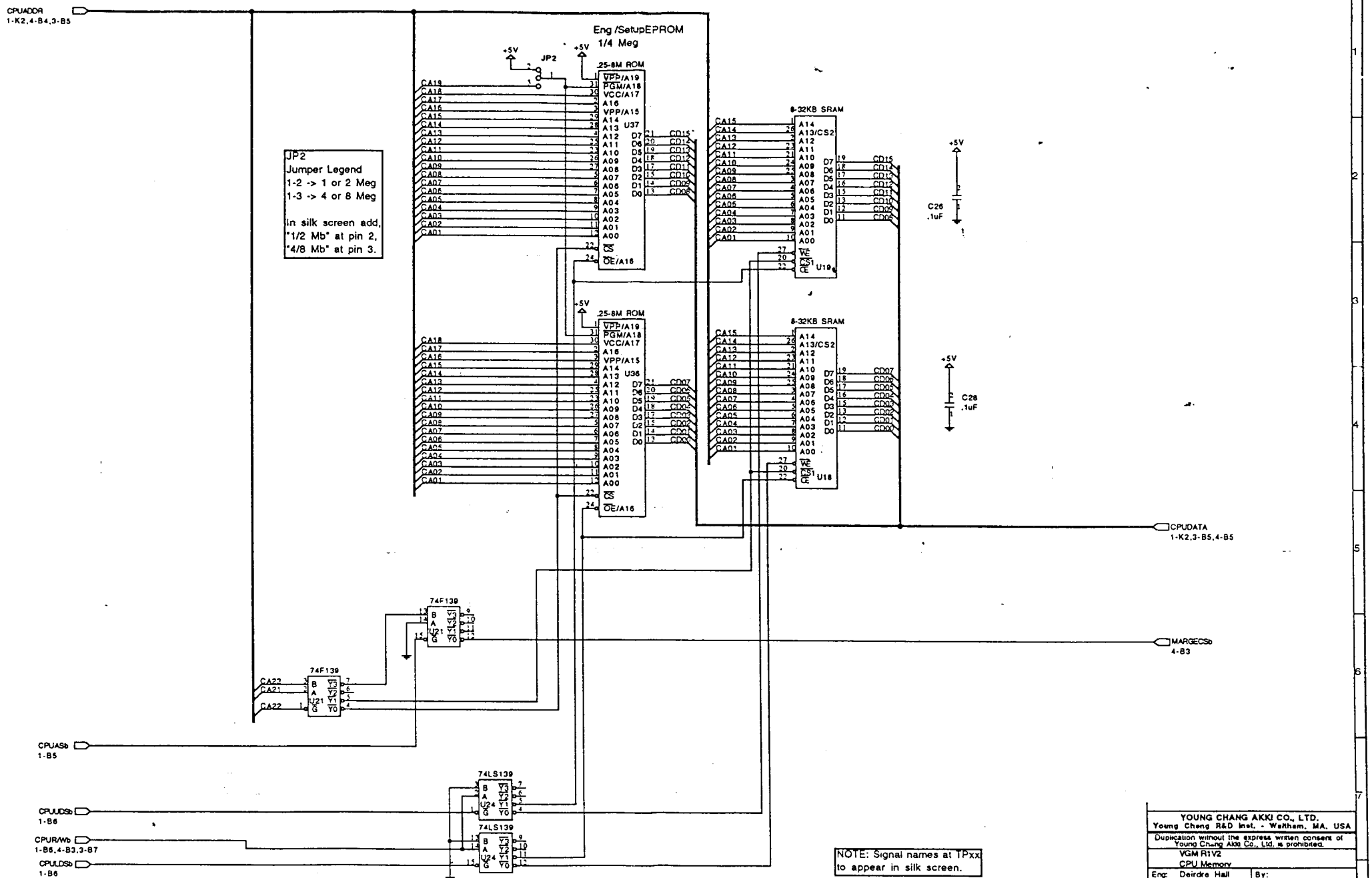
CPUADDR
1-K2,4-B4,3-B5
Eng /SetupEPROM
1/4 Meg
JP2
Jumper Legend
1-2 -> 1 or 2 Meg
1-3 -> 4 or 8 Meg
In silk screen add,
"1/2 Mb" at pin 2,
"4/8 Mb" at pin 3.
+5V
JP2
.25-8M ROM
VPP/A19
PGM/A18
VCC/A17
A16
VPP/A15
A14
A13
A12
A11
A10
A09
A08
A07
A06
A05
A04
A03
A02
A01
A00
U37
U36
D7
D6
D5
D4
D3
D2
D1
D0
CS
OE/A16
8-32KB SRAM
A13/CS2
WE
U19
U18
C26
.1uF
CPUDATA
1-K2,3-B5,4-B5
74F139
U21
MARGECSb
4-B3
CPUASb
1-B5
74LS139
U24
CPUUDSb
1-B6
CPUR/Wb
1-B6,4-B3,3-B7
CPULDSb
1-B6
NOTE: Signal names at TPxxx
to appear in silk screen.
YOUNG CHANG AKKI CO., LTD.
Young Cheng R&D Inst. - Waltham, MA, USA
Duplication without the express written consent of
Young Chang Akki Co., Ltd. is prohibited.
VGM R1V2
CPU Memory
Eng: Deirdre Hall
By:
Mfg:
Sht 2 of 5
Doc#: 011086
3/16/95
Rev: 1VER1

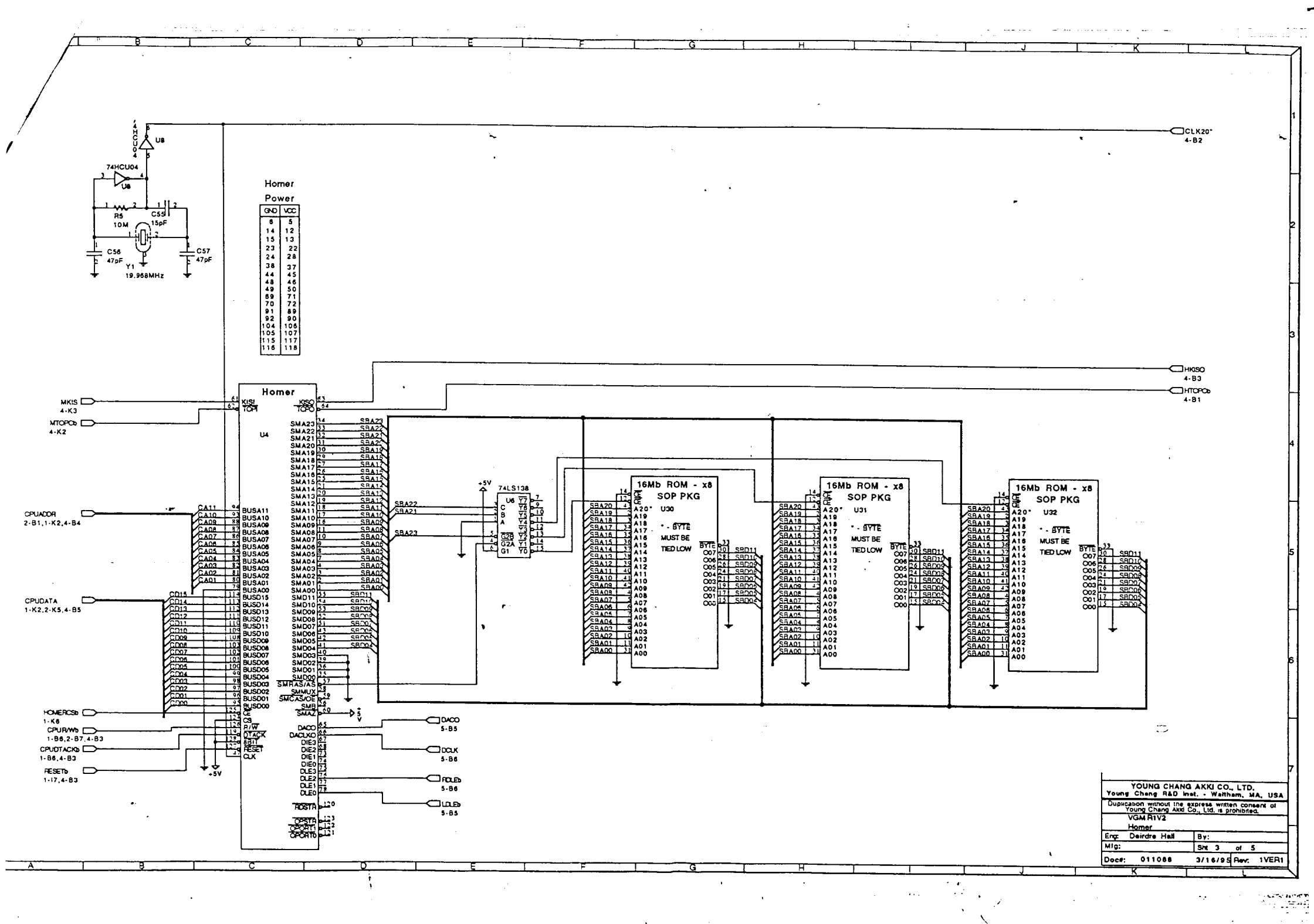
74HCU04
U8
R5
10M
C55
15pF
C56
47pF
C57
47pF
Y1
19.968MHz
CLK20*
4-B2
Homer
Power
GND
VCC
Homer
U4
MKIS
4-K3
MTOPOb
4-K2
HKISO
4-B3
HTOPOb
4-B1
CPUADDR
2-B1,1-K2,4-B4
CPUDATA
1-K2,2-K5,4-B5
HOMERCSb
1-K6
CPUR/Wb
1-B6,2-B7,4-B3
CPUDTACKb
1-B6,4-B3
RESETb
1-I7,4-B3
74LS138
U6
16Mb ROM - x8
SOP PKG
U30
U31
U32
* - BYTE
MUST BE
TIED LOW
DACO
5-B5
DCLK
5-B6
RDLEb
5-B6
LDLEb
5-B5
YOUNG CHANG AKKI CO., LTD.
Young Chang R&D Inst. - Waltham, MA, USA
Duplication without the express written consent of Young Chang Akki Co., Ltd. is prohibited.
VGM R1V2
Homer
Eng: Deirdre Hall
By:
Mfg:
Sht 3 of 5
Docs: 011088
3/16/95
Rev: 1VER1

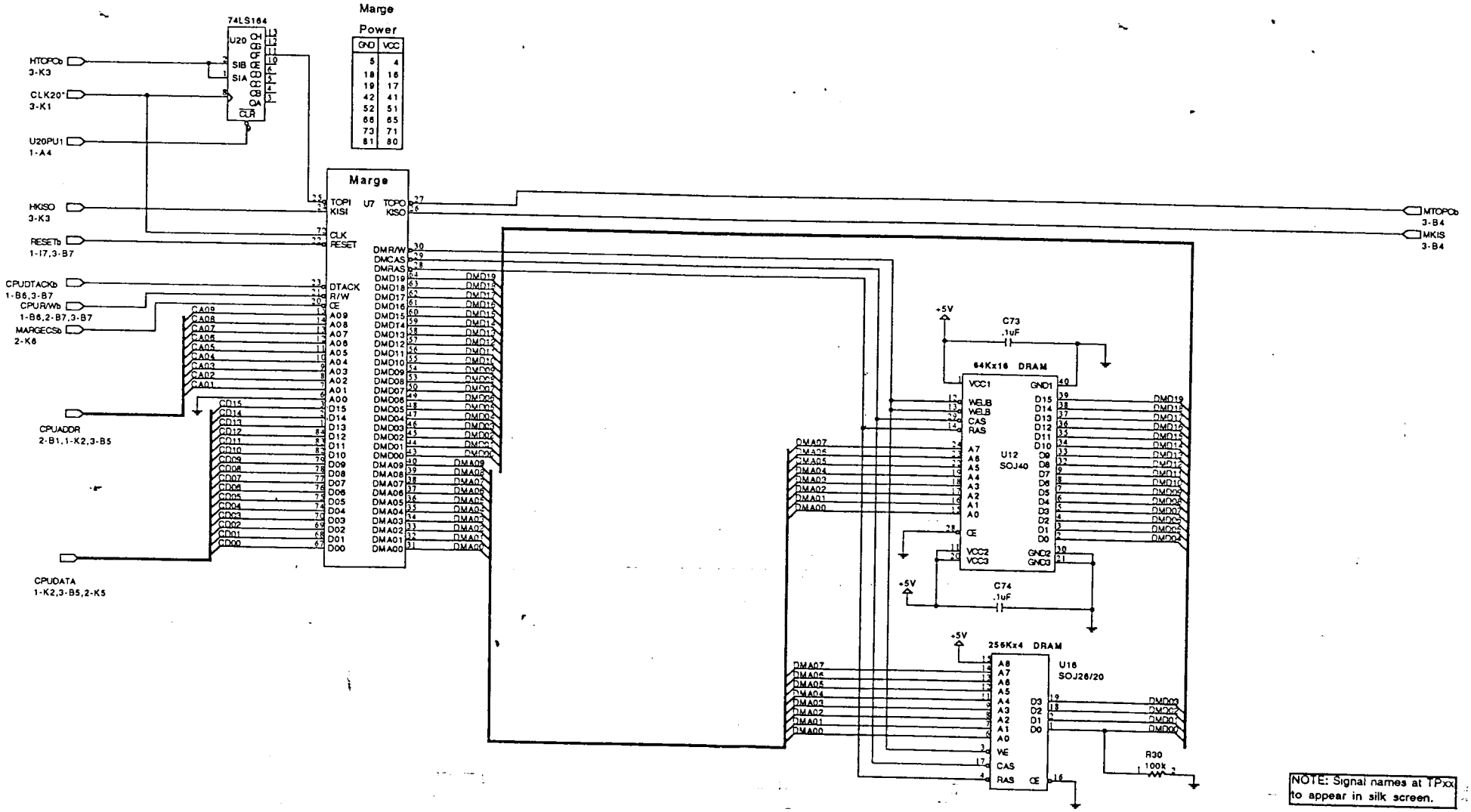

YOUNG CHANG AKKI CO., LTD. Young Chang R&D Inst. - Waltham, MA, USA	
Duplication without the express written consent of Young Chang Akki Co., Ltd. is prohibited.	
VGM R1V2	
Marge w/ Daisy RAM	
Eng: Deirdre Hall	By:
Mfg:	Sht 4 of 5
Doc#: 011068	3/16/95 Rev: 1VER1

DECOUPLING CAPS, ONE AT EACH GROUND PIN OF U1,U2,U5,U8,U12,U16-U21,U28-U32
, ONE AT EACH VCC PIN OF U6,U7,U48

C1 .1uF C2 .1uF C3 .1uF C4 .1uF C5 .1uF C6 .1uF C7 .1uF C8 .1uF C9 .1uF C10 .1uF C11 .1uF C12 .1uF C13 .1uF C14 .1uF C15 .1uF C16 .1uF C17 .1uF C18 .1uF C19 .1uF C20 .1uF C21 .1uF C22 .1uF C23 .1uF C24 .1uF C25 .1uF C27 .1uF C29 .1uF C30 .1uF

D3 1N4148
U5 74LS14
U5 74LS14
U28PU1 1-K4
C71 100uF16V
PWRUPRSTb 1-B5

C72 100uF

MASS Connector J4
DGND DGND DGND DGND DGND DGND DGND NC AGND AGND AGND AGND AGND AGND
MIDIINHI MIDIINLO +5V MIDIOUTLO +5V MIDIOUTHI +5V NC +12V LEFT -12V RIGHT RESETb

EXTMIDIRxDHI 1-B6
EXTMIDIRxDLO 1-B7
EXTMIDITxDLO 1-K7
EXTMIDITxDHI 1-K7

L14 Dual Bead
L15 Dual Bead
L3 Dual Bead
AGnd

MUTEb 1-K5

RECOMMENDED OP AMP IS TLC2274

AD1865
LTRIM LADJ RTRIM RADJ U3 LDIN LLE RDIN RLE CLK +5DIG DGND NC
LOUT LSJ LFF LVOUT ROUT RSJ RFF RVOUT +5ANA AGNDL AGNDR -5ANA

DACO 3-E7
LDLEb 3-E7
RDLEb 3-E7
DCLK 3-E7

R7 1.50k,1% C61 22uF R11 178k,1% R9 1.50k,1% R13 1.50k,1% C63 .047uF C67 560pF,NPO C65 .018uF
R8 1.50k,1% C62 22uF R12 178K,1% R10 1.50k,1% R14 1.50k,1% C64 .047uF C68 560pF,NPO C66 .018uF
U1 OP AMP

R15 2.15k,1% R19 4.32k,1% R17 7.50K,1% C33 330pF,NPO C35 6800pF
R16 2.15k,1% R20 4.32k,1% R18 7.50K,1% C34 330pF,NPO C36 6800pF
C70 .1uF C31 .1uF

R27 2.2k
R28 2.2k

Q2 2N2222
Q1 PN2907
Q4 PN2907
Q3 2N2222
Q7 PN2907
Q6 2N2222
R31 100k
R32 10k
R3 1k
R41 1k
R21 1k
R1 2.2k
R39 2.2k

+12V -12V +5V +5Vana -5V AGnd

L1 Dual Bead
C45 .1uF
VR2 79L05
VR1 78L05
C47 10uF C48 .1uF C49 .1uF C50 10uF

VR2 Legend
Install 79L05 for 12V operation
Jumper pins 2 and 3 for 5v operation

VR1 Legend
Install 78L05 for 12V operation
Jumper pins 1 and 3 for 5v operation

Components tied to AGND to be separated from all others and AGND plane separated from DGND plane.

NOTE: Signal names at TPxx to appear in silk screen.

YOUNG CHANG AKKI CO., LTD. Young Chang R&D Inst. - Waltham, MA, USA	
Duplication without the express written consent of Young Chang Akki Co., Ltd. is prohibited.	
VGM R1V2	
DAC w/ filter and amp, Battery/Reset, Misc	
Eng: Deirdre Hall	By:
Mfg:	Sht 5 of 5
Doc#: 011088	3/16/95 Rev: 1VER1

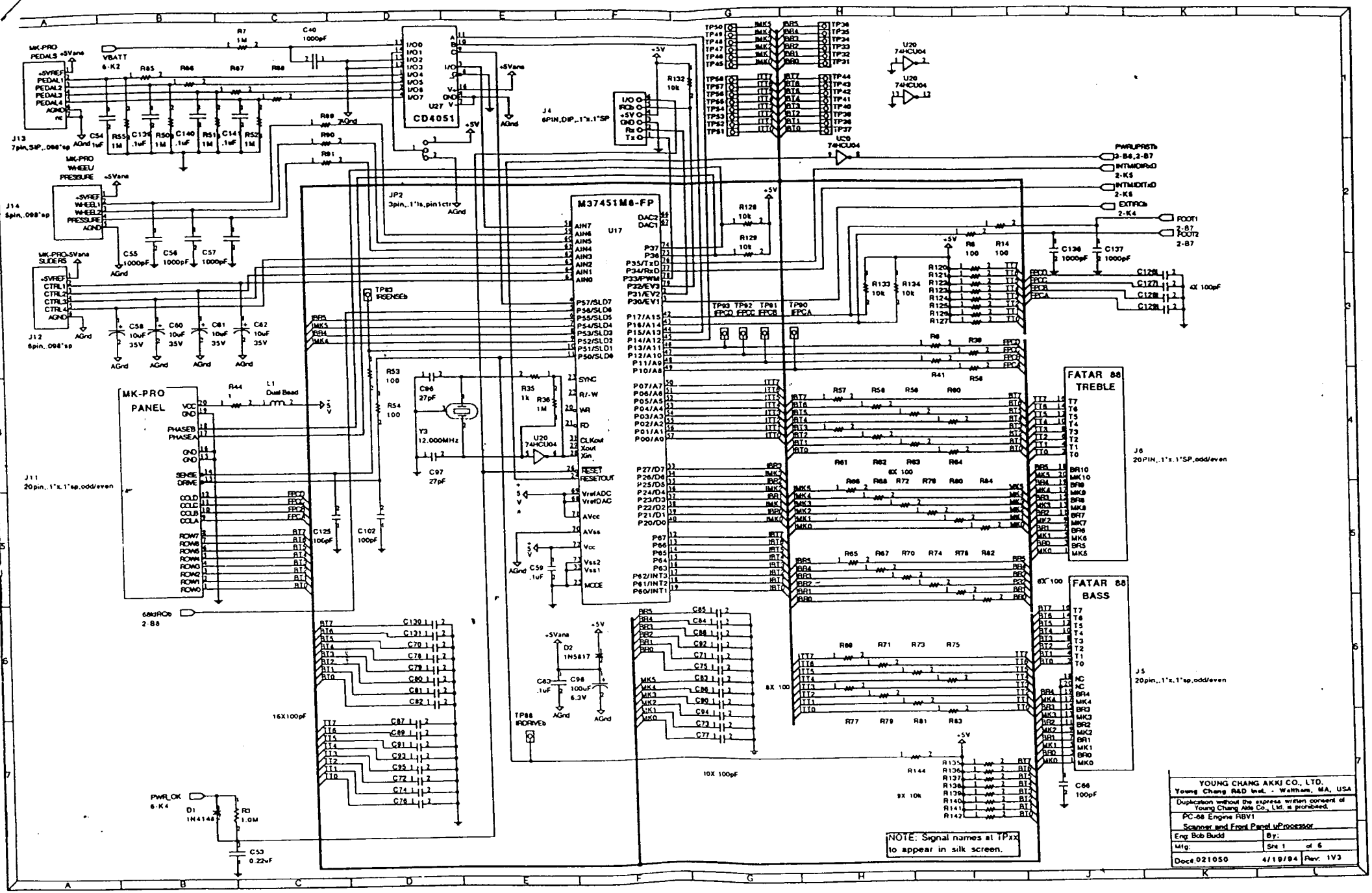
M37451M8-FP
CD4051
74HCU04
MK-PRO PANEL
FATAR 88 TREBLE
FATAR 88 BASS
NOTE: Signal names at TPxx to appear in silk screen.
YOUNG CHANG AKKI CO., LTD.
Young Chang R&D Inst. - Waltham, MA, USA
Duplication without the express written consent of Young Chang Akki Co., Ltd. is prohibited.
PC-88 Engine REV1
Scanner and Front Panel uProcessor
Eng: Bob Budd
By:
Mfg:
Sht 1 of 6
Docs.021050
4/19/94
Rev: 1V3

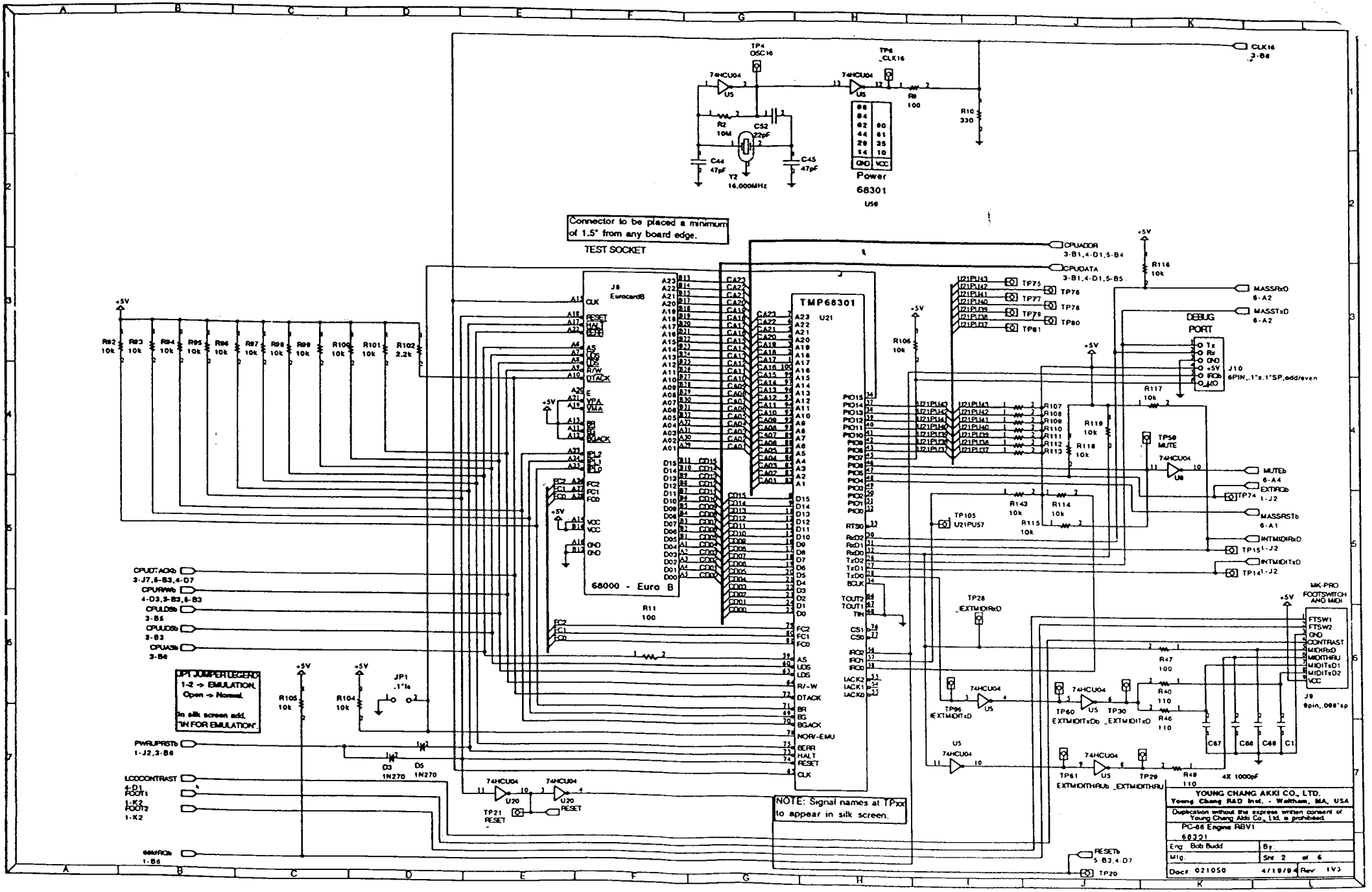

Connector to be placed a minimum of 1.5" from any board edge.
TEST SOCKET
J8 EurocardB
68000 - Euro B
TMP68301
U21
Power
68301
U59
Y2 16.000MHz
DEBUG PORT
J10 6PIN,.1"x.1"SP,odd/even
MK-PRO FOOTSWITCH AND MIDI
J9 9pin,.098"sp
JP1 JUMPER LEGEND
1-2 -> EMULATION,
Open -> Normal.
In silk screen add, "IN FOR EMULATION".
NOTE: Signal names at TPxx to appear in silk screen.
4X 1000pF
YOUNG CHANG AKKI CO., LTD.
Young Chang R&D Inst. - Waltham, MA, USA
Duplication without the express written consent of Young Chang Akki Co., Ltd. is prohibited.
PC-68 Engine RBV1
68301
Eng: Bob Budd
By:
Mfg:
Sht 2 of 6
Doc# 021050
4/19/94
Rev 1V3

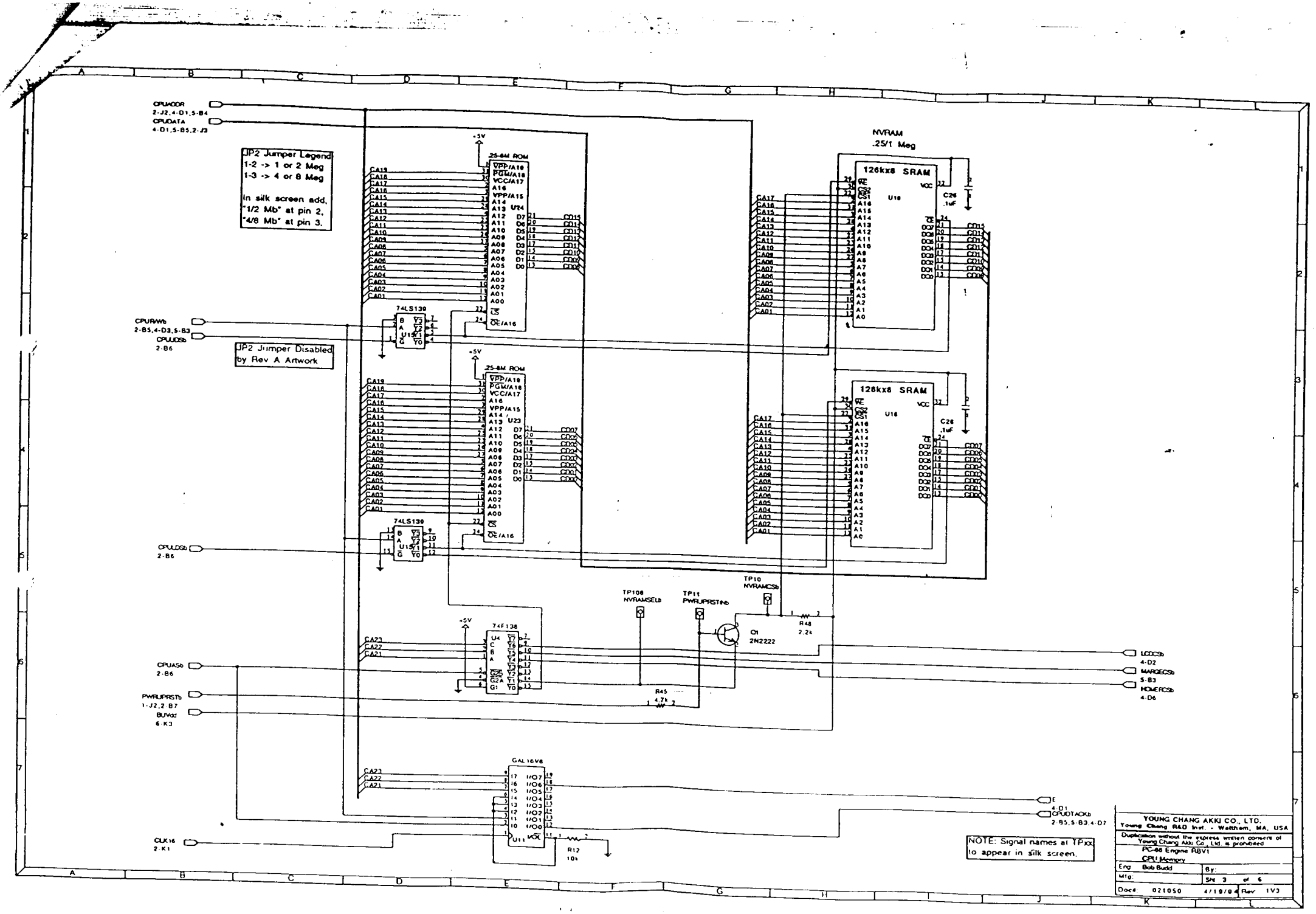

CPUADDR
2-J2,4-D1,5-B4
CPUDATA
4-D1,5-B5,2-J3
JP2 Jumper Legend
1-2 -> 1 or 2 Meg
1-3 -> 4 or 8 Meg
In silk screen add,
"1/2 Mb" at pin 2,
"4/8 Mb" at pin 3.
JP2 Jumper Disabled
by Rev A Artwork
CPURWb
2-B5,4-D3,5-B3
CPUUDSb
2-B6
CPULDSb
2-B6
CPUASb
2-B6
PWRUPRSTb
1-J2,2-B7
BUVdd
6-K3
CLK16
2-K1
NVRAM
.25/1 Meg
126kx8 SRAM
U19
U18
C26
.1uF
74LS139
U15
U23
74F138
U4
GAL16V8
U11
R12
10k
R45
4.7k
R48
2.2k
TP108
NVRAMSELb
TP11
PWRUPRSTINb
TP10
NVRAMCSb
Q1
2N2222
LCDCSb
4-D2
MARGECSb
5-B3
HOMERCSb
4-D6
E
4-D1
CPUDTACKb
2-B5,5-B3,4-D7
NOTE: Signal names at TPxx
to appear in silk screen.
YOUNG CHANG AKKI CO., LTD.
Young Chang R&D Inst. - Waltham, MA, USA
Duplication without the express written consent of
Young Chang Akki Co., Ltd. is prohibited
PC-88 Engine RBV1
CPU Memory
Eng: Bob Budd
By:
Mfg:
Sht 3 of 6
Doc# 021050
4/19/94
Rev 1V3

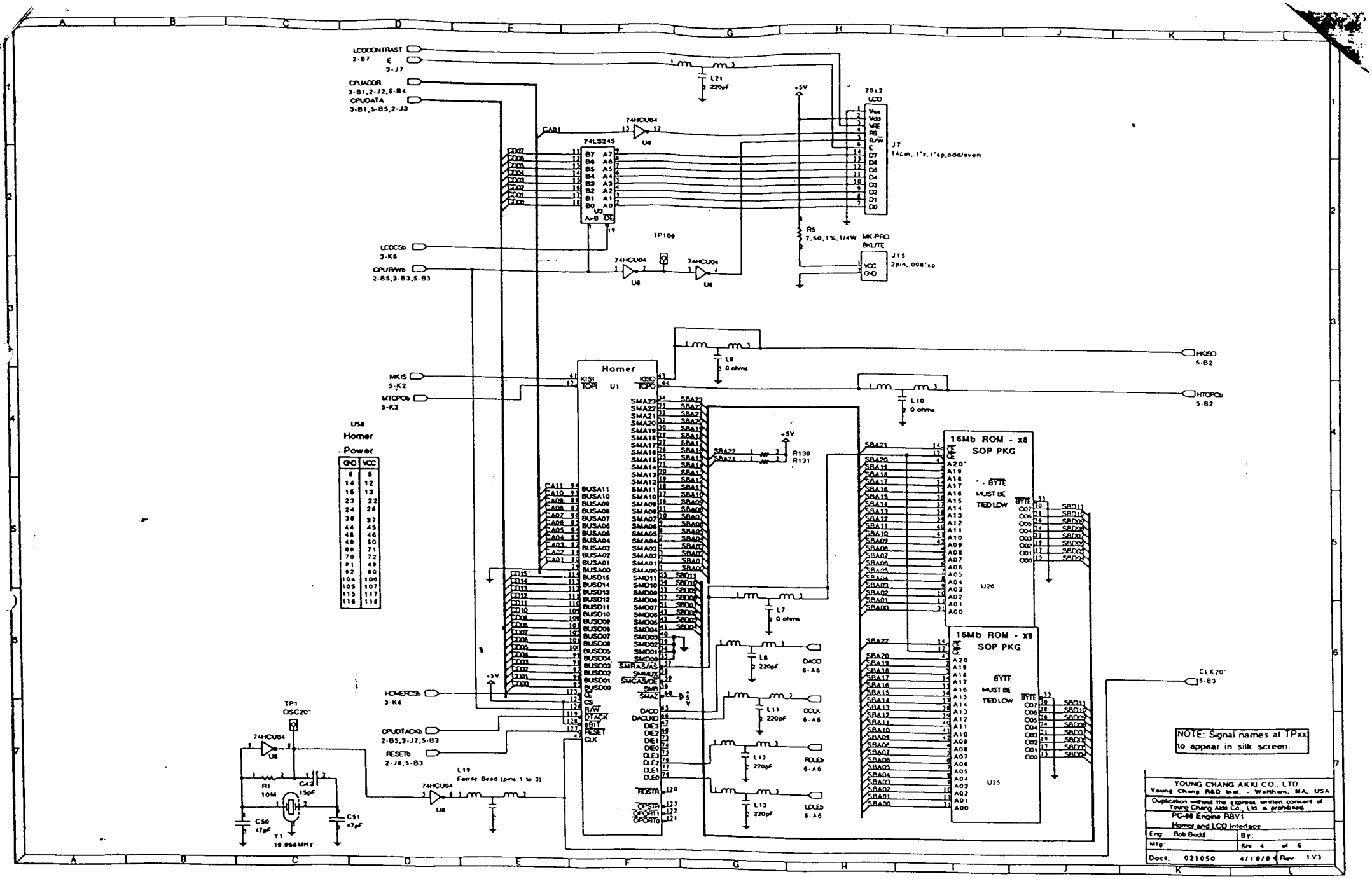
LCDCONTRAST
2-B7
E
3-J7
CPUADDR
3-B1,2-J2,5-B4
CPUDATA
3-B1,5-B5,2-J3
74HCU04
74LS245
20x2
LCD
J7
L21
220pF
+5V
R5
7.50,1%,1/4W
MK-PRO
BKLITE
J15
LCDCSb
3-K6
CPURWb
2-B5,3-B3,5-B3
TP109
MKIS
5-K2
MTOPOb
5-K2
Homer
U1
L9
0 ohms
L10
0 ohms
HKISO
5-B2
HTOPOb
5-B2
U58
Homer
Power
GND
VCC
16Mb ROM - x8
SOP PKG
BYTE
MUST BE
TIED LOW
U26
U25
L7
0 ohms
L8
220pF
L11
220pF
L12
220pF
L13
220pF
R130
R131
HOMERCSb
3-K6
CPUDTACKb
2-B5,3-J7,5-B3
RESETb
2-J8,5-B3
TP1
OSC20*
C42
15pF
C50
47pF
C51
47pF
Y1
19.968MHz
R1
10M
L19
Ferrite Bead (pins 1 to 3)
CLK20*
5-B3
NOTE: Signal names at TPxx to appear in silk screen.
YOUNG CHANG AKKI CO., LTD.
Young Chang R&D Inst. - Waltham, MA, USA
Duplication without the express written consent of Young Chang Akki Co., Ltd. is prohibited
PC-88 Engine REV1
Homer and LCD Interface
Eng: Bob Budd
By:
Mfg:
Sht 4 of 6
Docs: 021050
4/19/94
Rev 1V3

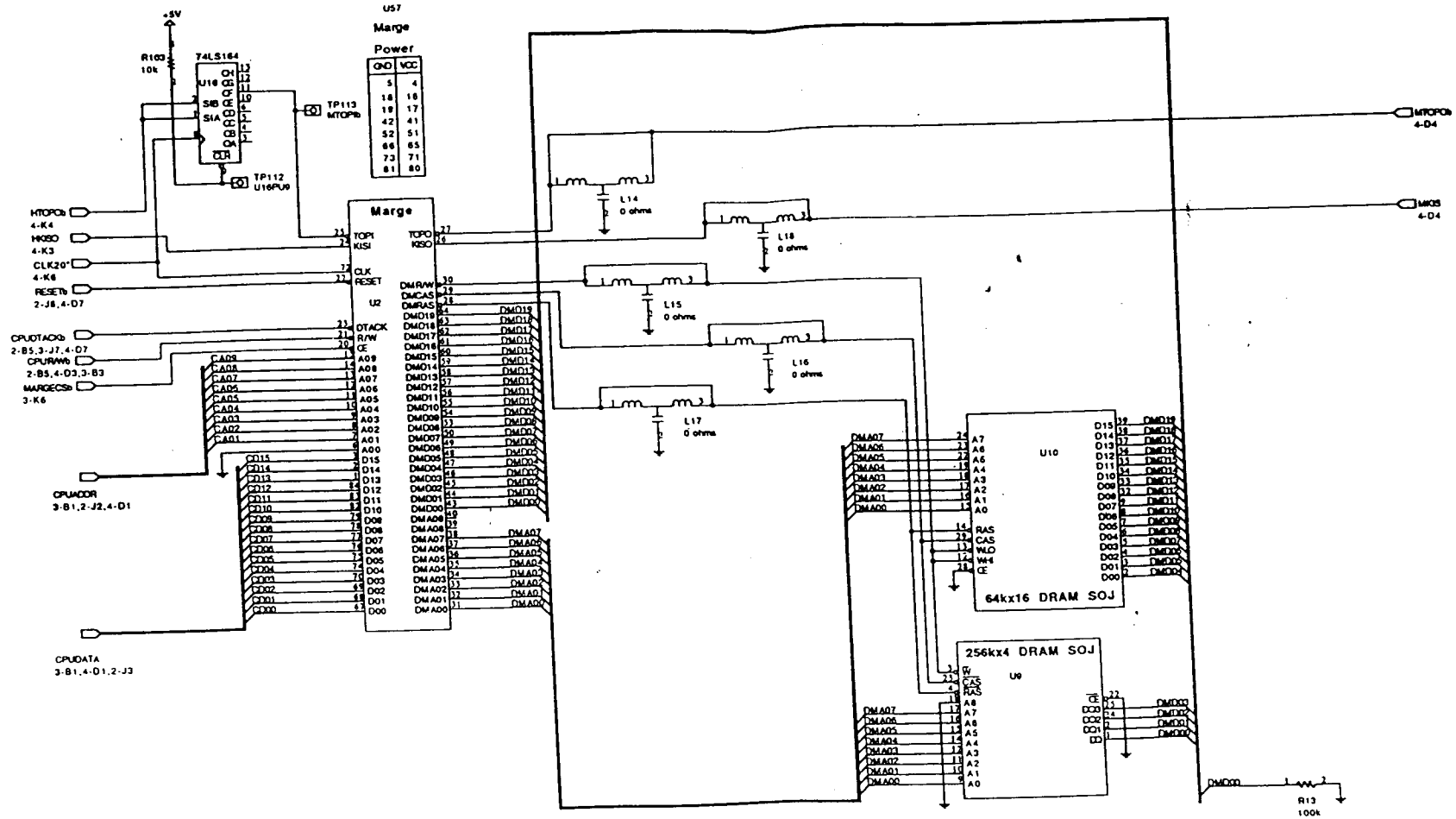

YOUNG CHANG AKKI CO., LTD.
Young Chang R&D Inst. - Waltham, MA, USA
Duplication without the express written consent of
Young Chang Akki Co., Ltd. is prohibited

PC-88 Engine REV1
Marge w/ Delay RAM

Eng: Bob Budd	By:		
Mfg:	Sht 5	of 6	
Docs 021050	4/19/94	Rev: 1V3	

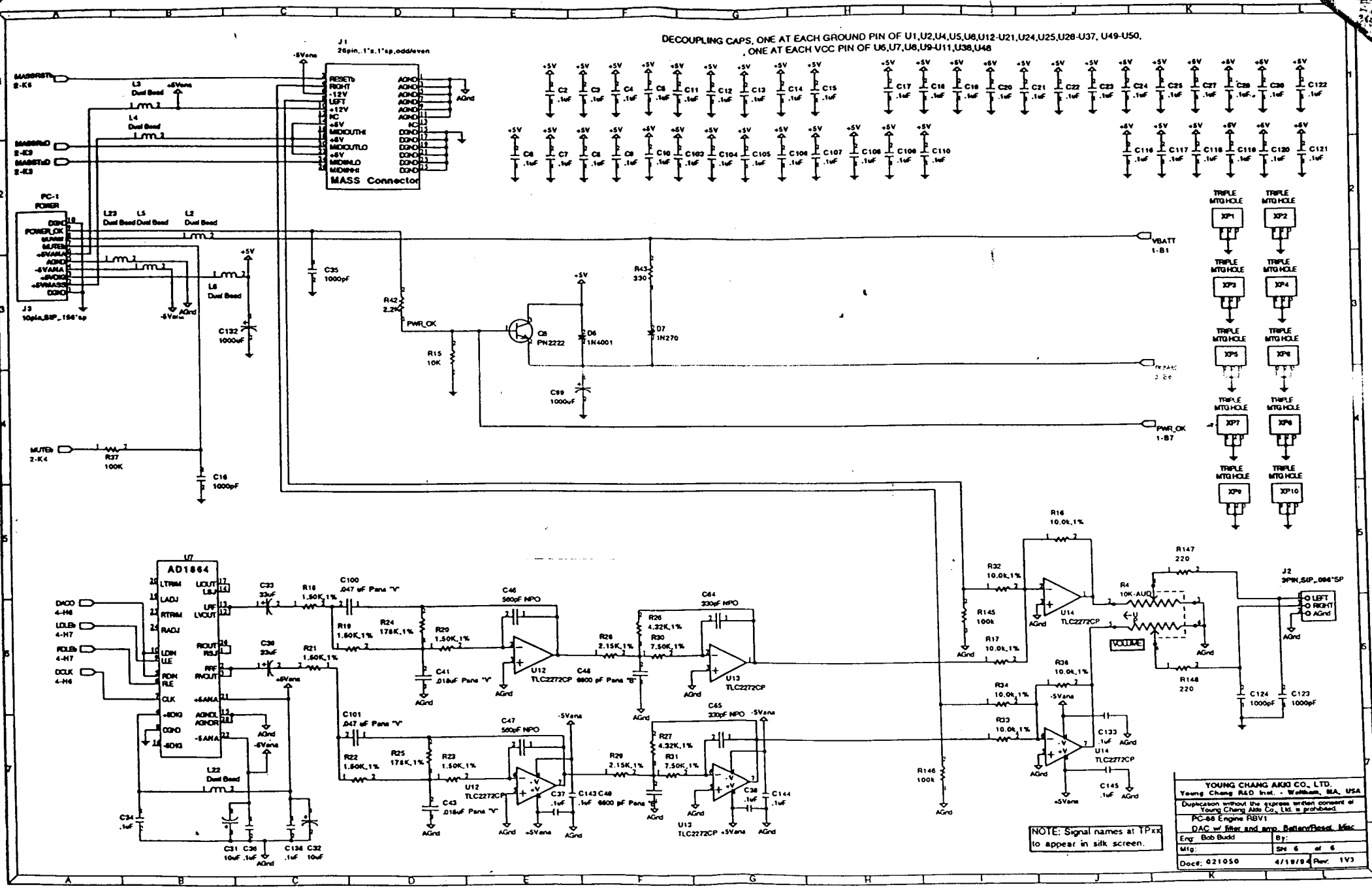
DECOUPLING CAPS, ONE AT EACH GROUND PIN OF U1,U2,U4,U5,U8,U12-U21,U24,U25,U28-U37, U49-U50,
, ONE AT EACH VCC PIN OF U6,U7,U8,U9-U11,U38,U48
J1
26pin,.1"x.1"sp,odd/even
MASS Connector
RESETb
RIGHT
+12V
LEFT
+12V
NC
+8V
MIDIOUTHI
+8V
MIDIOUTLO
+8V
MIDIINLO
MIDIINHI
AGND
DGND
-5Vana
+5V
MASSRSTb
2-K6
MASSRXD
2-K3
MASSTXD
2-K3
L3
Dual Bead
L4
Dual Bead
PC-1
POWER
POWER_OK
MUTEb
+5VANA
-5VANA
+5VMASS
DGND
J3
10pin_SIP_.156"sp
L23
Dual Bead
L5
Dual Bead
L2
Dual Bead
L6
Dual Bead
C132
1000uF
C35
1000pF
R42
2.2K
PWR_OK
R15
10K
Q8
PN2222
D6
1N4001
D7
1N270
R43
330
C89
1000uF
VBATT
1-B1
PWR_OK
1-B7
MUTEb
2-K4
R37
100K
C16
1000pF
TRIPLE MTG HOLE
XP1
XP2
XP3
XP4
XP5
XP6
XP7
XP8
XP9
XP10
U7
AD1864
LTRIM
LADJ
RTRIM
RADJ
LDIN
LLE
RDIN
RLE
CLK
+8DIG
DGND
-8DIG
LOUT
LSJ
LPF
LVOUT
ROUT
RSJ
RPF
RVOUT
+5ANA
AGNDL
AGNDR
-5ANA
DACO
4-H6
LDLEb
4-H7
RDLEb
4-H7
DCLK
4-H6
C23
33uF
C38
33uF
R18
1.50K,1%
R21
1.50K,1%
C100
.047 uF Pana "V"
R19
1.50K,1%
R24
178K,1%
R20
1.50K,1%
C41
.018uF Pana "V"
C46
560pF NPO
U12
TLC2272CP
C48
6800 pF Pana "B"
R28
2.15K,1%
R26
4.32K,1%
R30
7.50K,1%
C44
330pF NPO
U13
TLC2272CP
C101
.047 uF Pana "V"
R22
1.50K,1%
R25
178K,1%
R23
1.50K,1%
C43
.018uF Pana "V"
C47
560pF NPO
U12
TLC2272CP
C37
.1uF
C143
.1uF
C48
6800 pF Pana "B"
R29
2.15K,1%
R27
4.32K,1%
R31
7.50K,1%
C65
330pF NPO
U13
TLC2272CP
C38
.1uF
C144
.1uF
L22
Dual Bead
C34
.1uF
C31
10uF
C36
.1uF
C134
.1uF
C32
10uF
R16
10.0k,1%
R32
10.0k,1%
R145
100k
R17
10.0k,1%
U14
TLC2272CP
R147
220
R4
10K-AUD
VOLUME
R148
220
J2
3PIN,SIP_.094"SP
LEFT
RIGHT
AGnd
C124
1000pF
C123
1000pF
R36
10.0k,1%
R34
10.0k,1%
R33
10.0k,1%
U14
TLC2272CP
C133
.1uF
C145
.1uF
R146
100k
NOTE: Signal names at TPxx
to appear in silk screen.
YOUNG CHANG AKKI CO., LTD.
Young Chang R&D Inst. - Waltham, MA, USA
Duplication without the express written consent of Young Chang Akki Co., Ltd. is prohibited.
PC-66 Engine RBV1
DAC w/ filter and amp, Battery/Boost, Misc
Eng: Bob Budd
By:
Mfg:
Sht 6 of 6
Docs: 021050
4/19/94
Rev: 1V3

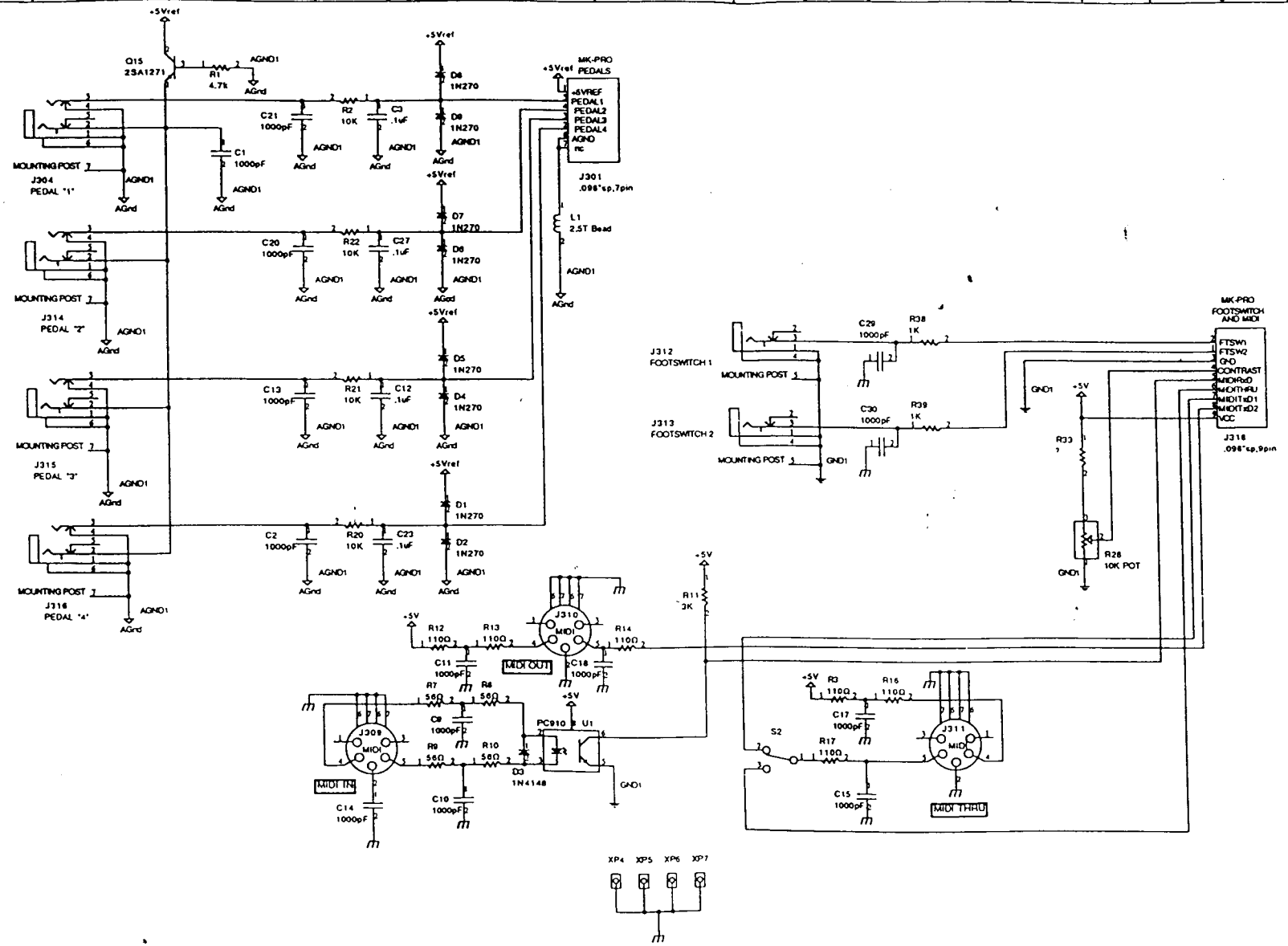

YOUNG CHANG AKKI CO., LTD.	
Young Chang R&D Inst. - Waltham, MA, USA	
Duplication without the express written consent of Young Chang Akki Co., Ltd. is prohibited.	
PC-88 I/O PCB RAV3	
CONTROLS AND MIDI	
Eng:	By: B. Budd
Mfg:	Sht 1 of 2
Doc#: 021051	2/23/94 Rev 5 V 1

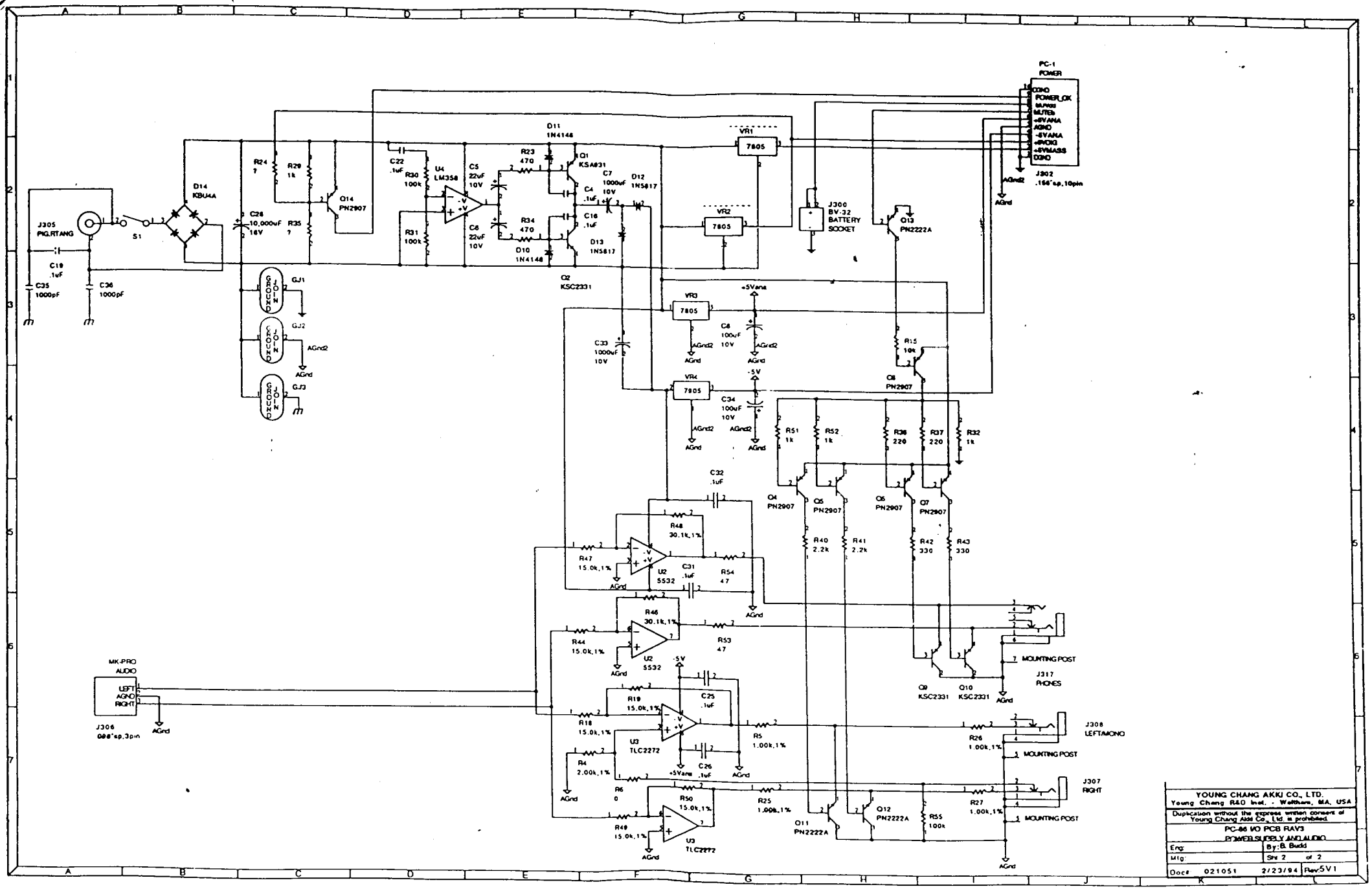
PC-1
POWER
J302
.156"sp,10pin
J300
BV-32
BATTERY
SOCKET
J305
PIG.RT.ANG
S1
D14
KBU4A
VR1
7805
VR2
7805
VR3
7805
VR4
7805
+5Vana
-5V
AGnd
AGnd2
GJ1
GJ2
GJ3
Q1
KSA831
Q2
KSC2331
Q13
PN2222A
Q14
PN2907
Q4
PN2907
Q5
PN2907
Q6
PN2907
Q7
PN2907
Q8
PN2907
Q9
KSC2331
Q10
KSC2331
Q11
PN2222A
Q12
PN2222A
U2
5532
U3
TLC2272
U4
LM358
D10
1N4148
D11
1N4148
D12
1N5817
D13
1N5817
J306
.098"sp,3pin
MK-PRO
AUDIO
LEFT
AGND
RIGHT
J308
LEFT/MONO
J307
RIGHT
J317
PHONES
MOUNTING POST
YOUNG CHANG AKKI CO., LTD.
Young Chang R&D Inst. - Waltham, MA, USA
Duplication without the express written consent of Young Chang Akki Co., Ltd. is prohibited.
PC-86 I/O PCB RAV3
POWER SUPPLY AND AUDIO
Eng:
By: B. Budd
Mfg:
Sht 2 of 2
Docs 021051
2/23/94
Rev 5V1

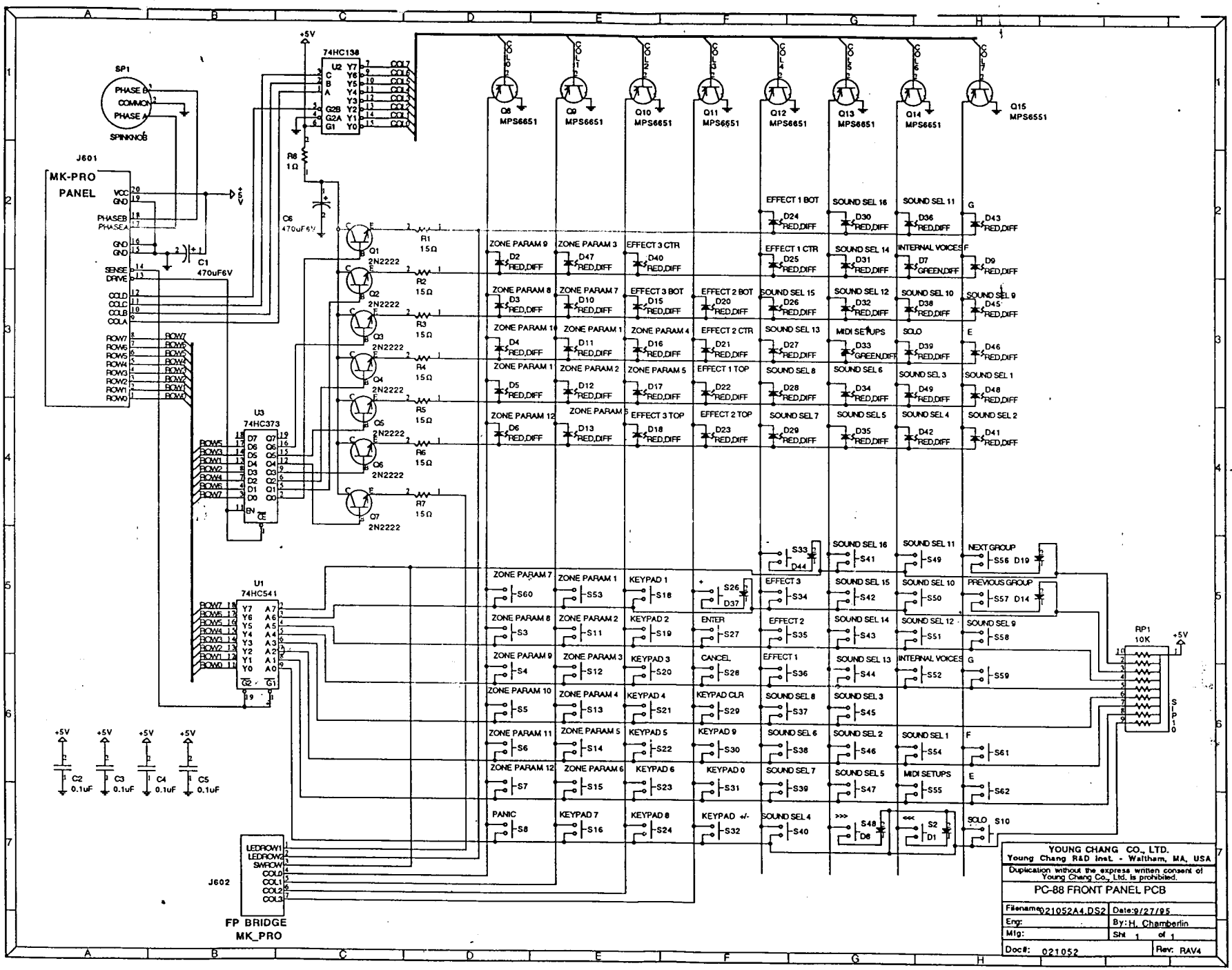

강산도면
1995. 12. 11
전자개발
영창악기주식회사

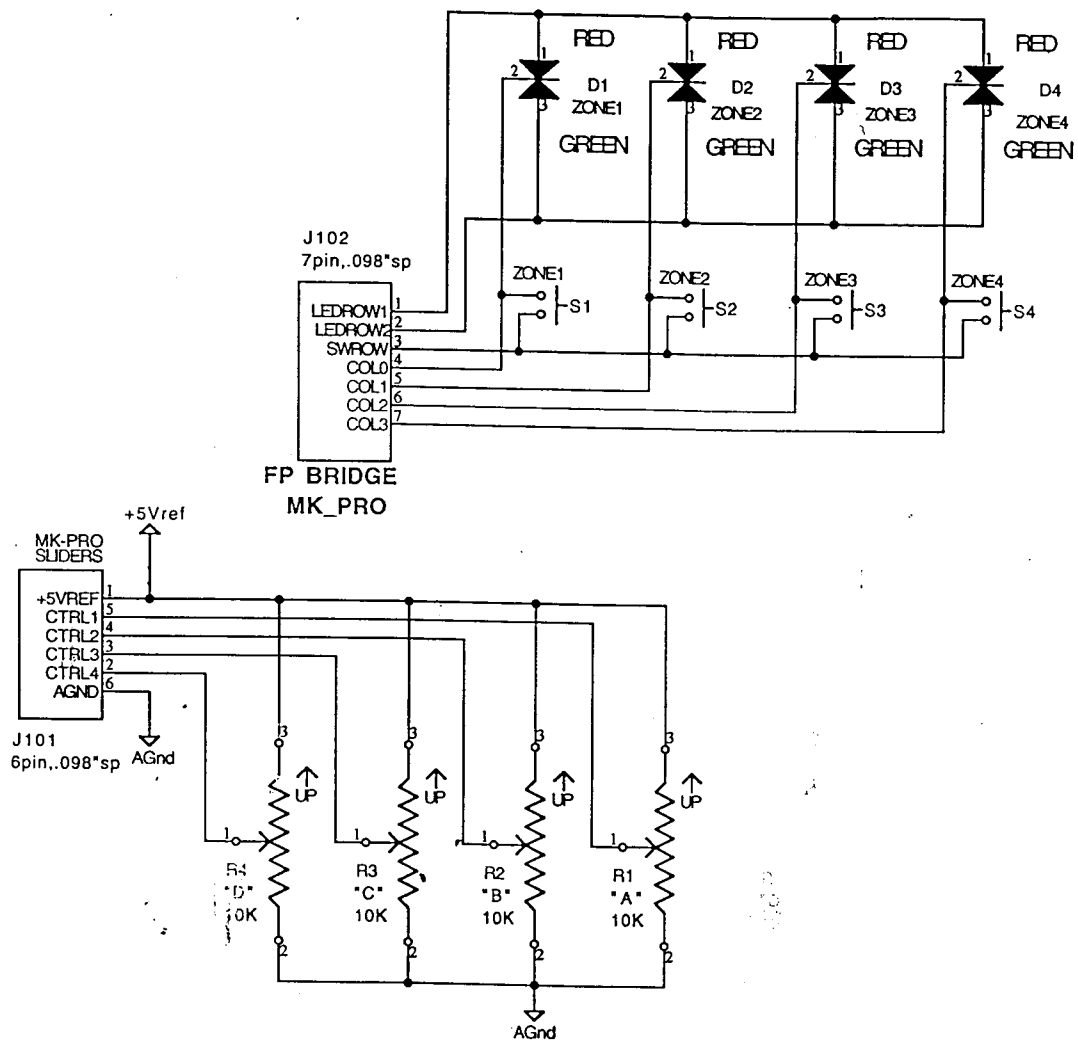

양산도면
1995. 12 1 1
전자개발
행정학기주식회사

YOUNG CHANG CO., LTD. Young Chang R&D Inst. - Waltham, MA, USA	
Duplication without the express written consent of Young Chang Co., Ltd. is prohibited.	
PC-88 SLIDER PCB	
Filename 021053A1.DS2	Date 9/27/95
Eng:	By H. Chamberlin
Mfg:	Sht 1 of 1
Doc#: 021053	Rev: RAV1

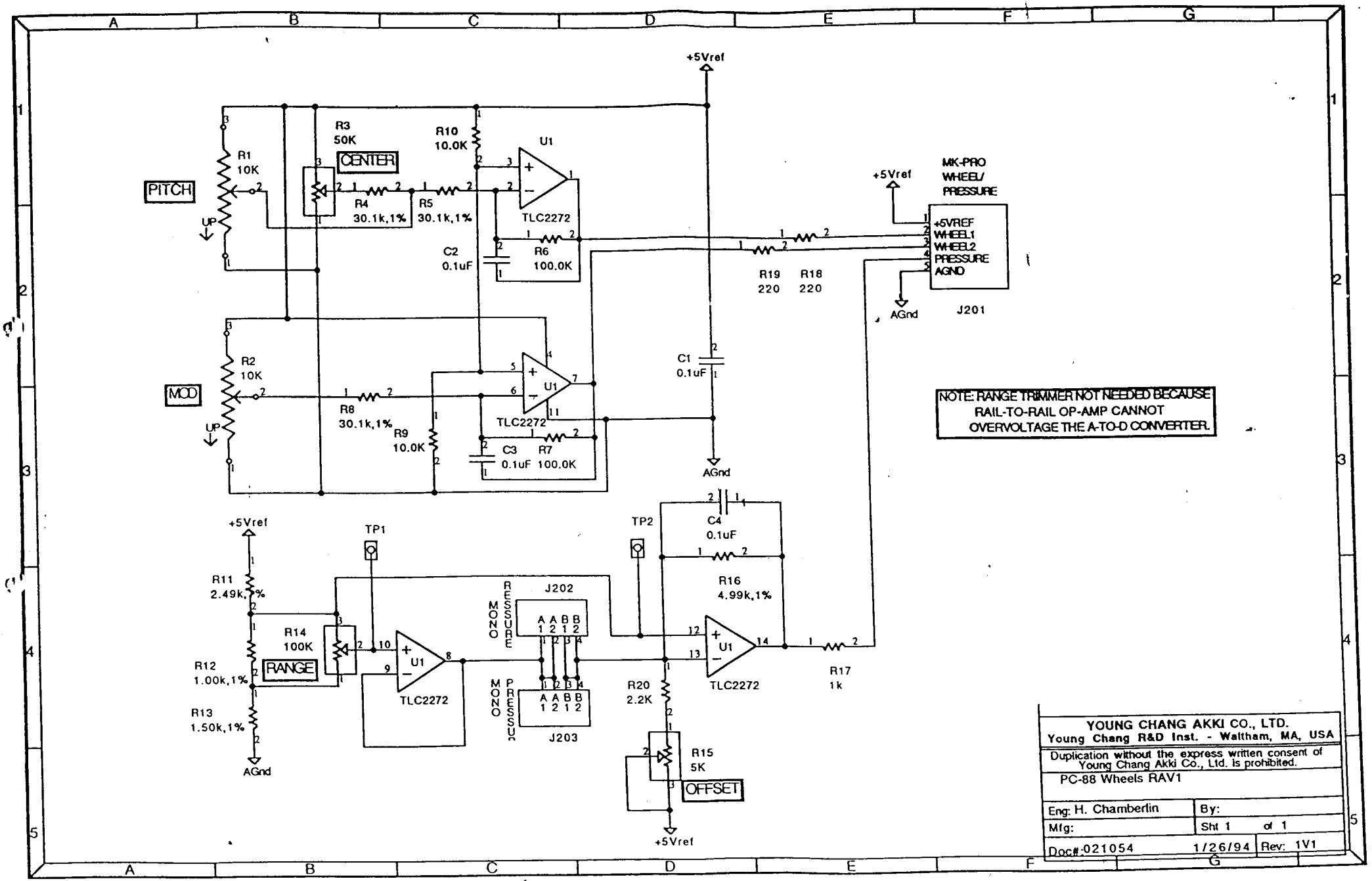
+5Vref
R1
10K
PITCH
UP
R3
50K
CENTER
R4
30.1k,1%
R5
30.1k,1%
R10
10.0K
U1
TLC2272
C2
0.1uF
R6
100.0K
+5Vref
MK-PRO
WHEEL/
PRESSURE
+5VREF
WHEEL1
WHEEL2
PRESSURE
AGND
J201
R19
220
R18
220
AGnd
R2
10K
MOD
UP
R8
30.1k,1%
R9
10.0K
C3
0.1uF
R7
100.0K
C1
0.1uF
AGnd
NOTE: RANGE TRIMMER NOT NEEDED BECAUSE
RAIL-TO-RAIL OP-AMP CANNOT
OVERVOLTAGE THE A-TO-D CONVERTER.
+5Vref
R11
2.49k,1%
R14
100K
RANGE
R12
1.00k,1%
R13
1.50k,1%
AGnd
TP1
U1
TLC2272
MONO PRESSURE
J202
A A B B
1 2 1 2
MONO PRESSURE
J203
A A B B
1 2 1 2
TP2
C4
0.1uF
R16
4.99k,1%
U1
TLC2272
R17
1k
R20
2.2K
R15
5K
OFFSET
+5Vref
YOUNG CHANG AKKI CO., LTD.
Young Chang R&D Inst. - Waltham, MA, USA
Duplication without the express written consent of Young Chang Akki Co., Ltd. is prohibited.
PC-88 Wheels RAV1
Eng: H. Chamberlin
By:
Mfg:
Sht 1 of 1
Doc#:021054
1/26/94
Rev: 1V1