METHOD OF ADJUSTMENT FOR PS-3200

NB: The method of adjustment described below should be employed only in cases of repair.

Reasons-(a)

Please follow the instructions in the owner's manual as the settings have been accurately made and adjustments cannot be made without special measuring equipment.

Reasons-(b)

Please carry out regular checks according to the owner's manual.

****

As for adjustment to the programmer, please refer to section 1 Programmer of the owner's manual.

The method of adjustment described below for the PS-3200 may also be referred to for the models of PS-3300 and PS-3100.

Points marked with the symbol * are points which required checking on the PS-3300 and PS-3100.

1. VOLTAGE CHECK

a.

	ADJUSTMENT VR NO.	DIGITAL VOLTAGE METER	TOLERANCE
+15V	KLM-65 --- 1	KLM-65 --- 6	+15.00V
-15V	" --- 2	" --- 3	-15.00V
VD+15V		" --- 7	+14.00V ~ 14.80V
VD-15V		" --- 2	-14.00V ~ 14.80V
+10V		" --- 5	+9.70V ~ 10.30V

b. Program/Control Voltage Check

Setting: Terminal 23 in KLM-152 - Oscilloscope

Check (1) 0V - when the Programmer CANCEL on
Check (2) 15V - when the Programmer 1 16 on

2. TEMPERAMENT ADJUSTMENT

Adjustment 1

Settings - 1

Direct out - WT-10A
SG 2 Wave Form - off
SG 1 Scale - 8'
Temperament - all at "0"
Total Tune - 0

Check that 12 tones key C through B match in pitch.

In case of defect, please adjust VR16 ~ 11 of KLM-64(1) and VR16 ~ 11 of KLM-64(2). (Fig-1)

In case of defect on Adjustment 1 or Total FM Intensity, please adjust in the following order.

Note: In case other than repair, do not attempt further Adjustment 2.

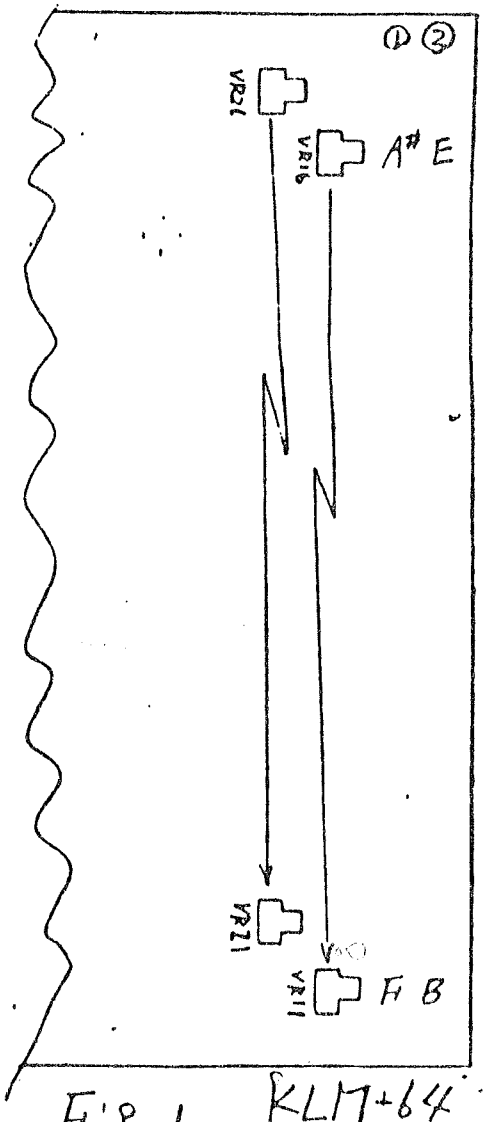

Fig-1 KLM-64

Adjustment 2 (SG 1 Total Tune)

Settings - 2

VP-Junction ——— Digital Volt Meter
Mod. Total Freq.

External Total Mod. Intensity - 10
Key A# - ON
Settings-1 - Same as they are.

Adjust VR303 of KLM-147 so that a reading of 0 cent is produced. (*VR401 of KLM-62)

Adjustment 3

Turn VR of Limiter B clockwise and stop at 1 octave.

Digital Volt Meter reading +900mV ~ 1.00V

Adjustment 4 (Linearity)

Adjust VR304 of KLM-147 when Reverse Switch is on. (*VR402 of KLM-62) (Please repeat Adjustment 2, 3, 4 several times) (Fig-2)

Note: In case of Adjustment 5, do not touch KLM-147 VRs or VPs.

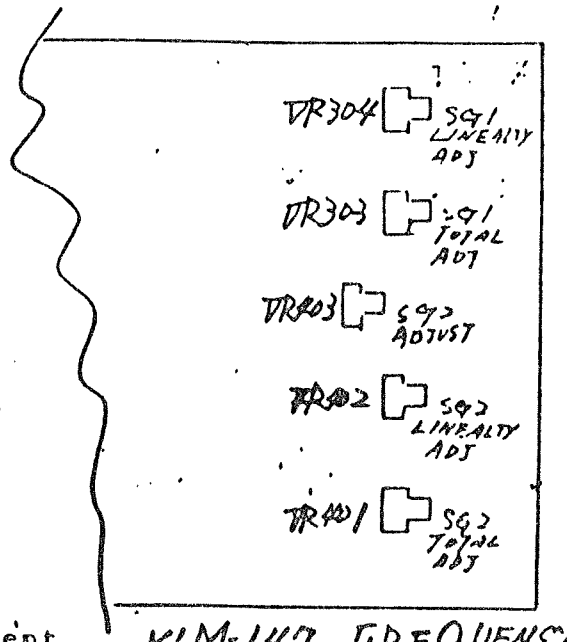

KLM-147 FREQUENCY CONTROLER

Fig - 2

Adjustment 5

Moduration SW - off Key - A

Adjust VR15 of KLM-64(1) and then adjust VR25 of KLM-64(1). (Please repeat this adjustment several times.) See Fig-1.

Please do the same method of Adjustment 5 Key G# through B.

Please do the same method of SG-1 for SG-2 adjustment.

3. WAVE FORM ADJUSTMENT

3-1. SG-1 Wave Form Adjustment

Settings: SG-2 - off
Oscilloscope - Terminal No. 23 of KLM-69

Check : Turn the Wave Form Control on the Panel until the Wave Form on the panel chart is produced exactly.

TRI ∧ Adjustment (SG-1)

Adjust VR1 of KLM-147

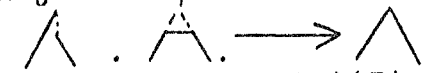

(*VR101 of KLM-63)(Fig-3)

3-2. SG-2 Wave Form Adjustment

Setting : SG-1 - off
(PWM - Adding Amp.
- 10V)

Check : Turn the Wave Form Control on the Panel until the Wave Form on the Panel chart is produced exactly.

TRI ∧ Adjustment (SG-2)

Adjust VR101 of KLM-147



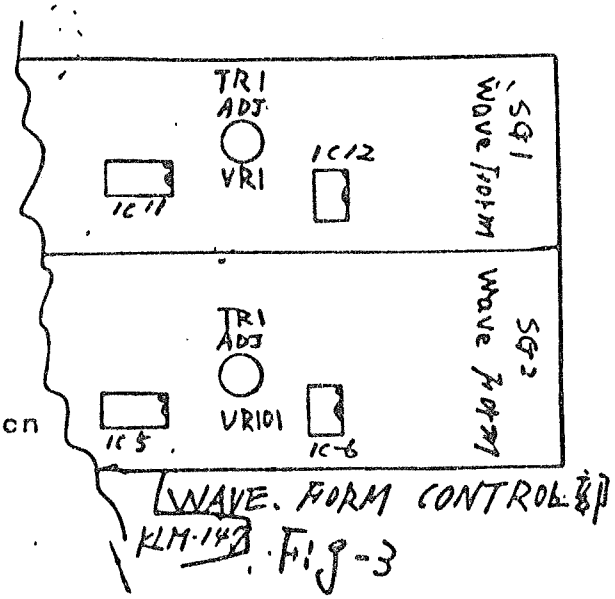

WAVE. FORM CONTROL 部
KLM-147 Fig-3

4. PULSE WIDTH MODULATION CHECK

Settings: Oscilloscope -
No. 27 of KLM-147
Intensity - 0

Intensity - 10
Speed - 0
(T is 0.3 Hz or less)
Speed - 10
(T is 10 Hz or more)

T Adjustment - Adjust VR201 of KLM-147.
(Fig-4)

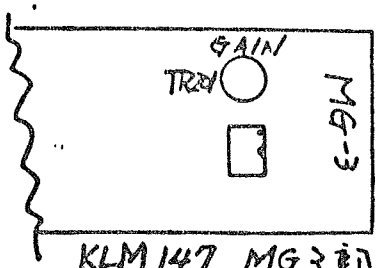

KLM147 MG3部
fig-4

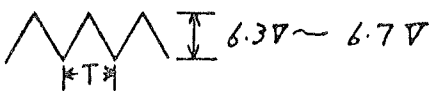

DYNAMIC LP FILTER CHECK

5-1. Cut off Frequency

Settings:

Oscilloscope	- No.43 of KLM-69(2)
Wave Form	-
Cut off	- 5
Peak	- 10
KBD Filter Blance	- 0
Expand	- 0
Key	- F3

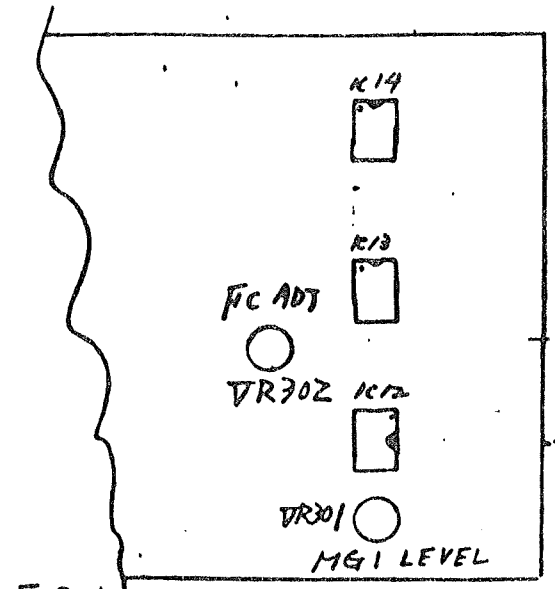

Fig-5: KLM148 FILTER CONB

Adjustment

Adjust VR302 of KLM-148 until fc reaches at 5 KHz.
(*VR1 of KLM-63)

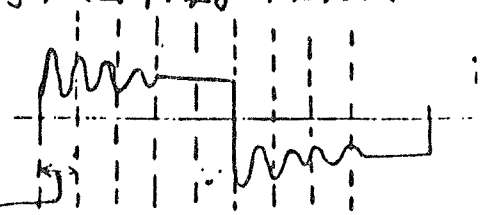

20 mV/0.2 mS

5-2. Peak

PEAK-0



PEAK-10

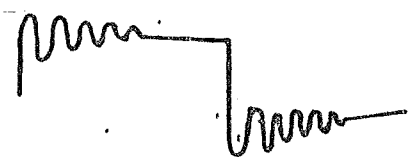

6. KEYBOARD VOLUME BALANCE

Press Key E4 and check by listening that there is a change volume when rotating Keyboard V.B. Then press Key F1 and check that reverse of the above occurs. In case of defect, please adjust in the following order.

Oscilloscope - No. 19 of KLM-149

Adjustment 1

Set KBD Volume Balance to -5 and adjust VR102 of KLM-149 so that a reading of 0.6 VP-P is produced when pressing Key F1.

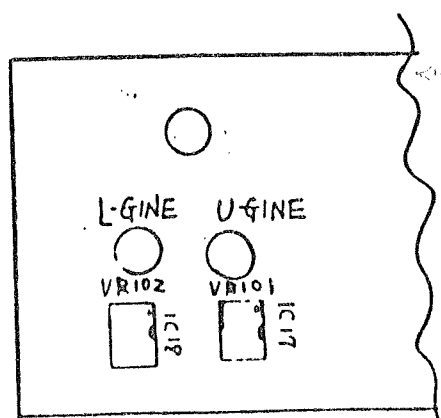

Fig-6 KLM-149

Adjustment 2

Set KBD Volume Balance to +5 and adjust VR101 of KLM-149 so that a reading of 0.6VP-P is produced when pressing Key E4. (Fig-6)

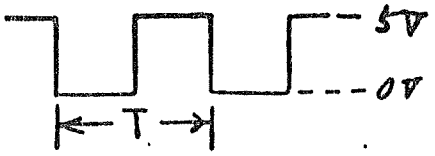

7. S/H CHECK

7-1. Clock Frequency

Oscilloscope - Clock out
(*S/H out)

Clock Freq. at setting 10, T is 50 msec. or less

" at setting 5, T is 0.4 ~ 0.5 sec

" at setting 0, T is 5 sec. or more.

In case of defect, please adjust VR301 of KLM-146 (*VR1 of KLM-76) (Fig-7)

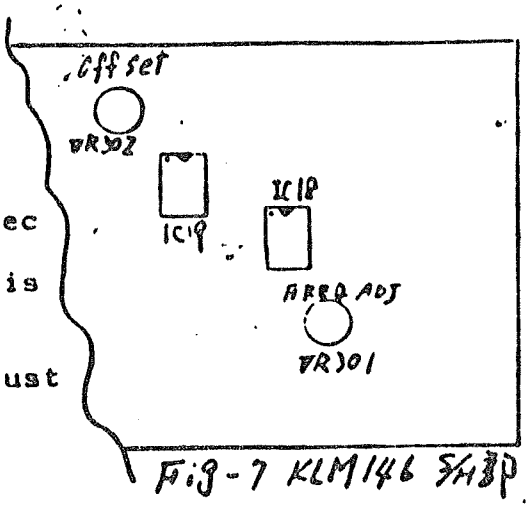

Fig-7 KLM146 S/H BP

7-2. S/H Off Set

Take S/H IN to GND and with the CLOCK setting at 10, ensure that you obtain a reading of ±2mV at S/H OUT.

In case of defect, please adjust VR302.(*VR2)

8. MG1 CHECK

8-1. Frequency ——— 

Oscilloscope - MG1 out

Freq. 0 → 0.1 Hz or less (Cycle T > 10 sec.)

Freq. 10 → 100 Hz or more (Cycle T < 10m sec.)

In case of defect, please adjust VR101 of KLM-146. (*VR201 of KLM-63) (Fig-8)

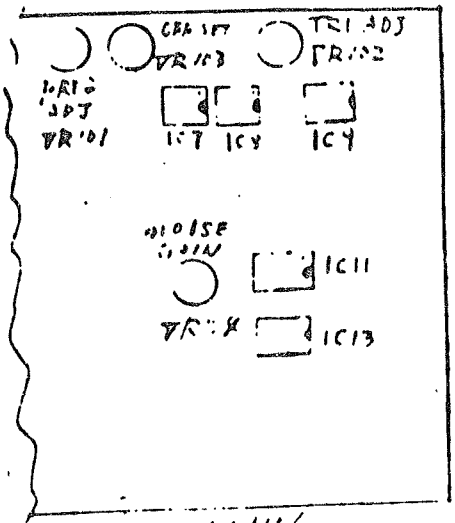

Fig-8 KLM146

8-2. Wave Form

WAVE FORM	WAVE FORM OF OSCILLOSCOPE	ADJUSTMENT
TRI	2.1~2.6V 2.1~2.6V	KLM-146 VR102, 103
SAW		
SAW		
REC		
PINK NOISE	5V	
WHITE NOISE	5V	KLM-146 VR104

*KLM-63 VR302, 303

*KLM-63 VR304

9. AMPLITUDE MODULATOR CHECK

Settings:

Oscilloscope - No. 15 Pin of KLM-149
(*No. 26 Pin of KLM-62)

SG-1 - 2'∧
Freq. of MG 1 - at 10
Key - E4

AM 0	AM 4-6	AM 10
A1	A2, T1	A3, T2, $T_2=\frac{T_1}{2}$

In case that T1 and T2 are no good, please adjust VR301, VR302 and VR304 of KLM-149. (*VR301, 302 and 303 of KLM-62)

In case that A2 and A3 are defective, please adjust at following setting.

Key - E2

AM - at 0 = VR305 (0.3VP-P)

AM - at 10 = VR306 (")

Note: Sound leakage should be adjusted with VR303 at AM 10. (*VR304) (Fig-9)

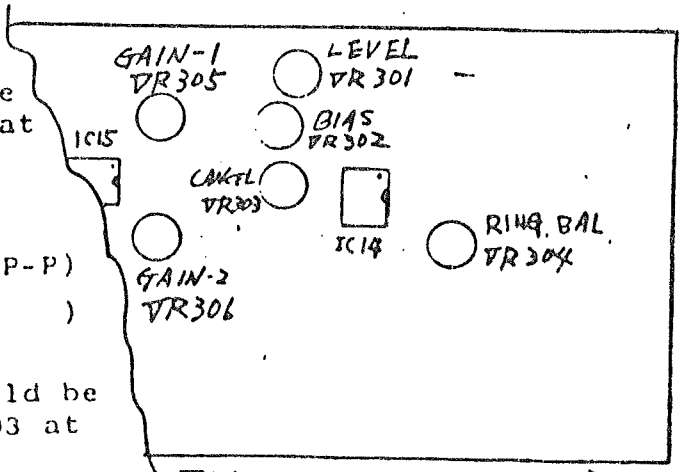

Fig-9 KLM 149 AMBP

GEG CHECK

Oscilloscope - GEG OUT

CHECK 1

Delay - 0
Attack - 0
Release - 0
Auto - off
KBD. Trig Out-
Trigin

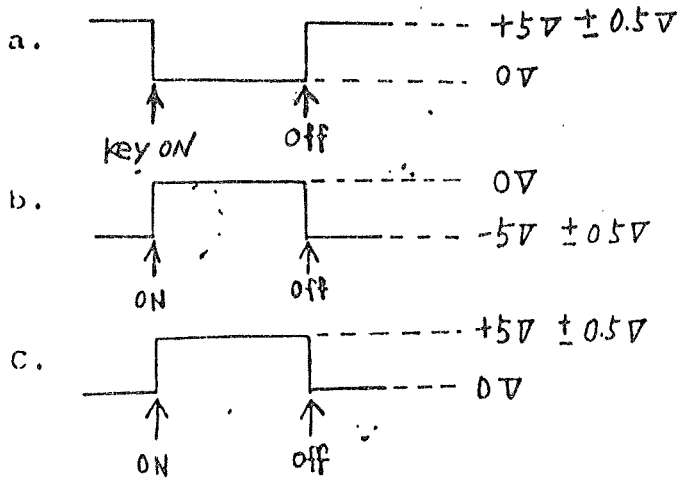

CHECK 2

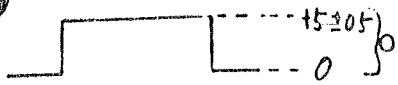

<->SG 1 EXT FREQ. CONT.

Set EXT INTENSITY CONTROL at 10, and pressing one key check that pitch does not change when you switch FREQ. MOD. SW. ON-OFF.

In case of defect, please adjust VR104 of KLM-76. (Fig-10)

CHECK 3

"DELAY"

Set DELAY at 10, and check TD.

In case of defect, please adjust VR101 of KLM-76.

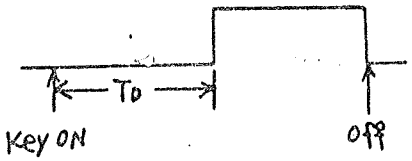

$9 < T_D < 11$ Sec

"ATTACK"

Set ATTACK at 10, and check TA.

In case of no good work, please adjust VR102 of KLM-76.

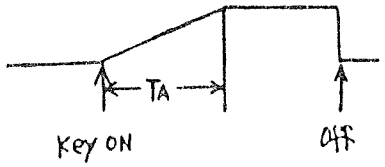

$9 < T_A < 11$ Sec

"AUTO"

Set DELAY at 7, ATTACK at 7, RELEASE at 7, and switch AUTO SW ON, check that it works as following picture.

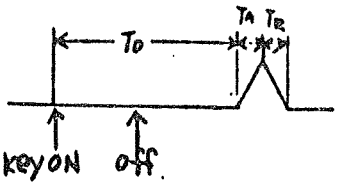

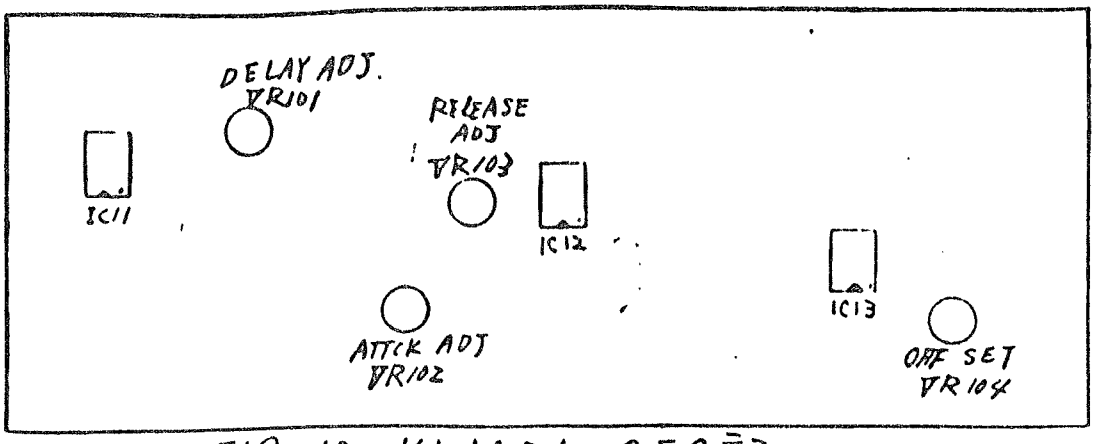

Fig-10 KLM 76 GEGEB

11. ADDING AMP. ADJUSTMENT

IN-1	IN-2	LEVEL-1	VEVEL-2	OUT
OPEN	OPEN	0	0	0V
〃	〃	X2	0	+10.0V ~ 11.0V
〃	〃	0	X2	−10.0V ~ 11.0V
+5V	〃	X2	0	+10.0V ~ 11.0V
OPEN	+5	0	X2	+10.0V ~ 11.0V

In case of no good function, please adjust with VR401 of KLM-150 until OFF SET Voltage reaches at 0V. (Fig-11)

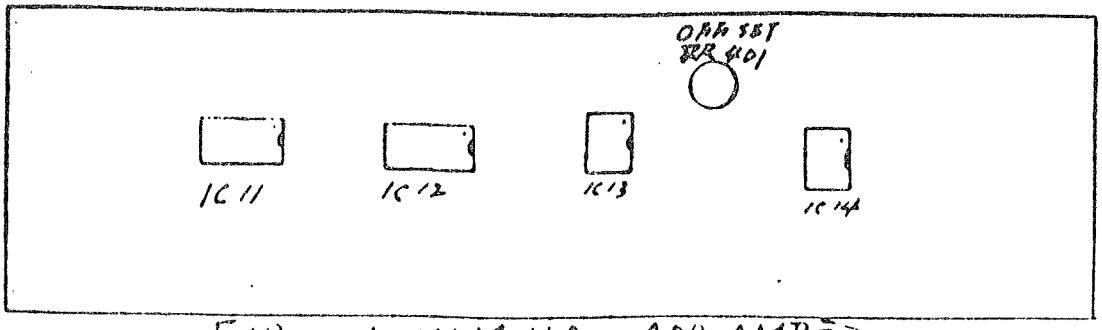

Fig-11 KLM 150 ADD AMPEB

PS-3200

* Programmer Trouble Check

SIGNAL	CIRCUIT BOARD PIN NO	SYNCHROSCOPE	
CLOCK	KLM-152 (34)		5V/cm 0.5ms/cm
IA 1	KLM-151~3 (40)	(8ms) T 	5V/cm 10ms/cm
IA 2	KLM-151~3 (41)	(16ms) 2T 	〃
IA 3	KLM-151~3 (42)	(32ms) 4T 	〃
IA 4	KLM-151~3 (43)	(64ms) 8T 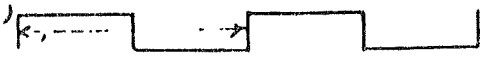	〃
IA 5	KLM-151~3 (44)	(128ms) 16T 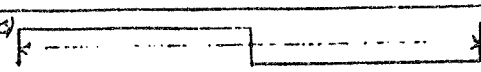	〃
AD START	KLM 151 (6)	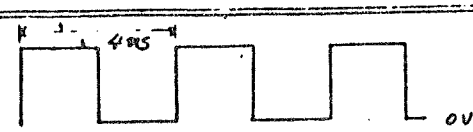	5V/cm 1ms/cm
DATA LATCH	KLM 153 (6)	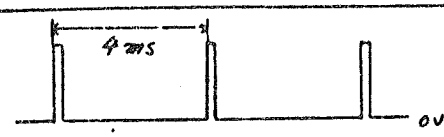	〃
HOLD	KLM 153 (39)	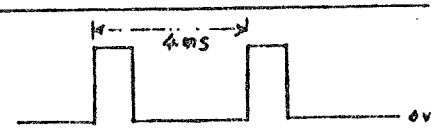	〃

P/C (Program Cancel)	
PUSH BUTTON	KLM-152 (23)
CANCEL	L
1~16	H

WRITE	
PUSH BUTTON WRITE	KLM-152 (10)
	L
	H

* MEMORY PROTECT = OFF

H = +15V
L = 0V

PS (Program Select)	PS 1	PS 2
PUSH BUTTON 1~16	KLM-152 (8)	KLM-152 (11)
	H	L
	L	H

MODEL PS-3200 Programmer Trouble Check	
DRAWN BY M. Yokomaku 1978-10-12	DWG. NO.

PS-3200 PC BOARD DIAGRAM.

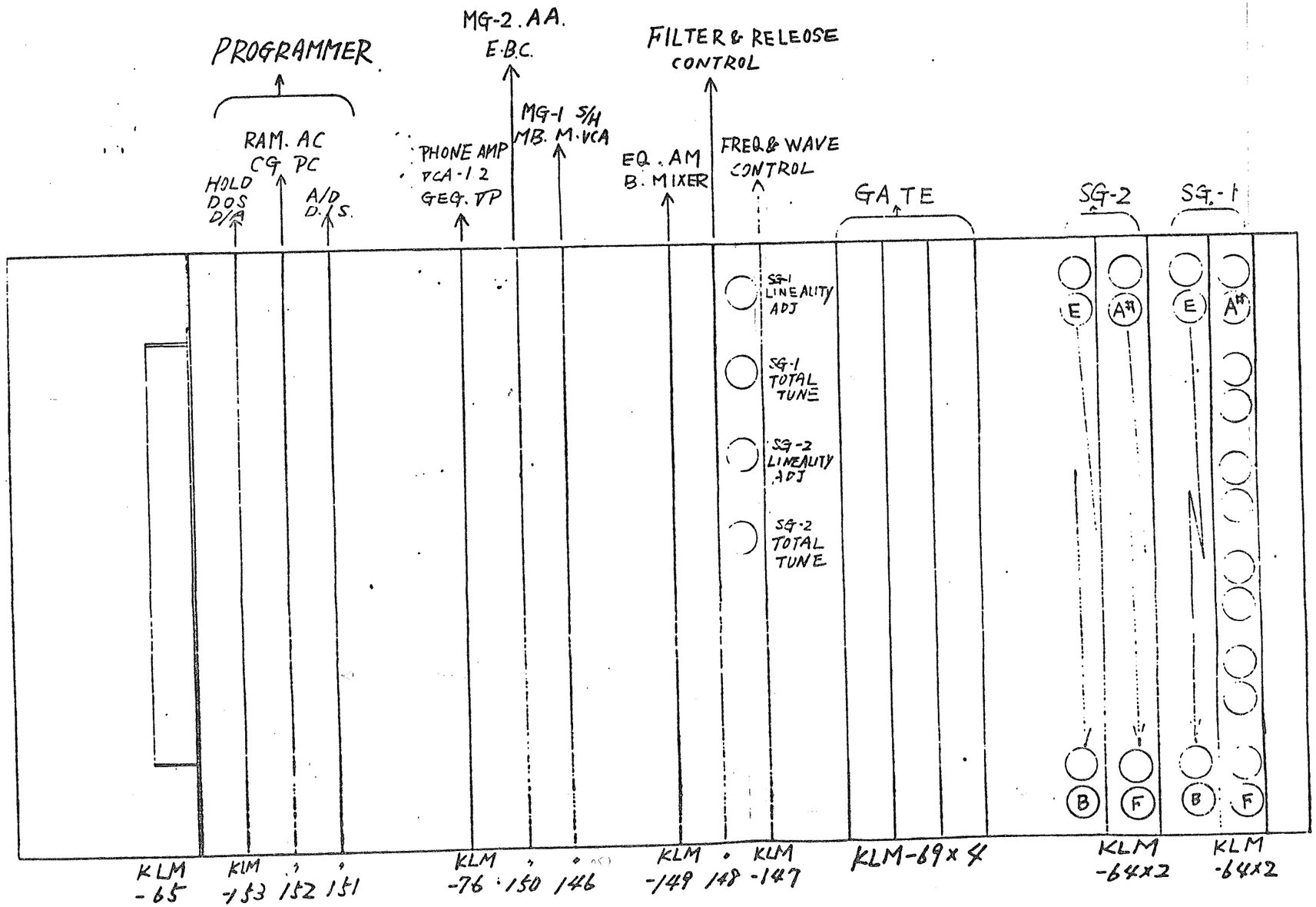

SG Signal Generator
EQ. Equalizer.
AM Amplitude Modulator
B Mixer Balance Mixer.
S/H Sample & Hold.
MG Modulation Generetor
MB Modulation Balance
M.VCA Modulation V.C.A.
AA. Adding AMP.
EBC Ensemble Balance Control
GEG General Envelope Generator

DIS Data Inpt Scanner
AC Address Counter
CG Clock Generetor
PC Programmer Control
DOS Data Output Scanner

* ADDRESS CHART

PA
(Program Address)

PUSH BUTTON	PA4 (8)	PA3 (4)	PA2 (2)	PA1 (1)
1	0	0	0	0
2	0	0	0	1
3	0	0	1	0
4	0	0	1	1
5	0	1	0	0
6	0	1	0	1
7	0	1	1	0
8	0	1	1	1
9	1	0	0	0
10	1	0	0	1
11	1	0	1	0
12	1	0	1	1
13	1	1	0	0
14	1	1	0	1
15	1	1	1	0
16	1	1	1	1

NOTICE (1)
"1" = "H" = +15V
"0" = "L" = 0V

IA
(Item Address)

KNOB	PI or PO NUMBER	IA5 (16)	IA4 (8)	IA3 (4)	IA2 (2)	IA1 (1)
SG1 WAVE FORM	#1	0	0	0	0	0
SG1 SCALE	#2	0	0	0	0	1
SG2 WAVE FORM	#3	0	0	0	1	0
SG2 SCALE	#4	0	0	0	1	1
SG2 FREQUENCY	#5	0	0	1	0	0
TOTAL PWM SPEED	#6	0	0	1	0	1
TOTAL PWM INTENSITY	#7	0	0	1	1	0
TOTAL FREQ MOD INT.	#8	0	0	1	1	1
DLPF CUTOFF FREQ	#9	0	1	0	0	0
DLPF PEAK	#10	0	1	0	0	1
DLPF KBD FILT BAL	#11	0	1	0	1	0
DLPF EXPAND	#12	0	1	0	1	1
DLPF MOD INTEN.	#13	0	1	1	0	0
EM. ATTACK TIME	#14	0	1	1	0	1
EM DECAY TIME	#15	0	1	1	1	0
EM SUSTAIN LEVEL	#16	0	1	1	1	1
EM RELEASE TIME	#17	1	0	0	0	0
EQ 8KHz	#18	1	0	0	0	1
EQ 4KHz	#19	1	0	0	1	0
EQ 2KHz	#20	1	0	0	1	1
EQ 1KHz	#21	1	0	1	0	0
EQ 500Hz	#22	1	0	1	0	1
EQ 250Hz	#23	1	0	1	1	0
EQ 125Hz	#24	1	0	1	1	1
AMPLITUDE MODULATOR	#25	1	1	0	0	0
KBD VOL BAL	#26	1	1	0	0	1
MG1 WAVE FORM	#27	1	1	0	1	0
MG1 FREQUENCY	#28	1	1	0	1	1
S/H CLOCK	#29	1	1	1	0	0
MODULATION BAL	#30	1	1	1	0	1
ENSEMBLE	#31	1	1	1	1	0
PRESET VOLUME	#32	1	1	1	1	1

* DATA CHART

DAC
ADC

ANALOG DATA	DIGITAL DATA							
	DI 8 OR DO 8	DI 7 DO 7	DI 6 DO 6	DI 5 DO 5	DI 4 DO 4	DI 3 DO 3	DI 2 DO 2	DI 1 DO 1
0.0000V	0	0	0	0	0	0	0	0
0.0392	0	0	0	0	0	0	0	1
0.1176	0	0	0	0	0	0	1	1
0.2745	0	0	0	0	0	1	1	1
0.5882	0	0	0	0	1	1	1	1
1.2156	0	0	0	1	1	1	1	1
2.4705	0	0	1	1	1	1	1	1
4.9803	0	1	1	1	1	1	1	1
10.0000 V	1	1	1	1	1	1	1	1

NOTICE (2)
"1" = "H" = +5V
"0" = "L" = 0V

MODEL PS-3200
ADDRESS & DATA CHART

DRAWN BY	DWG NO.
M. Yokoyama 1978-12-12	KOD-A40050

X-803-1

PROGRAMMER TIMING CHART (II)

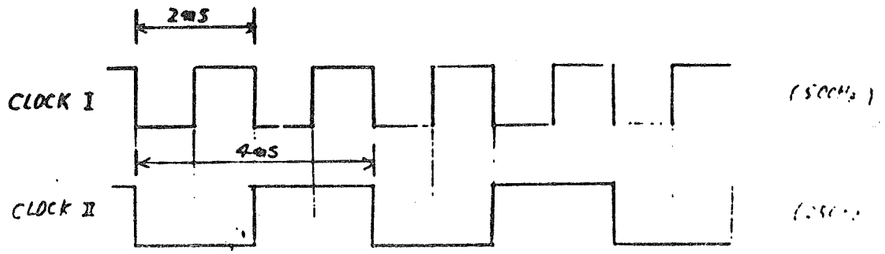

WRITE MODE

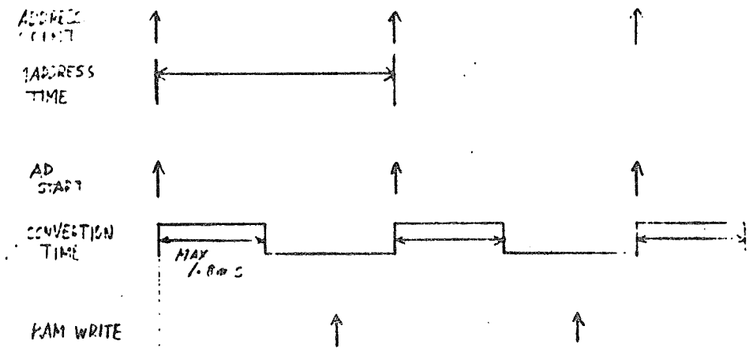

READ MODE

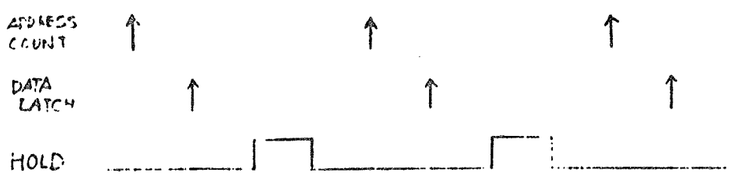

ONE CYCLE : 4mS x 32 = 128mS

MODEL PS-3200 PROGRAMMER TIMING CHART (II)		DWG NUMBER
DATE 1978-7-17	DRAWN BY M. Yokozeki	KOD-A40079

X-803-P

PROGRAMMER TIMING CHART (1)

WRITE MODE

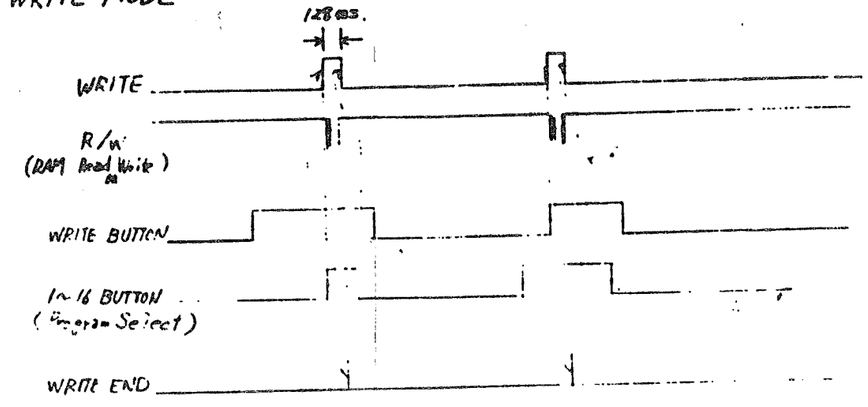

READ MODE

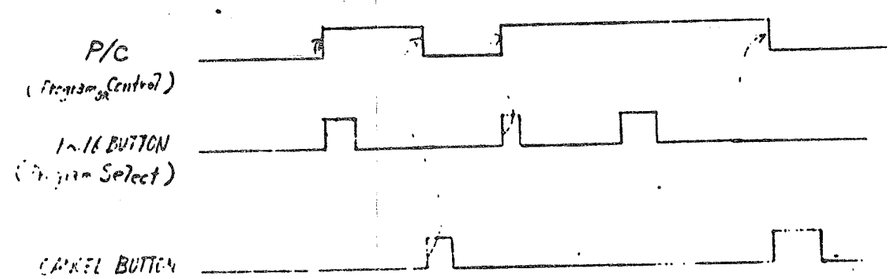

MODEL PS-3200 PROGRAMMER TIMING CHART (I)		DWG NUMBER
DATE 1978-7-14	DRAWN BY M. Yokozeki	KOD-A40078

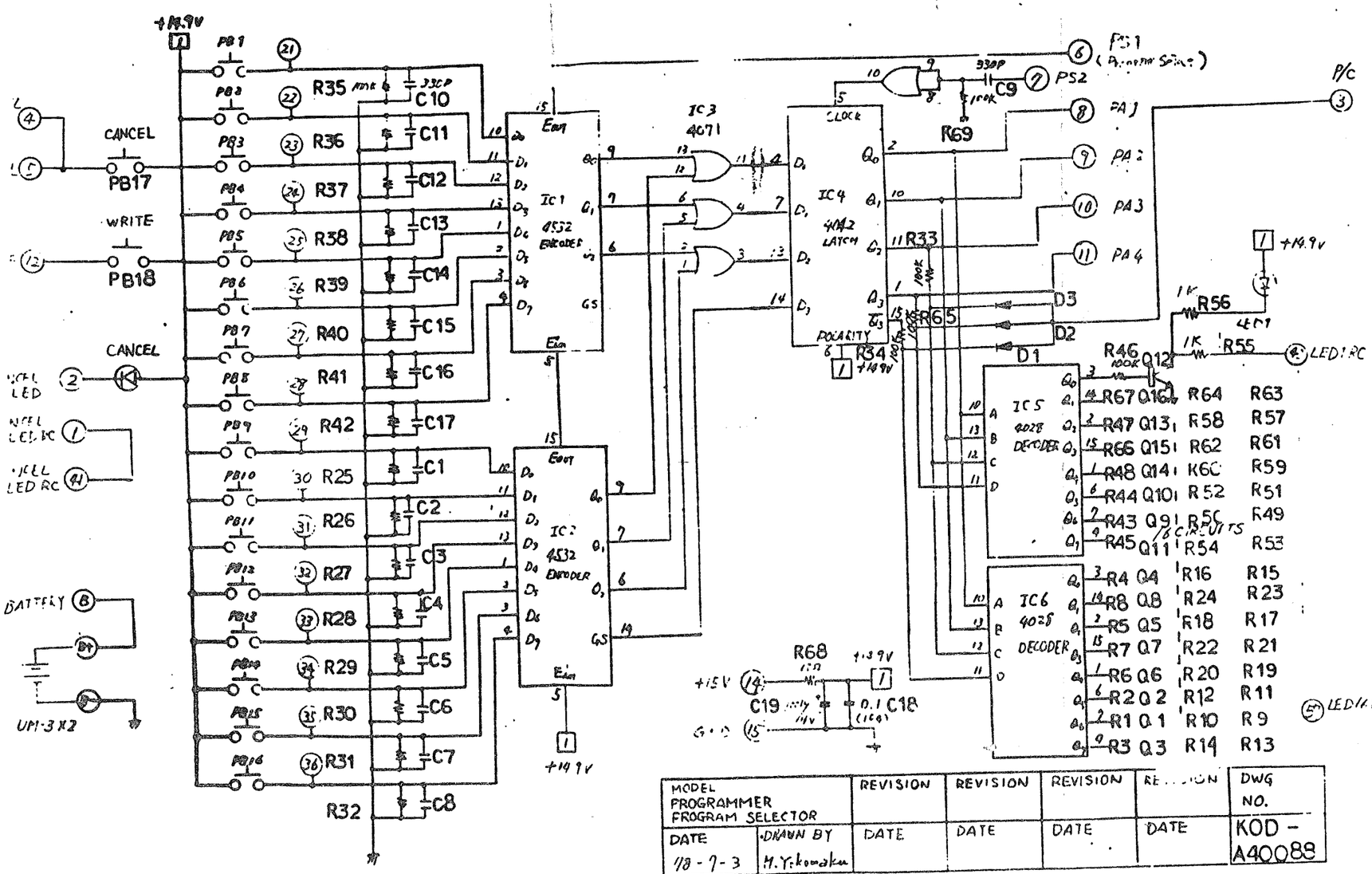

MODEL PROGRAMMER PROGRAM SELECTOR		REVISION	REVISION	REVISION	REVISION	DWG NO.
DATE 18-7-3	DRAWN BY M.Y.komaku	DATE	DATE	DATE	DATE	KOD-A40088

KLM-154

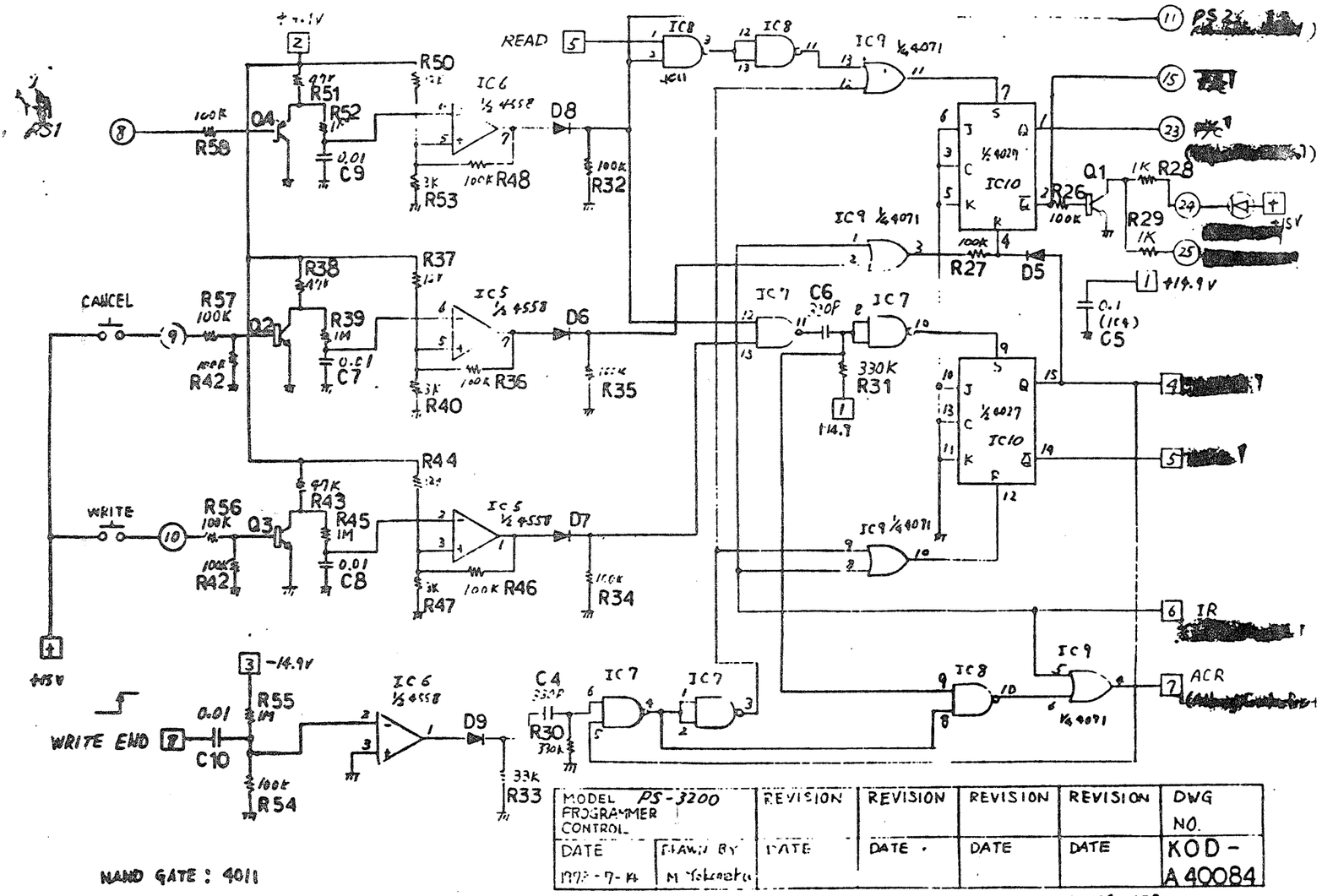

MODEL PS-3200 PROGRAMMER CONTROL		REVISION	REVISION	REVISION	REVISION	DWG NO.
DATE 1978-7-14	DRAWN BY M. Yokomaku	DATE	DATE	DATE	DATE	KOD-A40084

NAND GATE : 4011

KLM-152

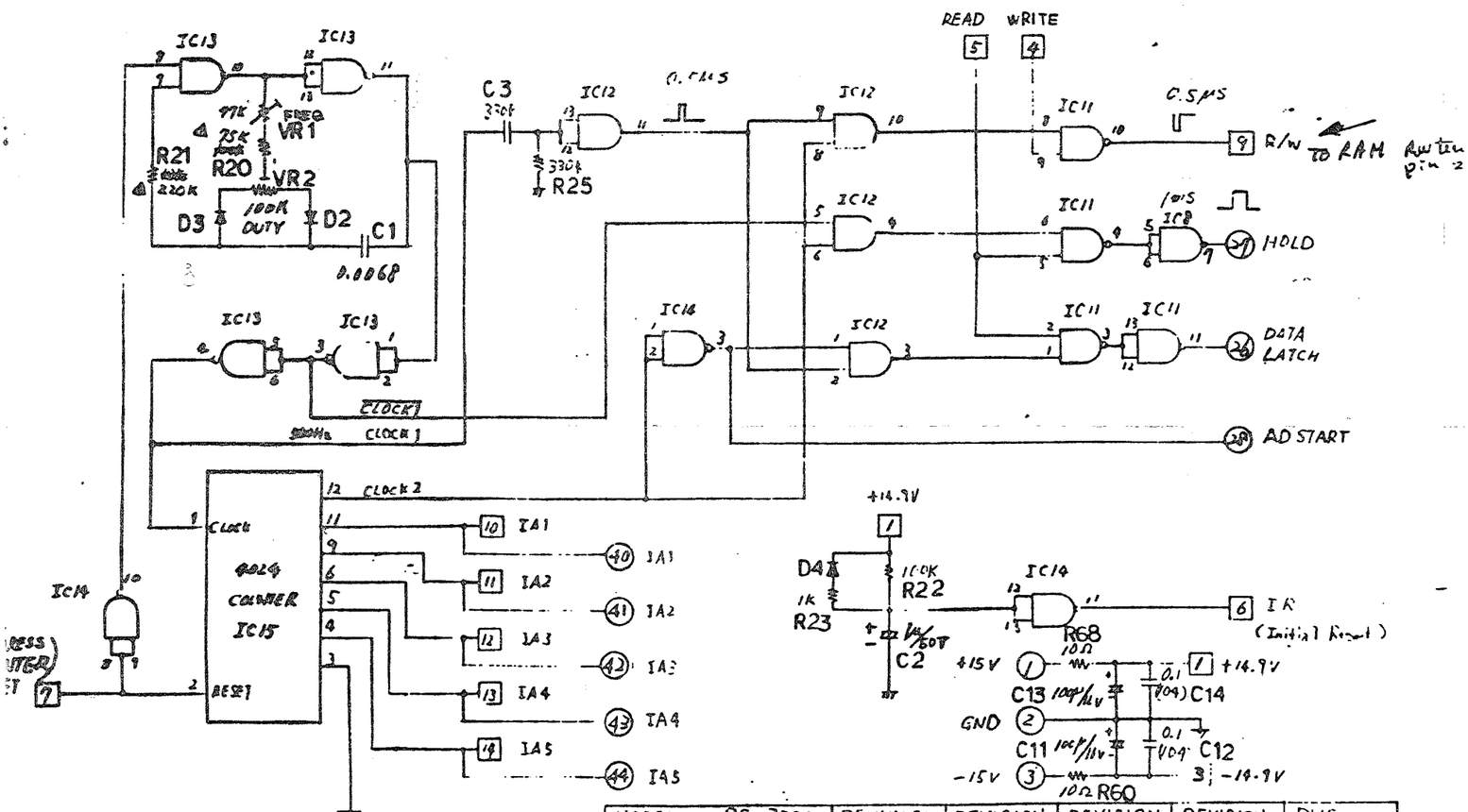

MODEL PS-3200 PROGRAMMER ADDRESS COUNT, CLOCK, etc		REVISION 4	REVISION	REVISION	REVISION	DWG NO.
DATE 1978-7-13	DRAWN BY M. Yokomaku	DATE 1979-1-18	DATE	DATE	DATE	KOD-A40085

GATE IC12 — 4081
AND GATE : 4011

KLM-152

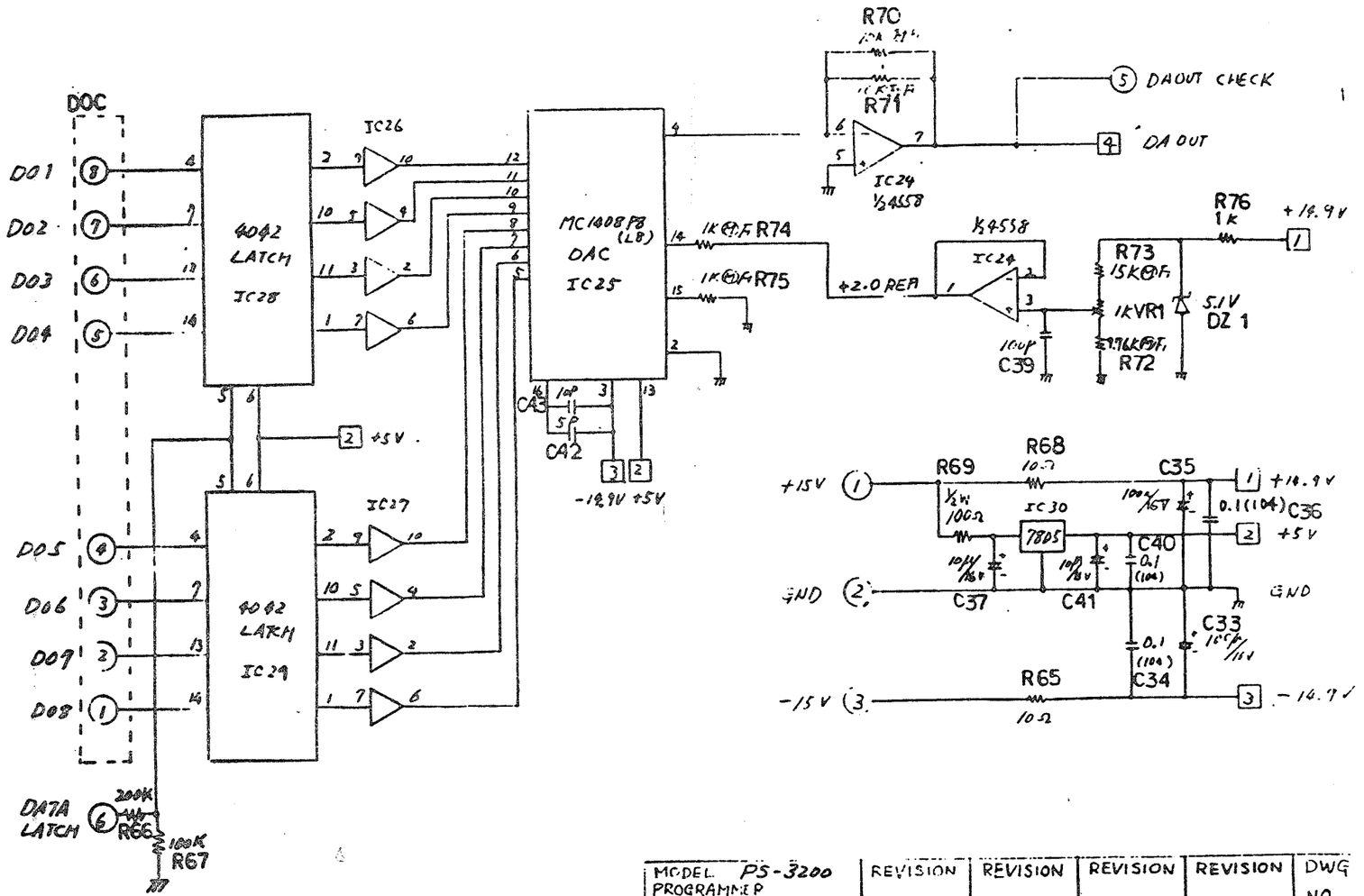

MODEL PS-3200 PROGRAMMER D/A CONVERTER		REVISION	REVISION	REVISION	REVISION	DWG NO.
DATE 78-8-3	DRAWN BY M. Yokoseki	DATE	DATE	DATE	DATE	KOD A400

KLM-15

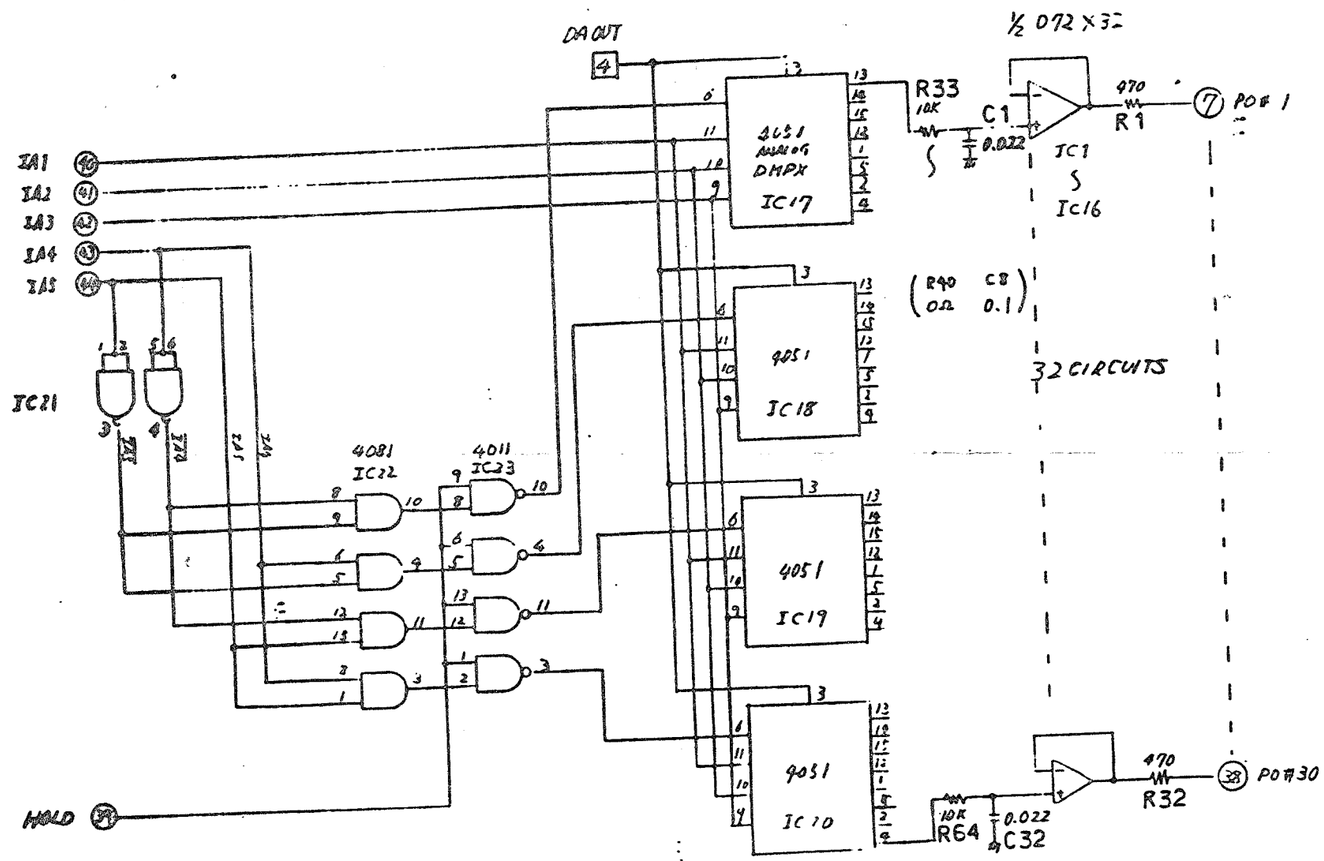

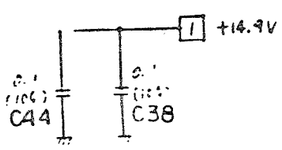

MODEL PS-3200 PROGRAMMER OUTPUT SCANNER AND HOLD		REVISION	REVISION	REVISION	REVISION	DWG NO.
DATE 78-7-6	DRAWN BY M Yokoseki	DATE	DATE	DATE	DATE	KOD A40

KLM-153

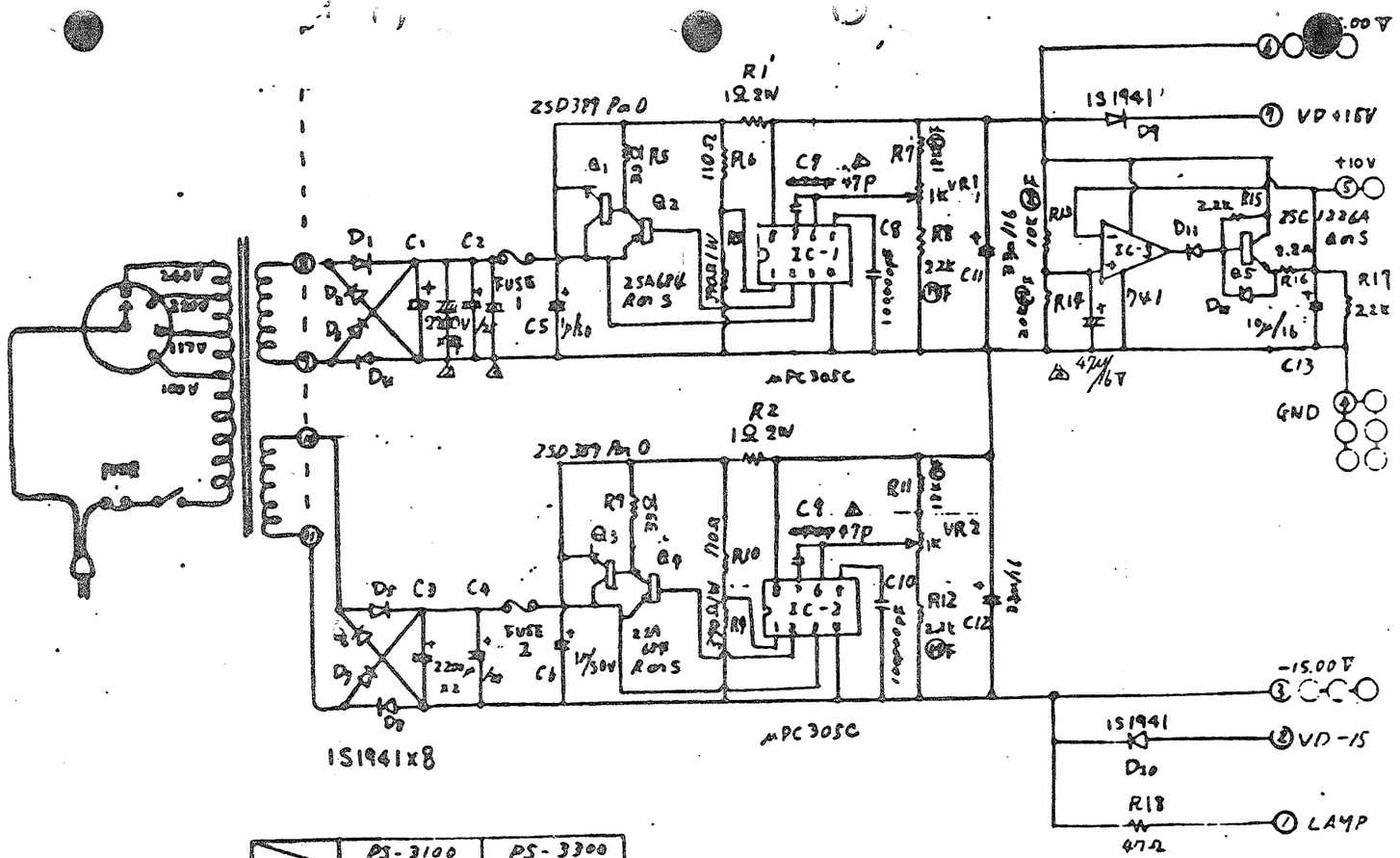

	PS-3100	PS-3300
AC FUSE	1 A	2A
FUSE 1	1A FAST	2A FAST
FUSE 2	1A FAST	2A FAST

MODEL PS-3300 POWER SUPPLY	REVISION △1	REVISION △2	REVISION	DWG NO
DATE 77-5-11	DATE 52-10-11	DATE 53.12	DATE	KOD-A40077

KLM-658

X-803-P

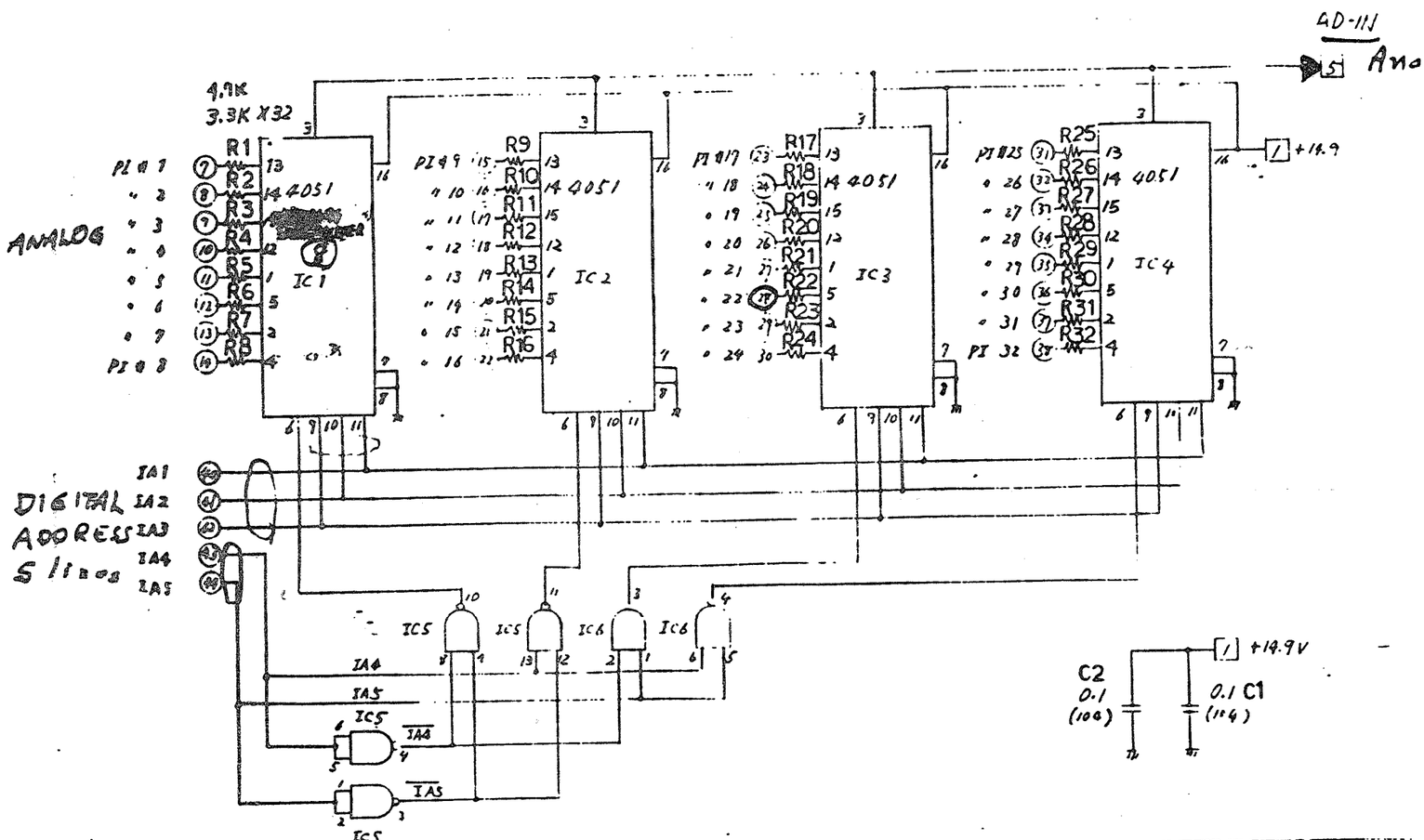

MODEL PROGRAMMER INPUT SCANNER PS-3200	REVISION	REVISION	REVISION	REVISION	DWG NO.
DATE 78-6-28 DRAWN BY 11 Yodomaku	DATE	DATE	DATE	DATE	KOD-A4008

KLM-151

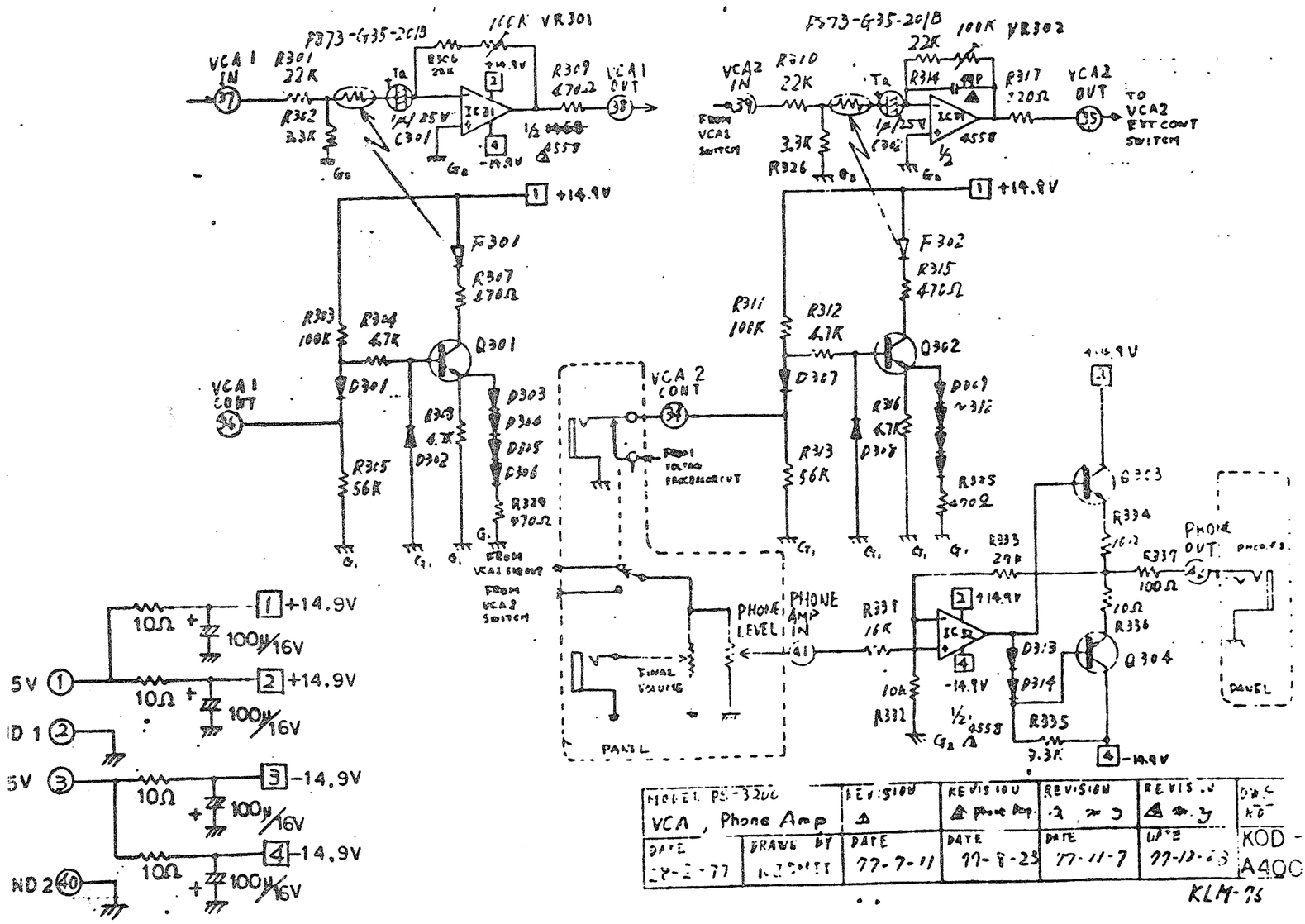

VCA 1 IN
VCA1 OUT
VCA1 CONT
VCA 2 CONT
VCA2 IN
VCA2 OUT
TO VCA2 EXT CONT SWITCH
FROM VCA1 SWITCH
FROM VCA2 SWITCH
FROM VOLTAGE PROCESSOR CUT
PHONE LEVEL
PHONE AMP IN
PHONE OUT
FINAL VOLUME
PANEL
+14.9V
-14.9V
10Ω
100μ/16V
MODEL PS-3200
VCA, Phone Amp
DATE
DRAWN BY
REVISION
DWG NO
KOD-A400
KLM-75

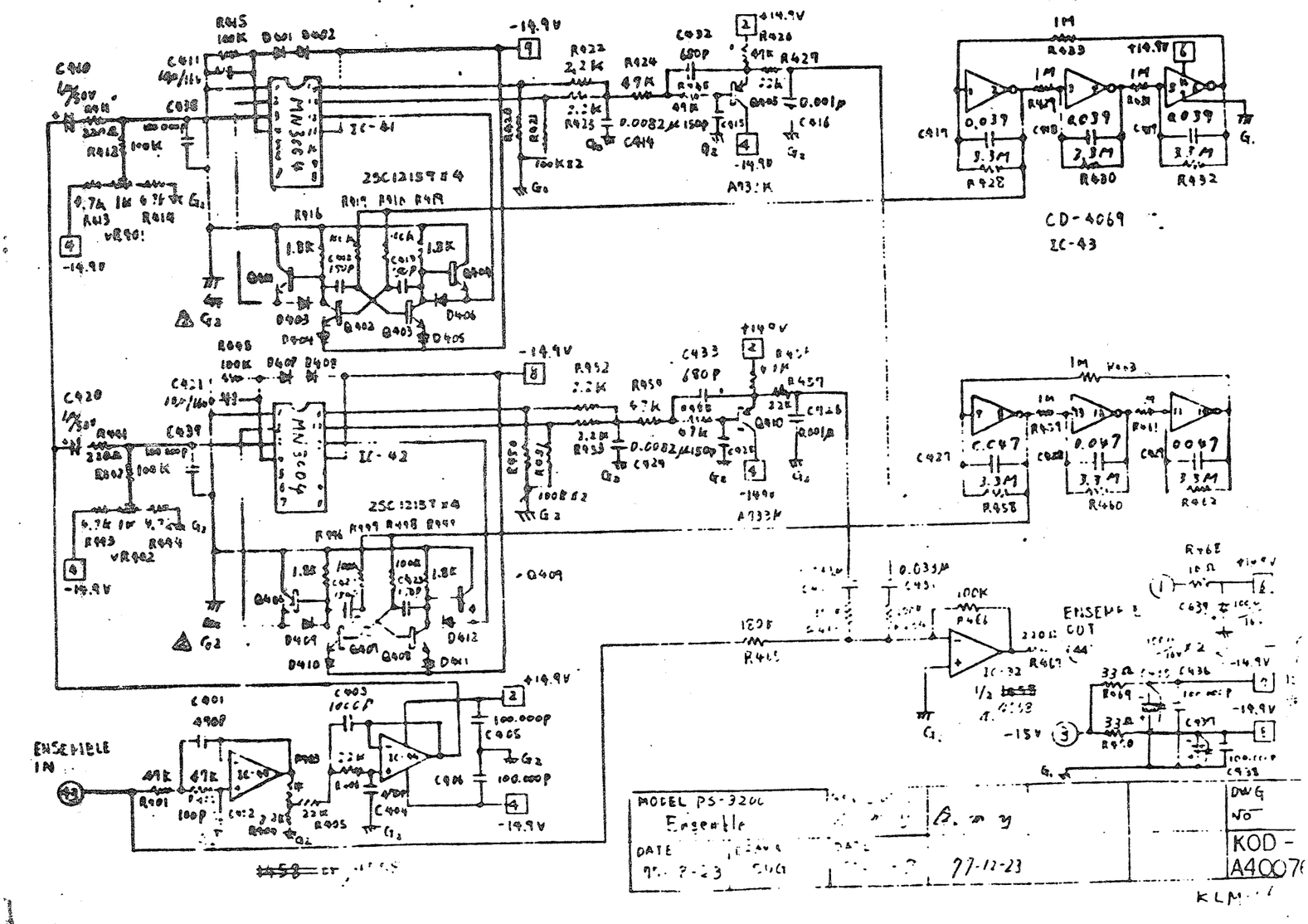

MN3004
IC-41
IC-42
2SC1215T #4
CD-4069
IC-43
ENSEMBLE IN
ENSEMBLE OUT
MODEL PS-3200
Ensemble
DATE
77-12-23
DWG NO
KOD-A40076
KLM-

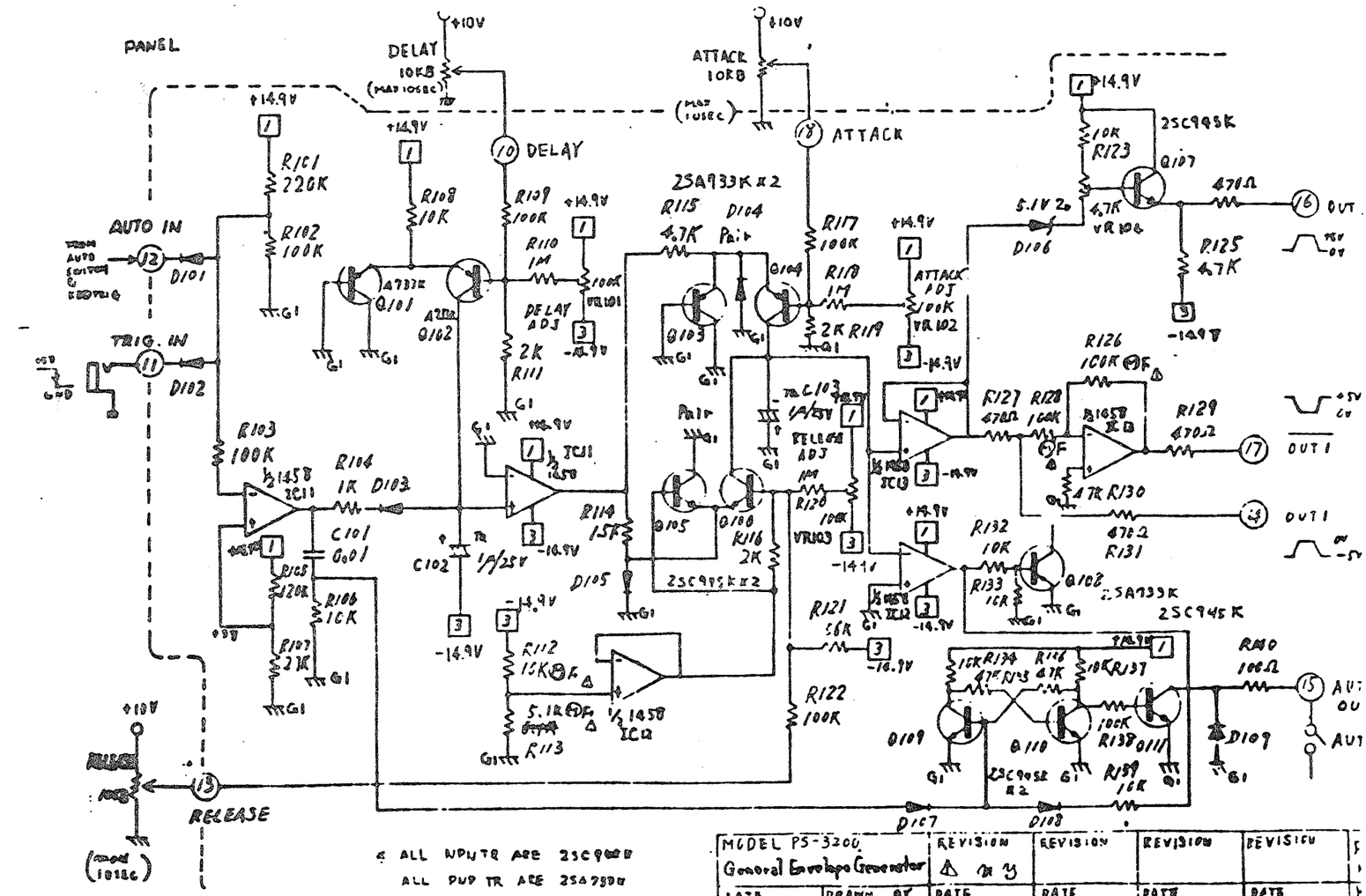

* ALL NPN TR ARE 2SC945K
ALL PNP TR ARE 2SA933K

MODEL PS-3200 General Envelope Generator		REVISION	REVISION	REVISION	REVISION
DATE 26-2-77	DRAWN BY K.ISHII	DATE 77-11-10	DATE	DATE	DATE

KLM

23

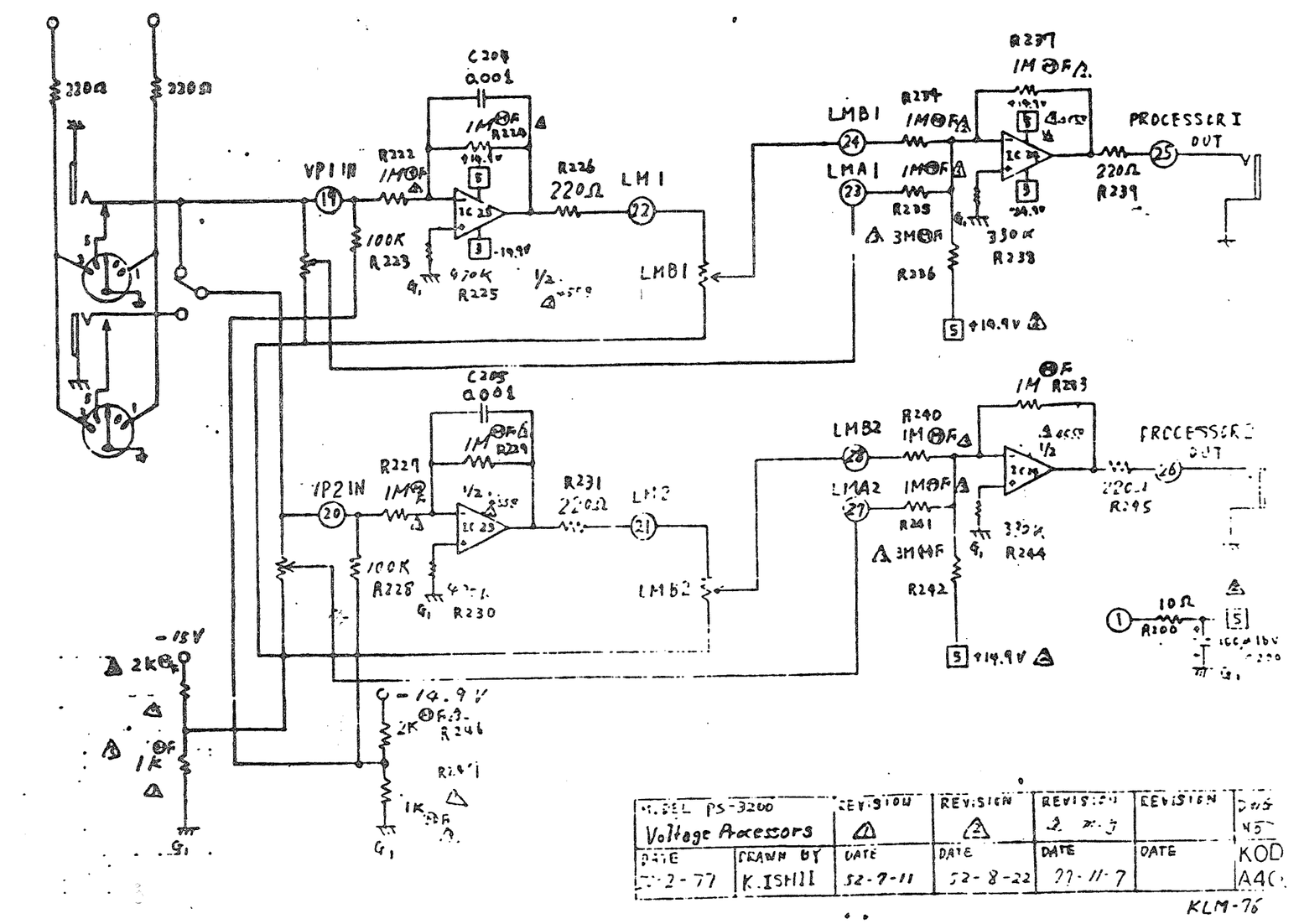

MODEL PS-3200 Voltage Processors		REVISION	REVISION	REVISION	REVISION	DWG NO
DATE 2-77	DRAWN BY K.ISHII	DATE 52-7-11	DATE 52-8-22	DATE 77-11-7	DATE	KOD A40

KLM-76

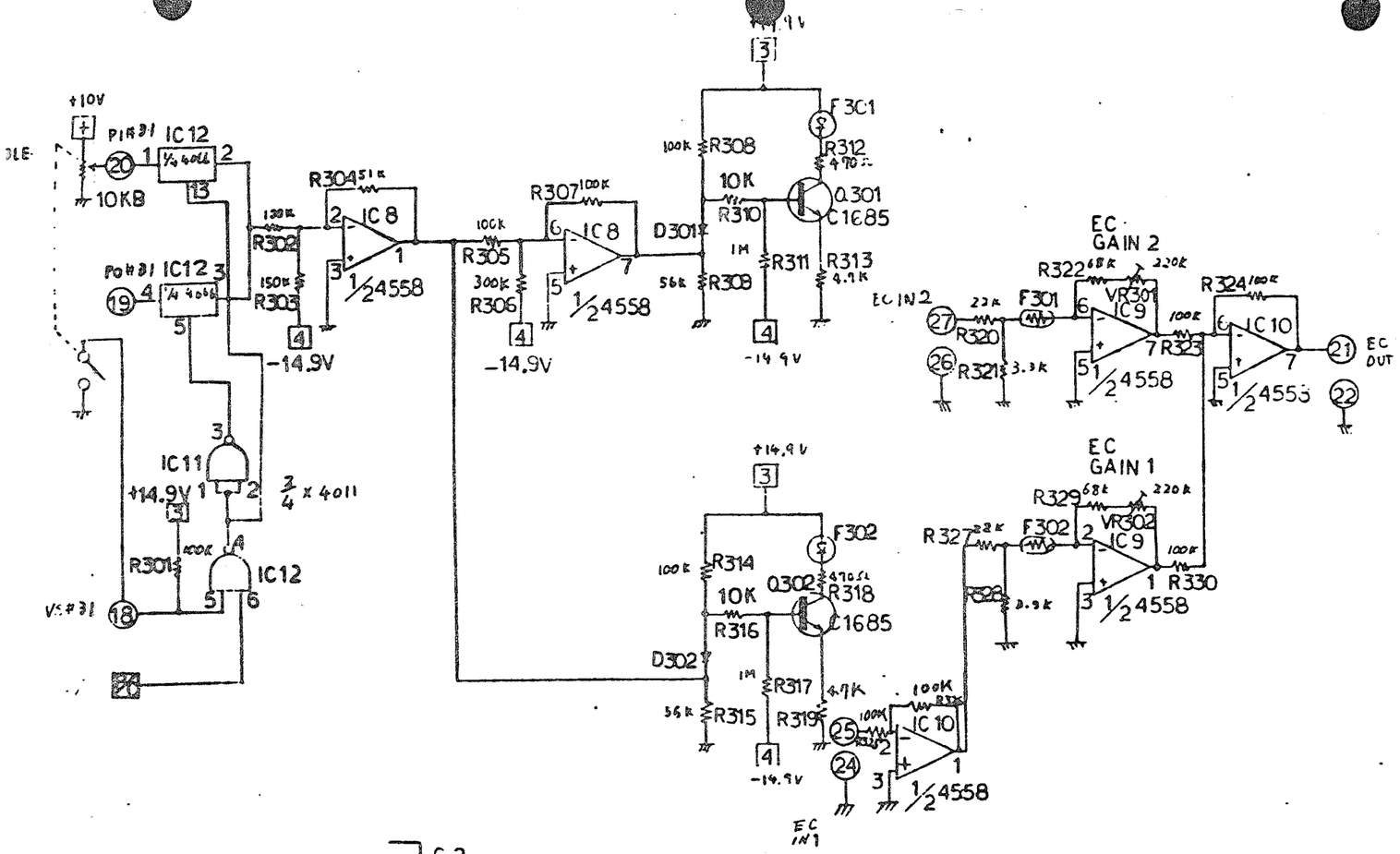

MODEL PS-3200 ENSEMBLE CONTROL		REVISION	REVISION	REVISION	REVISION	DWG NO
DATE	DRAWN BY	DATE	DATE	DATE	DATE	KOD-A40071
83-9-24	M. Sugano					

KLM-150

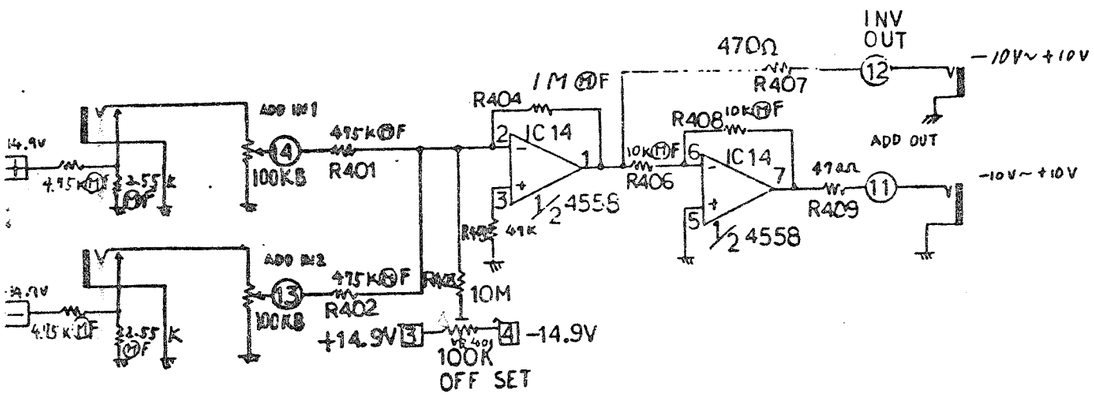

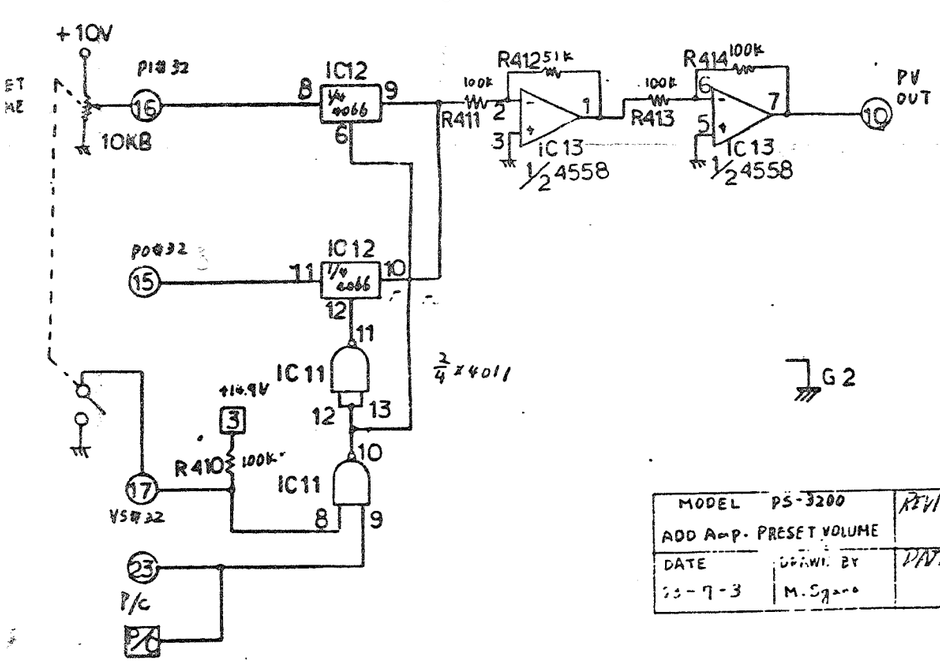

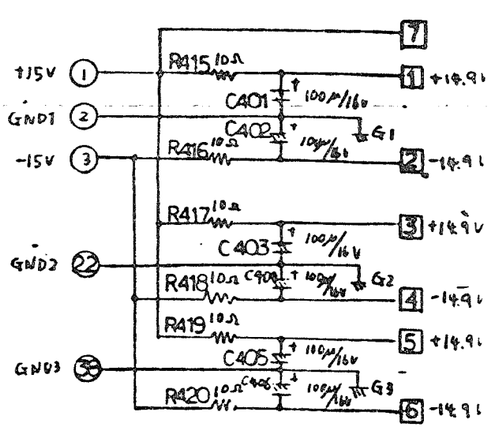

MODEL PS-3200 ADD A-P. PRESET VOLUME		REVISION	REVISION	REVISION	REVISION	DWG NO.
DATE	DRAWN BY	DATE	DATE	DATE	DATE	KOD-A40072
83-9-3	M. Sugano					

KLM-150

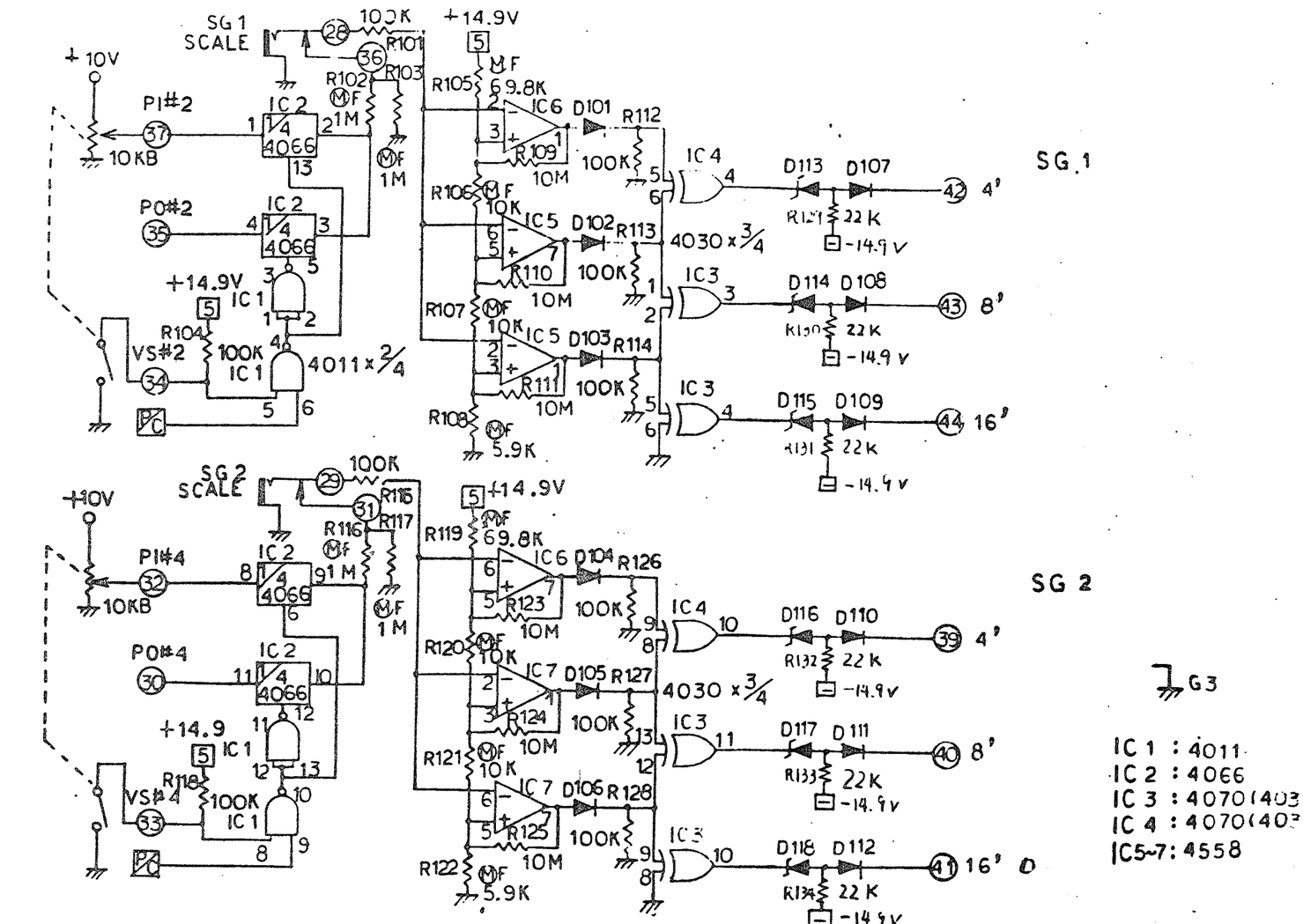

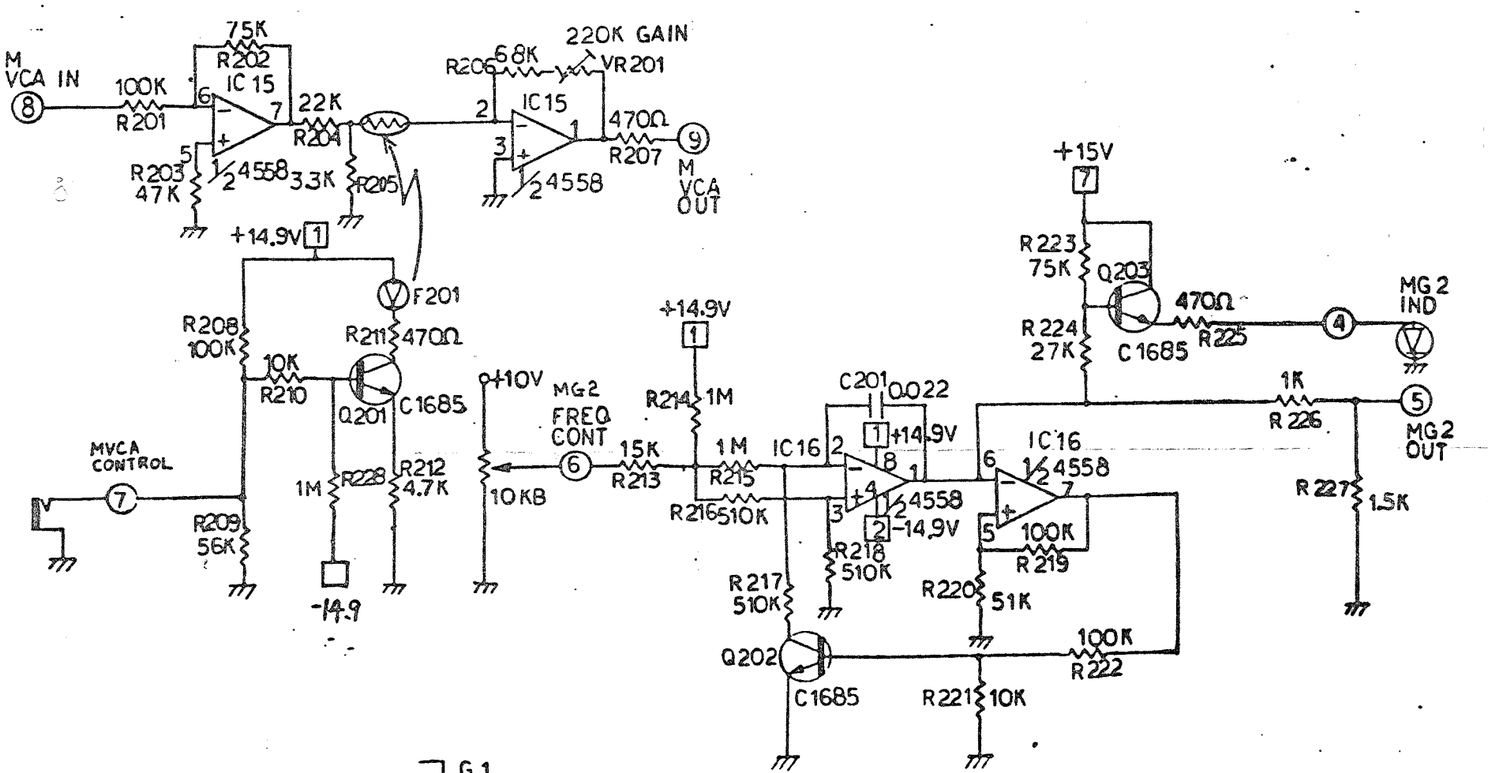

MODEL PS-3200 MCD-VCA, MG 2		REVISION	REVISION	REVISION	REVISION	DWG NO
DATE 10-7-78	DRAWN BY K.MIYAWAKI	DATE	DATE	DATE	DATE	KOD A40

KLM-15

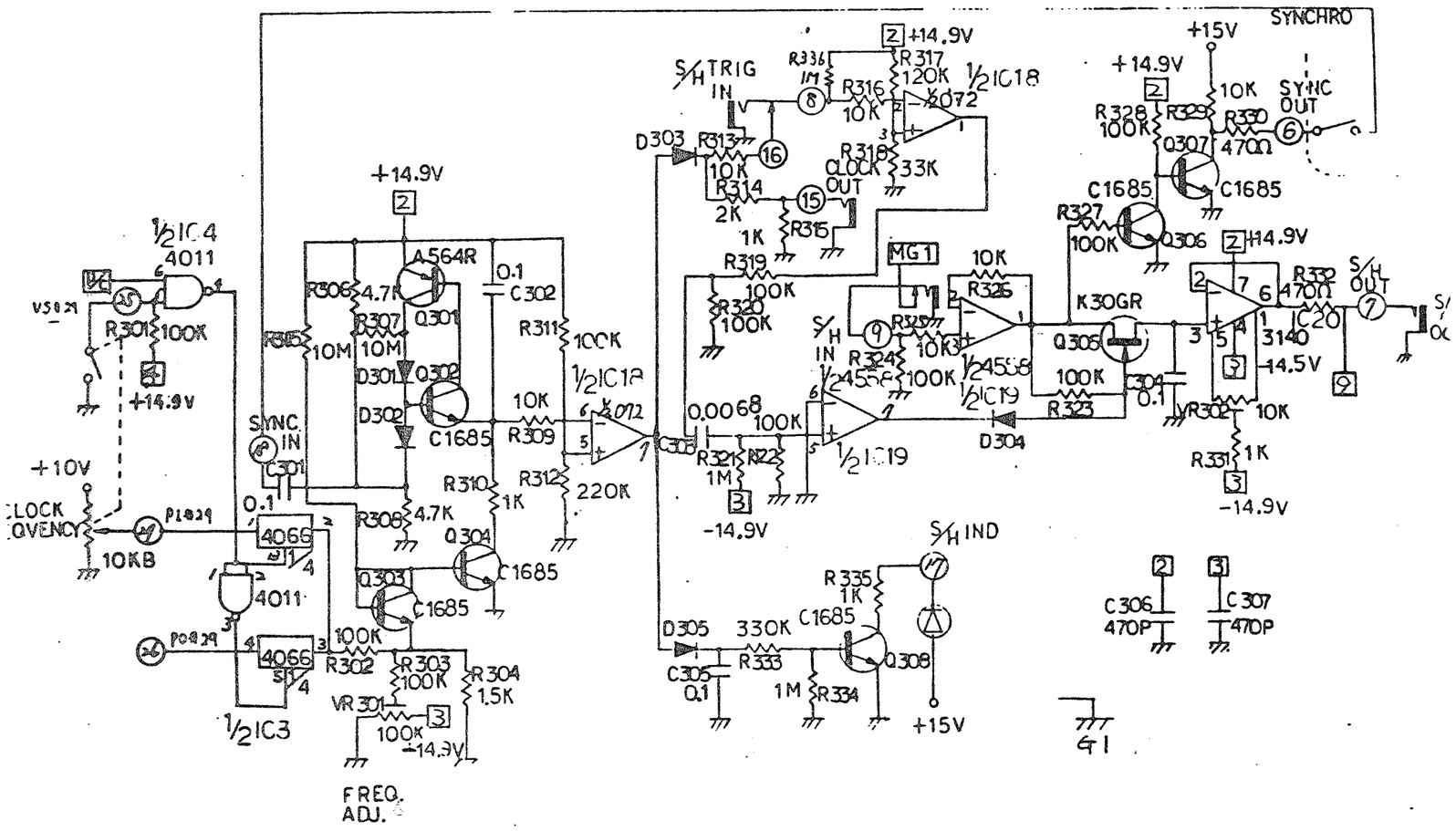

MODEL PS-3300 SAMPLE & HOLD	REVISION	REVISION	REVISION	REVISION	DWG NO.
DATE 10-7-78 DRAWN BY	DATE	DATE	DATE	DATE	KOD-A40067

KLM-146

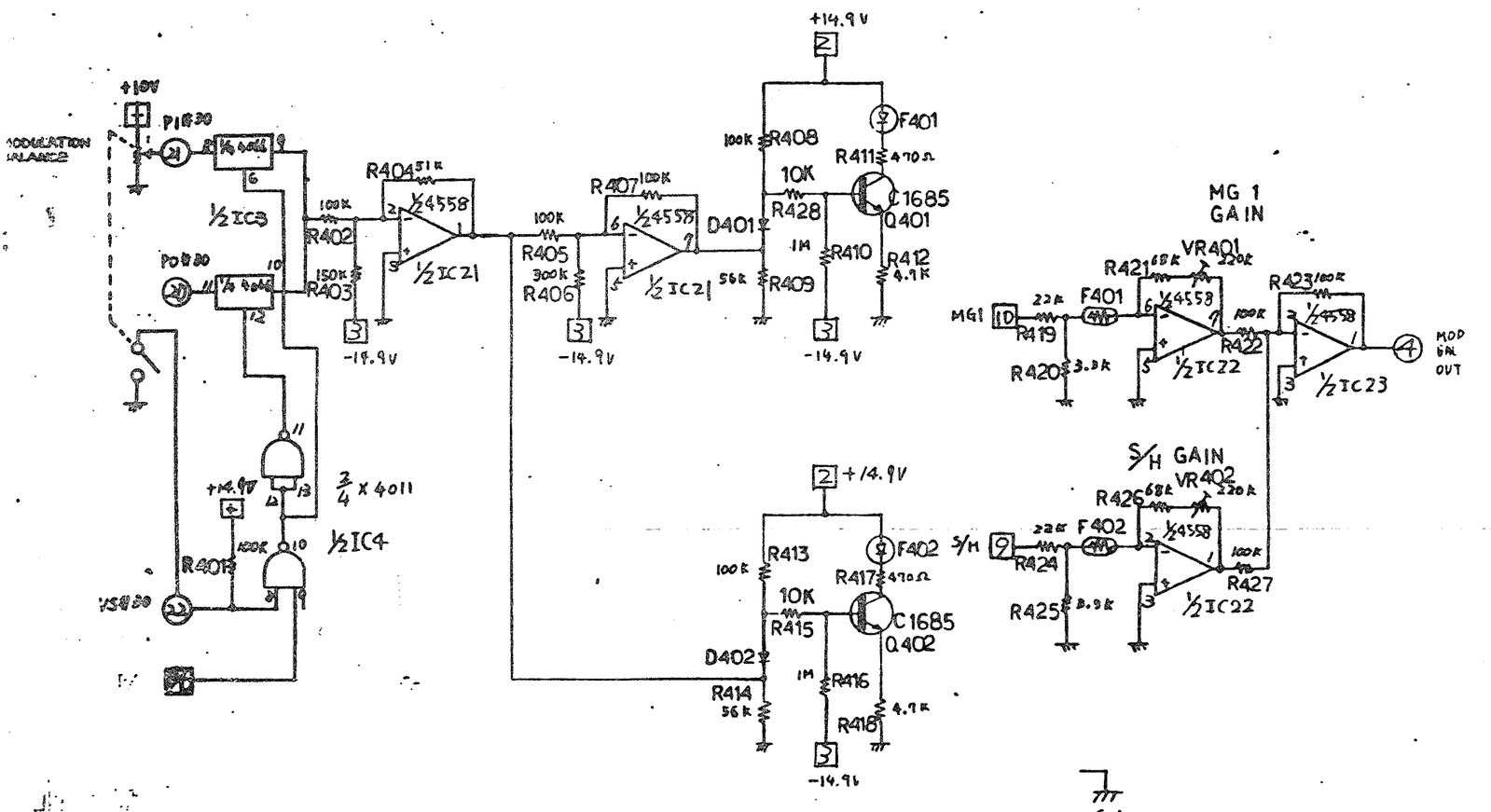

MODEL PS-3300 MODULATION BALANCE	REVISION	REVISION	REVISION	REVISION	DWG No.
DATE 18-6-24 DRAWN BY M. Sugano	DATE	DATE	DATE	DATE	KOD-A40066

KLM-14

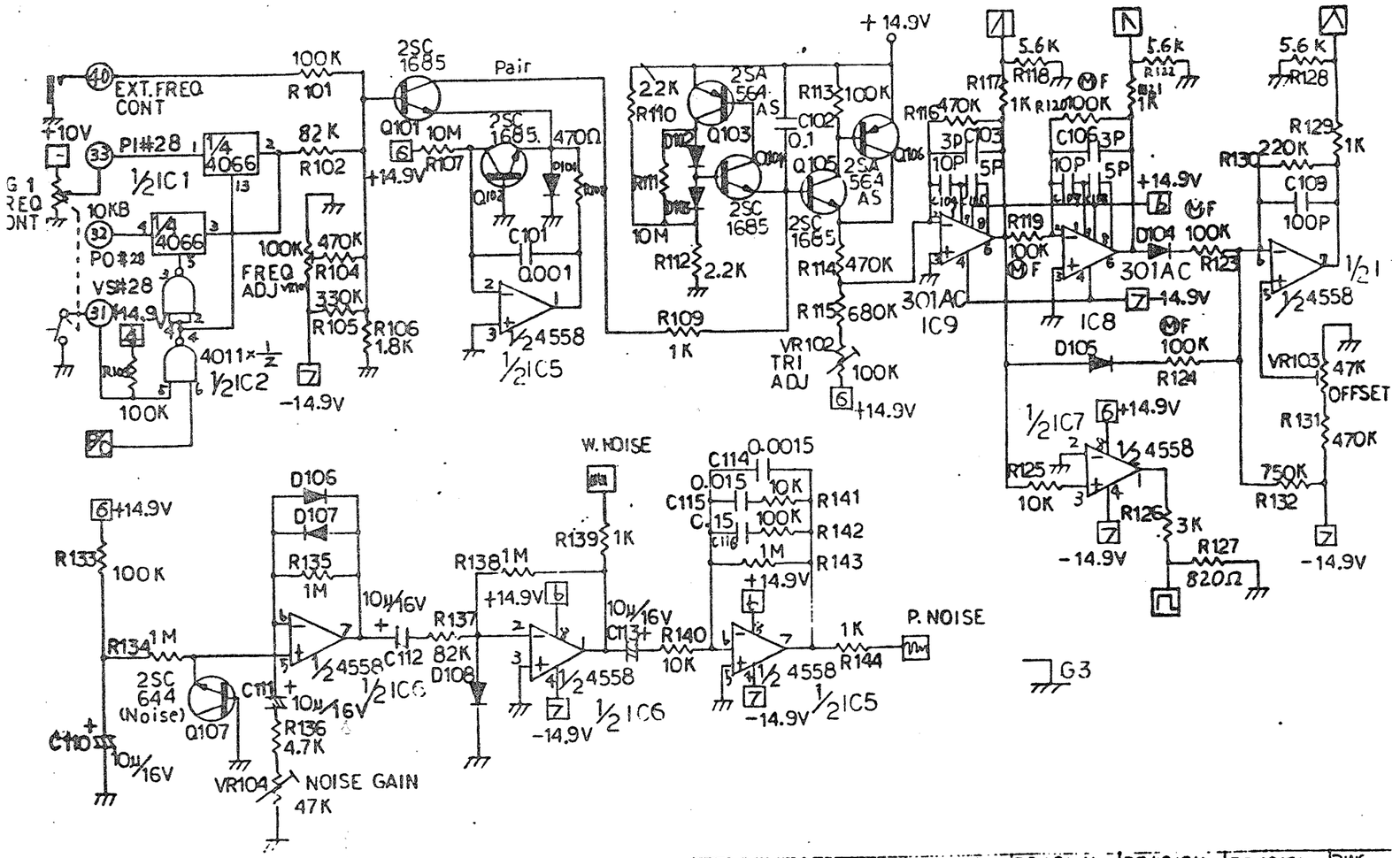

MODEL PS-3200 MG-1, NOISE GENERATOR	REVISION	REVISION	REVISION	REVISION	DWG NO
DATE 10-7-78 DRAWN BY	DATE	DATE	DATE	DATE	KOD-A400

X-503

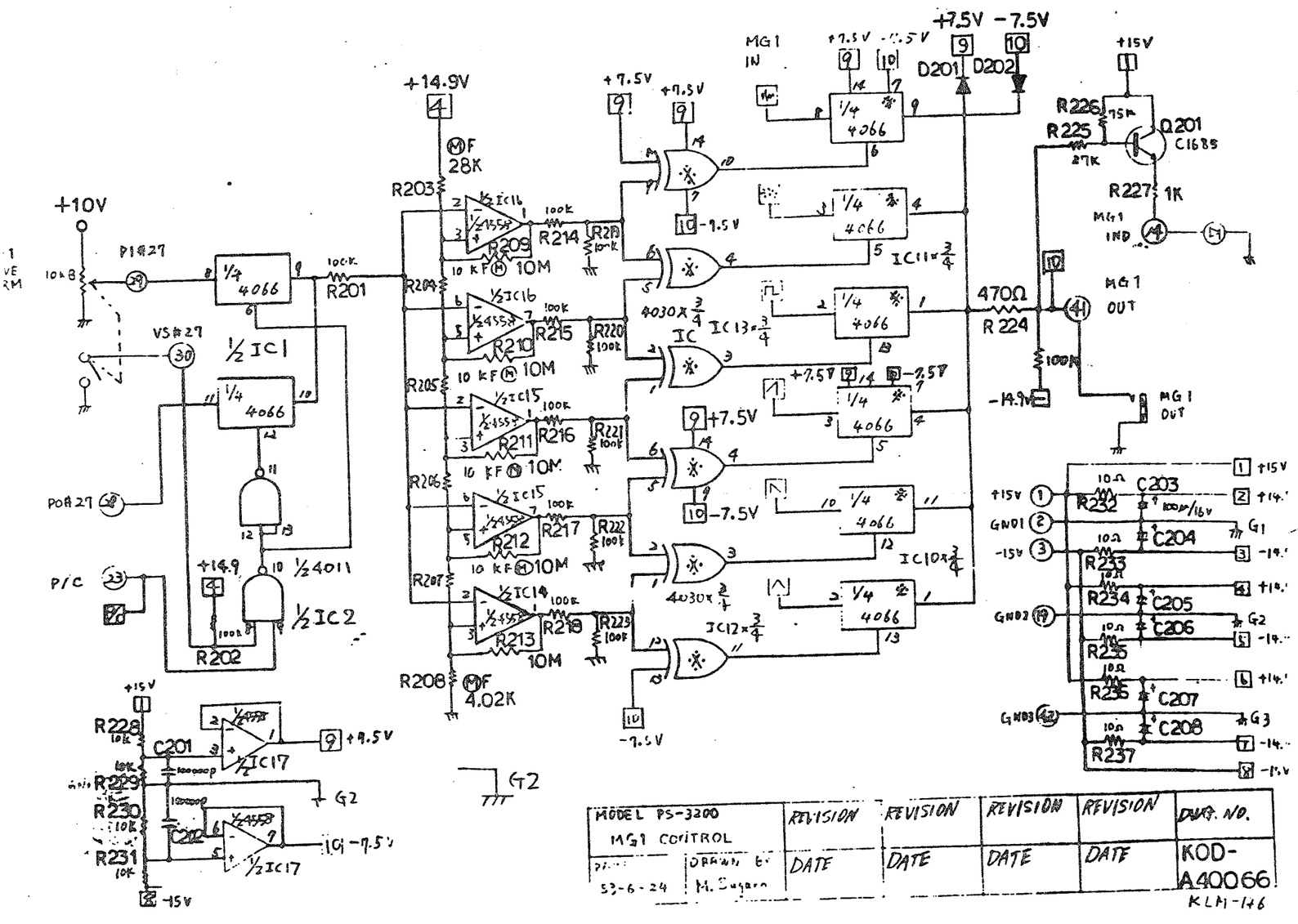

MODEL PS-3200 MG1 CONTROL	REVISION	REVISION	REVISION	REVISION	DWG. NO.
DATE 53-6-24 DRAWN BY M. Sugano	DATE	DATE	DATE	DATE	KOD-A40066

KLM-146

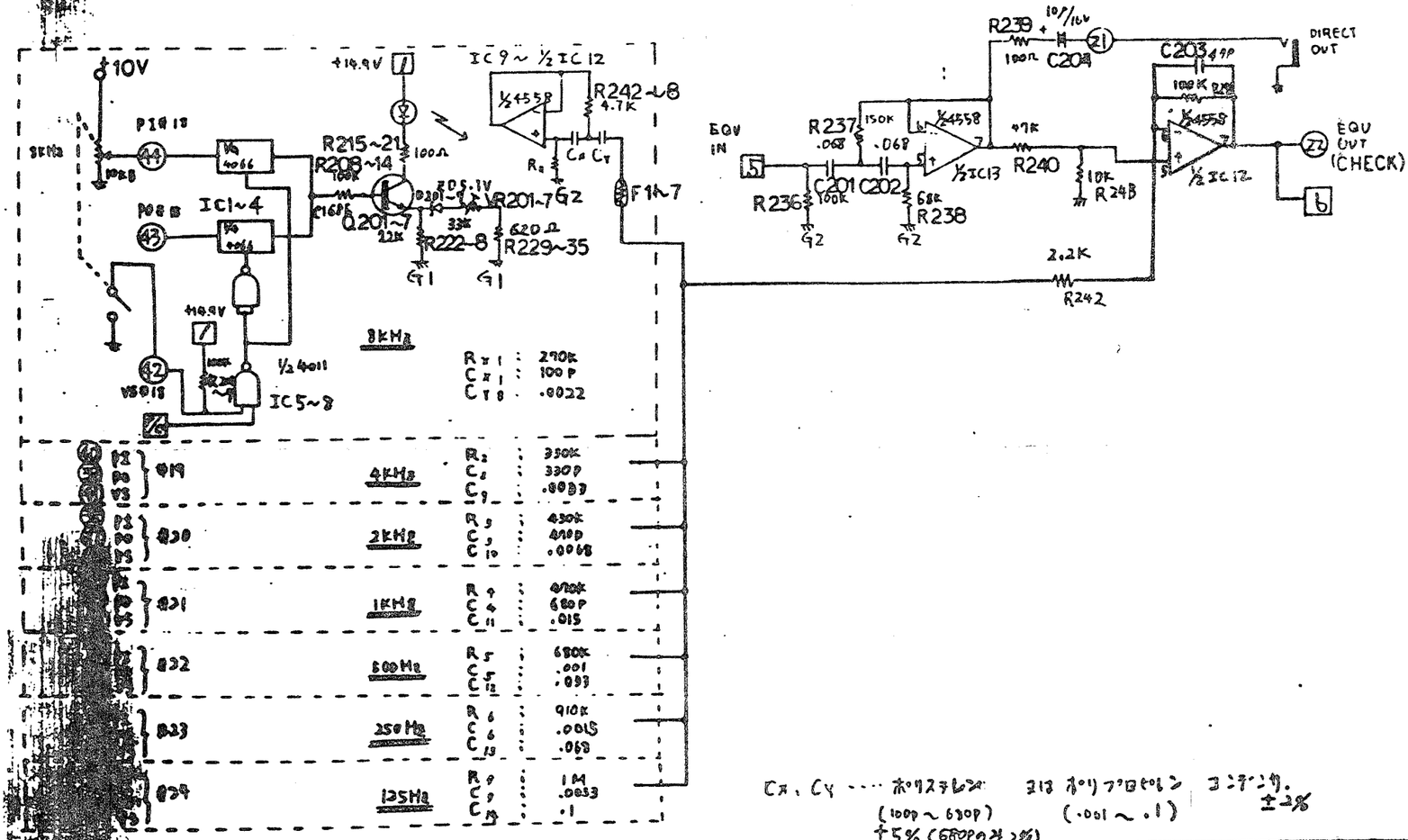

Cx, Cy ···· ポリスチレン (100p ~ 680p) ±5% (680pのみ2%)　又は ポリプロピレン (.001 ~ .1)　コンデンサ ±2%

MODEL PS-3200 EQUALIZER		REVISION	REVISION	REVISION	REVISION	DWG. No
DATE 53-8-1	DRAWN BY M. SUGANO	DATE	DATE	DATE	DATE	KOD-A40063

KLM-149

x-803

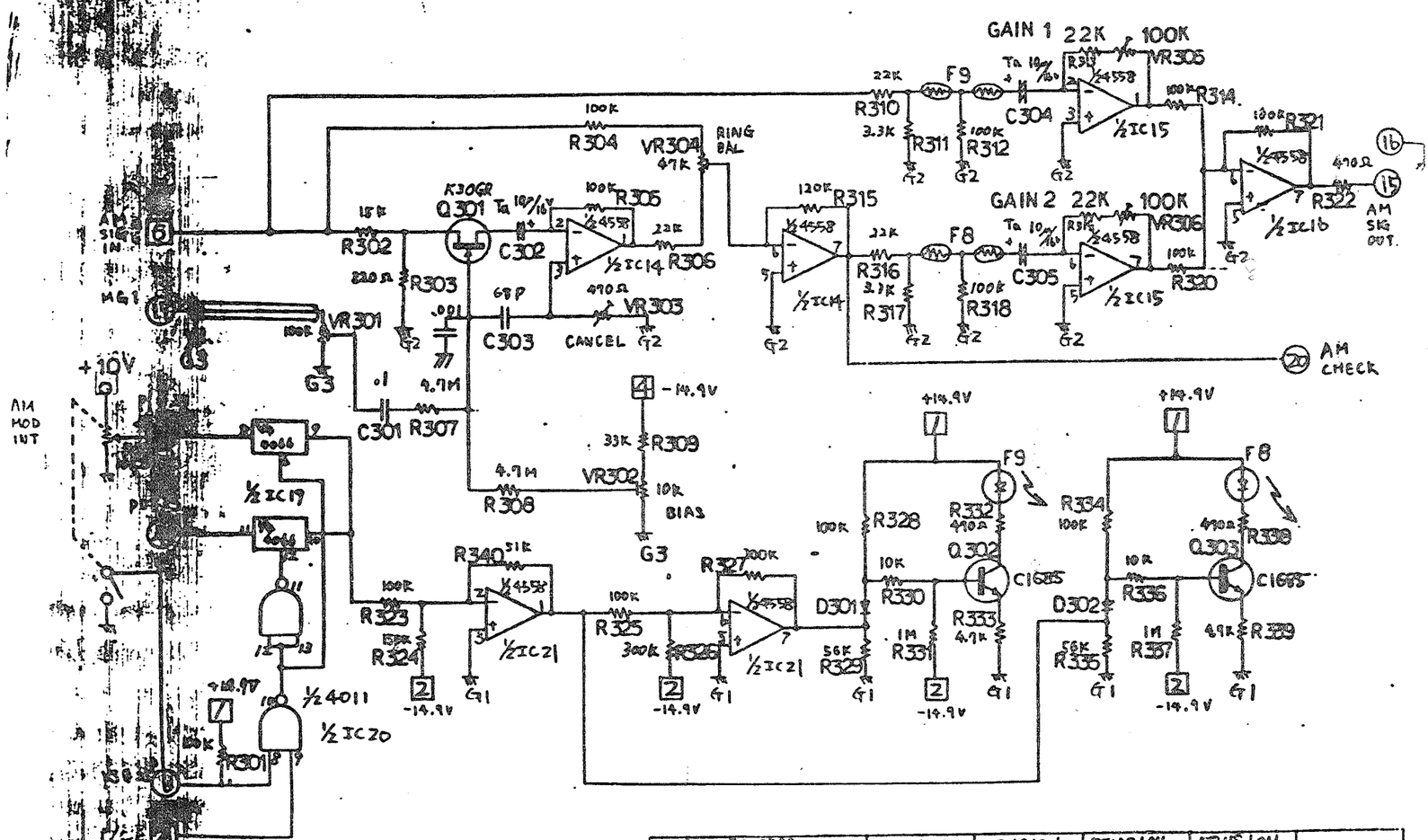

MODEL PS-3200 AMPLITUDE MODULATOR		REVISION	REVISION	REVISION	REVISION	DWG. No.
DATE 53. 6. 30	DRAWN BY M. Sugano	DATE	DATE	DATE	DATE	KOD-A40064

KLM-149

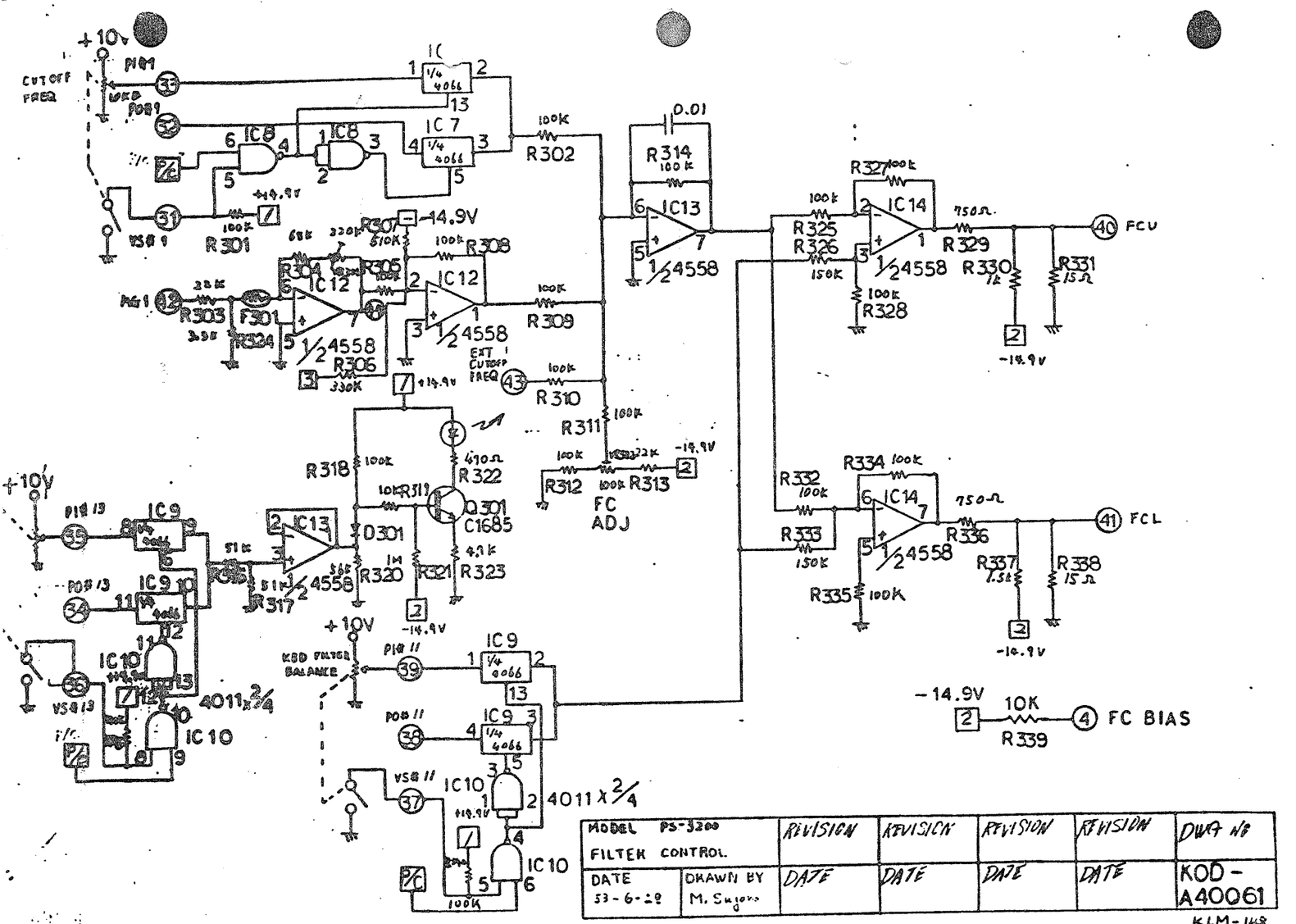

MODEL PS-3200 FILTER CONTROL		REVISION	REVISION	REVISION	REVISION	DWG NO
DATE 53-6-28	DRAWN BY M. Sugano	DATE	DATE	DATE	DATE	KOD-A40061

KLM-148

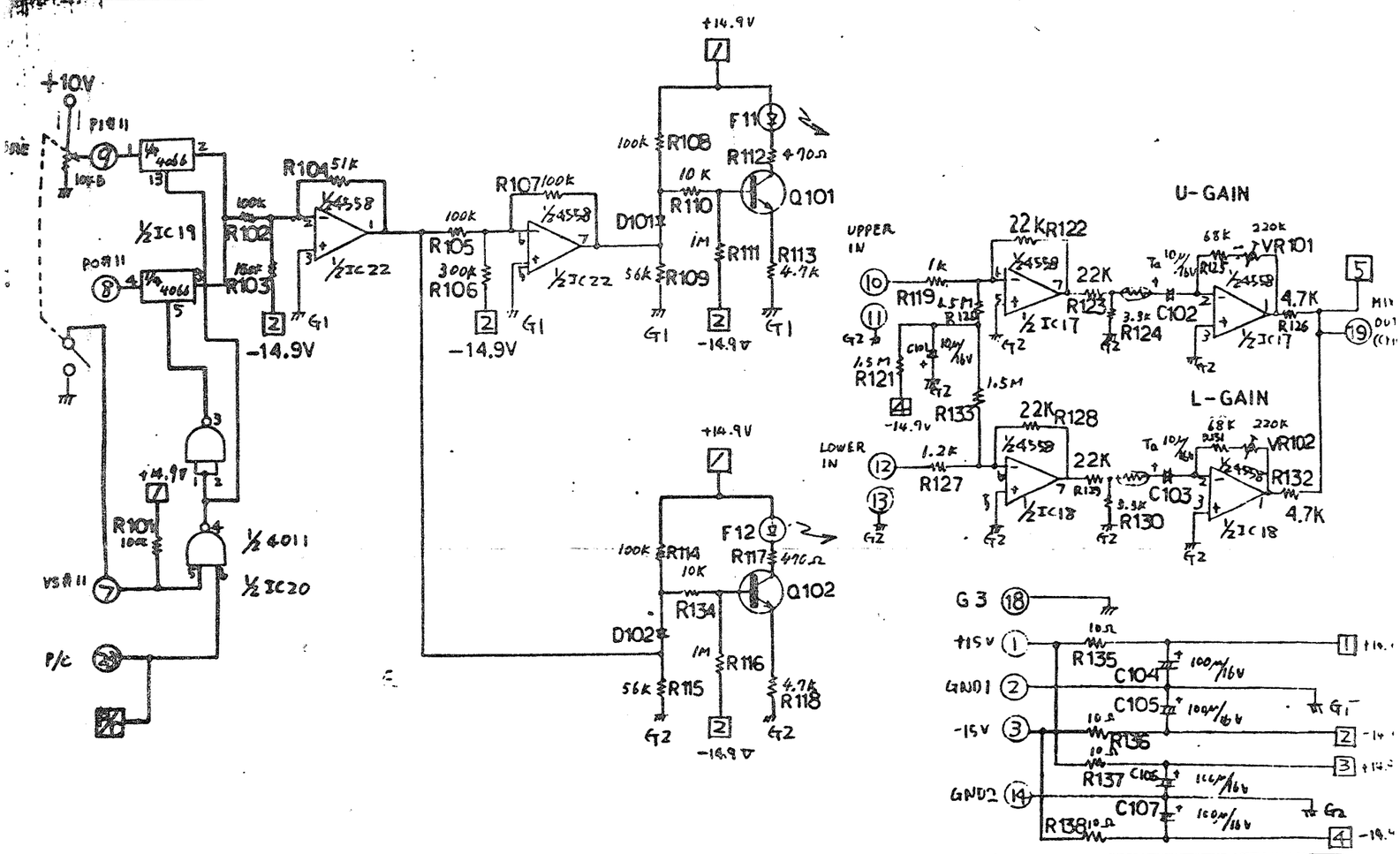

MODEL PS-3200 BALANCE MIXER		REVISION	REVISION	REVISION	REVISION	DWG NO.
DATE 77-6-24	WRITTEN BY M. Sugano	DATE	DATE	DATE	DATE	KOD-A40062

KLM-149

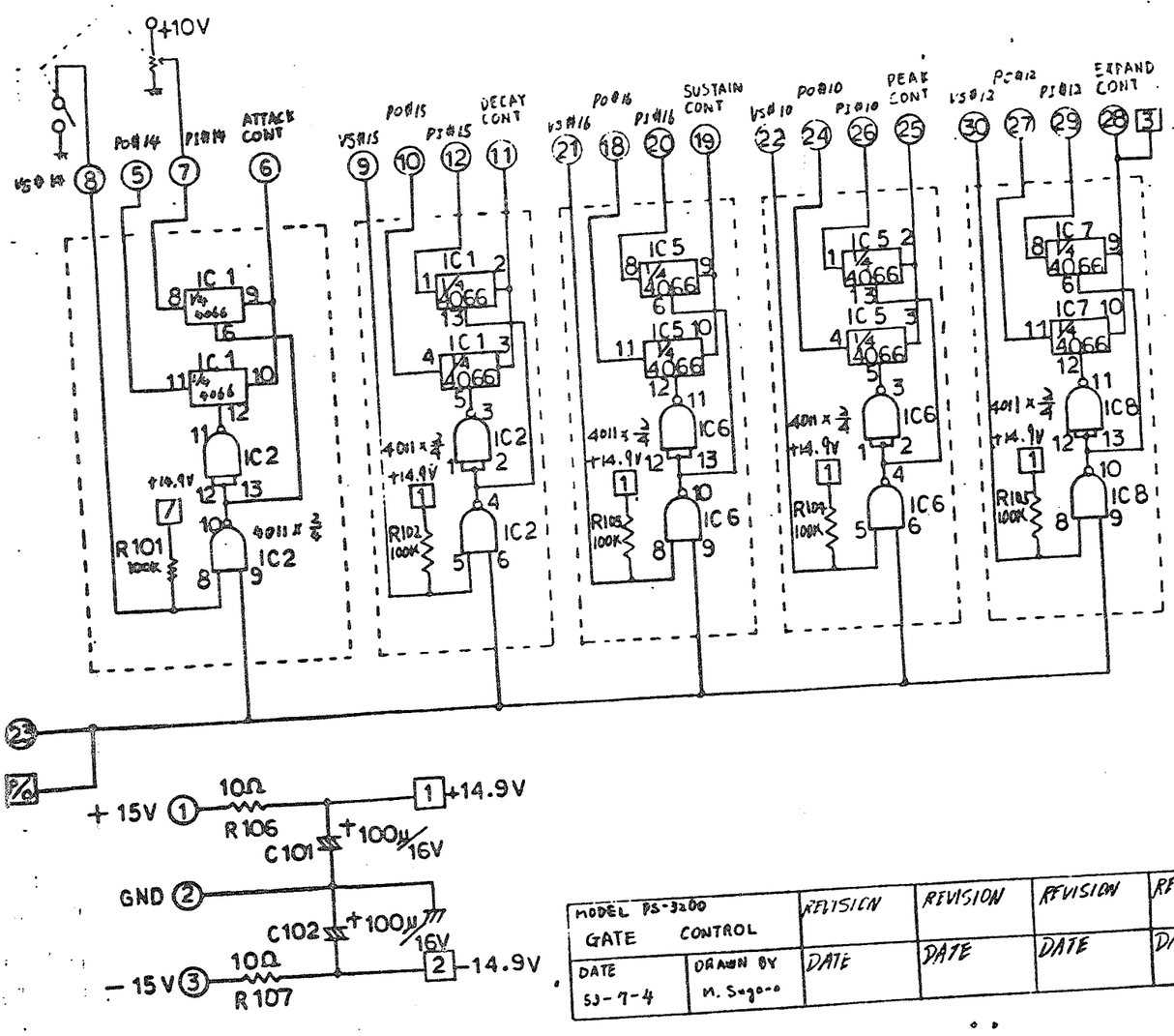

MODEL PS-3200 GATE CONTROL		REVISION	REVISION	REVISION	REVISION	DWG NO.
DATE 53-7-4	DRAWN BY M. Sugao	DATE	DATE	DATE	DATE	KOD-A40059
						KLM-148

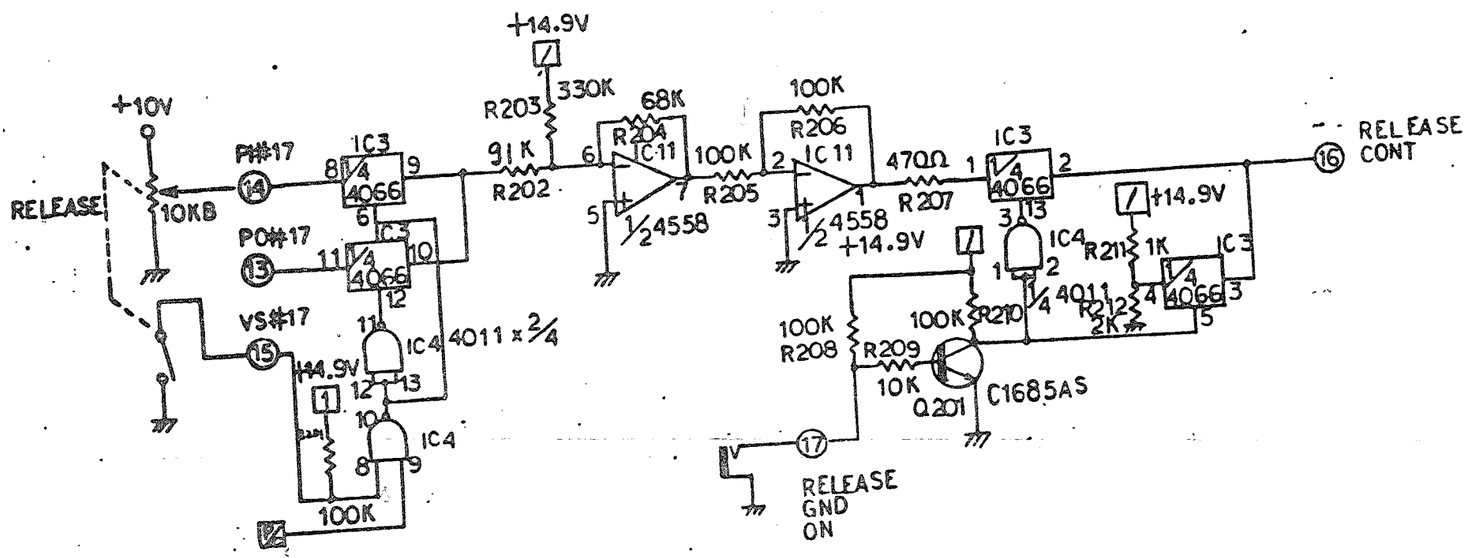

MODEL PS-3200 RELEASE CONTROL		REVISION	REVISION	REVISION	REVISION	DWG NO.
DATE 24-7-78	DRAWN BY K Miyawaki	DATE	DATE	DATE	DATE	KOD-A40060
						KLM-148

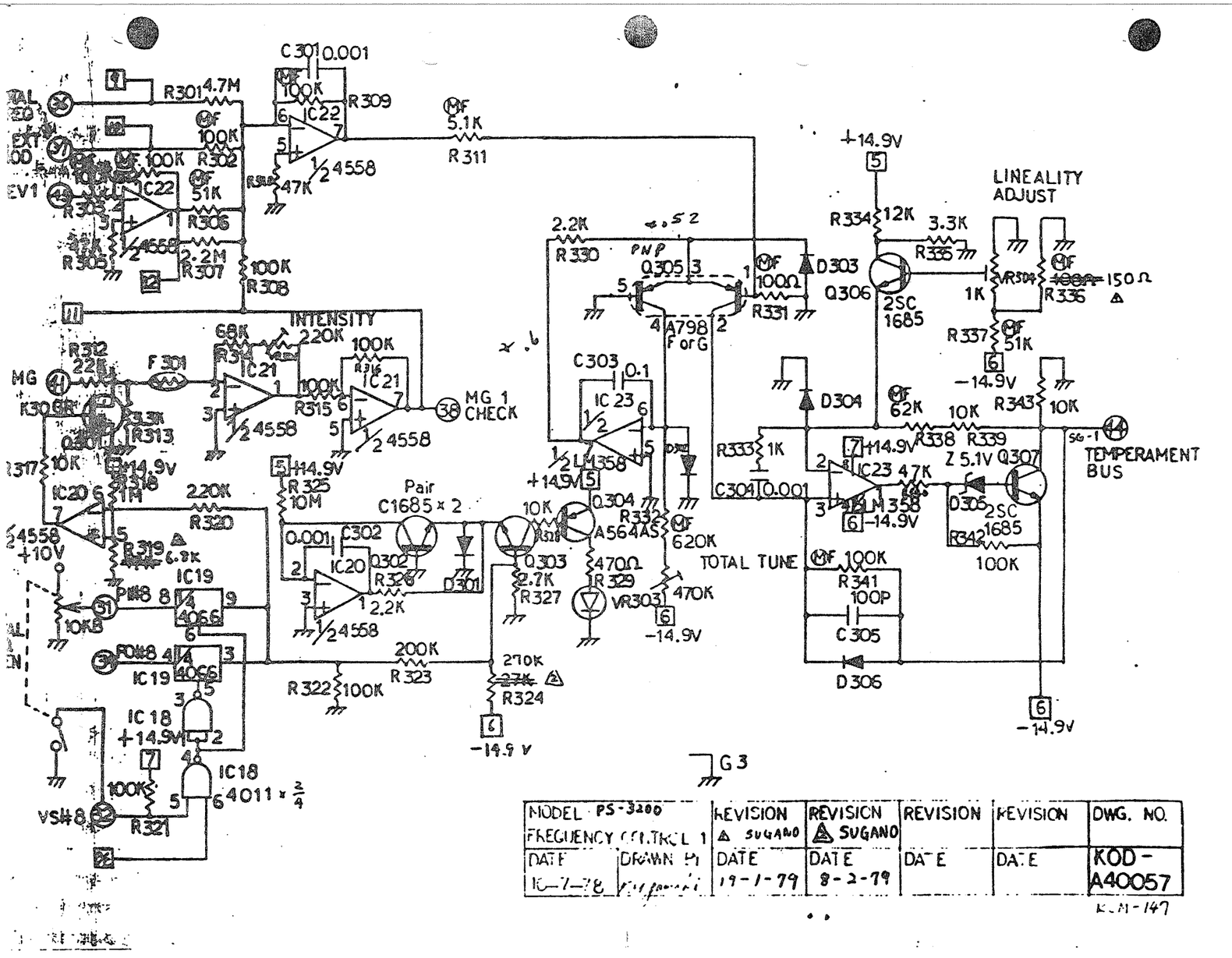

MODEL PS-3200	REVISION	REVISION	REVISION	REVISION	DWG. NO.
FREQUENCY CONTROL 1	Δ SUGANO	Δ SUGANO			
DATE / DRAWN BY	DATE	DATE	DATE	DATE	KOD-A40057
10-7-78	19-1-79	8-2-79			

K.M-147

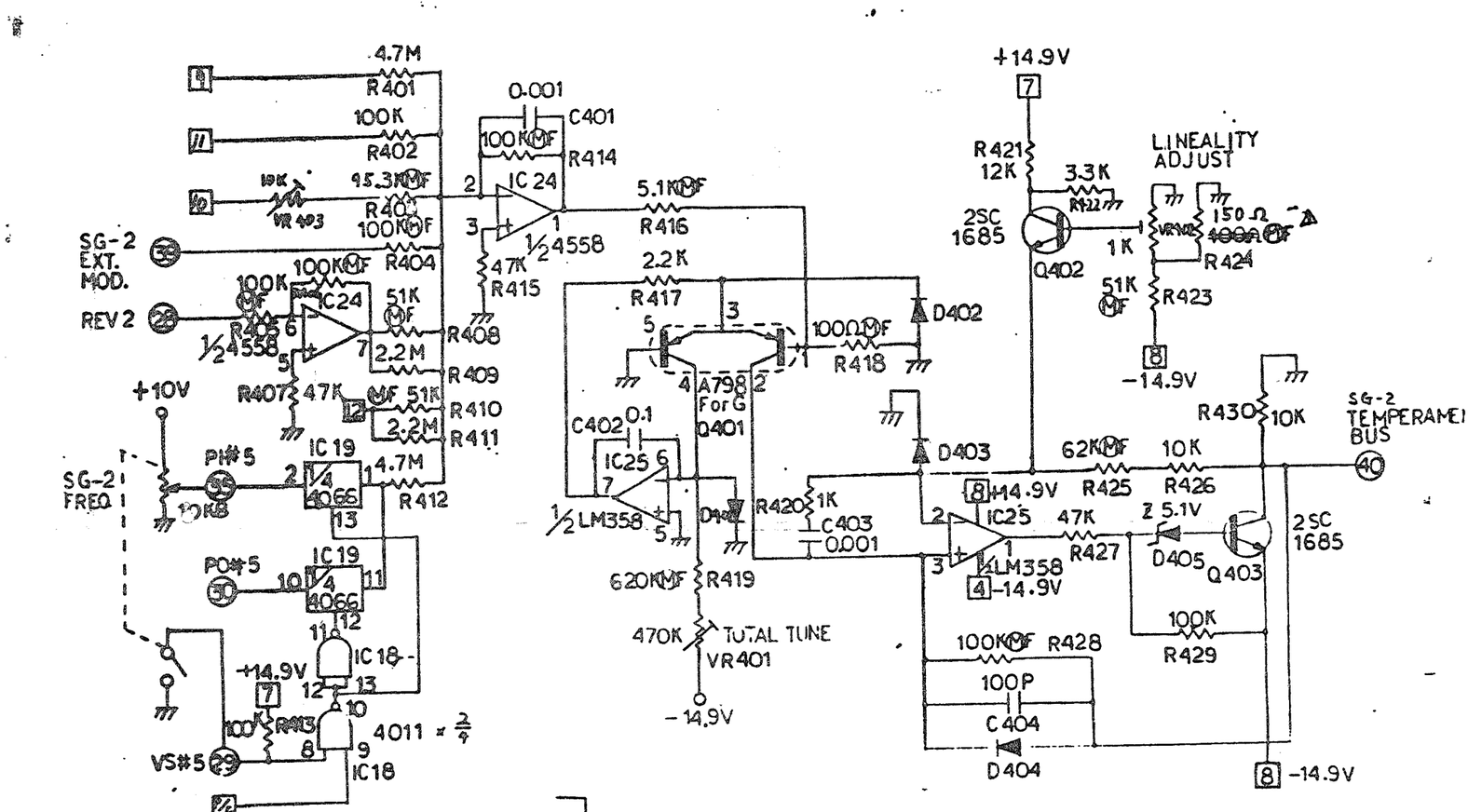

MODEL PS-3200	REVISION	REVISION	REVISION	REVISION	DWG. NO.
FREQUENCY CONTROL 2	Δ SUGANO				
DATE / DRAWN BY	DATE	DATE	DATE	DATE	KOD-A40058
10-7-78	19-1-79				

K.M-148

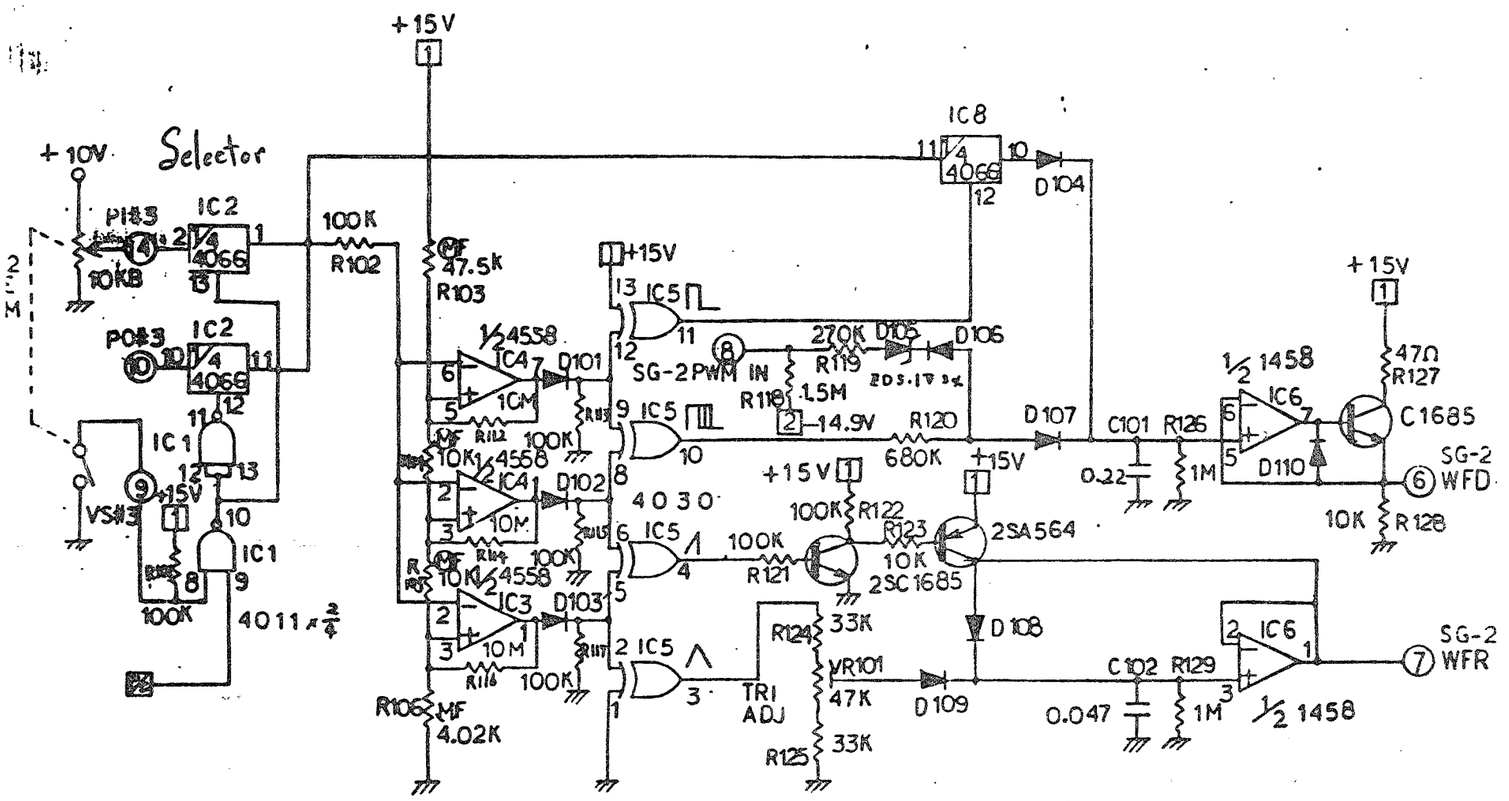

MODEL PS-3200 SG-2 WAVE FORM		REVISION	REVISION	REVISION	REVISION	DWG. NO.
DATE '78-7-7	DRAWN BY K.M.Yamada	DATE	DATE	DATE	DATE	KOD-A40055

KLM-147

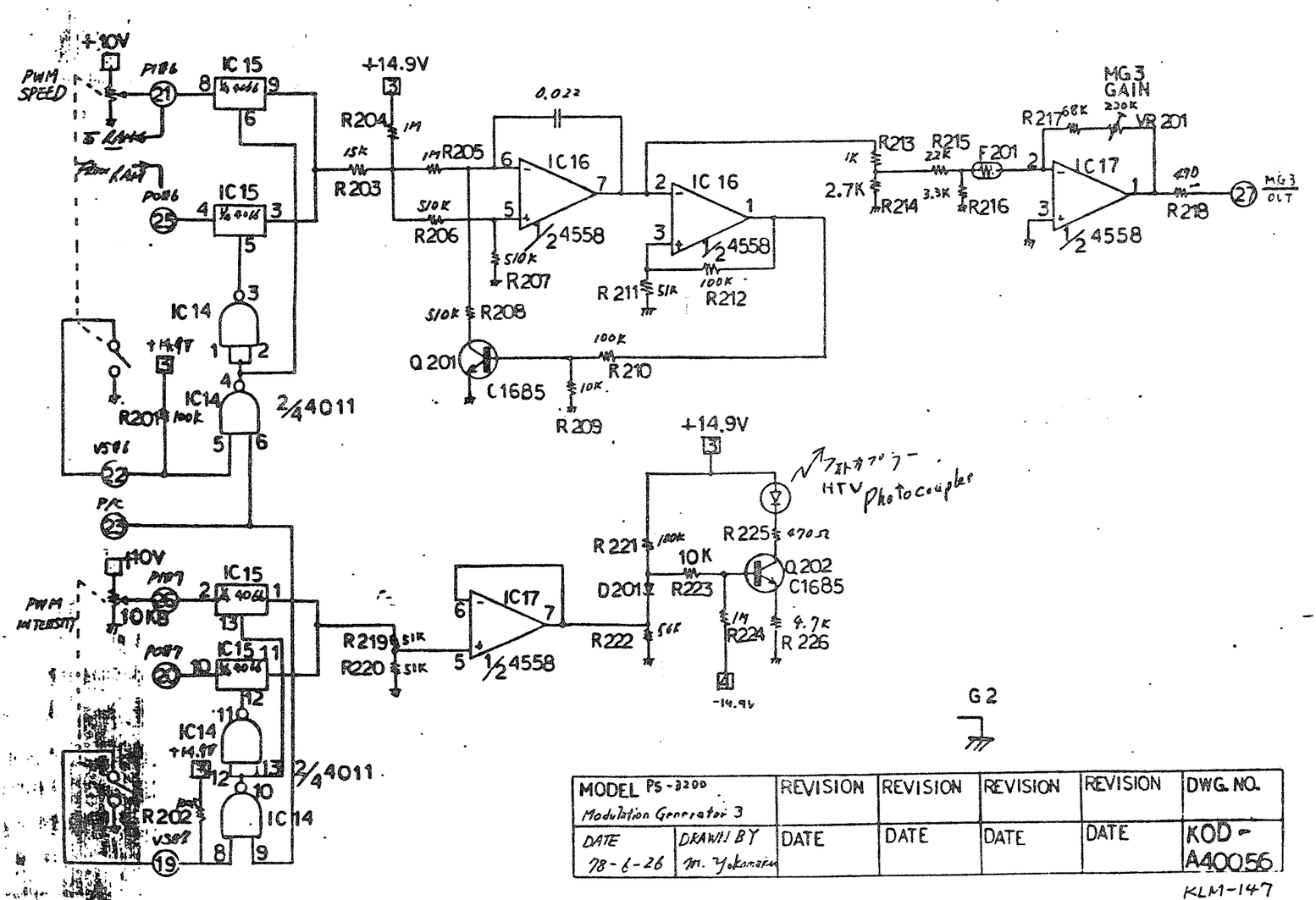

MODEL PS-3200 Modulation Generator 3		REVISION	REVISION	REVISION	REVISION	DWG. NO.
DATE 78-6-26	DRAWN BY M. Yokomaru	DATE	DATE	DATE	DATE	KOD-A40056

KLM-147

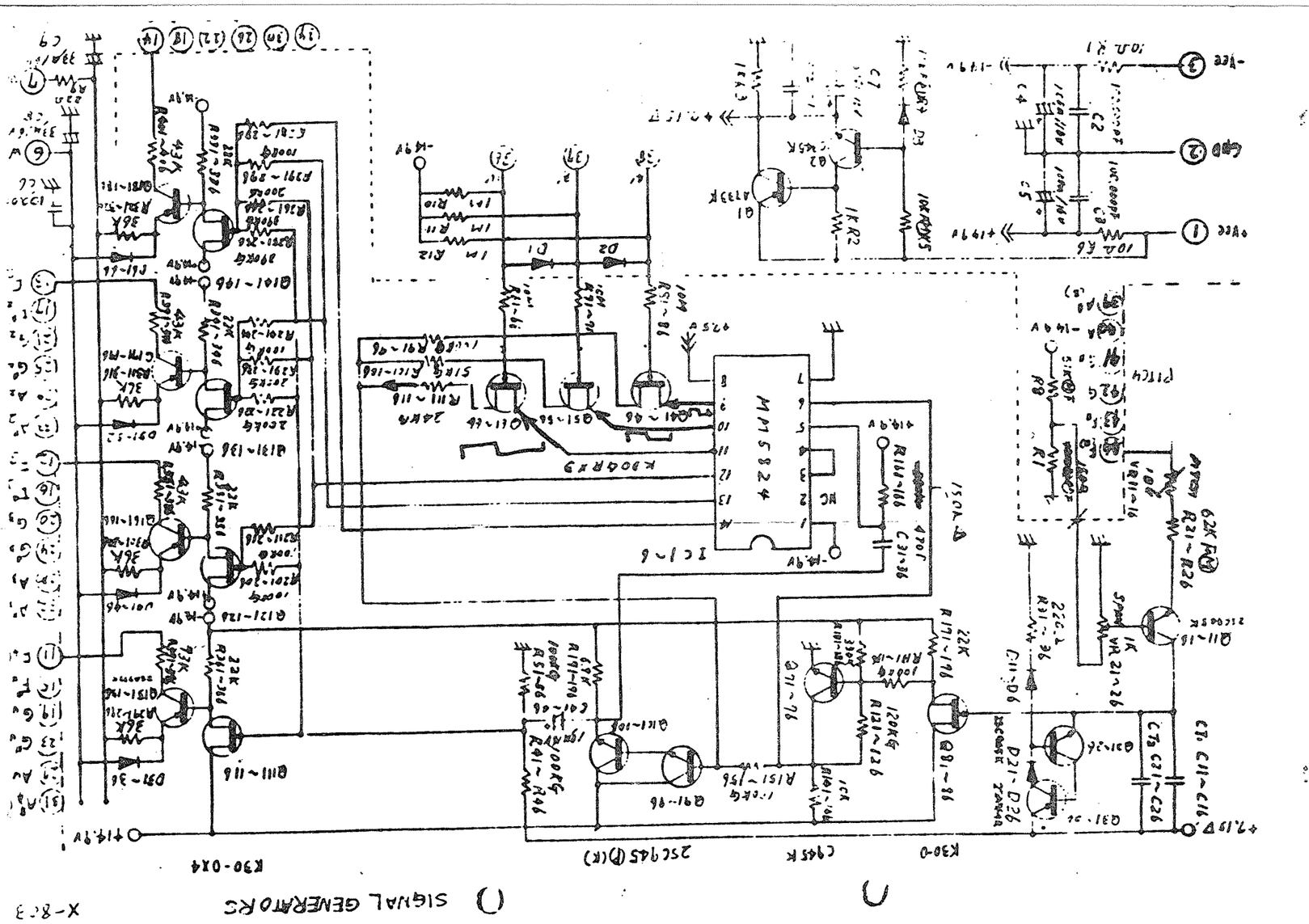

SIGNAL GENERATOR CT CHART

1	F	C11	1500 PF	C21	470 PF
	F#	C12	1200	C22	270
	G	C13	1200	C23	180
	G#	C14	1200	C24	100
	A	C15	1000	C25	220
	A#	C16	1000	C26	150
2	B	C11	1000	C21	100
	C	C12	1000	C22	33
	C#	C13	820	C23	150
	D	C14	820	C24	100
	D#	C15	820	C25	47
	E	C16	820	C26	——

MODEL PS3200 SIGNAL GENERATOR CT		REVISION	REVISION	REVISION	REVISION	DWG NO
DATE 20-3-77	DRAWN BY M.Yokomichi	DATE	DATE	DATE	DATE	KOD A400

KLM-69

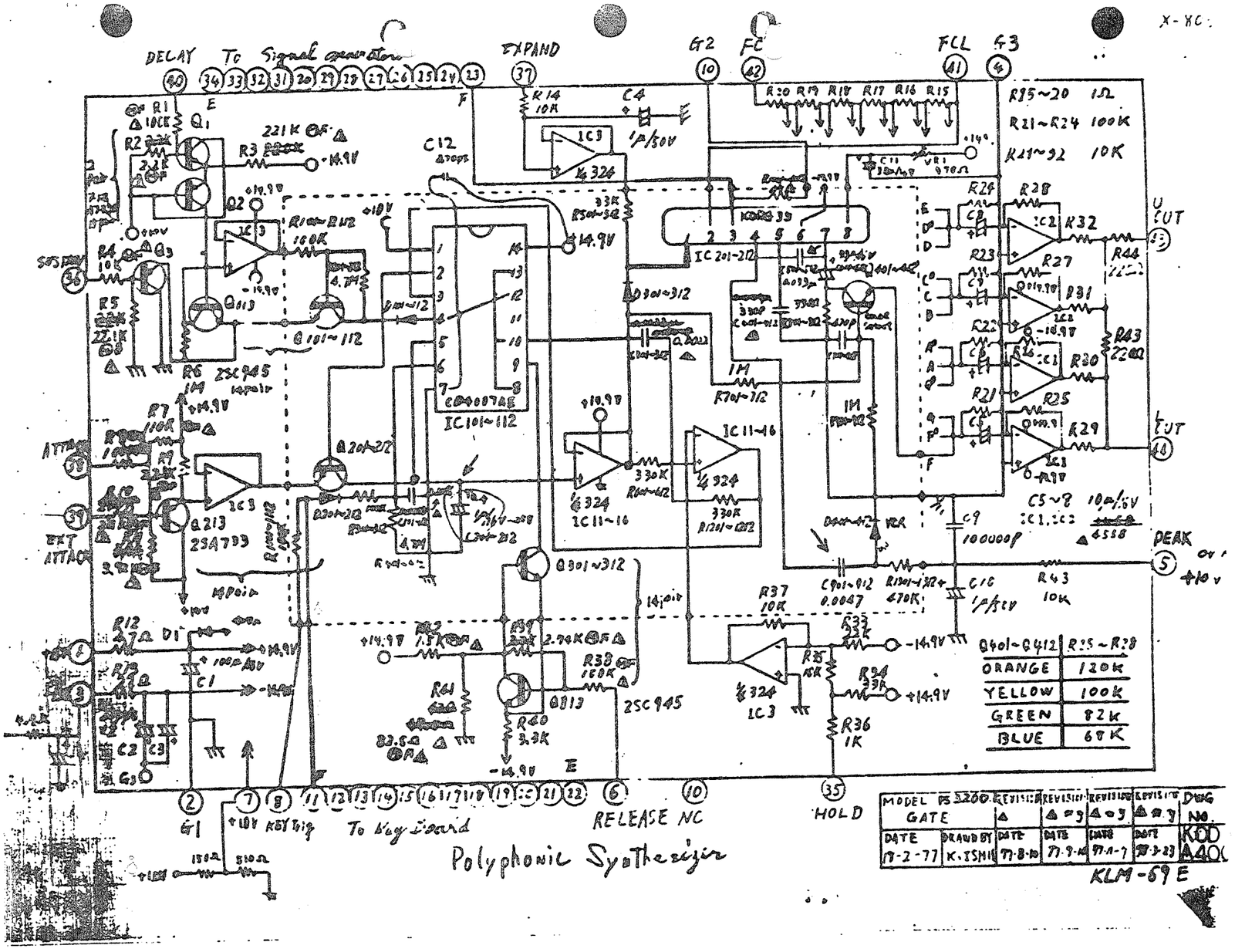
DELAY
To Signal generator
EXPAND
G2
FC
FCL
G3
R15~20 1Ω
R21~R24 100K
R21~32 10K
IC101~112
IC201~212
IC11~16
IC3
Q213
2SA733
Q301~312
Q313
2SC945
Q401~Q412 R25~R28
ORANGE 120K
YELLOW 100K
GREEN 82K
BLUE 68K
G1
To Key board
RELEASE NC
HOLD
Polyphonic Synthesizer
MODEL PS-3200 GATE
DATE 78-2-77
DRAWN BY K. ISHII
KLM-69 E

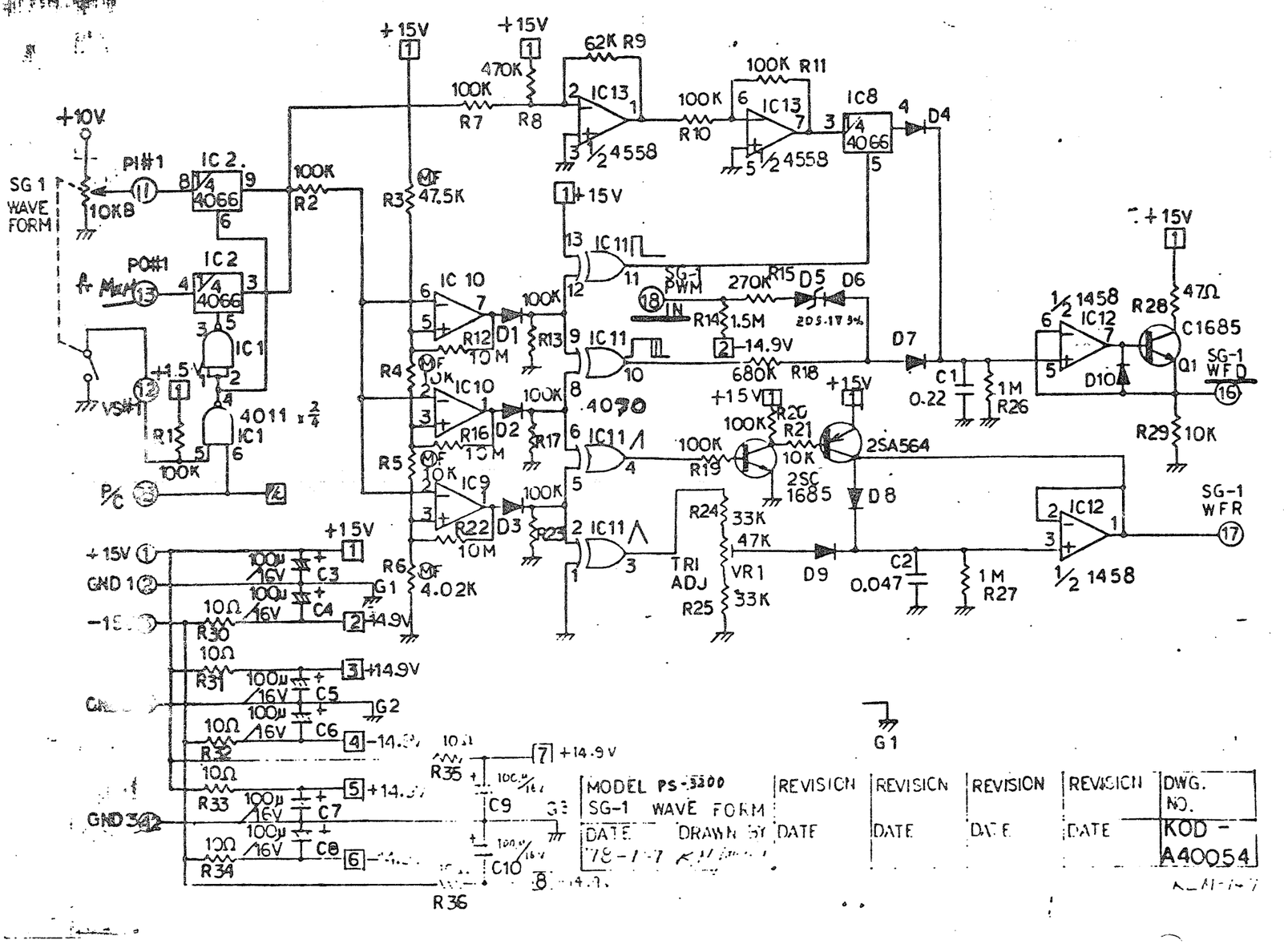
+15V
+10V
SG 1 WAVE FORM
10KB
PI#1
PO#1
IC2
4066
IC1
4011
VS#1
P/C
IC13
4558
IC8
4066
IC10
IC9
IC11
4070
IC12
1458
2SA564
2SC 1685
SG-1 PWM IN
SG-1 WFD
SG-1 WFR
TRI ADJ
VR1
GND 1
GND 3
G1
G2
G3
MODEL PS-3200 SG-1 WAVE FORM
DATE 78-1-7
DRAWN BY
REVISION
DATE
DWG. NO.
KOD - A40054