BLOCK DIAGRAM

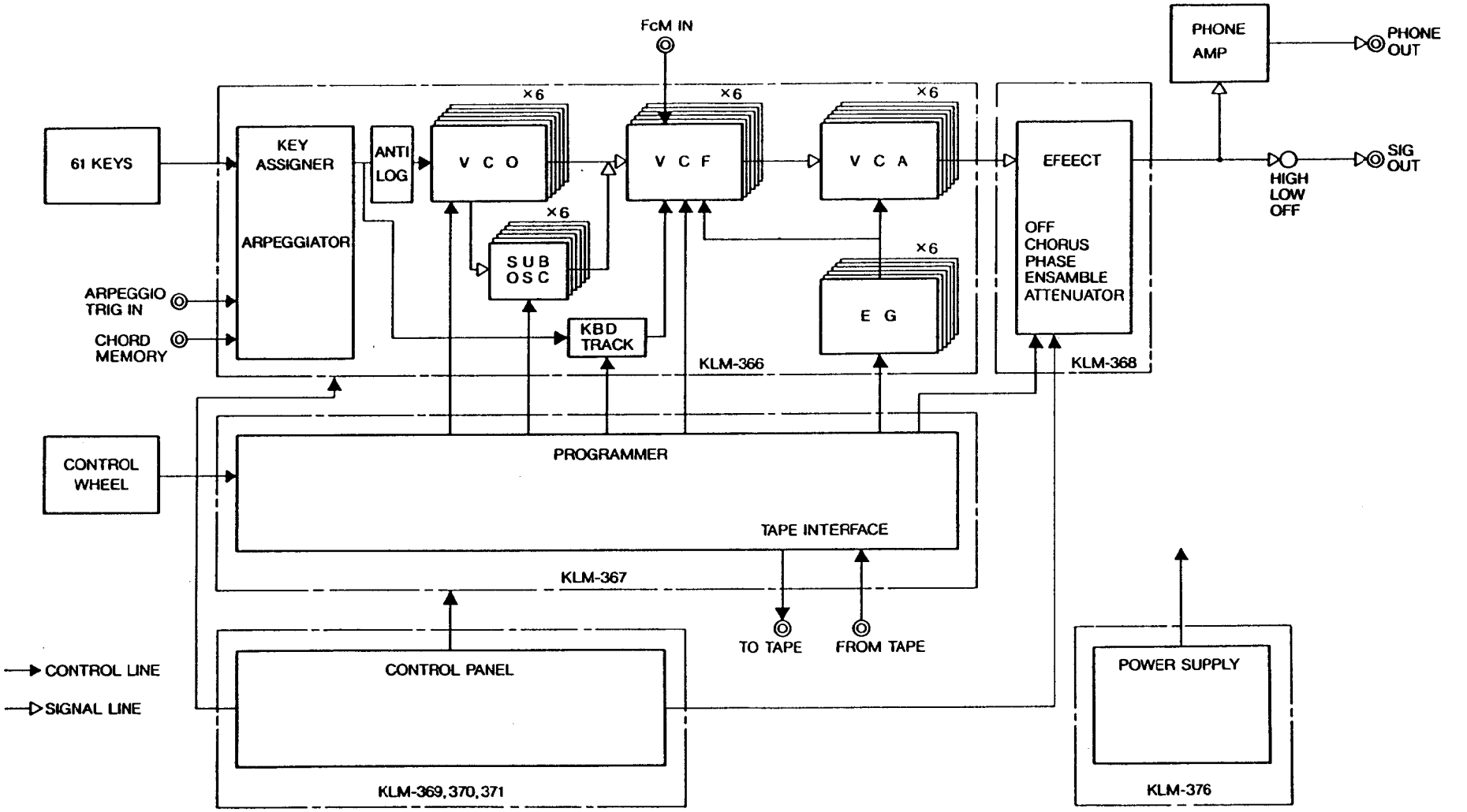

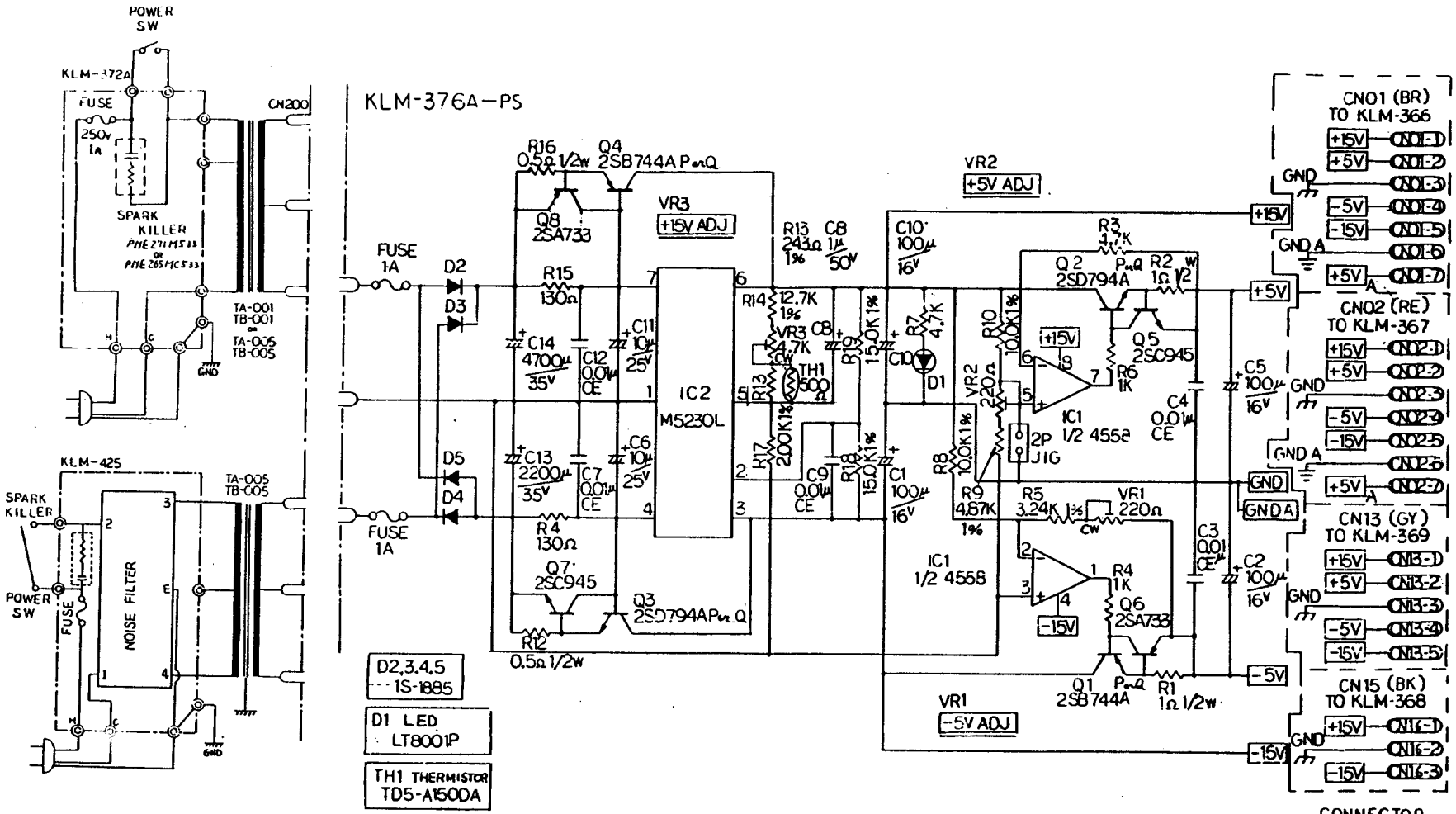

	TA		TB	
VOLTAGE	100V	120V	220V	240V
3	BROWN	ORANGE	YELLOW	GREEN
4	WHITE		WHITE	
NC	ORANGE	BROWN	GREEN	YELLOW

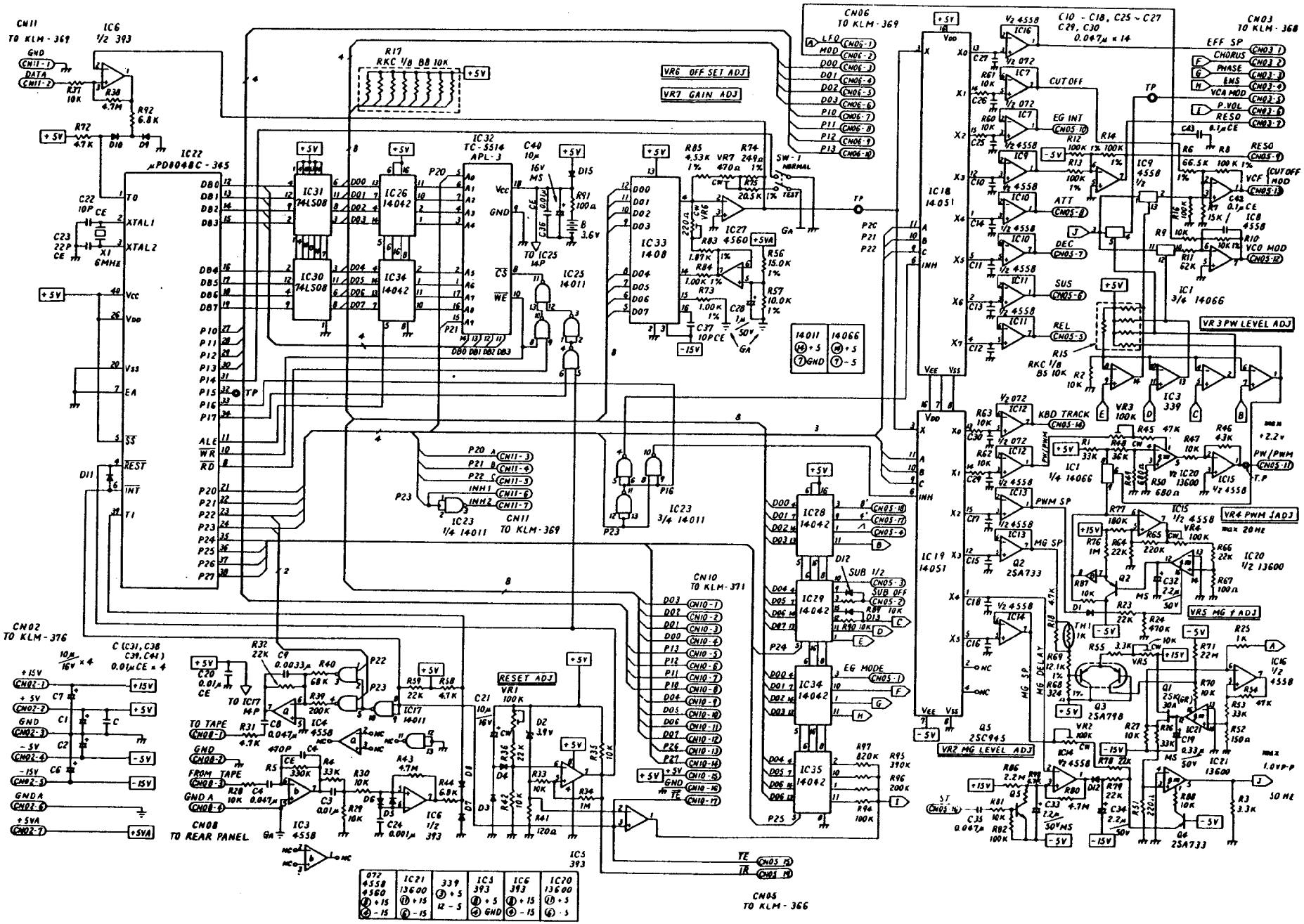
CN11 TO KLM-369
IC6 1/2 393
IC22 μPD8048C-345
IC32 TC-5514 APL-3
IC31 74LS08
IC30 74LS08
IC26 14042
IC34 14042
IC33 1408
IC25 14011
IC23 1/4 14011
IC23 3/4 14011
IC27 4560
IC28 14042
IC29 14042
IC34 14042
IC35 14042
IC18 14051
IC19 14051
IC1 3/4 14066
IC3 339
IC20 1/2 13600
IC15 1/2 4558
IC16 1/2 4558
IC21 13600
IC4 4558
IC3 4558
IC6 1/2 393
IC5 393
IC14 1/2 4558
IC14 1/2 4558
Q2 2SA733
Q3 2SA798
Q5 2SC945
Q4 2SA733
CN06 TO KLM-369
CN03 TO KLM-368
CN10 TO KLM-371
CN02 TO KLM-376
CN08 TO REAR PANEL
CN05 TO KLM-366
VR6 OFF SET ADJ
VR7 GAIN ADJ
VR3 PW LEVEL ADJ
VR4 PWM ADJ
VR5 MG f ADJ
VR2 MG LEVEL ADJ
RESET ADJ
EFF SP
CHORUS
PHASE
ENS
VCA MOD
P.VOL
RESO
CUT OFF
EG INT
ATT
DEC
SUS
REL
KBD TRACK
PWM SP
MG SP
EG MODE
SUB 1/2
SUB OFF
VCF
VCO MOD
TO TAPE
FROM TAPE
GND A
+15V
+5V
-5V
-15V
+5VA
+5VR
GND
TP
TE
IR
max +2.2v
max 20Hz
max 1.0VP-P
50 Hz

KLM-366 KEY ASSIGNER (OLD PRODUCTION)

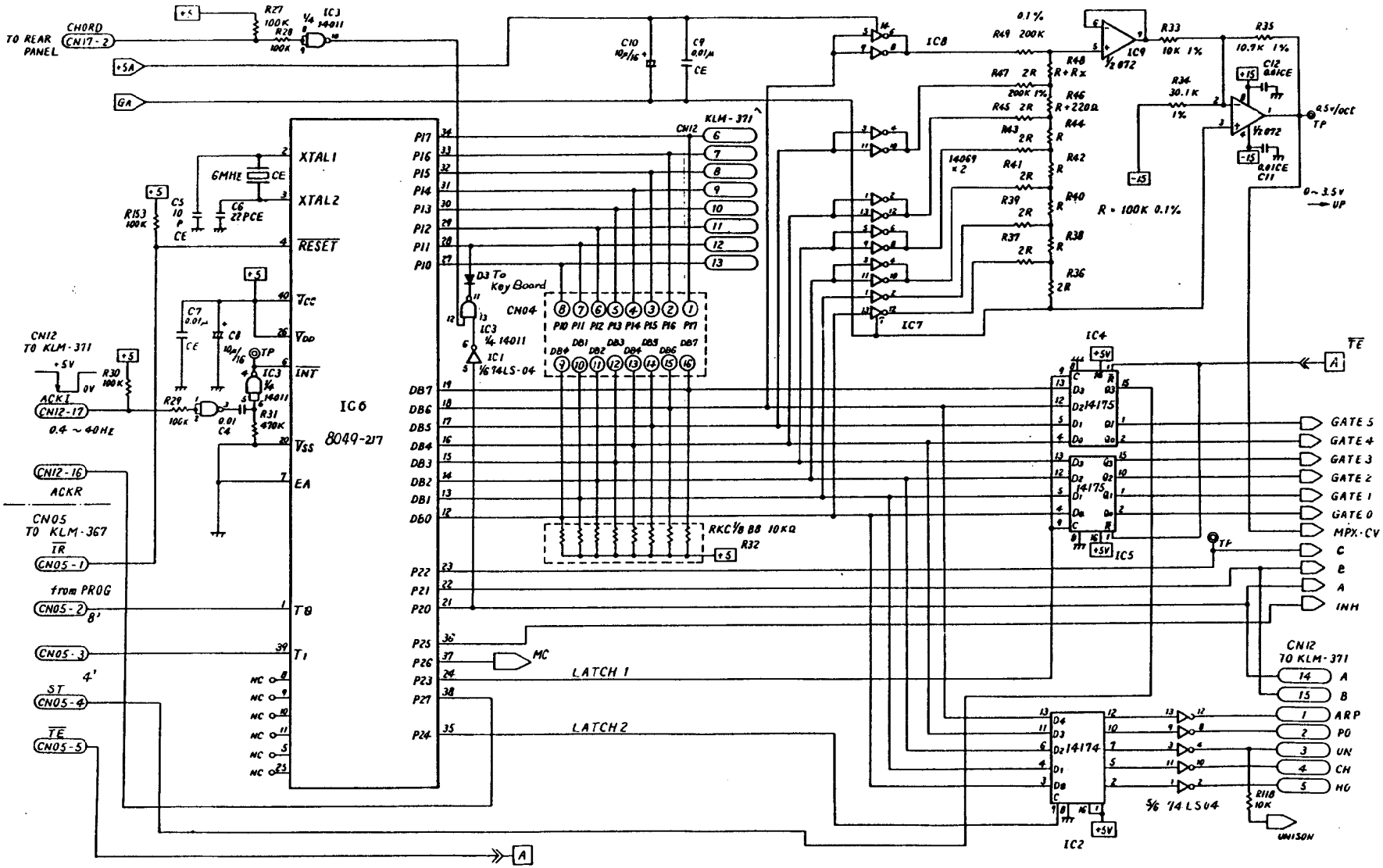

KLM-366 SYNTHESIZER (OLD PRODUCTION)

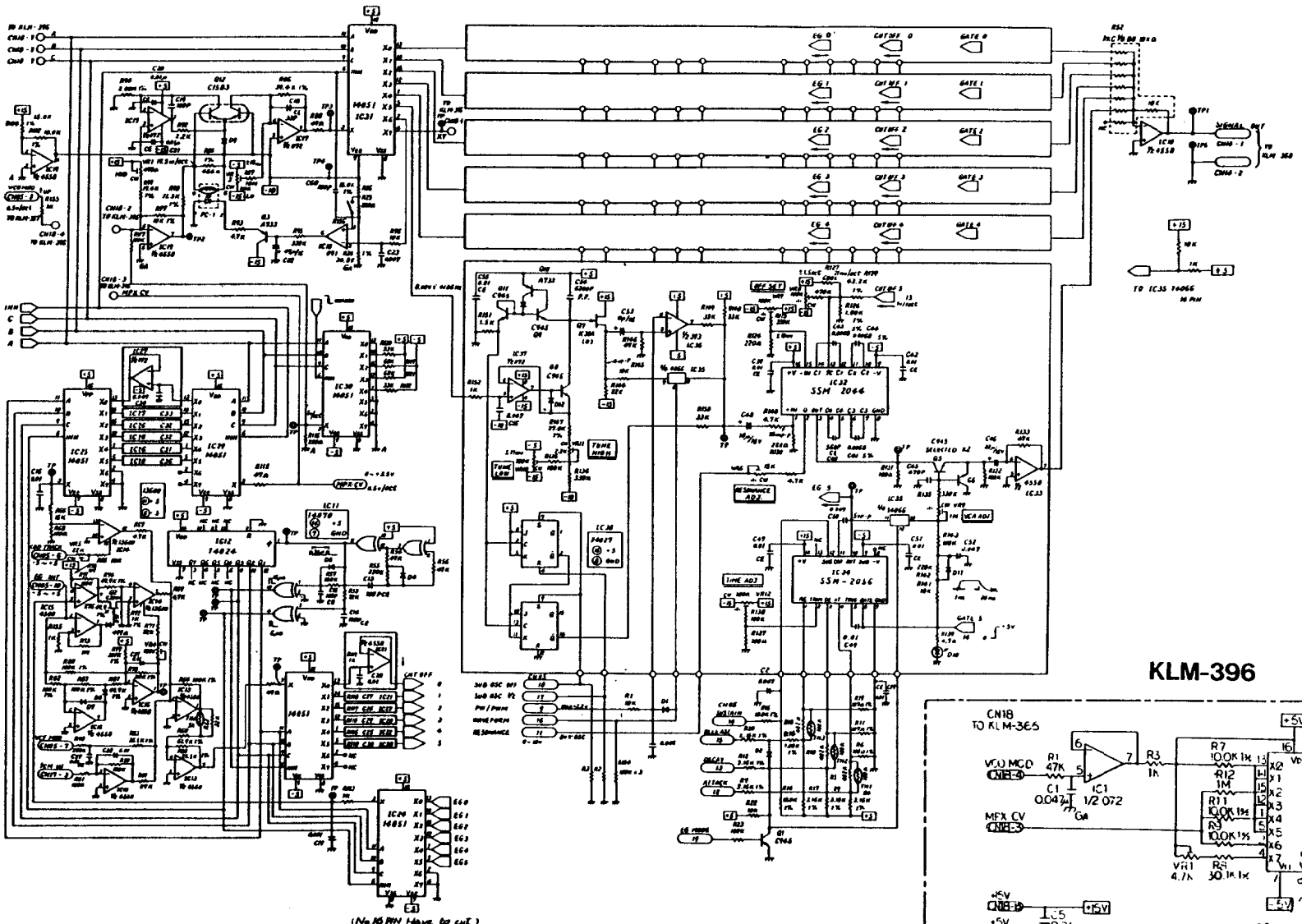

KLM-396

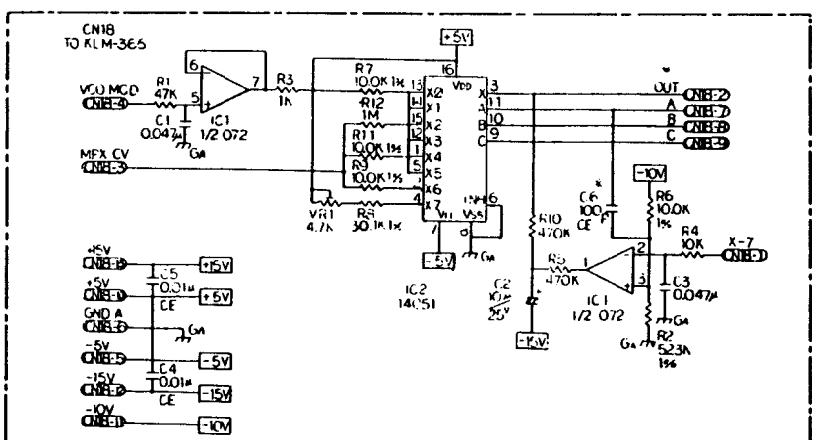

KLM-366 (NEW PRODUCTION)

(KLM-368 includes KLM-398)

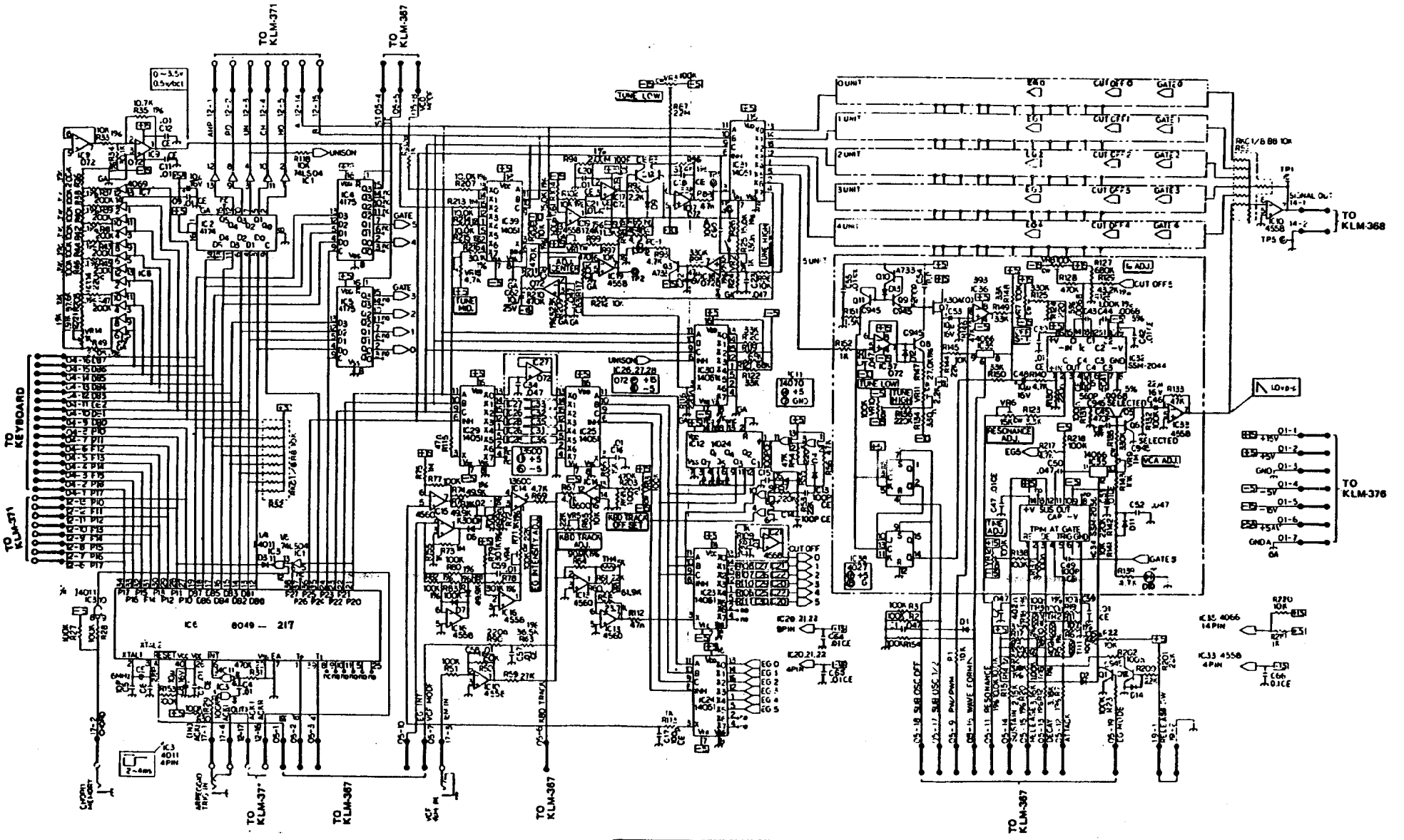

IC9, 17, 18, 37 x 3		
	NJM072	TL072
R87	22MΩ	10MΩ
R136	220KΩx6	100KΩx6

KLM-368 EFFECT

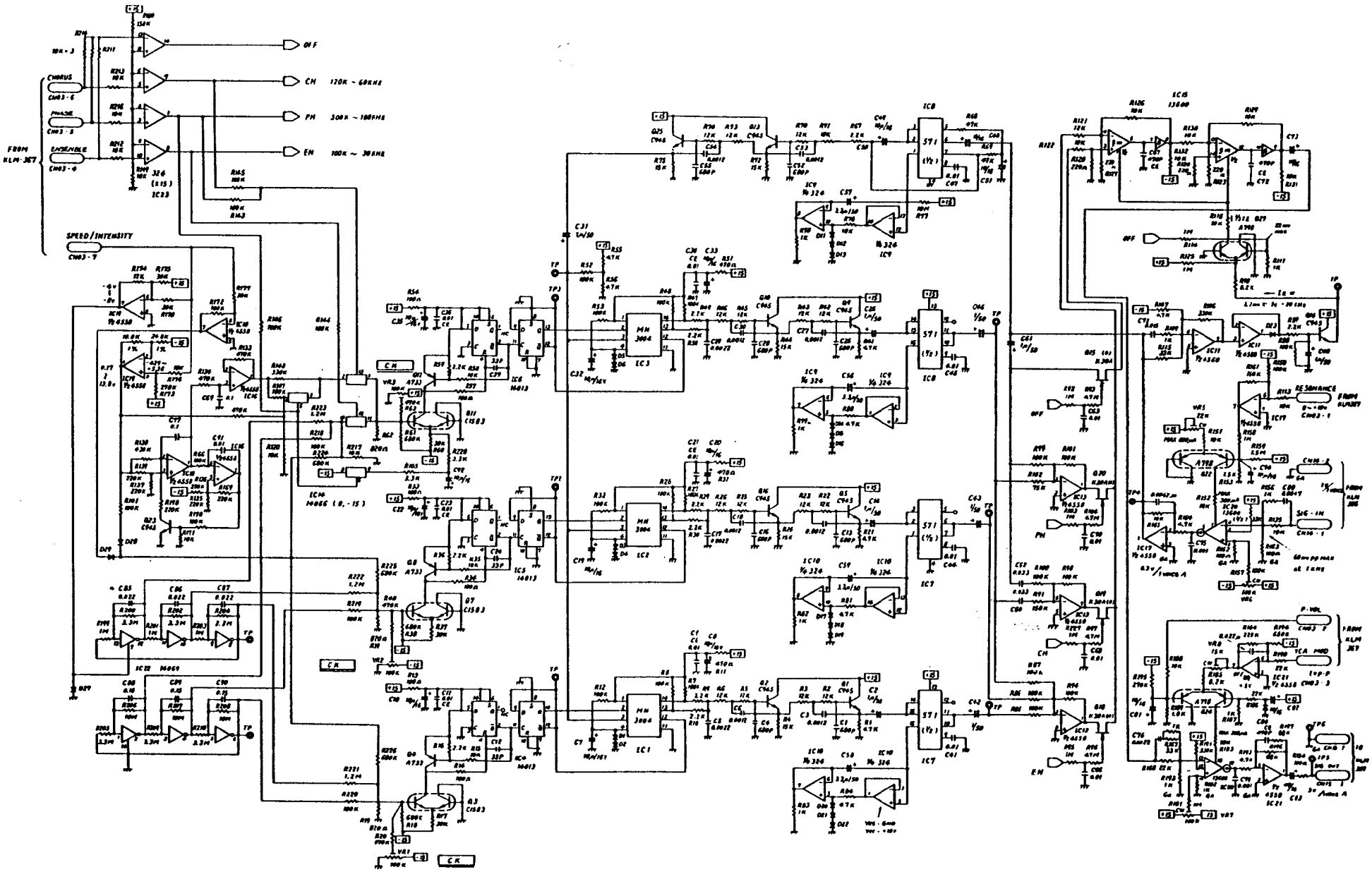

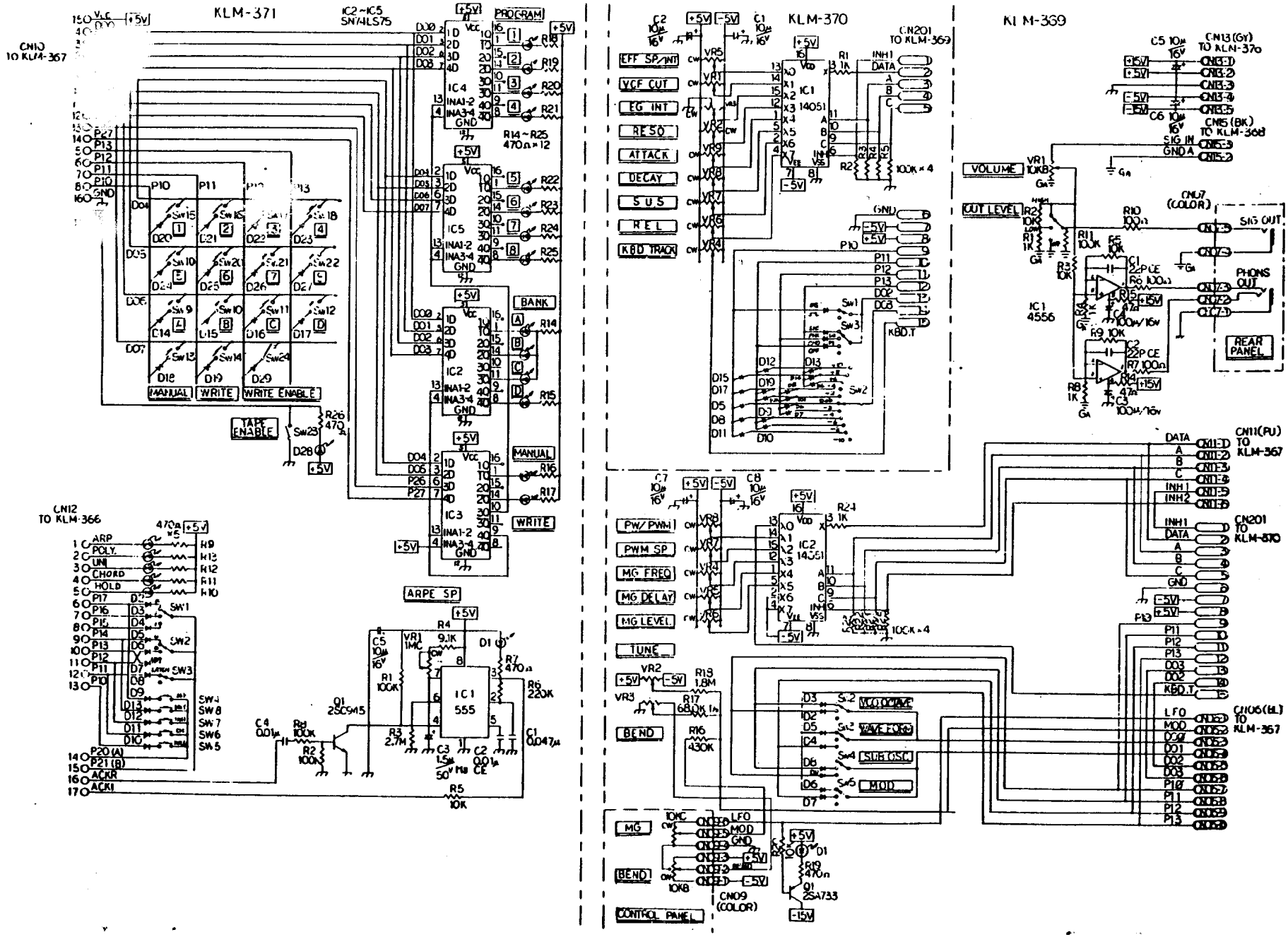
KLM-371
KLM-370
KLM-369
CN10 TO KLM-367
CN12 TO KLM-366
CN201 TO KLM-369
CN13 (GY) TO KLM-370
CN15 (BK) TO KLM-368
CN07 (COLOR)
CN11 (PU) TO KLM-367
CN201 TO KLM-370
CN06 (BL) TO KLM-367
CN09 (COLOR)
IC2~IC5 SN74LS75
PROGRAM
BANK
MANUAL
WRITE
WRITE ENABLE
TAPE ENABLE
ARPE SP
EFF SP/INT
VCF CUT
EG INT
RESO
ATTACK
DECAY
SUS
REL
KBD TRACK
PW/PWM
PWM SP
MG FREQ
MG DELAY
MG LEVEL
TUNE
BEND
MG
CONTROL PANEL
VOLUME
OUT LEVEL
SIG OUT
PHONS OUT
REAR PANEL
VCO OCTAVE
WAVE FORM
SUB OSC
MOD
IC1 14051
IC2 14051
IC1 4556
IC1 555
Q1 2SC945
Q1 2SA733
R14~R25 470Ω×12
100K×4
+5V
-5V
-15V

FIXED RESISTORS DIAGRAM

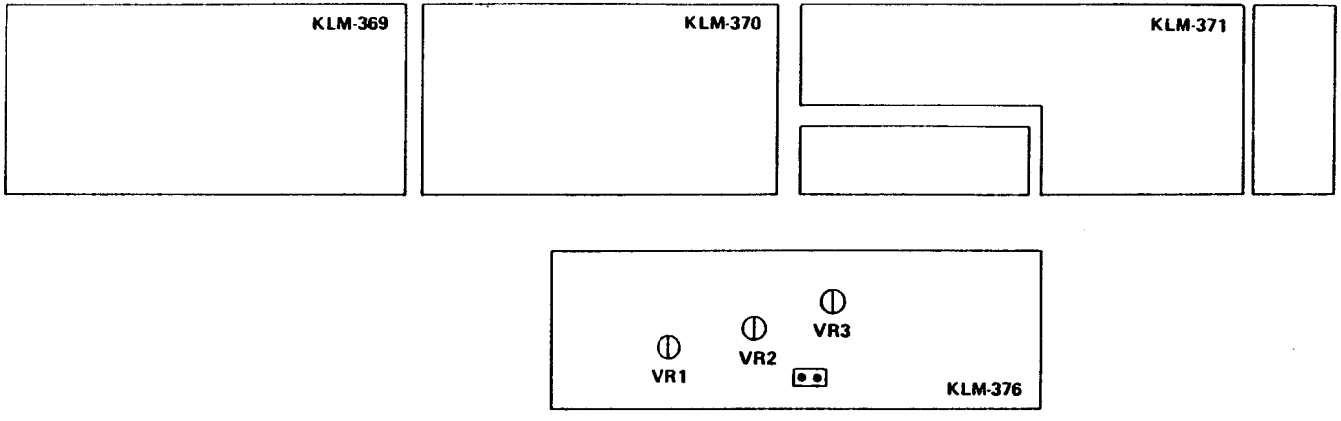

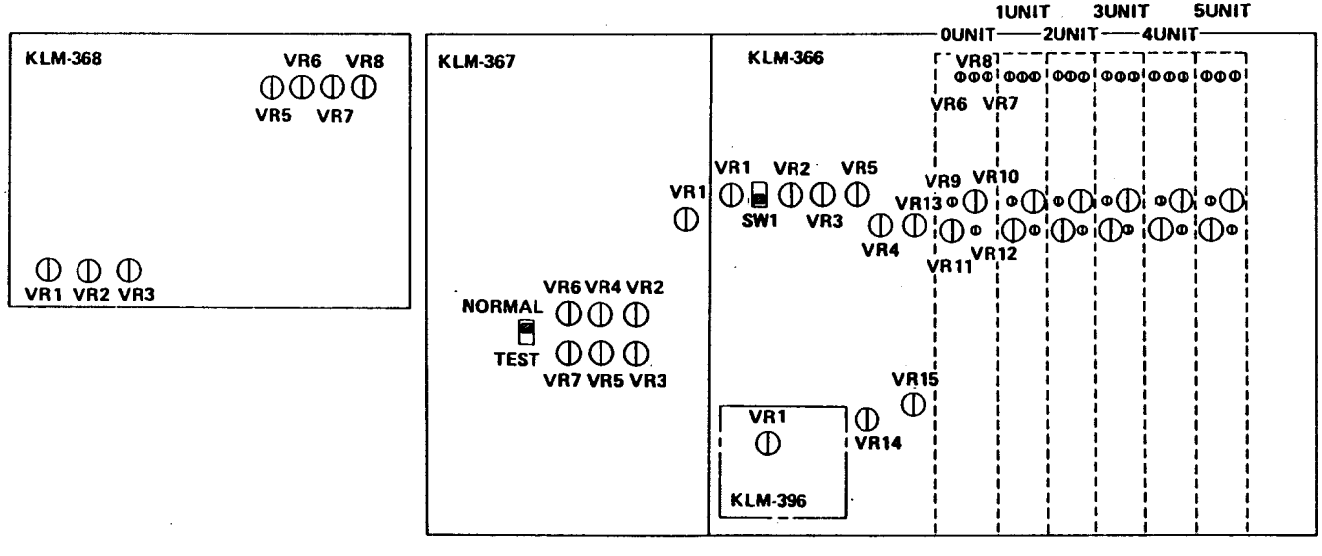

(※ VR2, VR13, VR14, VR15 → NEW PRODUCTION.)

(5) MG adjustment.

Leaving other controls at the normal setting, set MG FREQUENCY to 10, LEVEL to 10, and MOD SW to VCA.

1) Observe connector CN03-5 on oscilloscope.

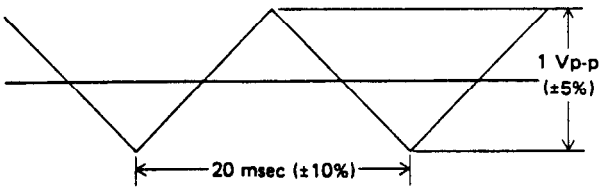

Fig. 2.

2) Adjust VR2 to obtain 1Vp-p(±5%) level; adjust VR5 to obtain frequency of 50Hz (20msec ±10%). If these values cannot be obtained after replacing IC LM13600, adjust R78 and R52 respectively.
3) Leave the other controls at the same settings as above, but change MG FREQUENCY to 0. Confirm a cycle of 10 ~ 40 sec.
   Leave other controls at same settings but change MG FREQUENCY to 4, and DELAY to 10. Confirm that the waveform appears 8 ~ 12 seconds after a key is depressed.

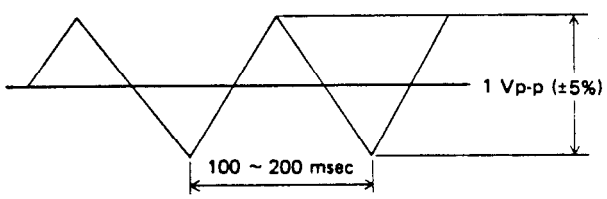

Fig. 3. (LEVEL 1Vp-p; frequency about 10Hz.)

(6) PW/PWM check and adjustment.

Set waveform to PW and PWM SPEED to 0, and PW/PWM to 10.

1) Connect oscilloscope and DVM to CN05-11.
2) Adjust VR3 to obtain +2.2V (±1%).
3) Change WAVEFORM to PWM and PWM SPEED to 10. Adjust VR4 to obtain a frequency of 20Hz.
   Use resistor inseries with VR4 if adjustment cannot be obtained in the same way as for the MG.

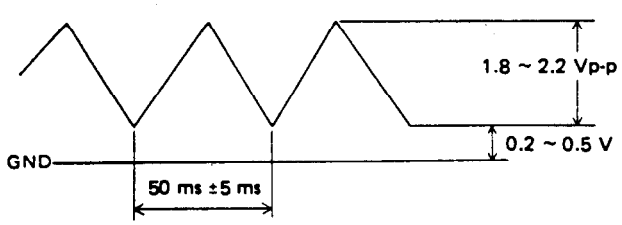

Fig. 4.

4) At this time confirm that there is a DC component of +0.2 ~ +0.5V.

4. KLM-366 check and adjustment. Obtain ground at TP5.

(1) VCF offset adjustment.

Leaving other controls at standard settings, set WAVEFORM to PW and PW/PWM to 10.

1) Use oscilloscope or DVM to check Q5 (2SC945) collector.
2) Adjust VR7 to obtain 0mV ±2mV.
3) Repeat steps 1 & 2 for units No. 0 ~ No. 5.

(2) VCA level adjustment.

Set OCTAVE to 4; leave others at normal setting.

1) Connect oscilloscope to SIG OUT (TP-1).
2) Play C3 and adjust VR9 to obtain a sawtooth waveform amplitude of 1Vp-p (±5%).
3) Repeat for units No. 0 ~ No. 5.

(3) VCF RESONANCE adjustment.

Set OCTAVE to 8, WAVEFORM to PW, and PW/PWM to 10. Check CN05-7 with DVM and adjust to obtain 0.000V ±20mV.

Check CN05-11 with DVM and adjust RESONANCE VR to obtain 8.000V ±20mV.

Leave other controls at normal setting.

1) Check SIG OUT (TP1) with oscilloscope and frequency counter.
2) Play any single key and adjust VR6 so that the VCF waveform amplitude is 300mVp-p ±20mV.
3) Repeat for units No. 0 ~ No. 5.

(4) VCF *fo* adjustment.

Set RESONANCE to 10; leave others at same setting as above (3).

1) Check oscillation frequency with frequency counter and tuner (WT-12, properly calibrated, chromatic dial set to C).
2) Adjust VR8 to obtain *fo*=523Hz (±10 cent).
3) Repeat for units No. 0 ~ No. 5.
4) Turn CUTOFF from 0 to 10 and check to see that each unit's oscillation frequency is 10 ~ 25Hz at 0 and 19 ~ 24kHz at 10; amplitude should be at least 300mVp-p throughout.

(5) EG INTENSITY adjustment.

Set WAVEFORM to PW, PW/PWM to 10, CUTOFF to 0, RESONANCE to 10, EG INT to +5. Leave others at normal setting.

1) Check SIG OUT (TP-1) with oscilloscope and frequency counter.
2) Play any single key and adjust VR4 to obtain an oscillation frequency of 5kHz (±500Hz) for units No. 0 ~ No. 5.
3) Set EG INT to +3 and check to see that there is no wide variation in pitch between units No. 0 ~ No. 5.
4) Set octave to 4', RESONANCE to 0, EG INT to +5, SUSTAIN to 0, DECAY to 5. Leave others at same setting as 3) above.
   Check to see that there is no click noise for units No. 0 ~ No. 5.

(6) KBD TRACK adjustment.

Set OCTAVE to 16', connect DVM to CN05-6, and adjust KBD TRACK VR to obtain +1.6V.

8. ADJUSTMENT PROCEDURE

Caution: This unit has been precisely adjusted at the factory before shipment. Therefore, absolutely do not turn any of the variable resistors other than those required for servicing. Testing and adjustment should be performed only after allowing the unit to warm up for ten minutes. Variable resistor locations are marked on separate charts.

* The following are required for the test procedures:
Digital voltmeter (DVM) 4-1/2 digit
Oscilloscope
Tuner Korg WT-12, etc.
Audio amp and speaker, or headphones.

1. Please check the following before proceeding.

1) Check all connections to make sure they are correct and secure.
2) Check memory back-up battery voltage. KLM-367 circuit board battery voltage should be 3.60V~4.10V.

2. Power supply check and adjustment (KLM-376).
Use a DVM to check the following test point (TP) voltages. (Obtain ground in front of LED.):

1) +15V for TP-J7. Adjust VR3 to obtain +15.000V ±50mV.
2) -15V for the right side of TP-R18. Confirm -15.000 mV ±300mV.
3) +5V for TP-J2. Adjust VR2 to obtain +5,000 ±10mV.
4) -5V for TP-J1. Adjust VR1 to obtain -5.000V ±10mV.

---

3. KLM-367 check and adjustment.

(1) Reset circuit.

With controls at the normal setting (fig. 1), connect a dummy 56kohm 2P (2-pin) connector to the KLM-376 2P plug (male). If connector not available attach 56K resister with small test clips (E-Z-Hook or Similar)

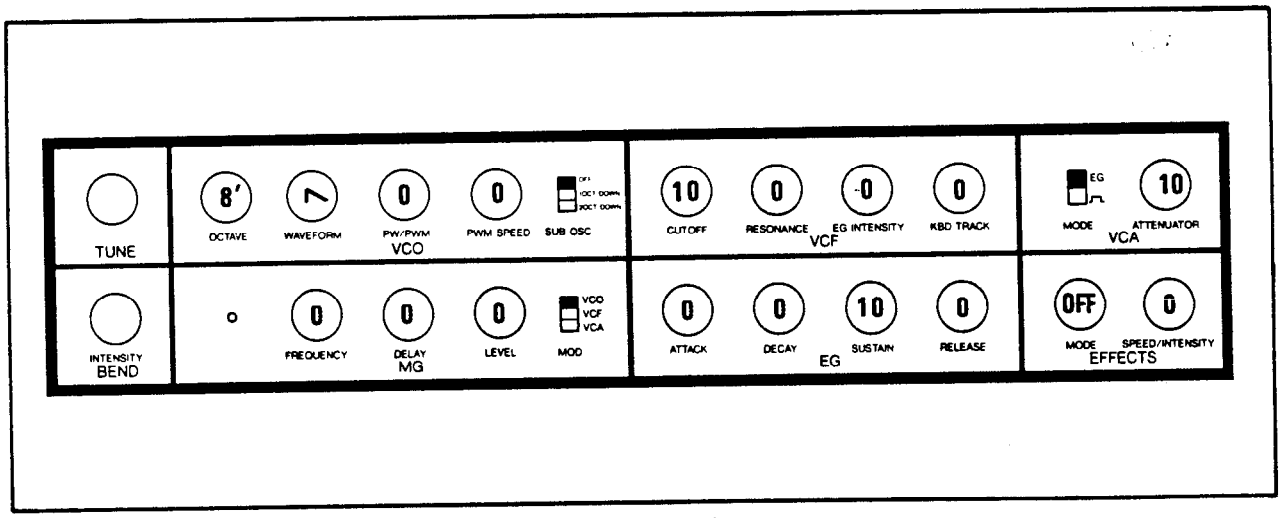

Fig. 1 Normal setting.

1) Turning VR1 from the counterclockwise position towards the clockwise direction, adjust so that the BANK A~D, MANUAL, TAPE ENABLE, and PROGRAM 1 ~ 8 LEDs all light up (instead of only BANK A and PROGRAM 1).
2) Confirm that only the BANK A and PROGRAM 1 LEDs light up when you remove the 56kohm 2P connector.

(2) D/A adjustment.

1) Set MANUAL to ON, CUTOFF to 10, and EFFECT INTENSITY to 0.
2) Set circuit board SW1 to TEST position.
3) Confirm that PROGRAM LEDs 1 & 8 alone light up when the TAPE SW is switched back and forth from DISABLE to ENABLE and back to DISABLE.
4) If LEDs other than 1 and 8 light up, adjust VR6 (offset) and VR7 (width) so that only 1 & 8 light up.
5) Turning VR7 clockwise, adjust so that the lit LEDs shift to 1 & 8. In the shift from 2 & 7 to 1 & 8 there may be some time lag between the two. If this is very large, adjust VR6 to minimize it.

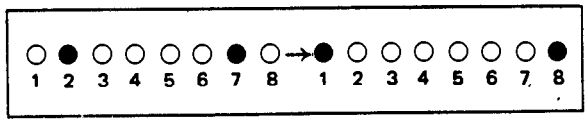

6) Switch the circuit board SW1 to the NORMAL position. Confirm that LEDs 1 & 8 remain lit up without any change.
7) Confirm that output DC click noise is within 6Vp-p when power is switched off.
8) Turn power on and confirm that the BANK A and PROGRAM 1 LEDs light up.

Leave others at same setting as (4).

1) C1 ~ C2 should sound approximately like a scale.
2) Adjust VR5 if necessary.

(7) PITCH check and adjustment.

Set OCTAVE to 4'; leave others at normal.

1) Change circuit board slide switch to opposite position. (away from VR1)
2) Play C6 and adjust VR11 to obtain Ocent.
3) Repeat step 2) for units No. 0 ~ No. 5.
4) Play C2 and adjust KLM-396 VR1 to obtain 0 cent. Do this for one unit.
5) Set OCTAVE to 16', play C2 and adjust VR10 to obtain 0 cent.
6) Repeat step 5) for each unit. (VR3 is used to adjust for deviation of all units.)
7) Play C1, C2, C3, C4, C5, and C6, and confirm that each unit's deviation is within specifications. (Refer to Poly-6 deviation standards.)

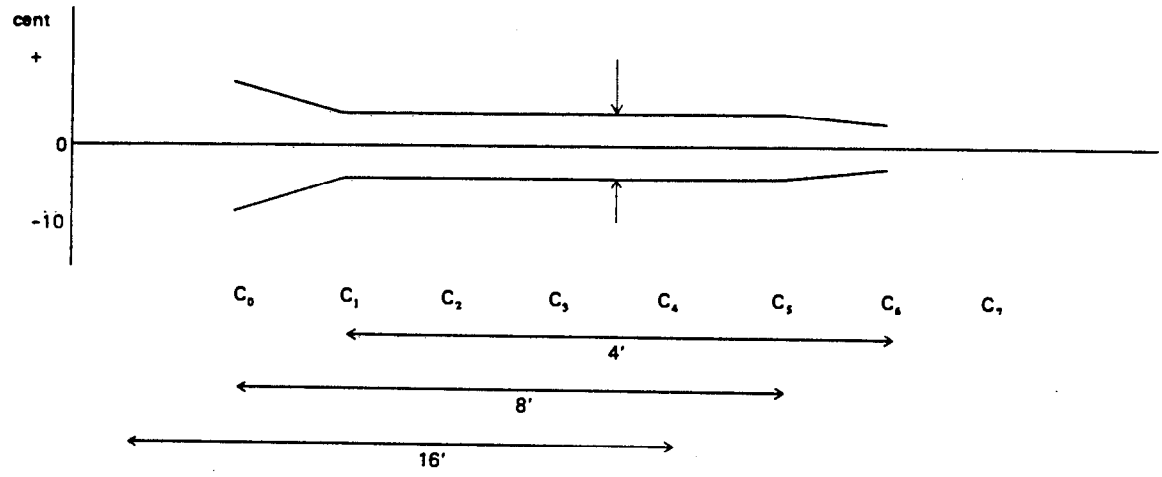

PS-6 VCO adjacent octave deviation standards at the final inspection at our factory

8) Check to confirm that deviation between adjacent octaves is within specifications. (for unit 0 only.) (Refer to VCO adjacent octave deviation standards.)

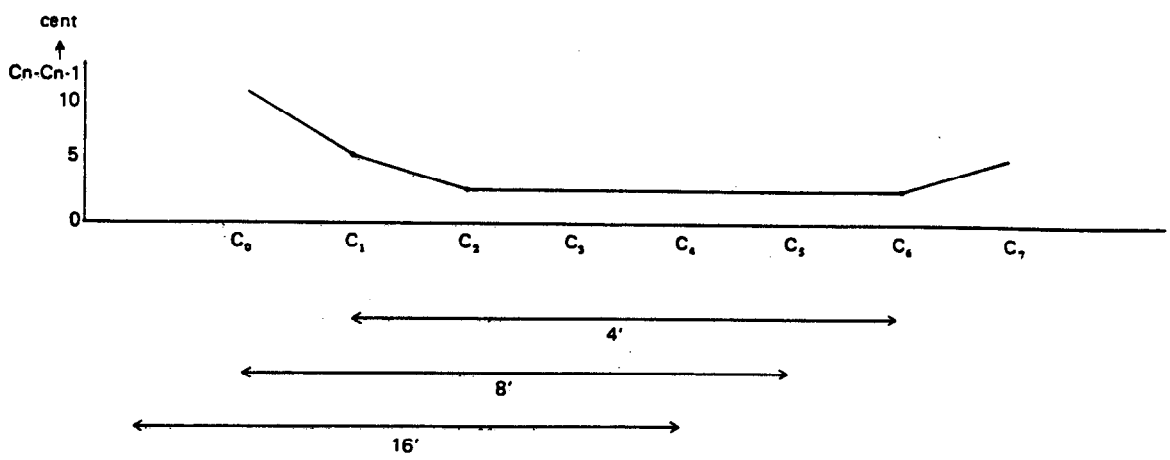

PS-6 VCO octave deviation standards at the final inspection at our factory

9) Confirm that difference between 4' D#4 and E4 is within 2 cents.
(Switch between POLY and UNISON and check unit 0 only.)
10) Switch SW1 to the front while playing C6 (stretch tuning) and confirm +8 ~ +12 cent.
11) Confirm difference of no more than 2 cents between 4' G5 and G#5. Unit 0 only is OK.
12) Confirm that KLM-366'S VR1 is approximately in the center position and not turned in the clockwise or counterclockwise directions.

(3) EG TIME check and adjustment.

1) Attack time adjustment.
Check CN05-12 with DVM and adjust ATTACK VR to obtain +0.9V ±20mV. Set SUSTAIN to 0; leave others at normal setting.
2) Test top side of R143 10K with oscilloscope. (Set sweep mode to normal.)
3) Set ARPEGGIO to ON, ARPEGGIO SPEED to 2.5, LATCH to ON, and UNISON to ON.
4. Play any single key and adjust VR12 to obtain an attack time of 250msec ±10msec. See fig. 5.

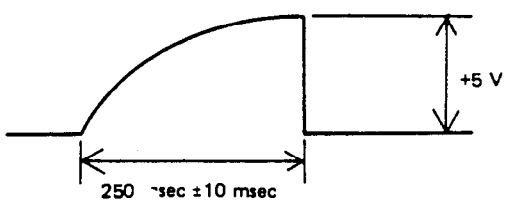

Fig. 5

5) Repeat steps 2) ~ 4) for units 0 ~ 5.
6) Set ATTACK to 10; leave others at setting 1).
Repeatedly play a single key and confirm that differences between the fade-out of the six notes are within 5 seconds and that all fade out within 15 ~ 25 seconds.
7) DECAY TIME check.
Set OCTAVE to 4', WAVEFORM to PW, PW/PWM to 10, CUTOFF to 2, RESONANCE to 10, EG INTENSITY to +3, DECAY to 8, SUSTAIN to 0, ARPEGGIO to ON, ARPEGGIO SPEED to 1 ~ 3, LATCH to ON, and KEY ASSIGN MODE to POLY. Leave others at normal.
Listen to each unit and check to see that there are no deviations.
8) RELEASE TIME check.
Set DECAY to 0, SUSTAIN to 10, and RELEASE to 8; leave others at same as 7) above.
Listen to each unit and check to see that there are no deviations.

5. KLM-368 check and adjustment.

(1) HEADPHONE AMP OFFSET adjustment.

1) Use normal setting. Connect oscilloscope and DVM to TP-4 (GND is TP-6). Adjust VR6 to obtain offset of 0mV ±20mV.

(2) HEADPHONE AMP LEVEL adjustment.

Set OCTAVE to 4'; leave others at normal. Check point is same as (1) above.
1) Play C3 and adjust VR5 to obtain a sawtooth waveform amplitude of 0.3Vp-p (±5%).
2) Check to be sure there is no waveform distortion at this point.

(3) OUTPUT AMP OFFSET adjustment.

Set WAVEFORM to PW, PW/PWM to 10, MG FREQUENCY to 7, LEVEL to 10, and MOD to VCA.
Check SIG OUT (TP-5) with oscilloscope.
1) Adjust VR7 to minimize waveform amplitude. See fig. 6.

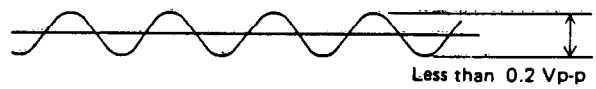

Fig. 6

(4) OUTPUT AMP LEVEL adjustment.

Set OCTAVE to 4'; leave others at normal.
1) Play C3 and adjust VR8 to obtain a sawtooth waveform amplitude of 3Vp-p (±5%).
2) Confirm that click noise occuring when power is turned off is less than volume of sound made by playing C3. DC click noise amplitude should be no greater than 6Vp-p.

(5) BBD CLOCK adjustment.

Set EFFECTS MODE to ENSEMBLE, SPEED/INTENSITY to 10. Leave others at normal.
1) Check TP-1 with oscilloscope.
2) Adjust VR1 to obtain maximum clock cycle of 30μsec. See fig. 7.

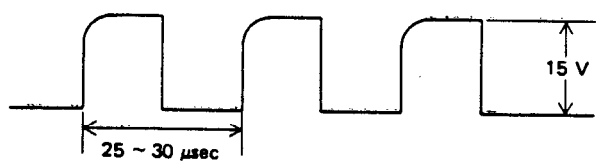

Fig. 7

3) Check TP-2 with oscilloscope.
4) Adjust VR2 to obtain maximum clock cycle of 30μsec.
5) Check TP-3 with oscilloscope.
6) Adjust VR3 to obtain maximum clock cycle of 30μsec.

7) Set INTENSITY to 0 and check TP-3 with oscilloscope.
   Set EFFECT to ENSEMBLE and confirm that the minimum ENSEMBLE clock time is 4 ~ 8μsec.
   Set EFFECT to PHASE and confirm that maximum PHASE clock cycle is 8 ~ 12μsec, and minimum is 1.5 ~ 3μsec.
8) Set INT to 10 and confirm that maximum PHASE clock cycle is 2.5 ~ 3.5μsec, and minimum is 1.0 ~ 2.0μsec.
9) SET INT to 0 after completing the above.
10) Set EFFECT to CHORUS and confirm maximum clock cycle of 16 ~ 22μsec., and minimum of 8 ~ 12μsec.

(6) EFFECT WAVEFORM check

Use normal setting and check TP-5 with oscilloscope (1V, 2msec.) Play C1 and check the various waveforms while switching from one EFFECT MODE to another.

1) EFFECT MODE at OFF.



2) EFFECT MODE at CHORUS.

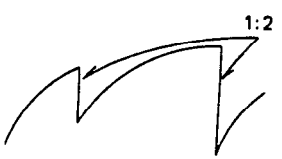

3) EFFECT MODE at PHASE.

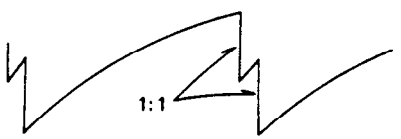

4) EFFECT MODE at ENSEMBLE.

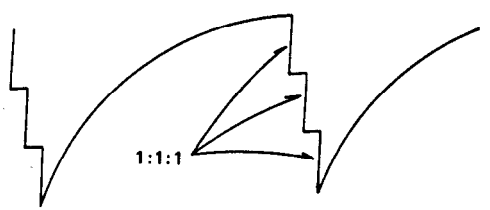

Note: Note that the CHORUS waveform is not as full as the PHASE or ENSEMBLE waveforms.

Fig. 8