KORG

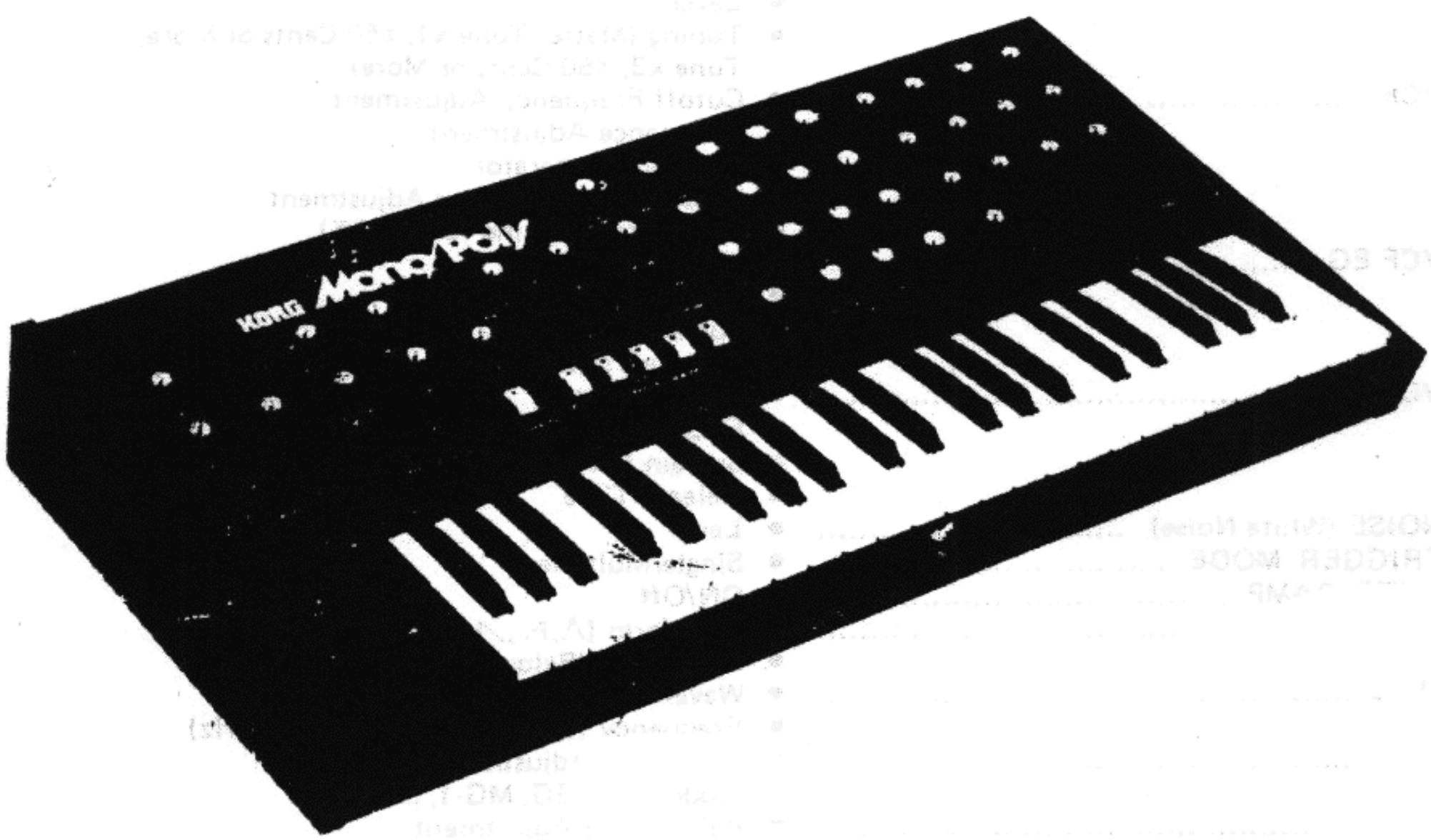

4VCO SYNTHESIZER
SERVICE MANUAL MONO/POLY

CONTENTS

1. SPECIFICATIONS 1
2. STRUCTURAL DIAGRAM 2
3. BLOCK DIAGRAM 3
4. CIRCUIT DIAGRAM 5
5. PC BOARD 13
6. INTERCHANGE LIST OF CONNECTOR TERMINAL NUMBER 18
7. SEMI-FIXED RESISTORS DIAGRAM ... 19
8. ADJUSTMENT PROCEDURE 20
9. PARTS LIST 23

1. SPECIFICATIONS

KEYBOARD	• 44 Keys (F ~ C)
VCO (x4)	• Waveform (∧, ⋀, PWM, PW) • Octave Selector (16', 8', 4', 2'0) • Level • Tuning (Master Tune x1, ±50 Cents or More, Tune x3, ±50 Cents or More)
VCF	• Cutoff Frequency Adjustment • Resonance Adjustment • Envelope Generator • Modulation Sensitivity Adjustment • Keyboard Tracking (0 ~ 150%)
VCF EG	• Attack Time • Decay Time • Sustain Level • Release Time
VCA EG	• Attack Time • Decay Time • Sustain Level • Release Time
NOISE (White Noise)	• Level
TRIGGER MODE	• Single/Multiple
AUTO DAMP	• ON/Off
MG-1	• Waveform (∧, ⋀, ◿, ⊓) • Frequency (Below 0.1Hz to above 20Hz)
MG-2	• Waveform (∧) • Frequency (Below 0.1Hz to above 30Hz)
PWM	• Sensitivity Adjustment • Mode (VCF EG, MG-1, MG-2)
PW	• Pulse Width Adjustment
PORTAMENTO	• Time Adjustment
DETUNE	• VCO4 (−35 → +35) when VCO2 is (+35 → −35)
TRANSPOSE	• Up/Normal/Down
EFFECT	• On/Off • Mode (Synchro, Cross-Modulation, Synchro + Cross-Modulation) • Connection (Single, Double) • Frequency Modulation Sensitivity Adjustment • Cross-Modulation Sensitivity Adjustment
KEY ASSIGN MODE	• Poly • Unison/Share • Unison • Chord Memory • Hold
ARPEGGIATOR	• Range (Full, 2oct, 1oct) • Mode (Up, Down, Up/Down) • Arpeggio (Off, On, Latch)
WHEEL (x2)	• Bend (Sensitivity Adjustment, VCO 1/Slave BCO, Pitch, VCF) • MG-1 (Sensitivity Adjustment, VCO1/ Slave VCO, Pitch, VCF)
OUTPUTS	• Level Selector (Off, Low, High) • Volume
INPUT JACKS	• Arpeggio Trigger In (GND) • Portamento (GND) • VCF fcM In (−5V ~ +5V) • VCO FM In (−5V ~ +5V) • Trigger In • CV In (Oct/V)
OUTPUT JACKS	• Trigger Out • CV Out (Oct/V) • Headphone • Output
TRIGGER POLARITY SWITCH	• ⊣ GND, ⊣ +15V GND
DIMENSIONS	• 744(W) x 450(D) x 144(H) mm
WEIGHT	• 12kg
ACCESSORIES	• Connection Cord

2. STRUCTURAL DIAGRAM

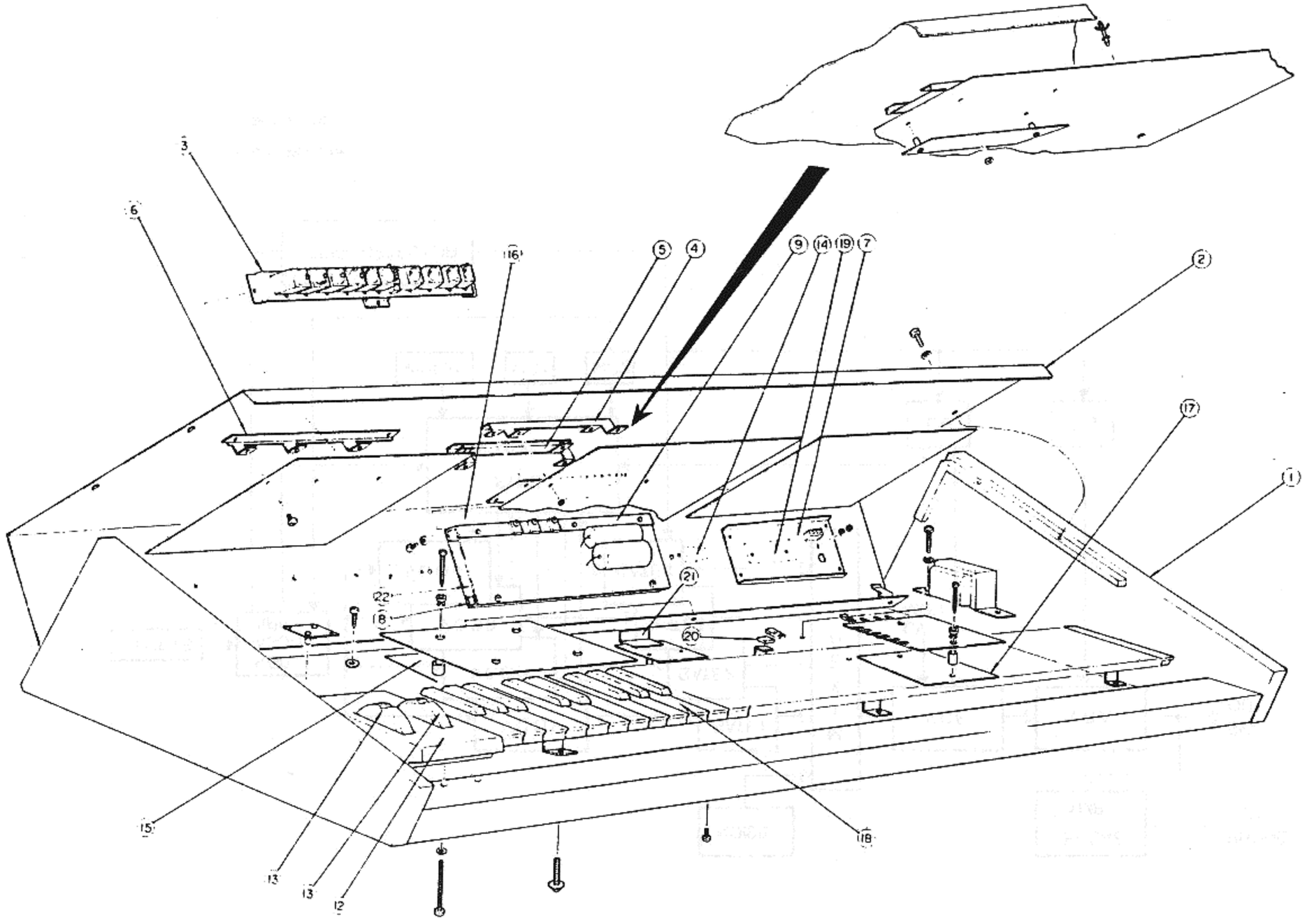

PART NO.	PART NAME	REMARKS
1	Wooden case	KOC-D1004
2	Front panel	KOC-C20112
3	Phone jack plate	KOC-C30177
4	Metal fitting of tact board	KOC-C40395 No.1 (U)
5	Metal fitting of tact board	KOC-C40395 No.2 (L)
6	Metal fitting of MG C. B	KOC-C40396
7	Power plate	KOC-C40397
8	Metal fitting of KLM-376	KOC-C40405
9	Radiation board	KOC-C40406
10	Metal fitting of slide sw	KOC-C40266
11	Control panel	KOC-E20028
12	Control wheel	KOC-E40091
13	Key board	ESK-721 (E-C)
14	Model number plate	KOC-C40144
15	Small radiation board	KOC-C40416

3.BLOCK DIAGRAM (1)

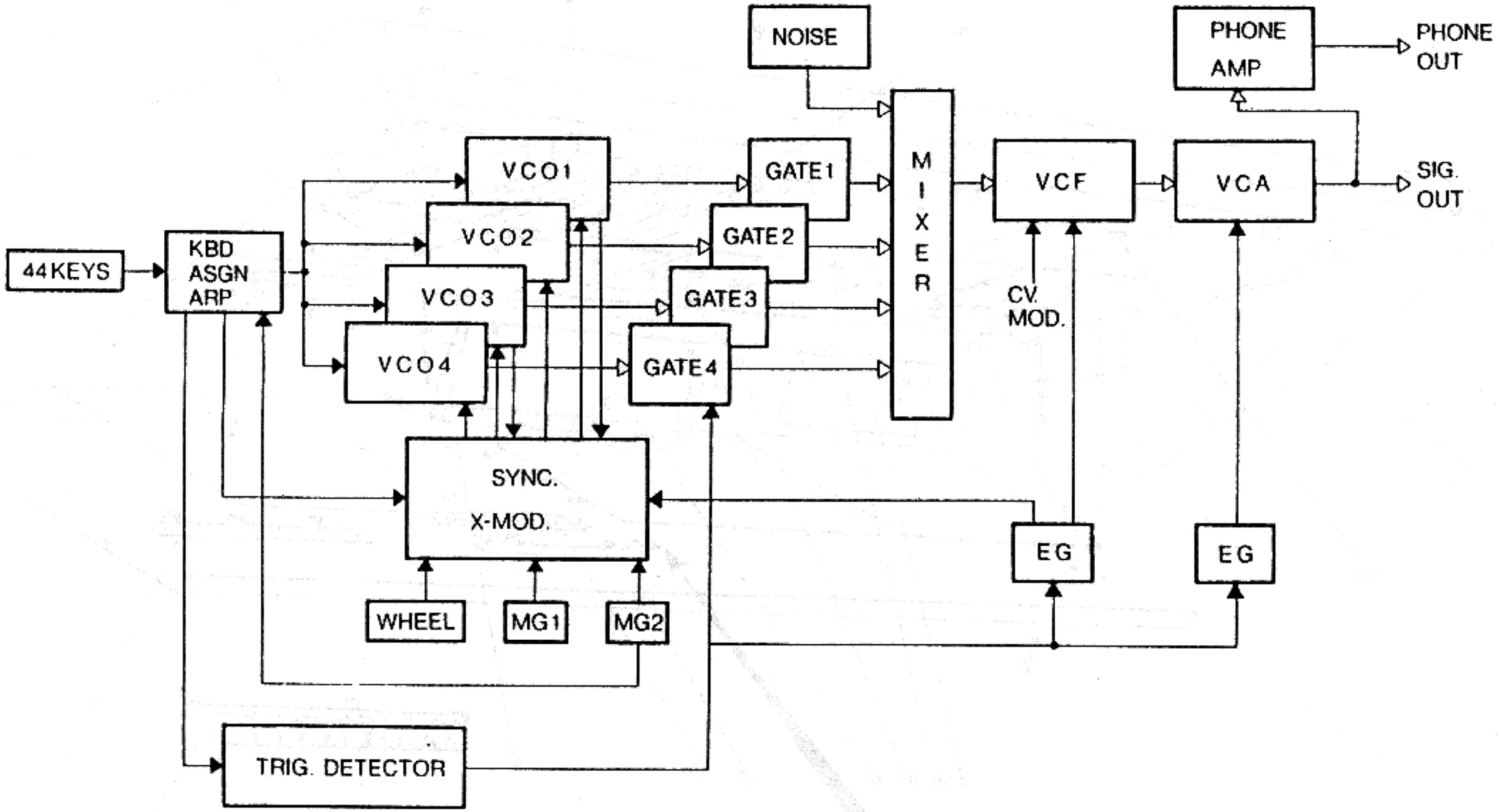

BLOCK DIAGRAM (2)

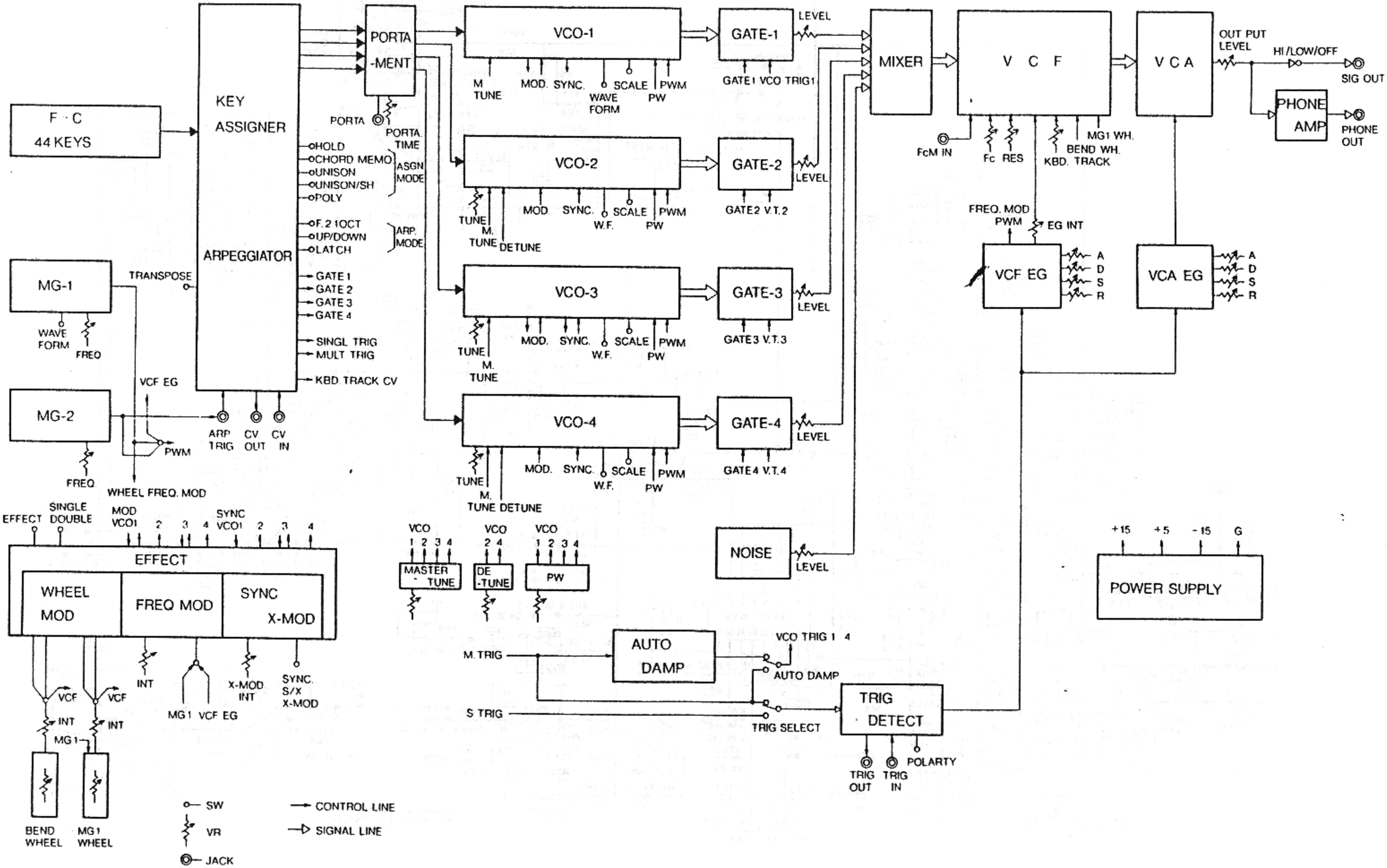

KLM-327 (OLD PRODUCTION)

KLM-327 has been replaced by KLM-355 (New production)

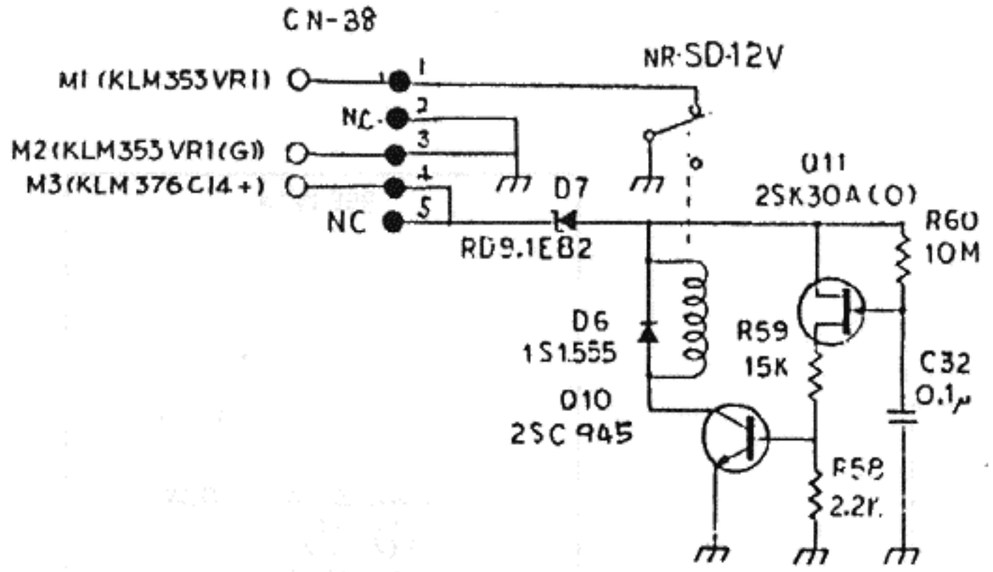

KLM-398

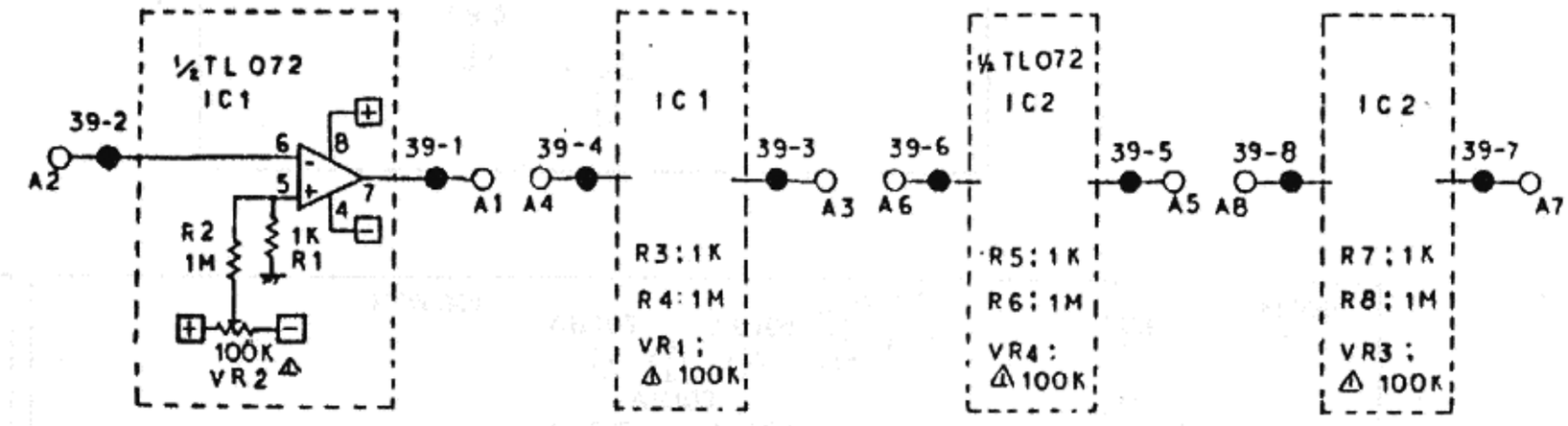

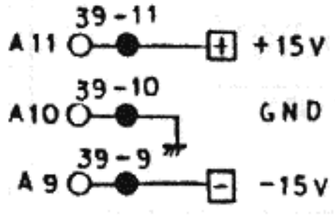

4. CIRCUIT DIAGRAM

KLM-353

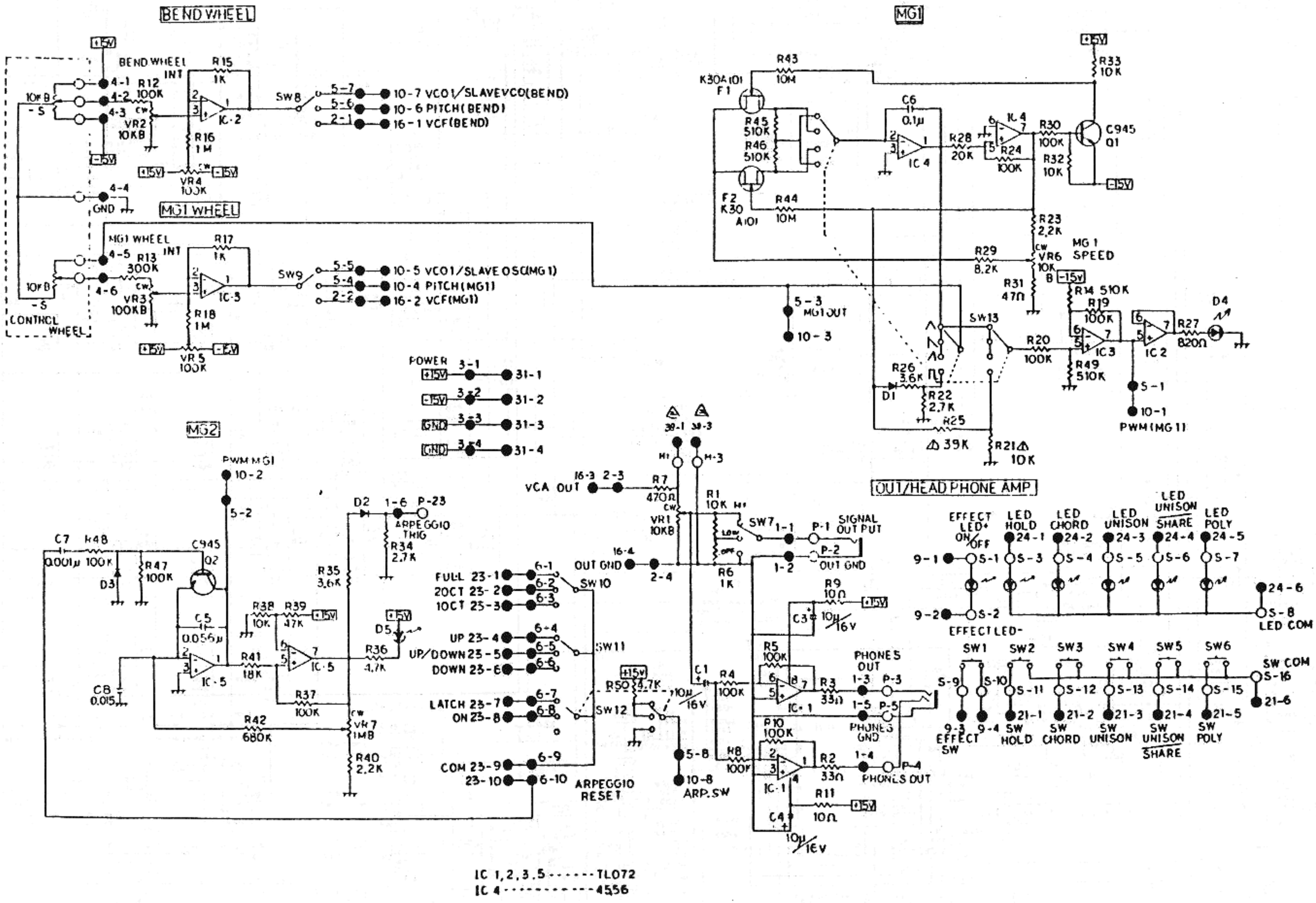

IC 1,2,3,5 ------ TL072
IC 4 ---------- 4556

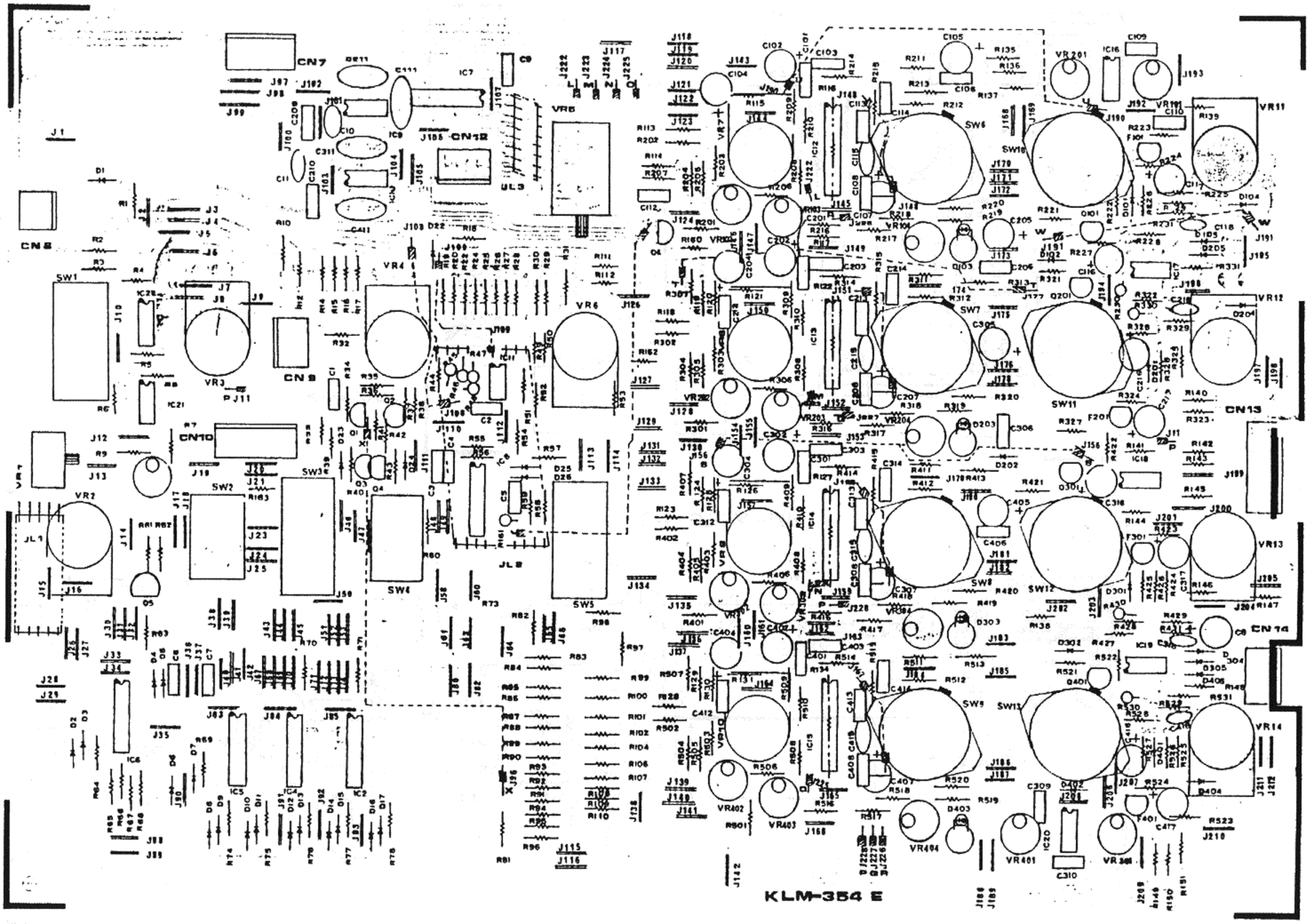
CN7
CN12
CN8
CN9
CN10
CN13
CN14
SW1
SW2
SW3
SW4
SW5
SW6
SW7
SW8
SW9
SW10
SW11
SW12
SW13
VR1
VR2
VR3
VR4
VR5
VR6
VR7
VR8
VR9
VR10
VR11
VR12
VR13
VR14
VR201
VR401
VR402
VR403
VR404
IC1
IC2
IC5
IC6
IC7
IC9
IC13
IC14
IC15
IC16
IC18
IC19
IC20
IC21
Q1
Q2
Q3
Q4
Q5
Q101
Q201
Q401
D1
D2
D3
D4
D5
D6
D7
D8
D9
D10
D11
D12
D13
D14
D15
D16
D17
D22
D25
D26
D101
D104
D105
D201
D202
D203
D204
D205
D301
D303
D304
D305
D306
D401
D402
D404
F201
F301
F401
JL1
JL2
PJ11

KLM-354 E

KLM-354

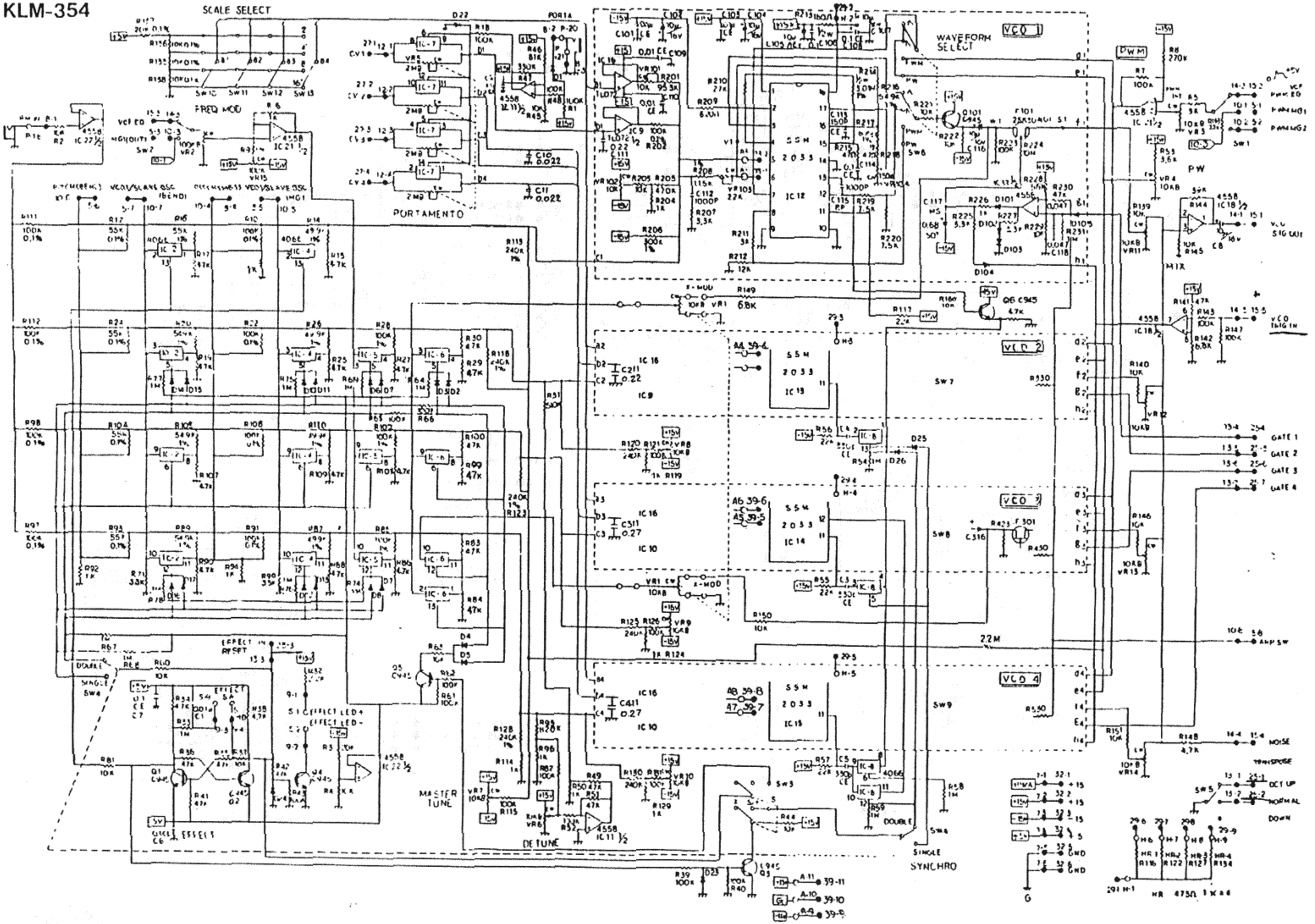
SCALE SELECT
FREQ MOD
PORTAMENTO
WAVEFORM SELECT
VCO 1
VCO 2
VCO 3
VCO 4
PWM
PW
MASTER TUNE
DETUNE
SYNCHRO
EFFECT
GATE 1
GATE 2
GATE 3
GATE 4
NOISE
TRANSPOSE
OCT UP
NORMAL
DOWN

VCF VCA 2EG NOISE

KLM-355C

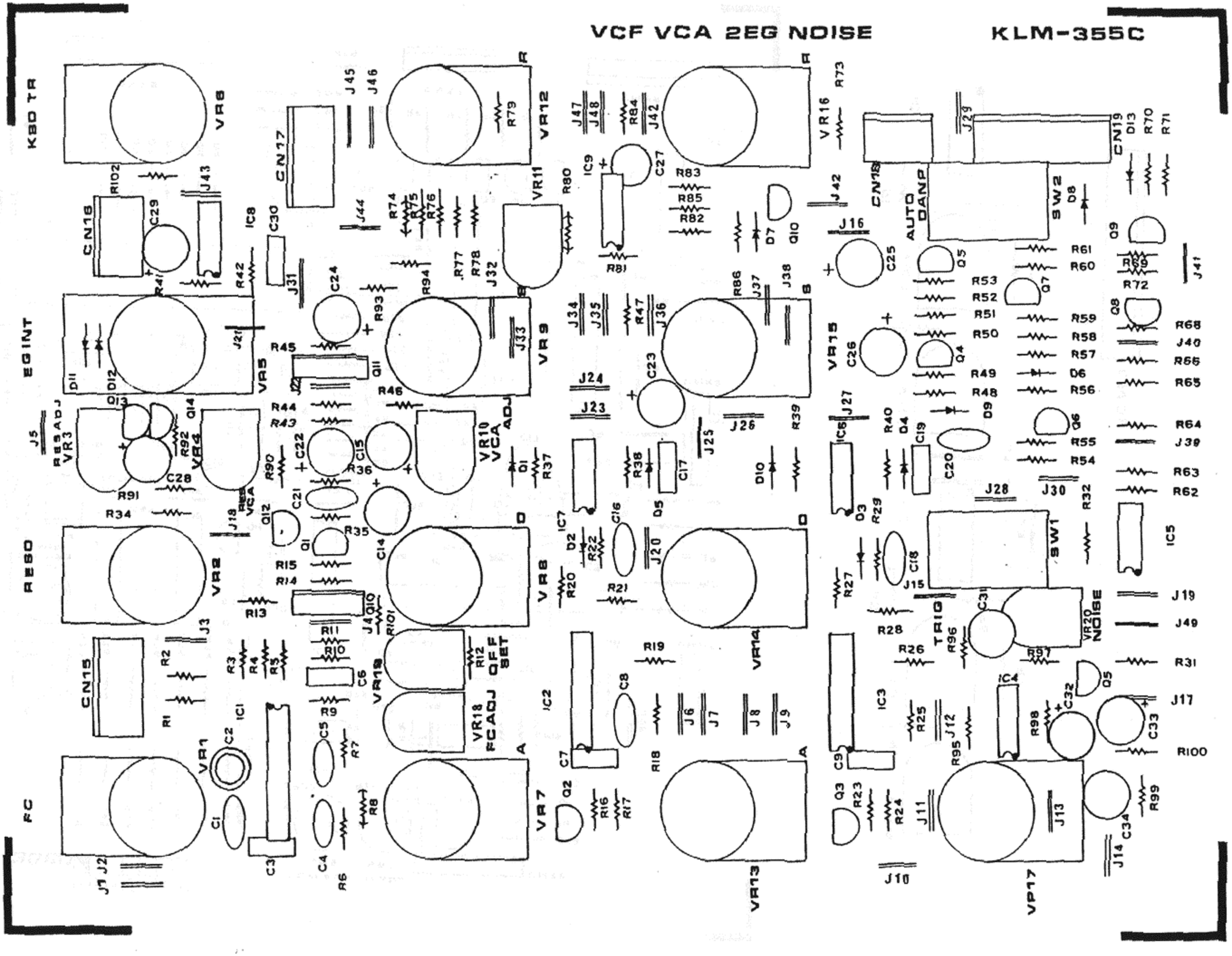

KLM-355 (OLD PRODUCTION)

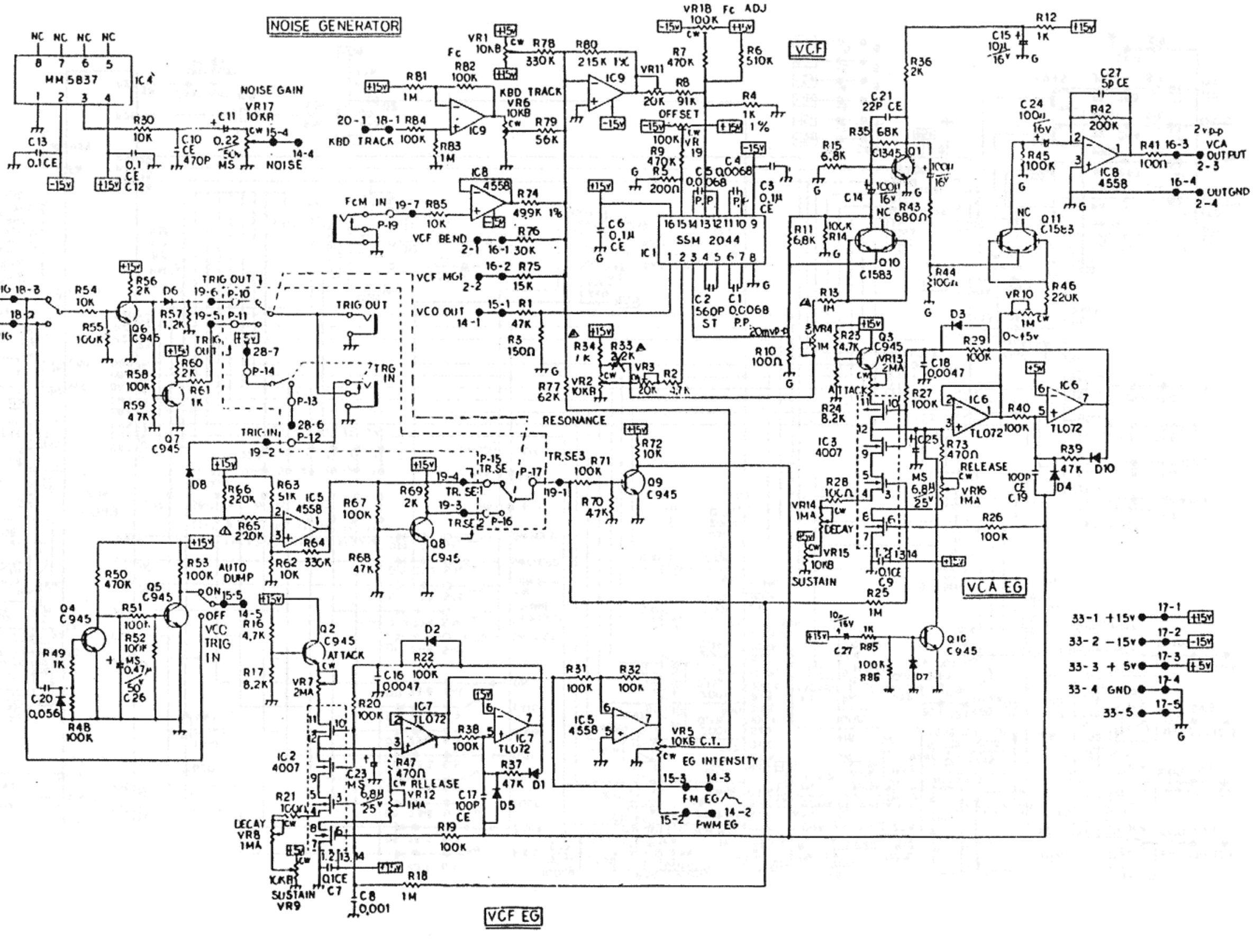

KLM-355 (NEW PRODUCTION)

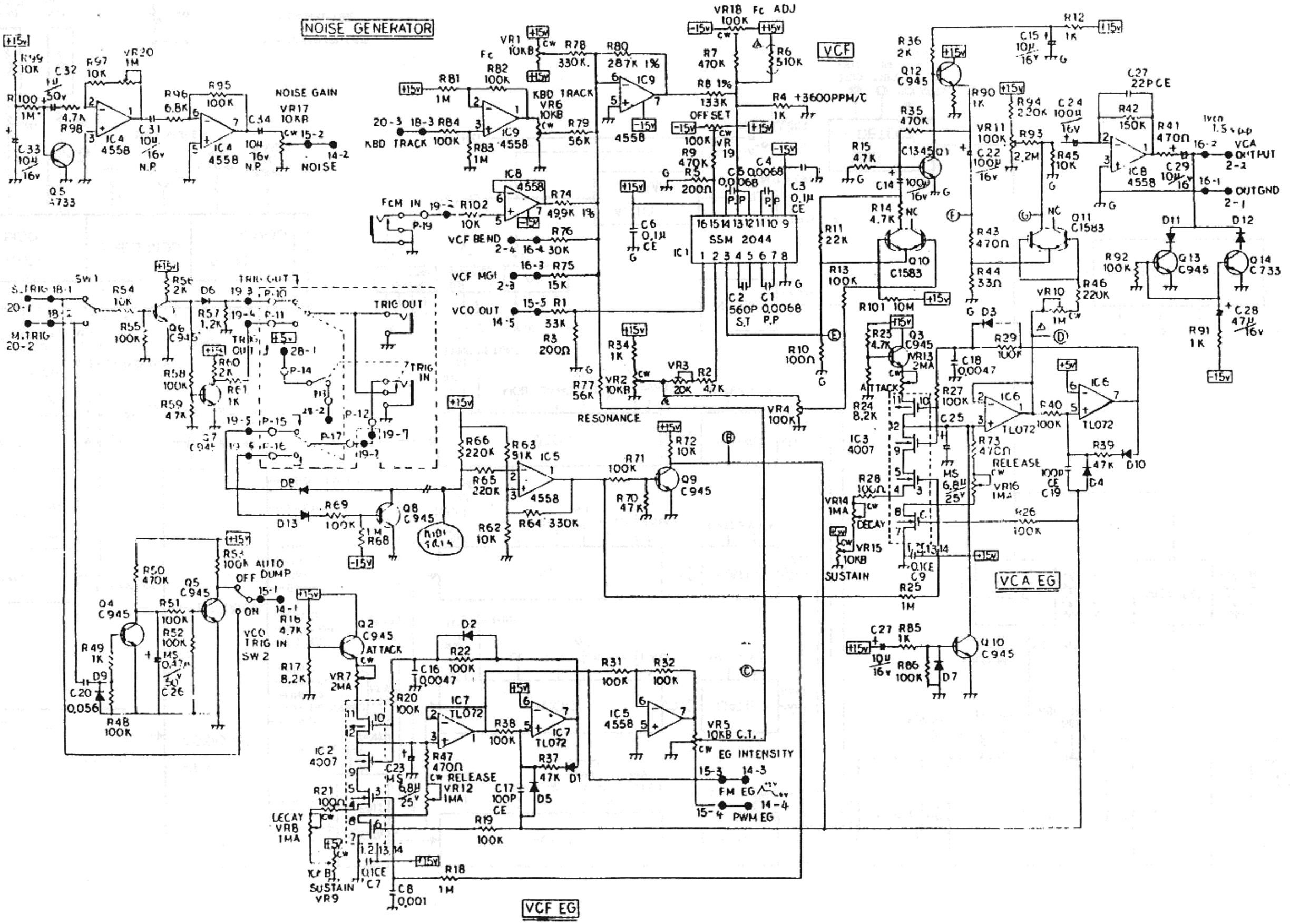

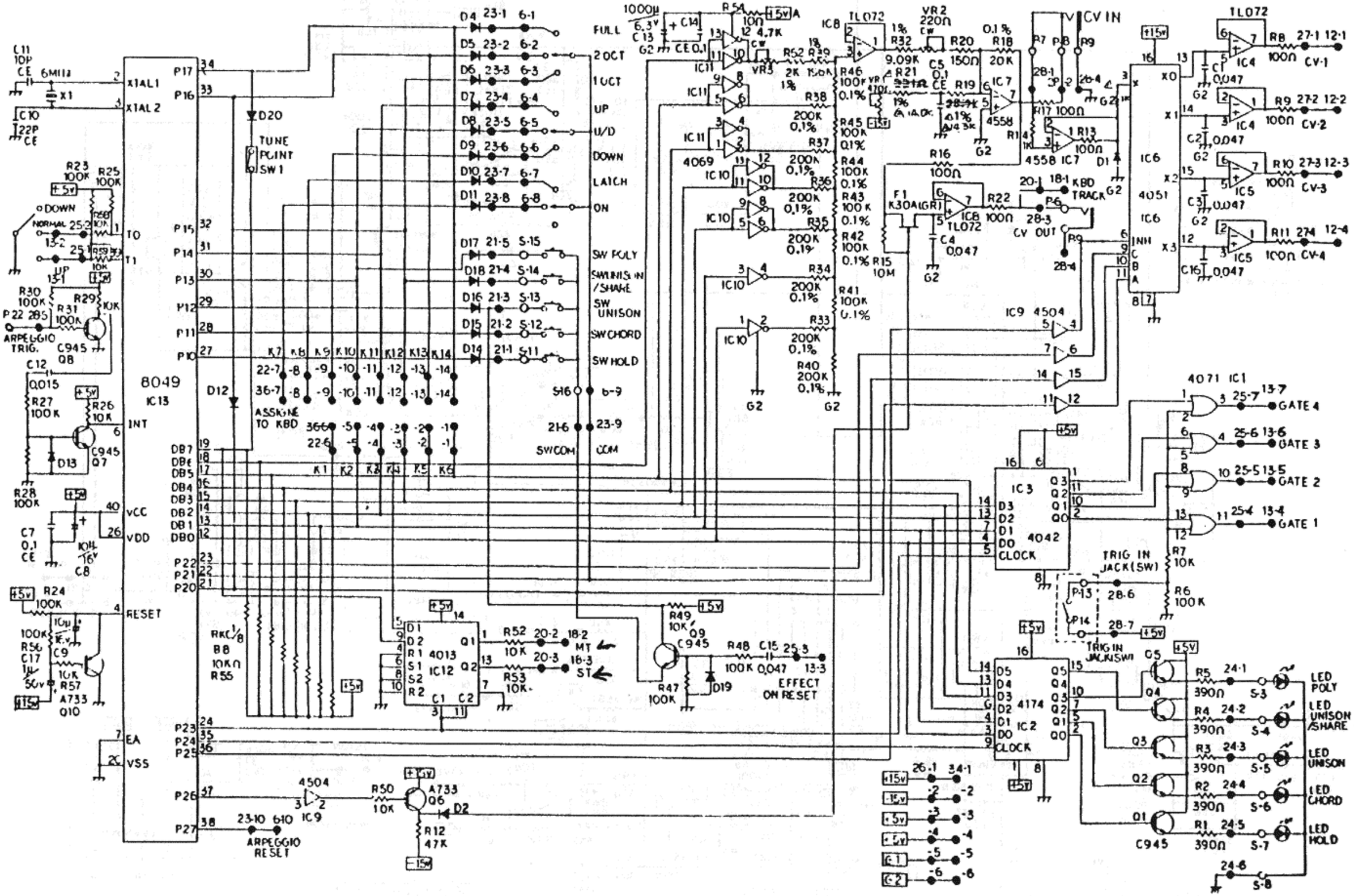
8049
IC13
XTAL1
XTAL2
INT
VCC
VDD
RESET
EA
VSS
TUNE POINT SW1
FULL
2 OCT
1 OCT
UP
U/D
DOWN
LATCH
ON
SW POLY
SW UNISON /SHARE
SW UNISON
SW CHORD
SW HOLD
SW COM
COM
ASSIGNE TO KBD
ARPEGGIO TRIG.
ARPEGGIO RESET
4013
IC12
4069
4558
4558 IC7
TL072
4051
IC6
4504
4071 IC1
4042
IC3
4174
IC2
CLOCK
CV IN
CV OUT
KBD TRACK
GATE 4
GATE 3
GATE 2
GATE 1
TRIG IN JACK(SW)
EFFECT ON RESET
LED POLY
LED UNISON /SHARE
LED UNISON
LED CHORD
LED HOLD

KLM-356

KLM-398

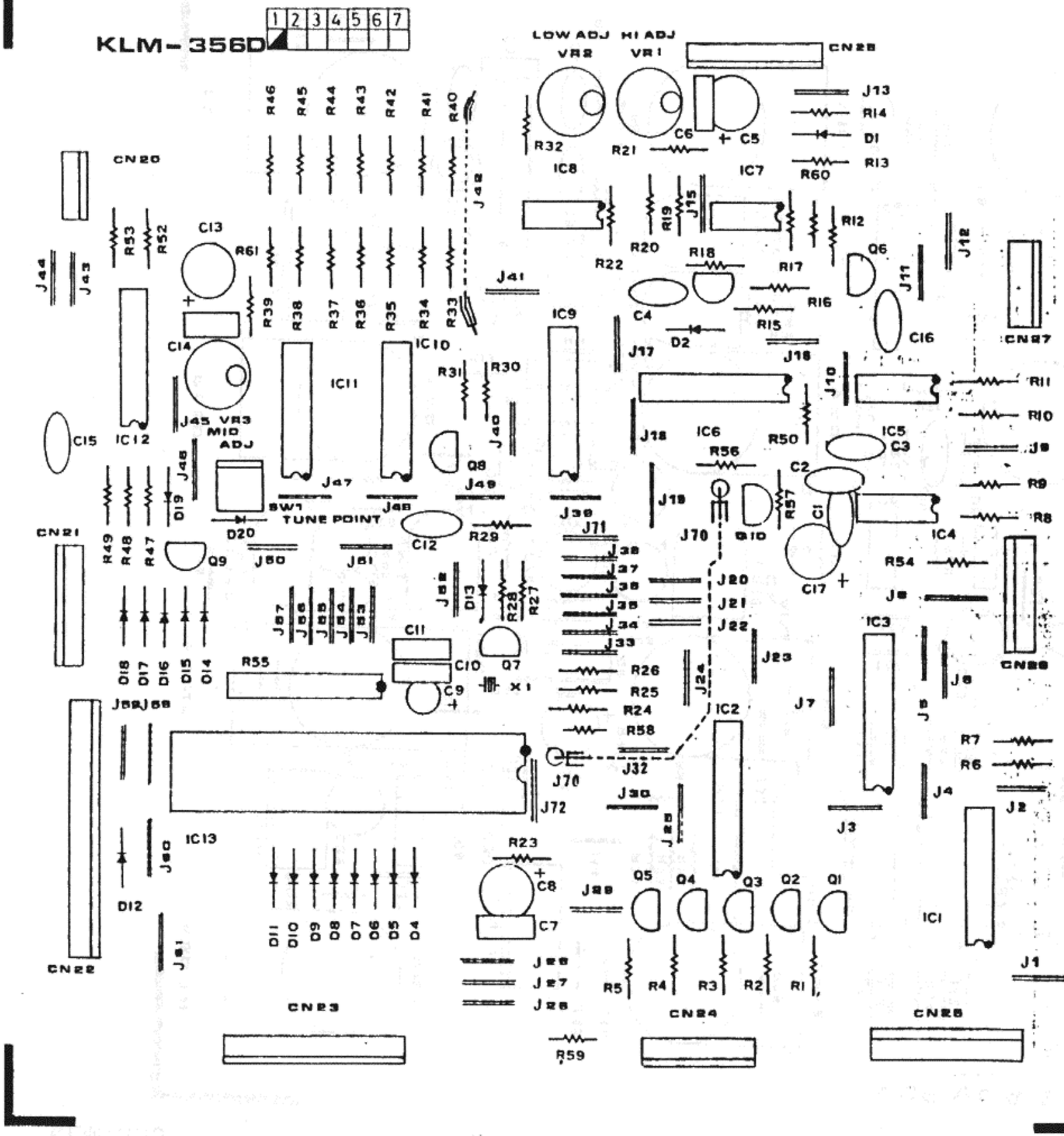

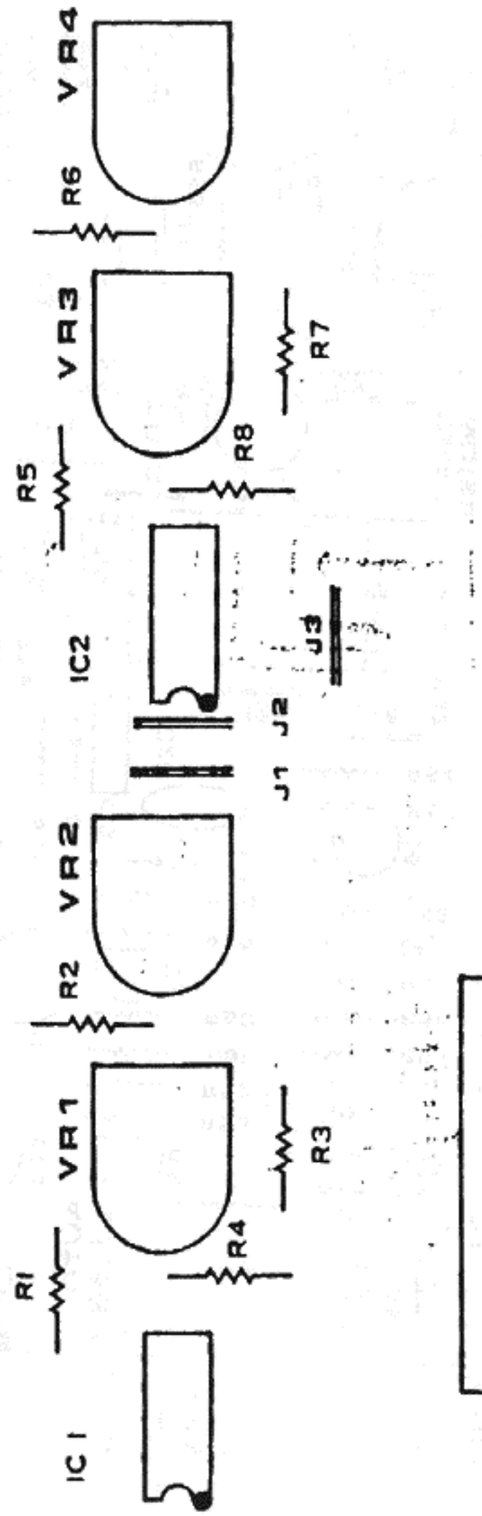

KLM-376-MP

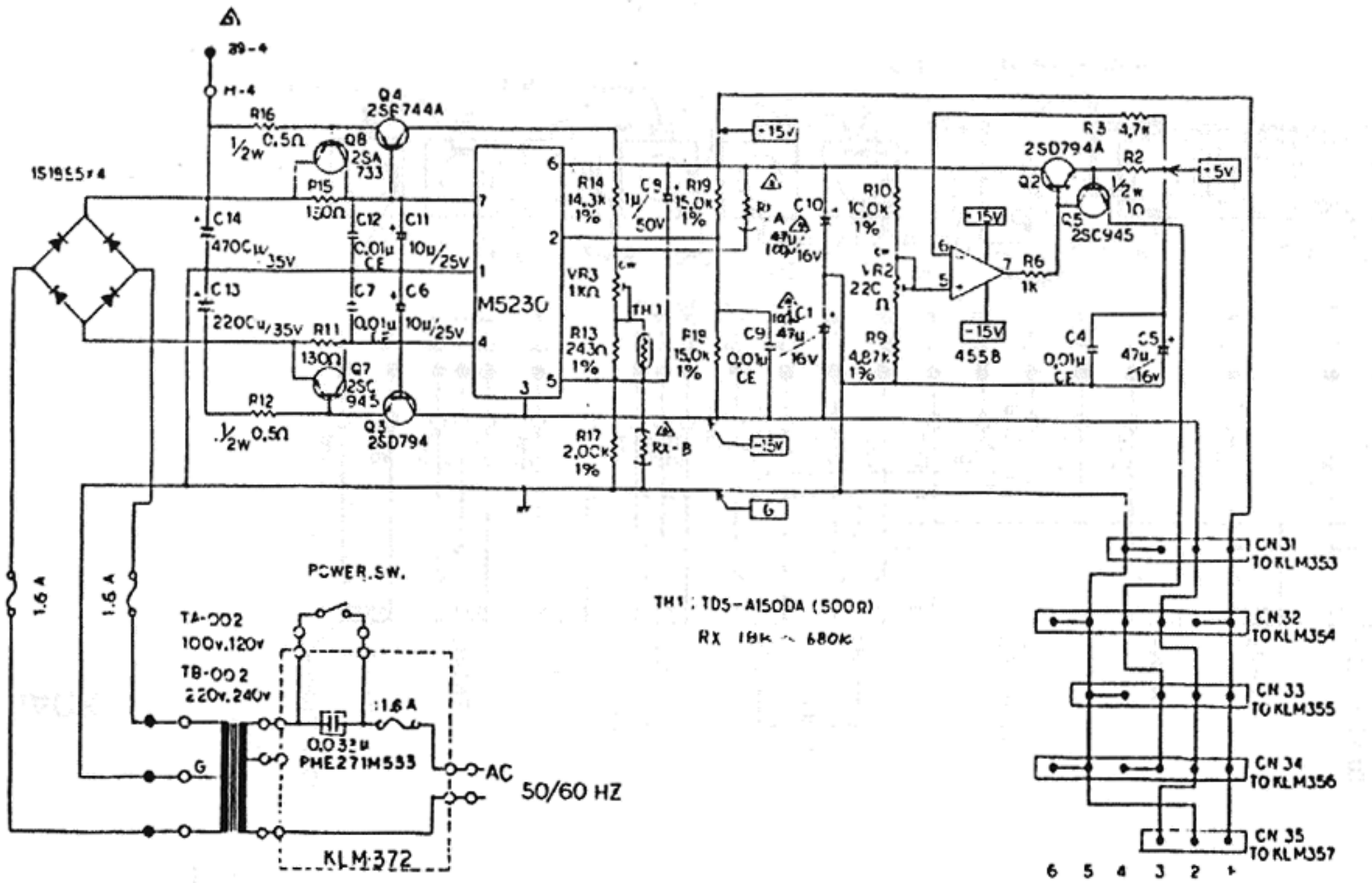

KLM-357

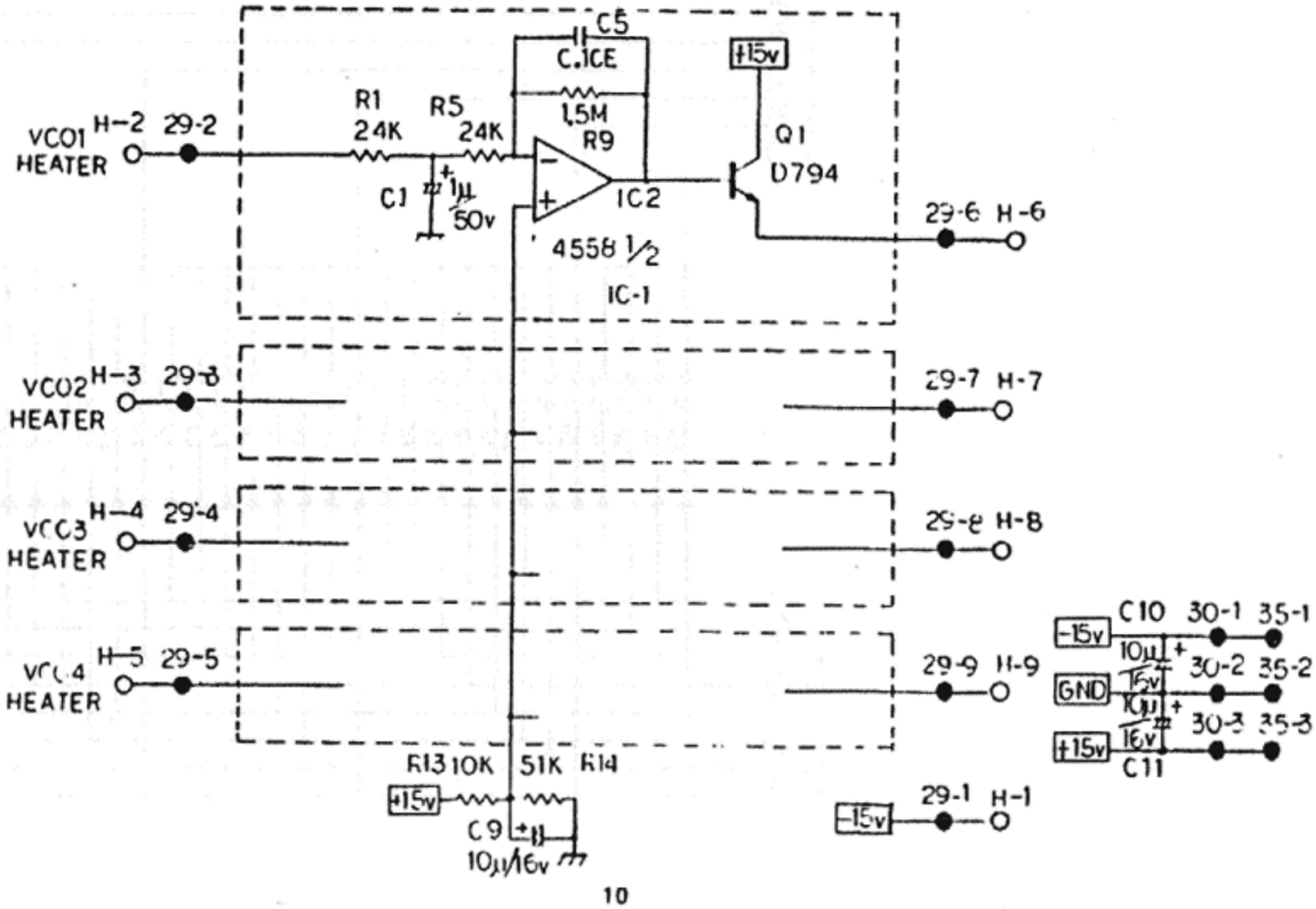

KLM-376-MP

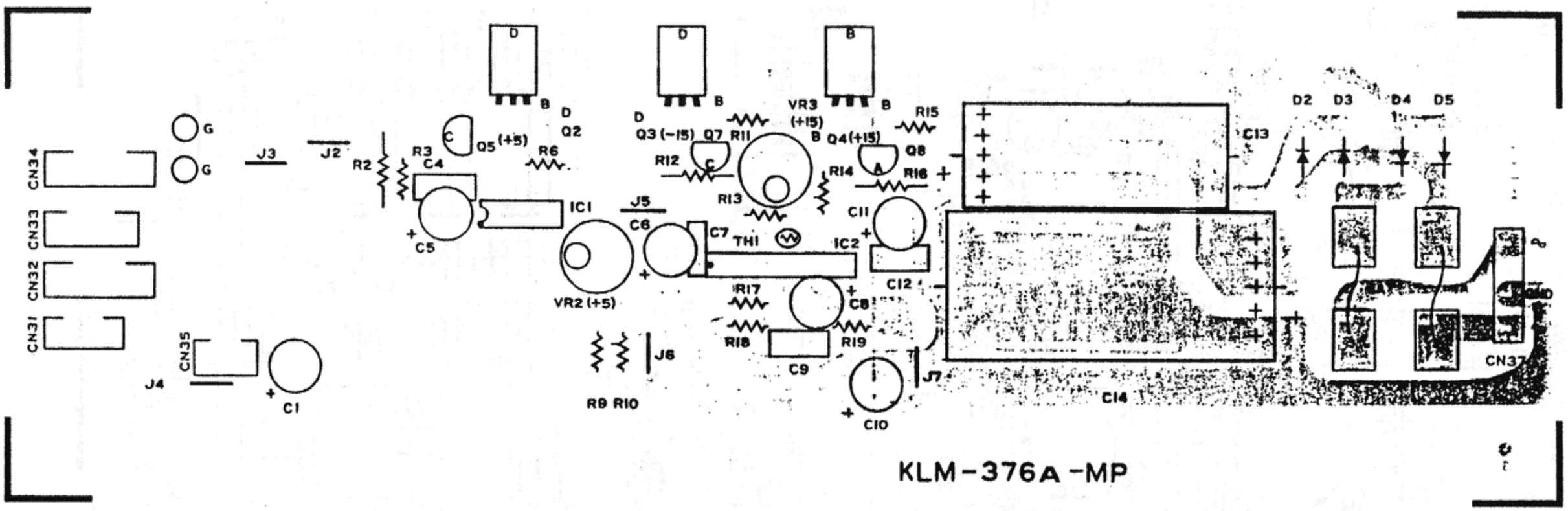

KLM-376A-MP

KLM-357

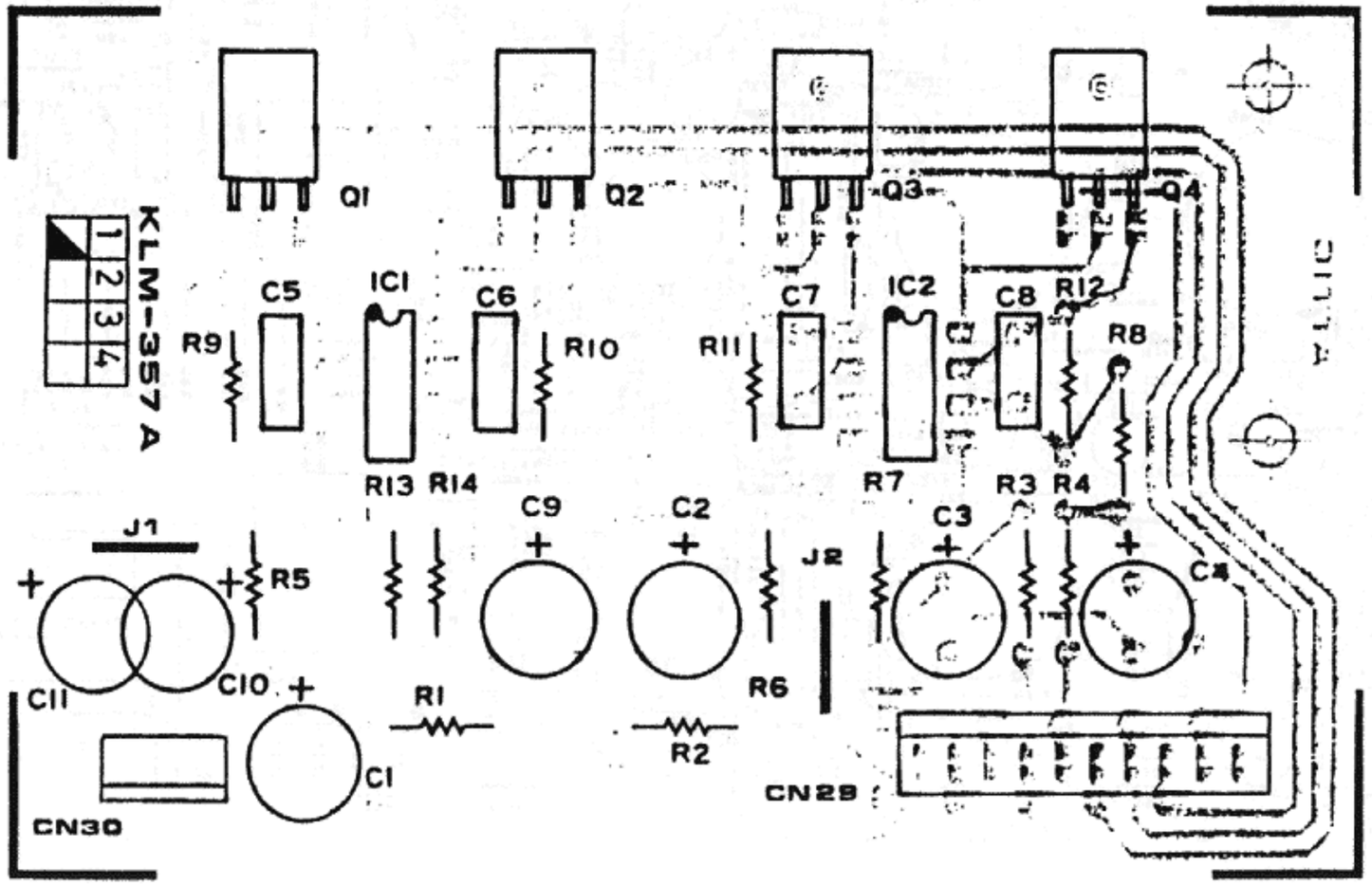

5. PC BOARD

KLM-353

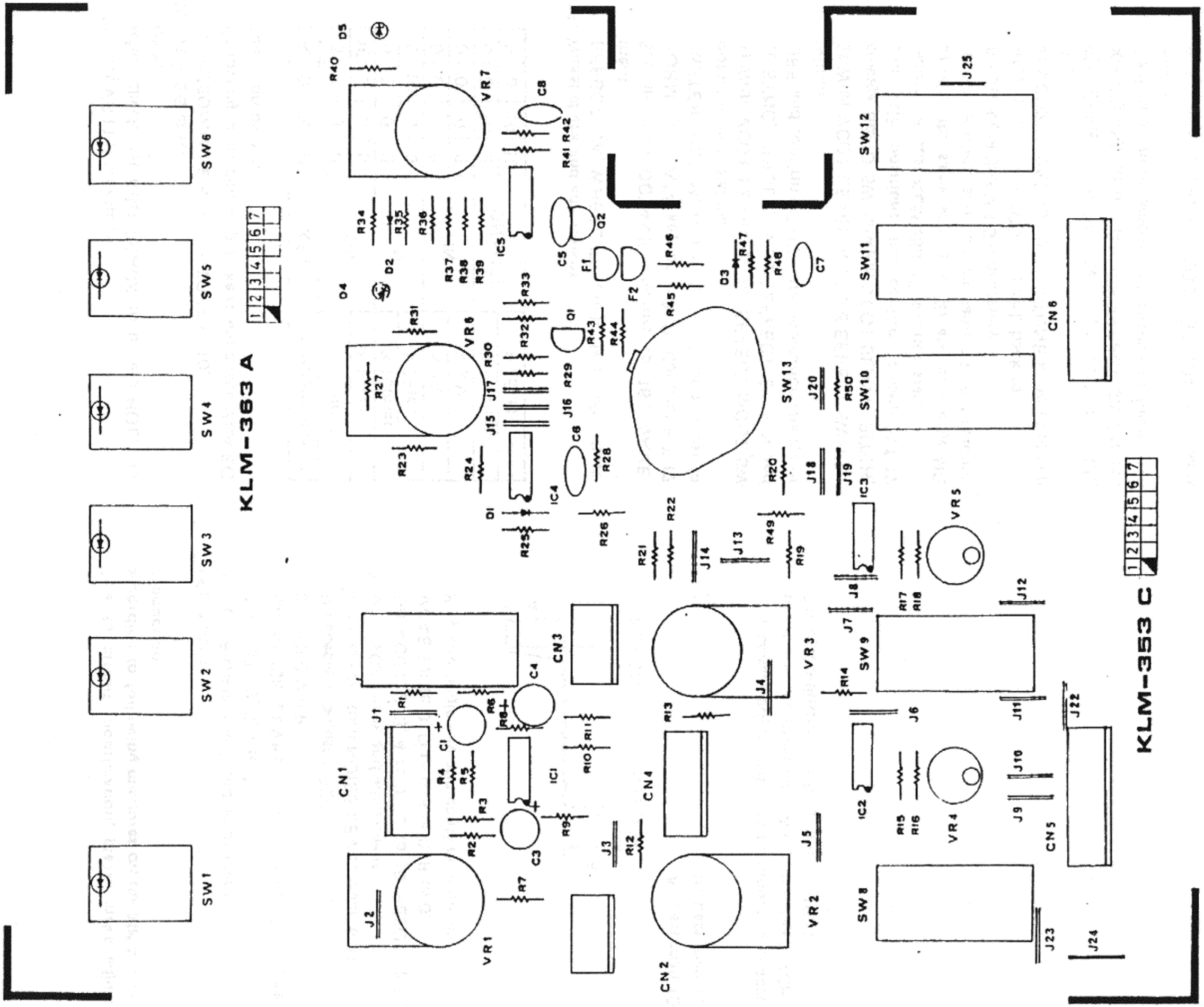

6. INTER CHANGE LIST OF CONNECTOR TERMINAL NUMBER

This list was made with the change of the connector. Please compare new number with old one reffering to the list.

RECEPTACLE OLD	RECEPTACLE NEW	CONNECTOR No	COLOR	P.C.B.	FUNCTION
1-1	1-6	5	BN	KLM-353	ARPEGGIO TRIG
1-2	1-5	"	RD	"	PHONE GND
1-3	1-4	"	OR	"	PHONE OUT-2
1-4	1-3	"	YE	"	PHONE OUT-1
1-5	1-2	"	GR	"	OUT GND
1-6	1-1	"	BU	"	SIGNAL OUT
2-1	2-4	3	RD	353	VCA OUT GND
2-2	2-3	"	"	"	VCA OUT
2-3	2-2	"	"	"	VCF (MG1)
2-4	2-1	"	"	"	VCF (BEND)
3-1	3-4	4	BL	353	GND
3-2	3-3	"	"	"	GND
3-3	3-2	"	BU	"	-15V
3-4	3-1	"	RD	"	+15V
4-1	4-6	1	BN	353	MG 1 (WHEEL)
4-2	4-5	"	RD	"	MG 1
4-3	4-4	"	OR	"	GND
4-4	4-3	"	YE	"	-15V
4-5	4-2	"	GR	"	BEND
4-6	4-1	"	BU	"	+15V
5-1	5-8	2	BN	353	ARP SW
5-2	5-7	"	"	"	VCO1/SLAVE OSC (BEND)
5-3	5-6	"	"	"	PITCH (BEND)
5-4	5-5	"	"	"	VCO1/SLAVE OSC (MG 1)
5-5	5-4	"	"	"	PITCH (MG1)
5-6	5-3	"	"	"	MG1 OUT
5-7	5-2	"	"	"	PWM (MG 2)
5-8	5-1	"	"	"	PWM (MG 1)
6-1	6-10	6	OR	353	ARP RESET
6-2	6-9	"	"	"	COM
6-3	6-8	"	"	"	ARP ON
6-4	6-7	"	"	"	LATCH
6-5	6-6	"	"	"	DOWN
6-6	6-5	"	"	"	UP/DOWN
6-7	6-4	"	"	"	UP
6-8	6-3	"	"	"	1 OCT
6-9	6-2	"	"	"	2 OCT
6-10	6-1	"	"	"	FULL
7-1	7-6	17	BL	354	GND
7-2	7-5	"	"	"	"
7-3	7-4	"	OR	"	+5V
7-4	7-3	"	BU	"	-15V
7-5	7-2	"	RD	"	+15V
7-6	7-1	"	RD	"	"
8-1	8-3	14	BN	354	PORTAGNO→P21
8-2	8-2	"	RD	"	PORTA→P20
8-3	8-1	"	OR	"	FMIN→P18
9-1	9-4	9	BN	354	EFFECT SW
9-2	9-3	"	RD	"	"
9-3	9-2	"	OR	"	EFFECT LED -
9-4	9-1	"	YE	"	" +
10-1	10-8	2	BN	354	ARP SW
10-2	10-7	"	"	"	VCO1/SLAVE OSC (BEND)
10-3	10-6	"	"	"	PITCH (BEND)
10-4	10-5	"	"	"	VCO1/SLAVE OSC (MG 1)
10-5	10-4	"	"	"	PITCH (MG1)
10-6	10-3	"	"	"	PWM MG1
10-7	10-2	"	"	"	PWM MG2
10-8	10-1	"	"	"	PWM MG1
12-1	12-4	16	PU	354	CV4
12-2	12-3	"	"	"	CV3
12-3	12-2	"	"	"	CV2
12-4	12-1	"	"	"	CV1
13-1	13-8	15	-	354	NC
13-2	13-7	"	BU	"	GATE 4
13-3	13-6	"	"	"	GATE 3
13-4	13-5	"	"	"	GATE 2
13-5	13-4	"	"	"	GATE 1
13-6	13-3	"	"	"	EFFECT ON
13-7	13-2	"	"	"	NORMAL
13-8	13-1	"	"	"	OCT UP
14-1	14-5	11	GR	354	VCO TRIG IN
14-2	14-4	"	"	"	NOISE
14-3	14-3	"	"	"	FM EG
14-4	14-2	"	"	"	PWM EG
14-5	14-1	"	"	"	VCO SIG OUT
15-1	15-5	11	GR	KLM-355	AUTO DAMP COM
15-2	15-4	"	"	"	NOISE
15-3	15-3	"	"	"	FM EG
15-4	15-2	"	"	"	PWM EG
15-5	15-1	"	"	"	VCO OUT
16-1	16-4	3	RD	355	VCA OUT GND
16-2	16-3	"	"	"	VCA OUT
16-3	16-2	"	"	"	VCF MG1
16-4	16-1	"	"	"	VCF BEND
17-1	17-5	13	BL	355	GND
17-2	17-4	"	"	"	"
17-3	17-3	"	OR	"	+5
17-4	17-2	"	BU	"	-5
17-5	17-1	"	RD	"	+15
18-1	18-3	10	YE	355	S. TRIG
18-2	18-2	"	"	"	M. TRIG
18-3	18-1	"	"	"	KBD TRACK
19-1	19-8	12	-	355	NC
19-2	19-7	"	RD	"	FCM IN
19-3	19-6	"	OR	"	TRIG OUT
19-4	19-5	"	YE	"	TRIG OUT
19-5	19-4	"	GR	"	TRIG IN
19-6	19-3	"	BU	"	TRIG IN
19-7	19-2	"	PU	"	TRIG IN (From JACK)
19-8	19-1	"	GY	"	TRIG IN (to JACK)
20-1	20-3	10	YE	356	ST
20-2	20-2	"	"	"	MT
20-3	20-1	"	"	"	KBD TRACK
21-1	21-6	7	BN	356	SW COM
21-2	21-5	"	RD	"	SW POLY
21-3	21-4	"	OR	"	SW U/S
21-4	21-3	"	YE	"	SW UNISON
21-5	21-2	"	GR	"	SW CHORD
21-6	21-1	"	BU	"	SW HOLD
22-1	22-14	20		356	K14
22-2	22-13	"		"	"13
22-3	22-12	"		"	"12
22-4	22-11	"		"	"11
22-5	22-10	"		"	"10
22-6	22-9	"		"	"9
22-7	22-8	"		"	"8
22-8	22-7	"		"	"7
22-9	22-6	"		"	"1
22-10	22-5	"		"	"2
22-11	22-4	"		"	"3
22-12	22-3	"		"	"4
22-13	22-2	"		"	"5
22-14	22-1	"		"	"6
23-1	23-10	6	OR	356	ARP RESET
23-2	23-9	"	"	"	COM
23-3	23-8	"	"	"	ARP ON
23-4	23-7	"	"	"	LATCH
23-5	23-6	"	"	"	DOWN
23-6	23-5	"	"	"	UP/DOWN
23-7	23-4	"	"	"	UP
23-8	23-3	"	"	"	1 OCT
23-9	23-2	"	"	"	2 OCT
23-10	23-1	"	"	"	FULL
24-1	24-6	8	PU	356	GND
24-2	24-5	"	GY	"	LED HOLD
24-3	24-4	"	WY	"	LED CHORD
24-4	24-3	"	BL	"	LED UNISON
24-5	24-2	"	PK	"	LED U/S
24-6	24-1	"	LB	"	LED POLY
25-1	25-8	15	-	356	NC
25-2	25-7	"	BU	"	GATE 4
25-3	25-6	"	"	"	GATE 3
25-4	25-5	"	"	"	GATE 2
25-5	25-4	"	"	"	GATE 1
25-6	25-3	"	"	"	EFFECT ON RESET
25-7	25-2	"	"	"	NOR
25-8	25-1	"	"	"	UP
26-1	26-6	19	BL	356	G2
26-2	26-5	"	"	"	G1
26-3	26-4	"	OR	"	+5
26-4	26-3	"	"	"	+5
26-5	26-2	"	BU	"	-15
26-6	26-1	"	"	"	+15
27-1	27-4	16	PU	KLM-356	CV 4
27-2	27-3	"	"	"	CV 3
27-3	27-2	"	"	"	CV 2
27-4	27-1	"	"	"	CV 1
28-1	28-7	18	BN	356	TRIG IN JACK →P14
28-2	28-6	"	RD	"	TRIG IN JACK →P13
28-3	28-5	"	OR	"	ARP TRIG IN → P22
28-4	28-4	"	YE	"	CV IN GND→P9
28-5	28-3	"	GR	"	CV OUT→P6
28-6	28-2	"	BU	"	CV IN (SW) →P8
28-7	28-1	"	PU	"	CV IN→P7
29-1	29-10	21	-	357	NC
29-2	29-9	"	RD	"	VCO 4
29-3	29-8	"	OR	"	" 3 HEATER
29-4	29-7	"	YE	"	" 2 CONTROL
29-5	29-6	"	GR	"	" 1
29-6	29-5	"	BU	"	VCO 4
29-7	29-4	"	PU	"	" 3 TEMP
29-8	29-3	"	GY	"	" 2 CHECK
29-9	29-2	"	WT	"	" 1
29-10	29-1	"	BL	"	HEATER-COM
30-1	30-3	22	BU	357	-15V
30-2	30-2	"	BL	"	GND
30-3	30-1	"	RD	"	+15V
31-1	31-4	4	BL	376	GND
31-2	31-3	"	"	"	"
31-3	31-2	"	BU	"	-15V
31-4	31-1	"	RD	"	+15V
32-1	33-5	13	BL	376	GND
32-2	33-4	"	"	"	"
32-3	33-3	"	OR	"	+5V
32-4	33-2	"	BU	"	-15V
32-5	33-1	"	RD	"	+15V
32-1	32-6	17	BL	376	GND
32-2	32-5	"	"	"	"
32-3	32-4	"	OR	"	+5V
32-4	32-3	"	BU	"	BU
32-5	32-2	"	RD	"	RD
32-6	32-1	"	"	"	RD
34-1	34-6	19	BL	376	GND
34-2	34-5	"	"	"	"
34-3	34-4	"	OR	"	+5V
34-4	34-3	"	"	"	"
34-5	34-2	"	BU	"	-15V
34-6	34-1	"	RD	"	+15V
35-1	35-3	22	BU	376	-15V
35-2	35-2	"	BL	"	GND
35-3	35-1	"	RD	"	+15V
39-1	39-11	23	RD	398	+15V
39-2	39-10	"	BL	"	GND
39-3	39-9	"	BU	"	-15V
39-4	39-8	"	YE	"	VCO4 AMP IN
39-5	39-7	"	GR	"	" " OUT
39-6	39-6	"	BU	"	VCO3 " IN
39-7	39-5	"	PU	"	" " OUT
39-8	39-4	"	GY	"	VCO2 " IN
39-9	39-3	"	WT	"	" " OUT
39-10	39-2	"	BL	"	VCO1 " IN
39-11	39-1	"	PK	"	" " OUT
1	1	20		KBD	K6
2	2	"		"	K5
3	3	"		"	K4
4	4	"		"	K3
5	5	"		"	K2
6	6	"		"	K1
7	7	"		"	K7
8	8	"		"	K8
9	9	"		"	K9
10	10	"		"	K10
11	11	"		"	K11
12	12	"		"	K12
13	13	"		"	K13
14	14	"		"	K14
P1	P1	5	BU	JACK	OUT PUT
P2	P2	"	GR	"	" GND
P3	P3	"	YE	"	PHONE 1
P4	P4	"	OR	"	" 2
P5	P5	"	RD	"	" GND
P6	P6	18	GR	JACK	CV OUT
P7	P7	"	PU	"	" IN
P8	P8	"	BU	"	" IN
P9	P9	"	YE	"	" GND
P10	P10	12	OR	SW	TRIG OUT
P11	P11	"	YE	"	TRIG OUT
P12	P12	"	PU	JACK	TRIG IN
P13	P13	18	RD	"	TRIG IN (SW)
P14	P14	"	BN	"	" " (")
P15	P15	12	GR	SW	POR SW
P16	P16	"	BU	"	" "
P17	P17	"	GY	"	" COM
P18	P18	14	OR	JACK	FM IN
P19	P19	12	RD	"	FcM IN
P20	P20	14	RD	"	PORTA
P21	P21	"	BN	"	" GND
P22	P22	18	OR	"	ARP TRIG IN
P23	P23	5	BN	"	" TRIG (J)
H1	H1	21		KLM-354	HEATER-COM
H2	H2	"		"	VCO1
H3	H3	"		"	VCO2 TEP
H4	H4	"		"	VCO3 CHECK
H5	H5	"		"	VCO4
H6	H6	"		"	VCO1
H7	H7	"		"	VCO2 HEATER
H8	H8	"		"	VCO3 CONTROL
H9	H9	"		"	VCO4
S1	S1	9		TACT SW	EFFECT LED +
S2	S2	"		"	" LED -
S3	S3	8		"	LED HOLD
S4	S4	"		"	" CHORD
S5	S5	"		"	" UNISON
S6	S6	"		"	"
S7	S7	"		"	" POLY
S8	S8	"		"	" COM
S9	S9	9		"	EFFECT SW
S10	S10	"		"	" "
S11	S11	7		"	SW HOLD
S12	S12	"		"	" CHORD
S13	S13	"		"	" UNISON
S14	S14	"		"	" UNISON/SHARE
S15	S15	"		"	" POLY
S16	S16	"		"	" COM
A1	A1	23		354	VCO1 AMP OUT
A2	A2	"		"	" " IN
A3	A3	"		"	VCO2 " OUT
A4	A4	"		"	" " IN
A5	A5	"		"	VCO3 " OUT
A6	A6	"		"	" " IN
A7	A7	"		"	VCO4 " OUT
A8	A8	"		"	" " IN
A9	A9	"		"	-15V
A10	A10	"		"	GND
A11	A11	"		"	+15V

NOTE

BROWN →	BN	PURPLE →	PU
RED →	RD	GRAY →	GY
ORANGE →	OR	WHITE →	WT
YELLOW →	YE	BLACK →	BL
GREEN →	GR	PINK →	PK
BLUE →	BU	LIGHT BLUE →	LB

KEYBOARD

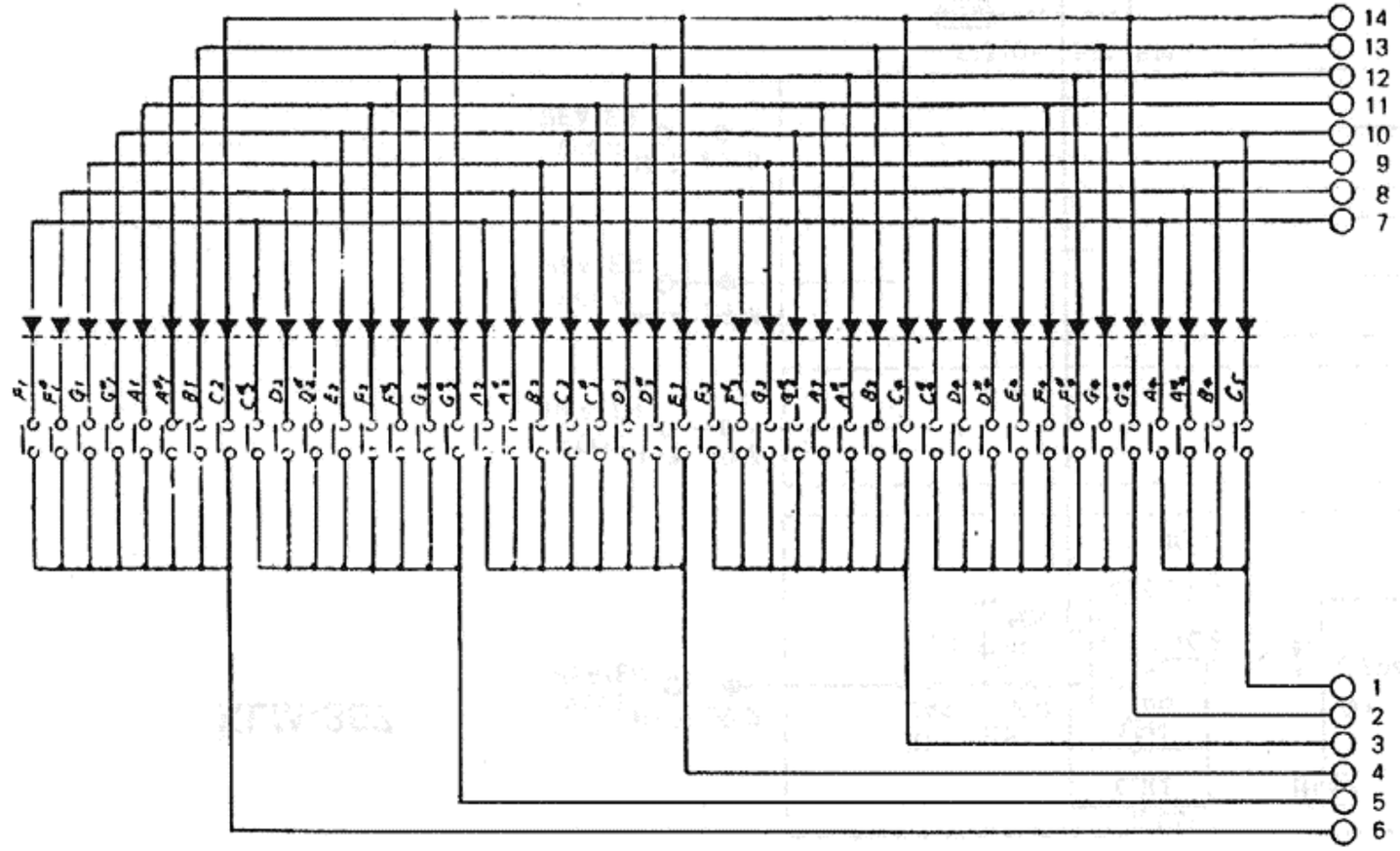

JACK

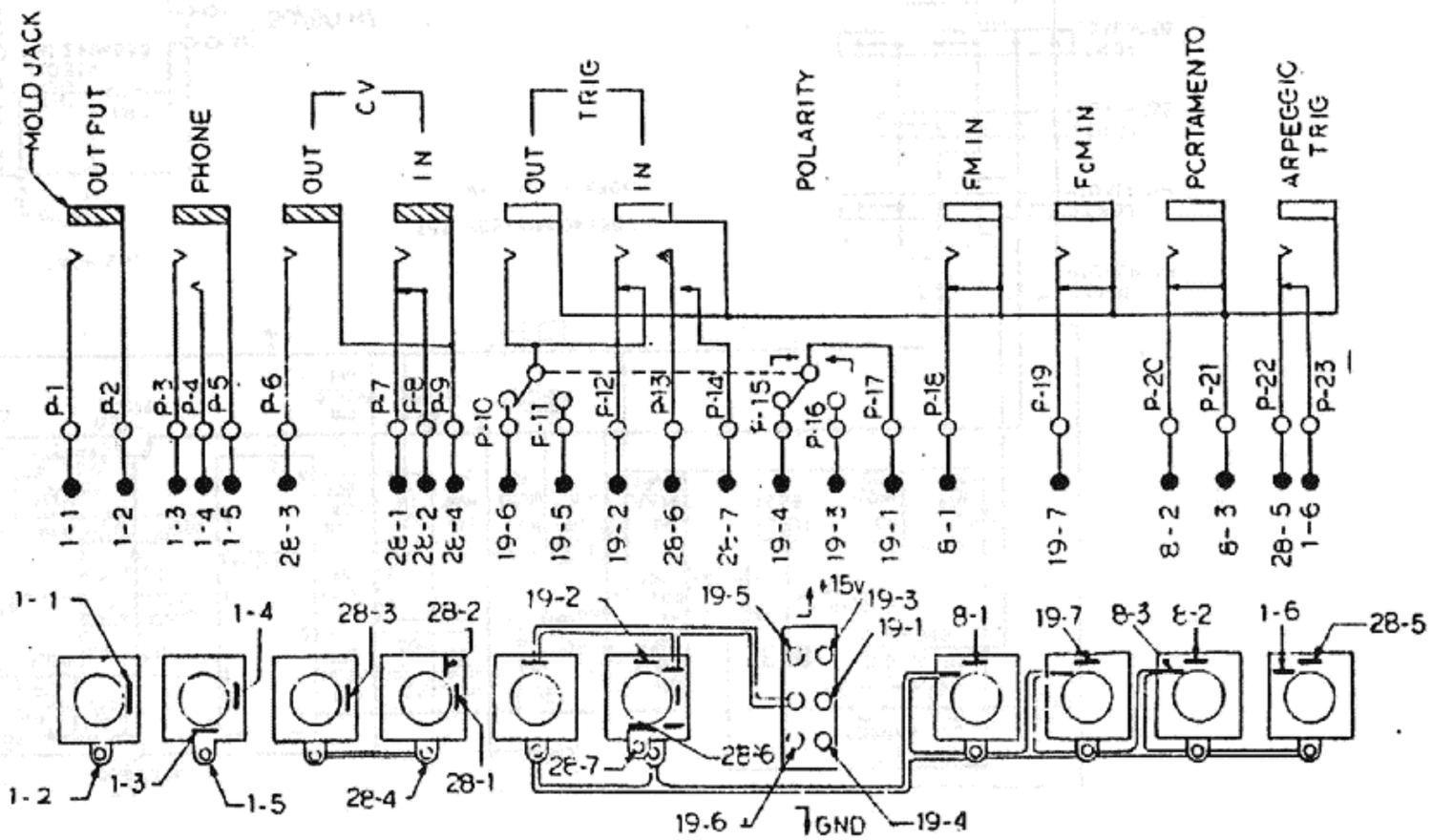

7. SEMI-FIXED RESISTORS DIAGRAM

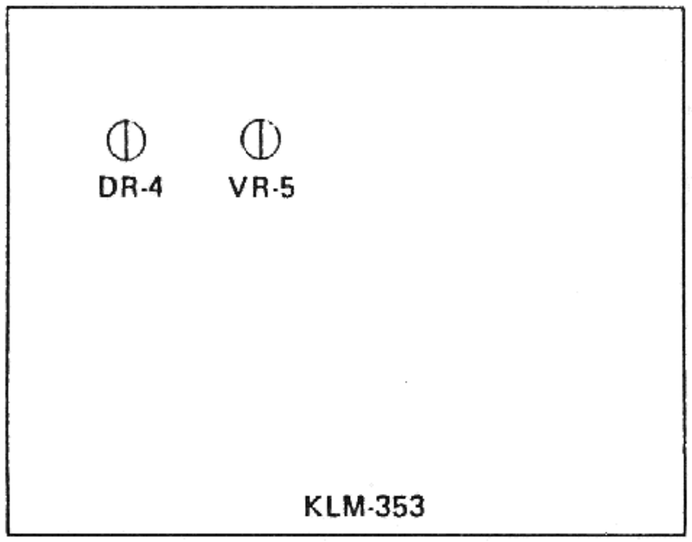

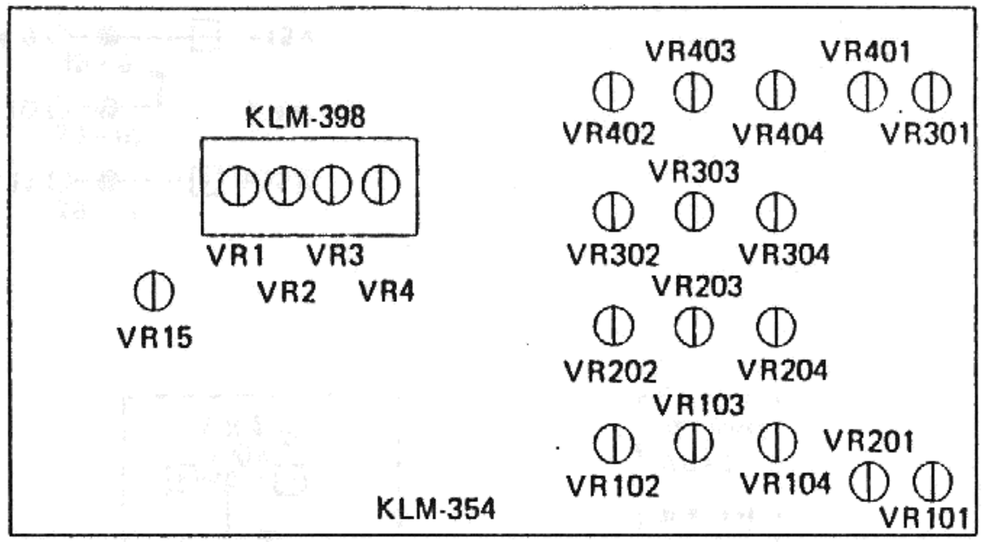

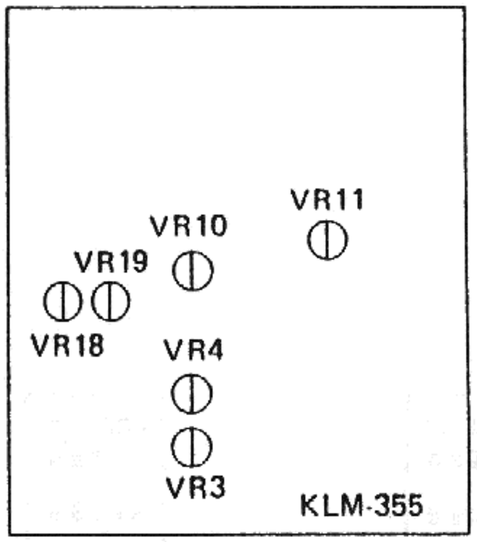



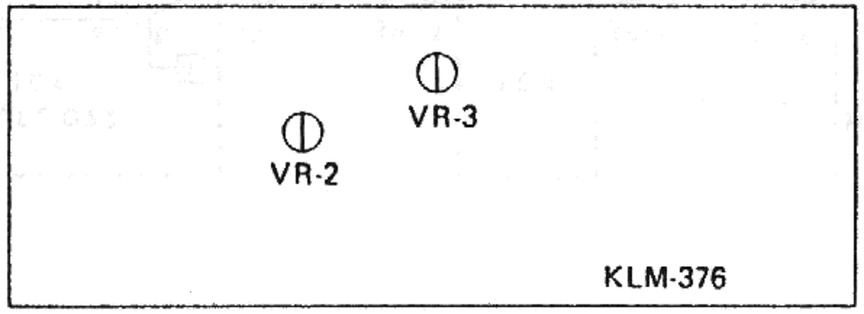

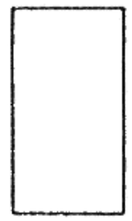

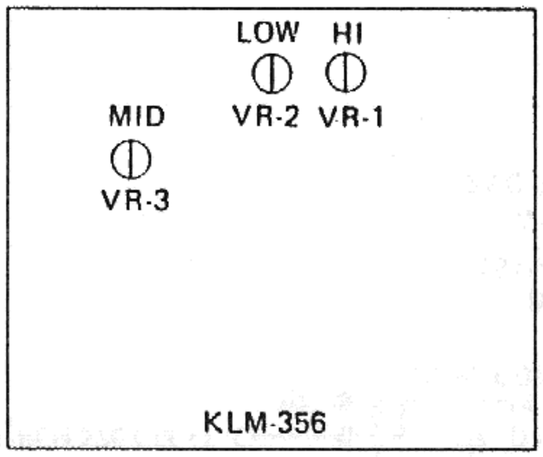

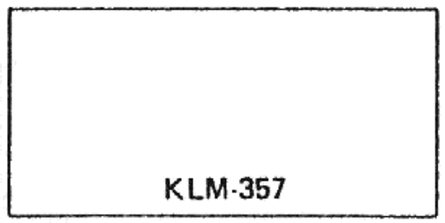

8. ADJUSTMENT PROCEDURE

Caution: **This unit has been precisely adjusted at the factory before shipment. Therefore, absolutely do not turn any variable resistors other than those required for servicing. Furthermore, please allow thirty minutes of warm-up time after turning on the power before beginning check or adjustment. Please refer to the separate VR location chart.**

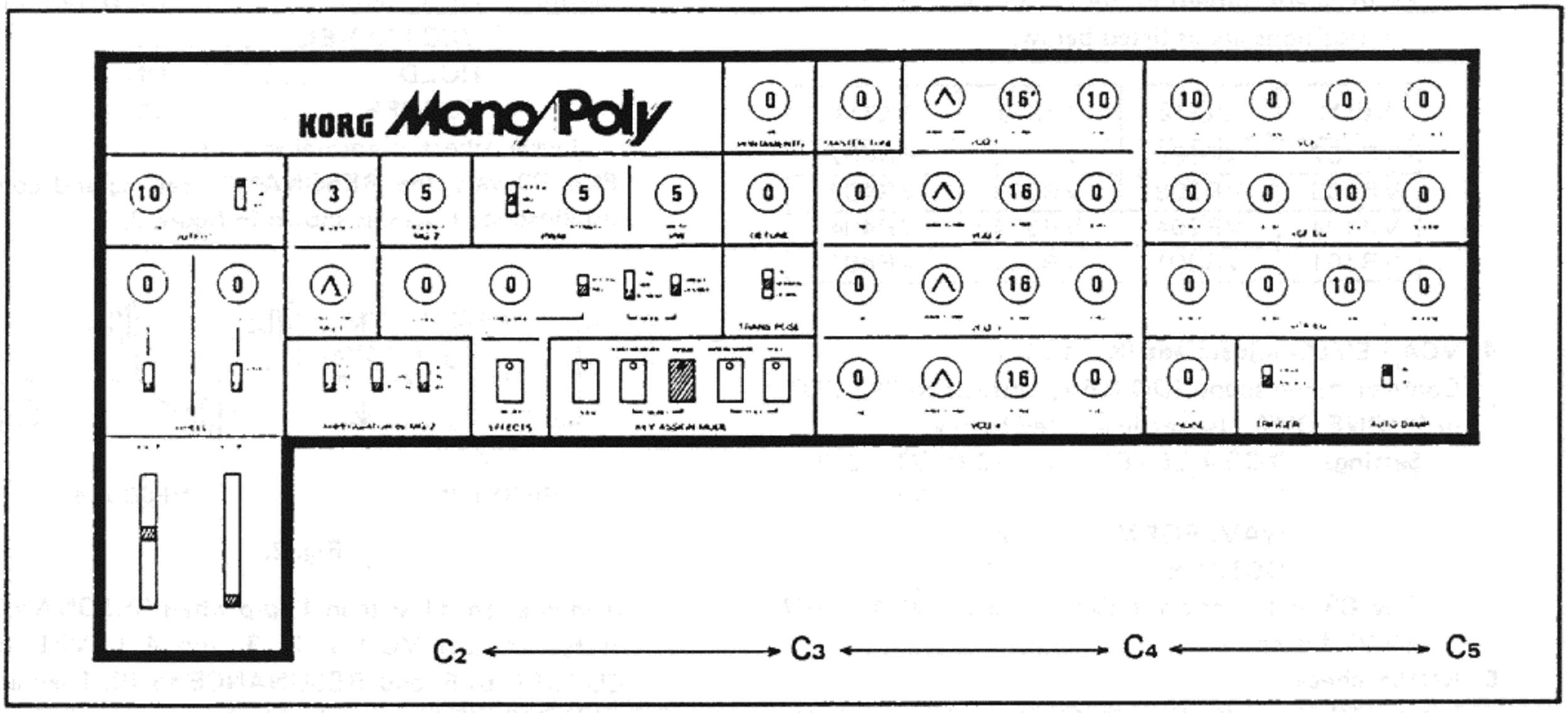

Normal setting

1. POWER SUPPLY adjustment (KLM-376).

Connect DVM to KLM-356; GND is J12.

1) −15V: Check J11 with DVM and confirm −15V (±0.01V).
   Adjust KLM-376 VR-3 if necessary.
2) +15V: Check J40 with DVM and confirm +15V (±0.5V).
3) +5V: Check left side of R54 (J39) with DVM and confirm +5V (±0.02V). Adjust KLM-376 VR-2 if necessary.

2. KEY ASSIGNER adjustment (KLM-356).

1) Assigner slope.
   CV1 output: Short the TUNE POINT; connect DVM to right side of KLM-356 R8 (GND is J12); change TRANSPOSE SW position in the order UP → DOWN → NORMAL and adjust to obtain the values shown in the chart.

TRANSPOSE	VR	CV1
UP	HI ADJ VR-1	+10.583 ±1mV
DOWN	LOW ADJ VR-2	+0.000 ±1mV
NORMAL	MID ADJ VR-3	+5.250 ±1mV

2) Open the TUNE POINT and confirm keyboard CV as shown.

KEY	TRANSPOSE	CV	
C2	DOWN	1.000V	Absolute value ±10mV
C2	NORMAL	2.000V	Slope ±2mV/Oct.
C3	NORMAL	3.000V	
C4	NORMAL	4.000V	
C5	NORMAL	5.000V	

3. PITCH adjustment (stretch tuning) (KLM-354).

1) OFFSET adjustment.
   Check KLM-398 lead wire connection points with DVM and confirm that each VCO offset voltage is ±0.1mV. Adjust the KLM-398 VR if necessary..
   Color code:
   VCO 1 → Red
   VCO 2 → Yellow
   VCO 3 → Blue
   VCO 4 → Gray
2) VCO-1 adjustment.
   Settings:
   VCO1 LEVEL 10
   VCO2~4 LEVEL 0
   MASTER TUNE . . . . . center
   TRANSPOSE . . . . . NORMAL
   DETUNE 0
   WHEEL BEND, MG VCF

   Connect properly calibrated WT-12 to SIG OUT or PHONE OUT and adjust as follows. Set WT-12 to METER function and set chromatic dial to $A^{\#}$.

WT-12 OCTAVE	VCO-1 OCTAVE	KEY	Meter Indication (cents)	VR
M(L)	16′	$A^{\#}_4$	0	VR102
LL	16′	$A^{\#}_1$	−7 (−5~−10)	VR103
M(L)	2′	$A^{\#}_1$	0	VR101
HH	2′	$A^{\#}_4$	+7 (+5~+10)	VR104

The 2′ $A^{\#}_3$ and $A^{\#}_4$ pitch indications should ideally be +4 cent and +7 cent, respectively.

3) VCO-2, 3, 4 adjustment.
Perform adjustment in the same way as for VCO-1.
VR positions are as listed below.

VCO1	VCO2	VCO3	VCO4
VR102	VR202	VR302	VR402
VR103	VR203	VR303	VR403
VR104	VR204	VR304	VR404
VR101	VR201	VR301	VR401

4. VCA LEVEL adjustment (KLM-355).
Connect oscilloscope (DC 0.5V, 1msec.) to SIG OUT or PHONE OUT. Use settings listed below.

Settings: VCO-4 LEVEL . . . 10 (VCO1, 2, 3 are at 0.)
WAVEFORM . . . . Λ
OCTAVE . . . . . 16'

Play C3 and confirm 1.5Vp-p. Adjust VCA GAIN VR10 if necessary.

5. NOISE check.
Set CUTOFF to 10, RESONANCE to 0, and VCO1, 2, 3, 4 to 0.
Set NOISE LEVEL at 10 and confirm 3.0~5.0Vp-p.
After check, turn NOISE LEVEL back to 0.

6. VCF check and adjustment.
1) OFFSET adjustment.
Set RESONANCE to 0, CUTOFF to 5.
Use DVM to check both sides of R10. Adjust VR-19 to obtain 0.000V ±10mV.
2) VCF LEVEL, Fc adjustment
Set VCO4 to 0, RESONANCE to 10, EG INT to 0, CUTOFF to 10.
Use oscilloscope at DC2V, 0.1msec.
Put any single key into HOLD. Confirm cycle T = 140μsec. and oscillation level is within 7Vp-p – 11Vp-p (figure 1).

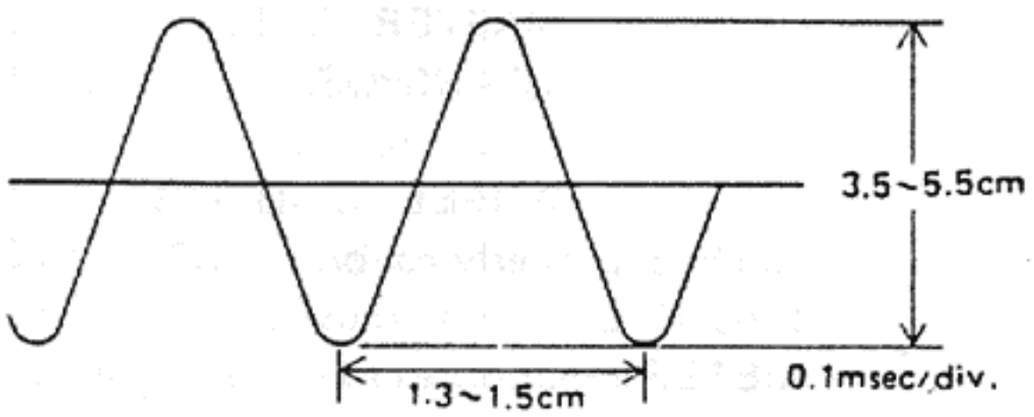

Fig. 1.

If necessary, adjust VR18 for Fc. If oscillation level is off, adjust VR3 to obtain 20Vp-p at both sides of KLM-355 R10 (with CUTOFF at 10 and RESO at 10).
Confirm that oscillation begins when RESONANCE is turned up to 7 or above.

7. RESONANCE VCA check and adjustment.
Settings: Oscilloscope . . . . . DC 0.5V, 1msec.
VCO1 LEVEL 10
HOLD . . . . . ON
CUTOFF 10
Leave others at normal setting.
Play C3 vary the RESONANCE setting and confirm oscilloscope traces as show figure 2.

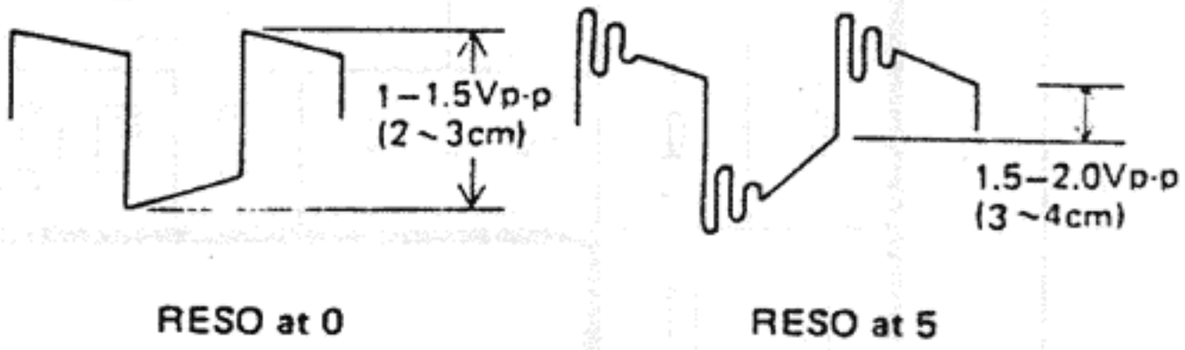

Fig. 2.

If indication is less than 1Vp-p when RESONANCE is at 5, then set VCO 1, 2, 3, and 4 LEVEL to 0, CUTOFF to 5, and RESONANCE to 10. Then adjust KLM-355 VR4 to obtain 60mVp-p across both sides of KLM-355 R44.

8. VCF EG check.
Set oscilloscope to DC 2V, 1msec, VCO LEVEL to 10, HOLD to OFF, VCA EG A to 0, D to 0, S to 10, and R to 10. Then confirm changes in oscillation frequency as listed below.

CUTOFF	RES	EG INT	A	D	S	R
10	10	-5	3	3	2	3
0	10	+5	3	3	2	3

Oscilloscope waveform

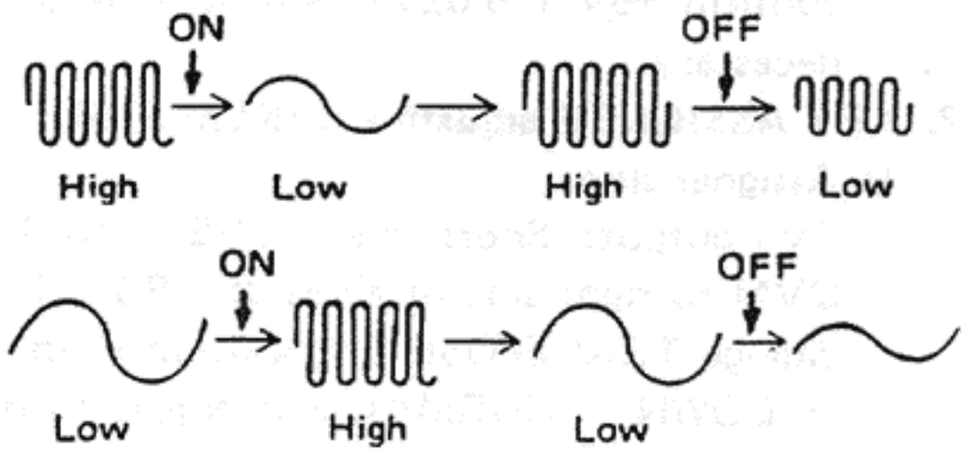

9. VCF KBD TRACK check and adjustment.
Set oscilloscope to DC2V, 1msec, VCO 1~4 LEVEL to 0, RESONANCE to 10, EG INT to 0, KBD TRACK to 10, HOLD to ON. Play C3 and turn CUTOFF to obtain about 4cm (250Hz), then play C4 and confirm 1.1cm ±0.3cm (1250Hz~414Hz) as in figure 3.

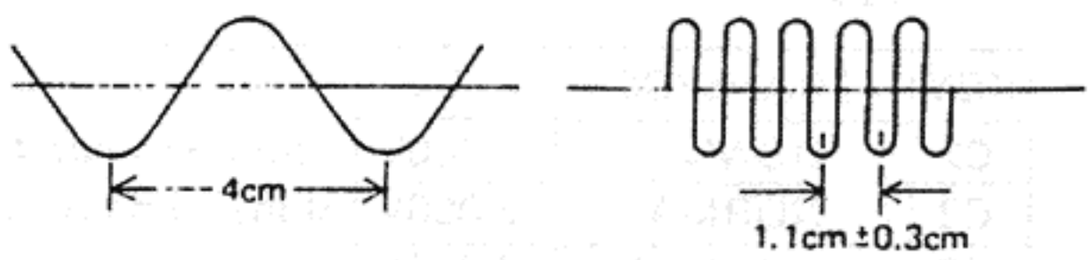

Fig. 3.

Adjust VR11 if necessary.
After check, set KBD TRACK to 0, and HOLD to OFF.

10. VCA EG check.

Set RESONANCE to 10, CUTOFF to 10.
Following chart below, play keys and check VCA EG operation by ear.

A	D	S	R	KEY	Desired value
3	0	0	0	ON	≒ 2,4msec
10	0	0	0		≒ 13sec
0	3	0	0	ON	≒ 10msec
0	10	0	0		≒ 25sec
0	0	10	0	ON	≒ 0 V
0	0	0	0		≒ 5 V
0	0	10	3	ON⇒OFF	≒ 10.2msec
0	0	10	10		≒ 25sec

11. Wheel check and adjustment

EFFECT SW, WHEEL SW pitch deviation adjustment.
Set all VCO OCTAVE selectors to 16', WAVEFORM to , A#4 key on HOLD. Connect WT-12 (METER, OCT M, A#) to SIG OUT and adjust to obtain 0 cent reading.
1) With VCO1 LEVEL at 10, EFFECT MODE SW at SYNC, SINGLE, switch EFFECT SW ON and OFF and confirm WT-12 meter indication change of within
2) With VCO1 LEVEL at 10 and EFFECT SW off, change BEND SW between VCO1/SLAVE, PITCH, and VCF positions and confirm ±1cent WT-12 reading. Adjust KLM-353 VR-4 if necessary.
3) With the same settings as 2) above, change MG switch position and confirm same ±1 cent reading. Adjust KLM-353 VR-5 if necessary.
After check, turn VCO 1 LEVEL back to .
4) VCO2 LEVEL to 10, turn TUNE knob to obtain 0cent.
Set EFFECT MODE SW to X-MOD, SINGLE, X-MOD INT to 0, then turn EFFECT SW ON and OFF and check amount of change in tuner indication.
5) Perform step 4) for VCO3 and VCO4 in the same way.
6) Select VCO exhibiting the greatest variation and adjust VR-15 (KLM-354) to minimize change when EFFECT SW is turned on and off.

Due to circuit modification, please make adjustment according to following measures on the MP-4 after MAY production.

[KLM-355]

1 NOISE GAIN check and adjustment.
Set VCO1, 2, 3, 4 to 0
Set NOISE LEVEL to 10 and confirm noise level 3.0 ~ 5.0 V P-P
If necessary, adjust VR20
After check, turn NOISE LEVEL back to 0.

2 VCF VCA check and adjustment
Set VCO1, 2, 3, 4 to 0 FC to 10 RESONANCE to 0
VCAEG A to 0, D to 0, S to 0, R to 0.
Play any single key and confirm noise level

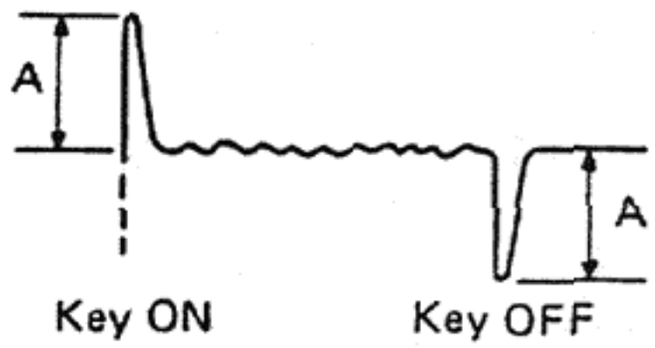

A: Less than 100mV
B: Less than 10mV

If necessary adjust VR11 to minimum for A according to above modification. We don't need VCF KBD TRACK adjustment (Regarding to VR11)

9. PARTS LIST

PARTS NAME SPECIFICATIONS	PARTS CORD	Q'TY
CARBON RESISTORS NOT LISTED		
SOLID RESISTORS		
1/4W KY 10MΩ	11013810	7
METAL FILM RESISTORS		
1/4FYLC 243Ω	12313243	1
1/4FYLC 806Ω	12313806	4
1/4FYLC 1.00KΩ	12314100	1
1/4FYLC 2.00KΩ	12314200	2
1/4FYLC 9.09KΩ	12314909	1
1/4FYLC 4.87KΩ	12314887	1
1/4FYLC 10.0KΩ	12315100	1
1/4FYLC 14.3KΩ	12315143	2
1/4FYLC 15.0KΩ	12315150	2
1/4FYLC 475Ω	12313475	4
1/4FYLC 49.9KΩ	12315499	5
1/4FYLC 54.9KΩ	12315549	8
1/4FYLC 14.0KΩ	12315140	1
1/4FYLC 95.3KΩ	12315953	4
1/4FYLC 100KΩ	12316100	3
1/4FYLC 196KΩ	12316196	1
1/4FYLC 215KΩ	12316215	1
1/4FYLC 240KΩ	12316240	4
1/4FYLC 300KΩ	12316300	4
1/4FYLC 115KΩ	12316115	4
1/2FY 3.01MΩ	12217301	4
1/8BY 10.0KΩ	12065100	3
1/8BY 20.0KΩ	12065200	2
1/8BY 100KΩ	12066100	18
1/8BY 200KΩ	12066200	7
1/8BY 55KΩ	12065550	4
BLOCK RESISTORS		
RKC 1/8B5J 10K	13435100	1
THERMISTORS		
TD5A150DA 500Ω	18032350	1
MYLAR CAPACITORS		
50V 0.001μFK	20003410	2
50V 0.0047μFK	20003447	2
50V 0.01μFK	20003510	1
50V 0.047μFK	20003547	10
50V 0.056μFK	20003556	2
50V 0.1μFK	20003610	1
50V 0.22μFK	20003522	4
50V 0.015μFK	20003515	1
CERAMIC CAPACITORS		
50V 5PF	21252150	1
50V 10PF	21253210	1
50V 22PF	21256222	2
50V 100PF	21256310	2
50V 150PF	21256315	4
50V 330 PF	21256333	3
50V 470PF	21256347	1
50V 1000PF	21277410	4
50V 0.01μF	21289510	11
25V 0.1μF	21238610	36
ELECTROLYTIC CAPACITORS		
A16V 10μF	23007210	28
A16V 47μF	23007247	3
A16V 100μF	23007310	3

PARTS NAME SPECIFICATIONS	PARTS CODE	Q'TY
A16V 6.8μF	23307168	2
A25V 10μF	23011210	2
A50V 0.22μF	23315022	1
A6.3V 1000μF	23003410	1
A50V 1μF	23015110	6
A50V 0.68μF	23315068	4
A50V 0.47μF	23315047	1
B35V 2200μF	23613422	11
B35V 4700μF	23613447	1
POLYPROPYLENE CAPACITORS		
PPC 100V 0.0068μFG		3
PPC 100V 0.001μFG		4
STYROL CAPACITORS		
50V GT 560PF	20502356	1
TANTALUM CAPACITORS		
16V 10μFK	22007210	4
TRANSISTORS		
2SA733AK	30000727	3
2SB744AP	30100328	1
2SC945AK	30202400	1
2SC1345	30202400	1
2SC1583F	30201106	2
2SD794AP	30300528	6
FET		
2SK30A TM-O	30600115	6
2SK30A TM-GR	30600232	1
DIODES		
1S 1555	31000100	70
1S 1885	31000200	4
LED		
PR3932S	31201400	6
IC		
HD14007UBP	32004002	2
HD14013BP	32004009	1
HD14042BP	32004013	1
HD14051BP	32004017	1
HD14066BP	32004004	6
HD14069UBP	32004019	2
HD14071	32004024	1
HD14174BP	32004020	1
MC14504	32020040	1
SSM2033	32029005	4
SSM2044	32029004	1
NJM4556	32009002	1
NJM4558DV	32009001	13
MM5837	32022005	1
M5230L	32011001	1
μPD8049 C-217	32001036	1
TL072	32021011	13
POTENTIOMETERS		
EVH-5LA802B14	36005800	20
EVH-5LA802B15	36005700	2
EVH-5LA802A16	36006000	4
EVH-5LA802B16	36006100	1
EVH-5LA802A26	36006200	2

PARTS NAME SPECIFICATIONS	PARTS CODE	Q'TY
POTENTIOMETERS (cont'd)		
EVH-6LA802B14	36010800	1
EWK-ENAP15B14	36202600	1
EWK-UVAP15B26	36202700	1
K1611008TE 10K TOKU	36014000	1
EWH-H8AP20B14	36202800	1
CERAMIC RESONATORS		
EFO-A6ROMO1 6MHz	33500900	1
ROTARY SW		
SRM-1034362	37001500	9
SLIDE SW		
SSB-122020	37301700	4
SSB-123014	37301600	9
SSB-12202	37301200	
TACT SW		
KHC-11901	37503400	6
SEMI-FIXED RESISTORS		
8φ B 10KΩ	35121310	1
8φ B 20KΩ	35121320	1
8φ B 100KΩ	35121410	2
8φ B 1MΩ	35121510	2
10φ 150ΩB	35201115	4
10φ 220ΩB	35201122	2
10φ 470ΩB	35201147	2
10φ 10KΩB	35201310	8
10φ 22KΩB	35201322	4
10φ 100KΩB	35201410	3
10φ 4.7KΩB	35201247	1
PHONE JACK		
STREO 0927#02	45300400	1
SG 7627#03	45001300	1
3P 0902#01	45300500	4
2P 9022#01	45300600	1
3P 0927#01	45300700	1
2P 0983#00	45300800	2
PCB		
KLM-353	34035300	1
KLM-354	34035400	1
KLM-355	34035500	1
KLM-356	34035600	1
KLM-376	34037600	1
KLM-372	34037200	
KLM-357	34035700	1
SPARK KILLER		
PME271M533	21900200	1
FUSE HOLDER		
S-N5053	51501600	6
POWER TRANSFORMER		
TA002 100V, 117V	40006000	1
T8002 220V, 240V	40006100	1
POWER SW		
1801-0121	37503800	1
WOODEN CASE		

PARTS NAME SPECIFICATIONS	PARTS CODE	Q'TY
FRONT PANEL		
KOC-C20112	64052400	1
PHONE JACK PLATE		
KOC-C30177	64052500	1
METAL FITTING OF SLIDE SW		
KOC-C40266	64052600	1
METAL FITTING OF TACT BOARD		
KOC-C40395 No.1 (U)	64052700	1
KOC-C40395 No.2 (L)	64052800	1
METAL FITTING OF MG C. B		
KOC-C40396	64052900	1
METAL FITTING OF CONTROL WHEEL		
KOC-C40402	64053000	2
METAL FITTING OF KLM-376		
KOC-C40405	64053200	1
RADIATION BOARD		
KOC-C40406	56001800	1
POWER PLATE		
KOC-C40397	64053400	1
SMALL RADIATION BOARD		
KOC-C40416	56001600	1
KOC-C40417	56001700	1
CONTROL PANEL		
KOC-E20028	64607900	1
CONTROL WHEEL		
KOC-E40091	64608000	2
TACT SW KNOB		
ORANGE KOC-E30019 No.5	62003400	1
IVORY KOC-E30019 No.2	62002900	1
GRAY KOC-E30019 No.6	62003300	4
SLIDE SW KNOB		
SSB L = 9 BLACK	62001800	
RUBBER FEET		
HARD No.5	50002100	4
KEY BOARD		
ESK-721 (E-C)	42001800	1
MODEL NUMBER PLATE		
KOC-C40144	64050500	1