AUDIO VIDEO SURROUND RECEIVER

KRF-X9080D/X9080D-S
VR-8070/8070-S/8060-S
SERVICE MANUAL

KENWOOD

© 2004-7 PRINTED IN KOREA
B51-5916-00 (K/K) 933

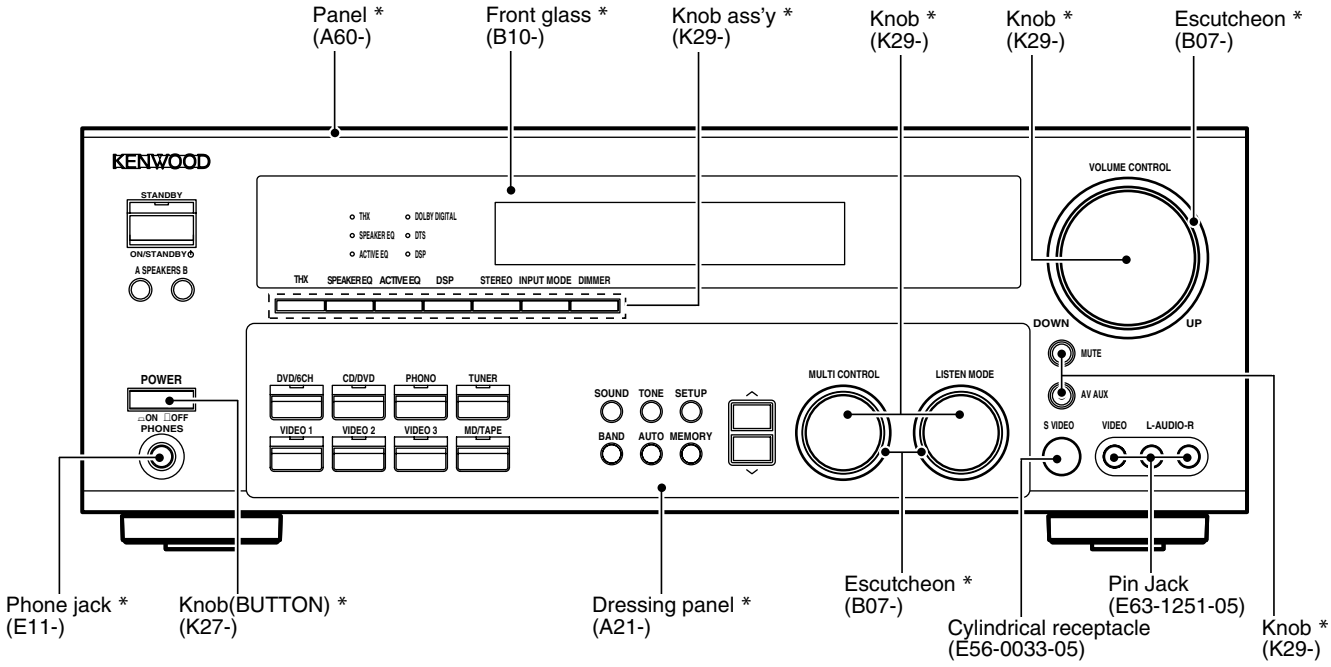

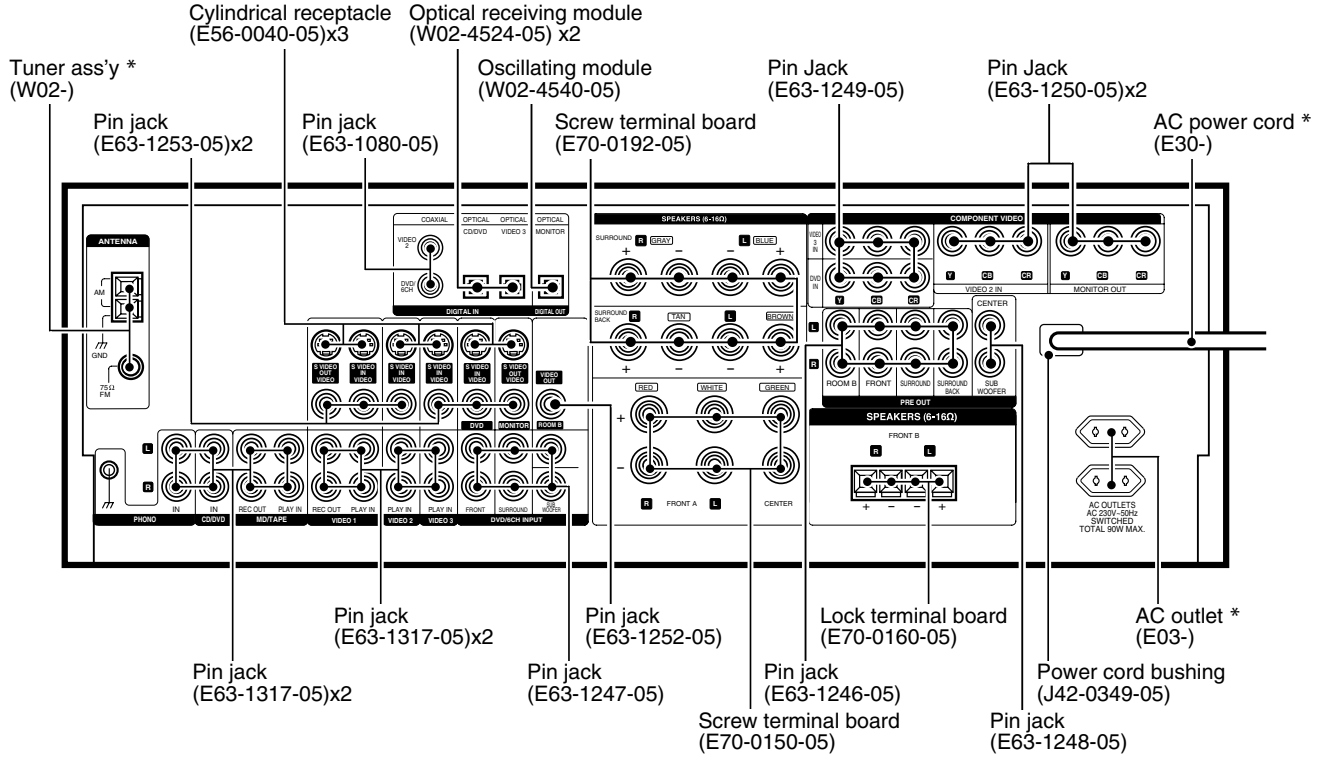

Illust. is KRF-X9080D.

*** Refer to parts list on page 44.**

KRF-X9080D/VR-8070/8060

CONTENTS / ACCESSORIES / CAUTIONS

CONTENTS

CONTENTS / ACCESSORIES / CAUTIONS 2
EXTERNAL VIEW 3
ADJUSTMENT 4
INTERCONNECTION DIAGRAM 5
PC BOARD 7
SCHEMATIC DIAGRAM 21
EXPLODED VIEW 42
PARTS LIST 44
SPECIFICATIONS 59

ACCESSORIES

FM indoor antenna (1)

U.S.A. and Canada (T90-0905-05)

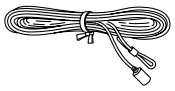

Other countries (T90-0877-05)



AM loop antenna (1) (T90-0852-05)

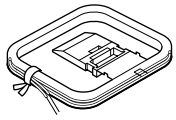

AC plug adapter (1) (E03-0508-00)

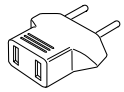

Use to adapt the plug on the power cord to the shape of the wall outlet. (Accessory only for regions where use is necessary.)

Remote control unit (1) (See the below table)

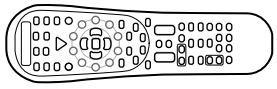

Batteries (R6/AA) (2)

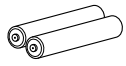

REMOTE CONTROL vs MODEL

MODEL	PARTS #	REMOTE CONTROL #	DESTINATION
VR-8070	A70-1659-05	RC-R0827	K1P1
VR-8070-S			K2P2
KRF-X9080D	A70-1620-05	RC-R0820	Y1
KRF-X9080D-S			X1
KRF-X9080D	A70-1621-05	RC-R0821	E1
KRF-X9080D-S			E2
VR-8060-S	A70-1622-05	RC-R0822	K3P3

CAUTIONS

Resetting the Microcomputer

The microcomputer may malfunction (unit cannot be operated, or shows an erroneous display) if the power cord is unplugged while the power is ON, or due to some other external factor. If this happens, execute the following procedure to reset the microcomputer and return the unit to its normal operating condition.

- Please note that resetting the microcomputer will clear the contents of the memory and return the unit to the state it was in when it left the factory.

For the U.S.A. and Canada

Unplug the power cord from the wall outlet, then plug it back in while holding down the POWER ON/STANDBY ⏻key.

For other countries

With the power cord plugged in, turn the POWER ON/OFF key OFF. Then, while holding down the ON/STANDBY ⏻key, press POWER ON/OFF key.

Memory back up function

Please note that the following items will be deleted from the unit's memory if the power cord is disconnected from the AC outlet for approximately 1 day.

- Power mode
- Input selector settings
- Picture output
- Speaker ON/OFF
- Volume level
- BASS, TREBLE, INPUT level
- TONE ON/OFF
- LOUDNESS ON/OFF
- Dimmer level
- MD/TAPE settings
- Listen mode setting
- Speaker settings
- Distance setting
- Input mode setting
- Sound mode settings
- Broadcast band
- Frequency setting
- Preset stations
- Tuning mode
- ACTIVE EQ mode
- SPEAKER EQ mode

EXTERNAL VIEW

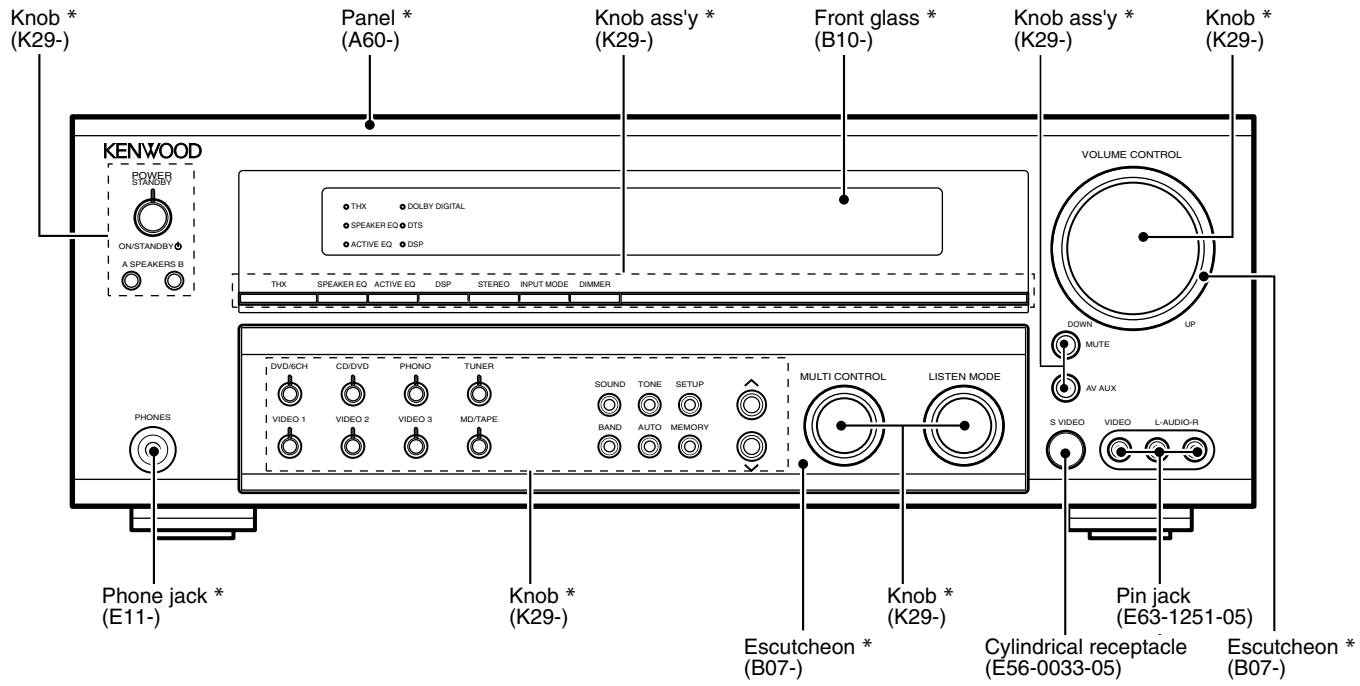

Illust. is VR-8070.

*** Refer to parts list on page 44.**

ADJUSTMENT

KRF-X9080D/X9080D-S, VR-8070/8070-S

No.	ITEM	INPUT SETTINGS	OUTPUT SETTINGS	RECEIVER SETTINGS	ALIGNMENT SETTINGS	ALIGNMENT POINTS	FIG.
AUDIO SECTION			SPEAKER : A				
<1>	IDLE CURRENT	-	CN11, FL ch. CN10, FR ch. CN14, SL ch. CN13, SR ch. CN12, C ch. CN15, SBL ch. X09(A/4) CN706, SBR ch. X13(F/6)	(FRONT 2ch MODE) Volume: Minimum	VR1(FL) VR2(FR) VR3(SL) VR4(SR) VR5(CENTER) VR6(SBL) X09(A/4) VR702(SBR) X13(F/6)	Adjust every potentiometer 10 minutes later after turned the power on.	

VR-8060-S

No.	ITEM	INPUT SETTINGS	OUTPUT SETTINGS	RECEIVER SETTINGS	ALIGNMENT POINTS	ALIGN FOR	FIG.
AUDIO SECTION			SPEAKER : A				
<1>	IDLE CURRENT	-	CN11, FL ch. CN10, FR ch. CN14, SL ch. CN13, SR ch. CN12, C ch. CN15, SW ch. X09(A/5)	(FRONT 2ch MODE) Volume: Minimum	VR1(FL) VR2(FR) VR3(SL) VR4(SR) VR5(CENTER) VR6(SUB WOOFER) X09(A/5)	Adjust every potentiometer 10 minutes later after turned the power on.	

Idling Current Adjustment

All power amplifier stage need idling current adjustment after the installation of TRAIT transistor.

1. Connect a voltmeter to CN11 with the correct polarity as indicated by the PCB silk print.
2. Adjust the preset, VR1 to get 8.8mV (Idling current = 20mA) at the voltmeter reading.
3. Repeat step 1 and 2 for all other channels.

INTERCONNECTION DIAGRAM

KRF-X9080D
KRF-X9080D-S
VR-8070
VR-8070-S

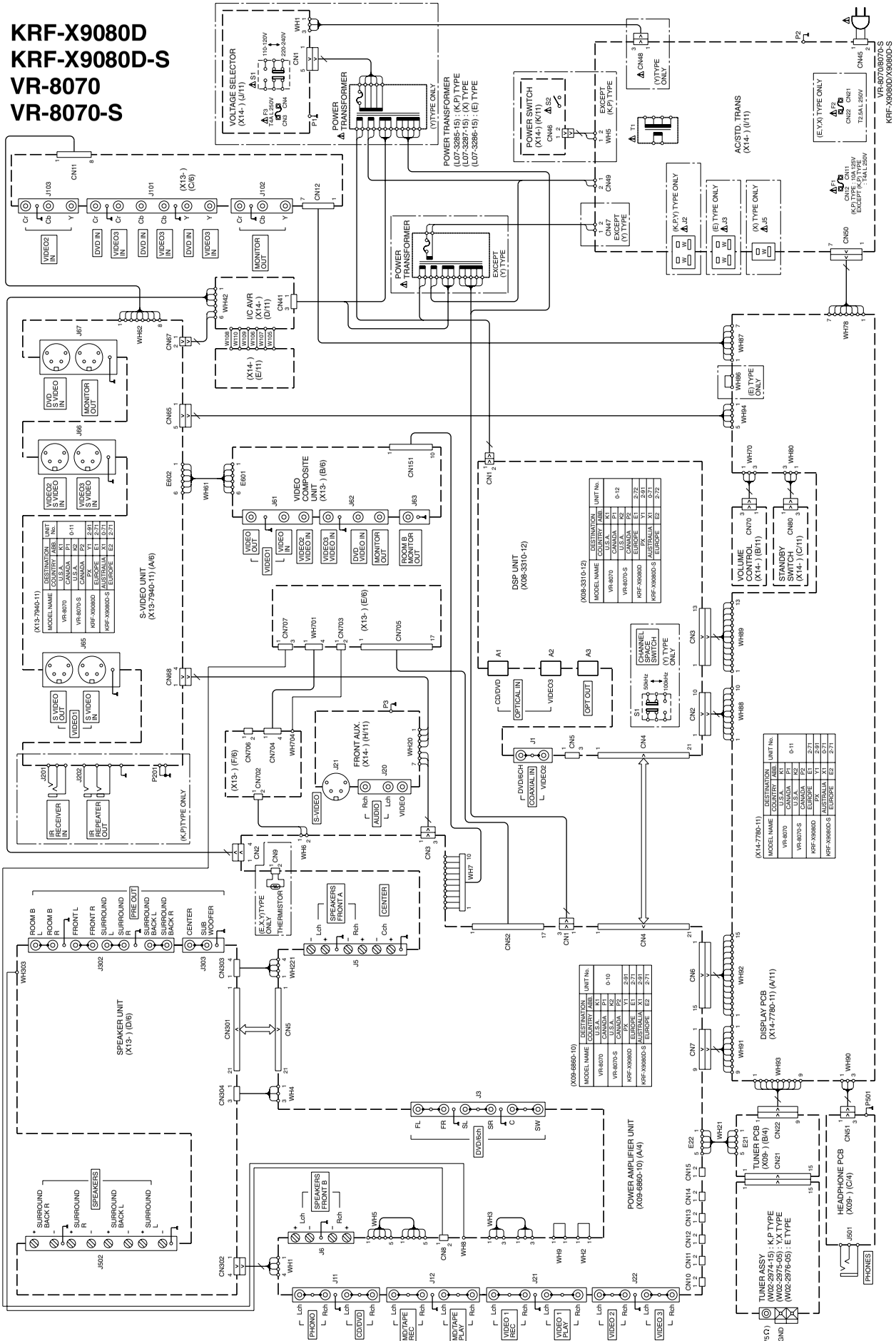

KRF-X9080D/VR-8070/8060

INTERCONNECTION DIAGRAM

VR-8060-S

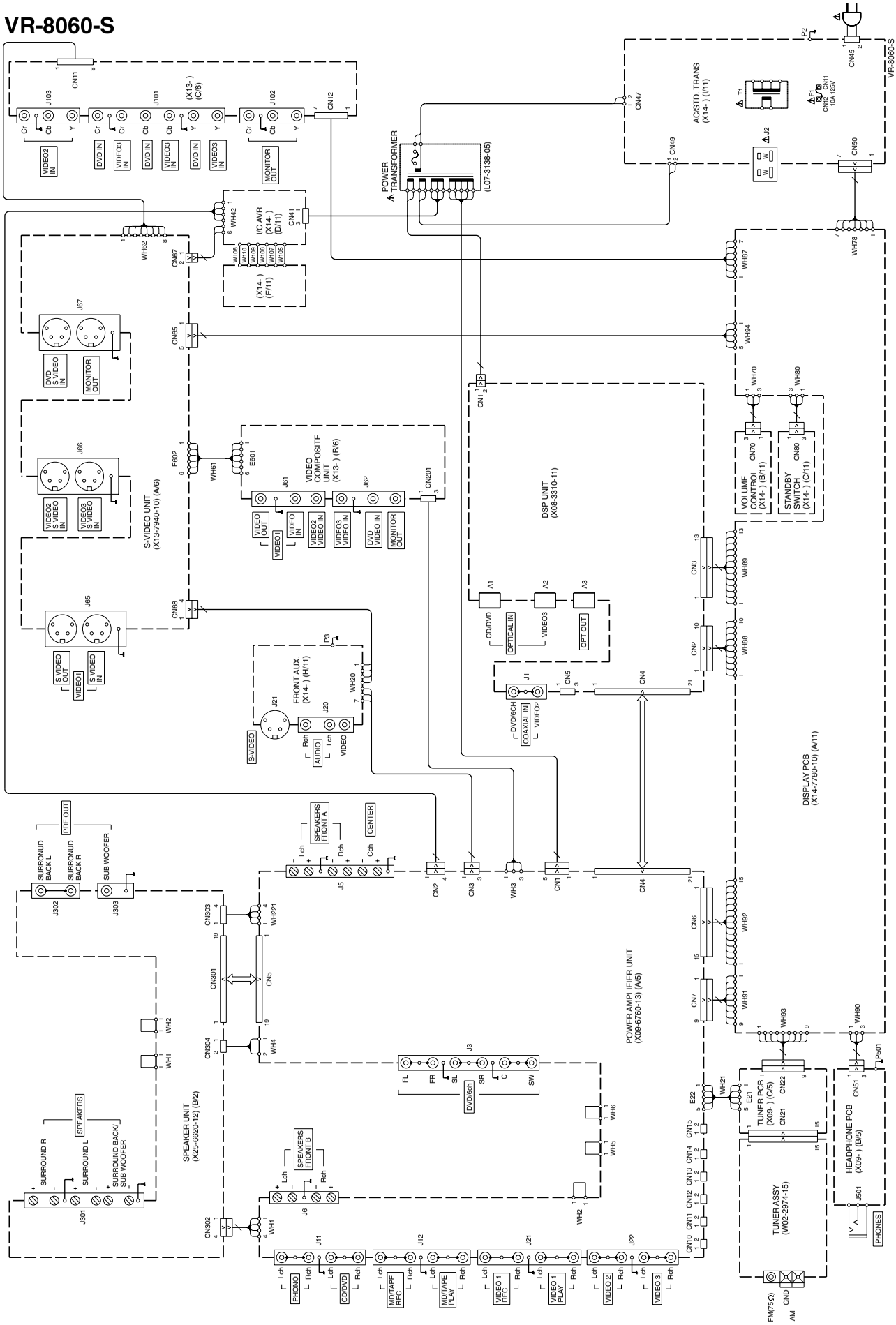

PC BOARD (Component side view)

X08-3310-10 (J70-1715-12) (SIDE A)

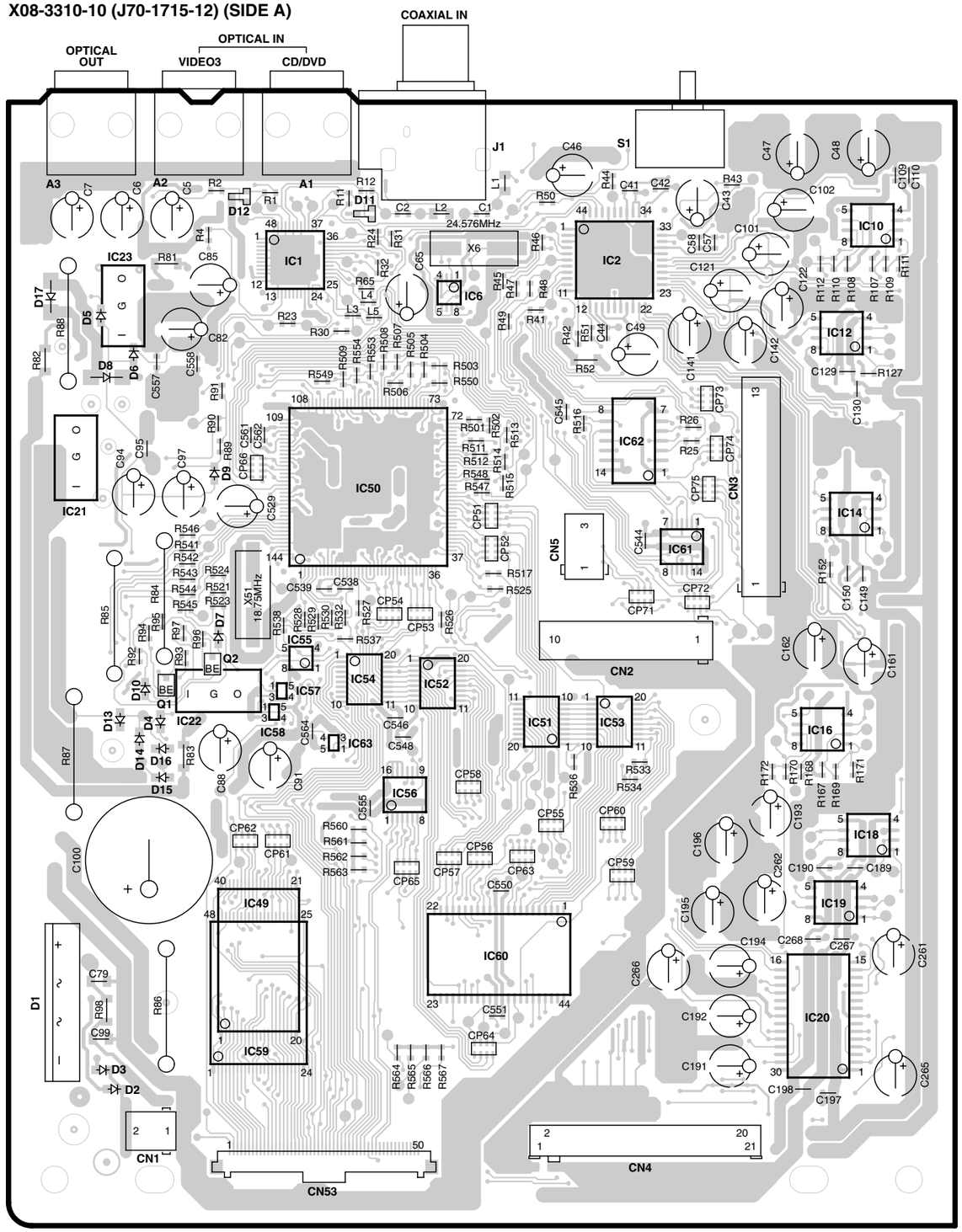

X08-3310-10 (J70-1715-12) (SIDE B)

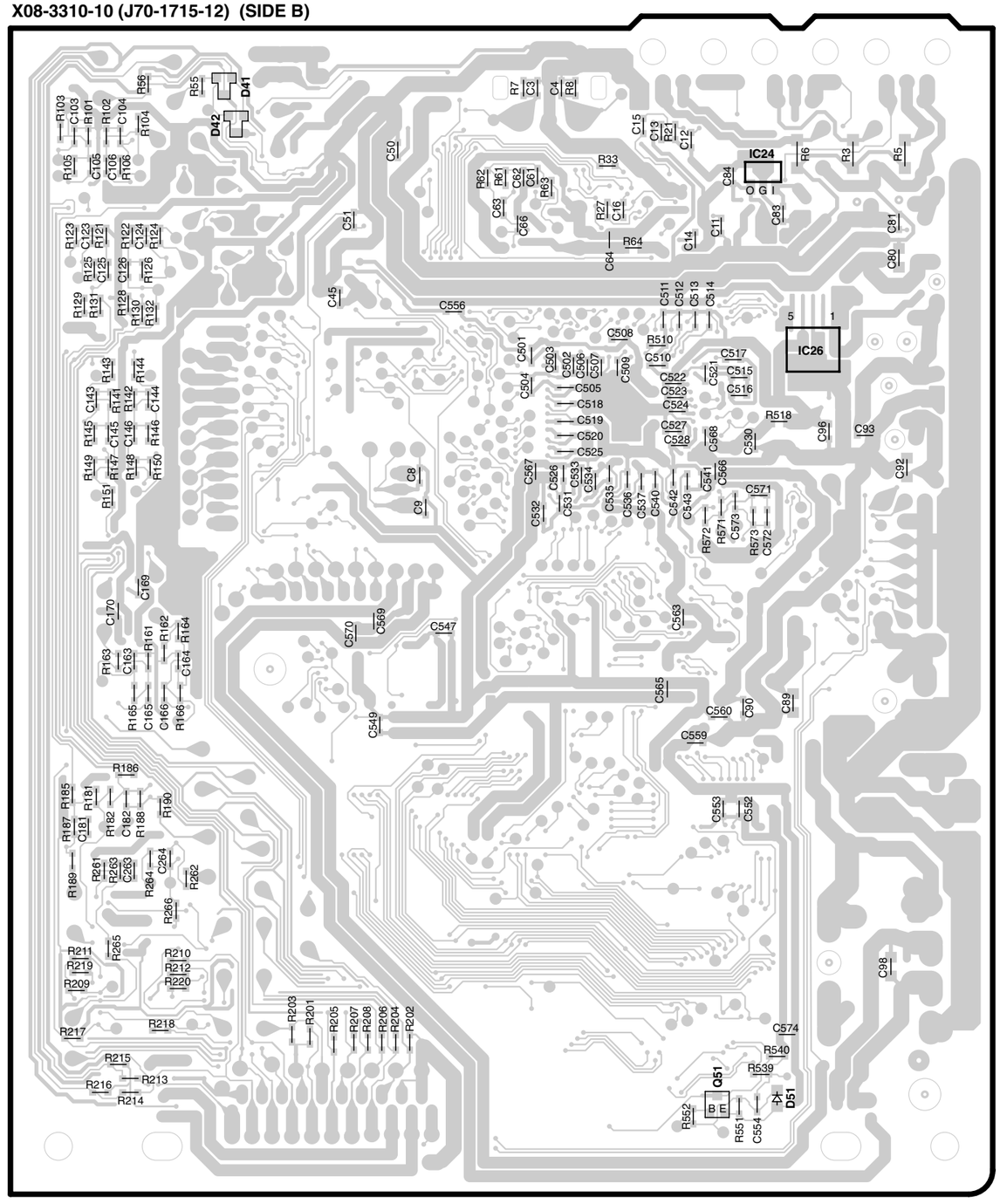

Refer to the schematic diagram for the value of resistors and capacitors.

PC BOARD (Component side view)

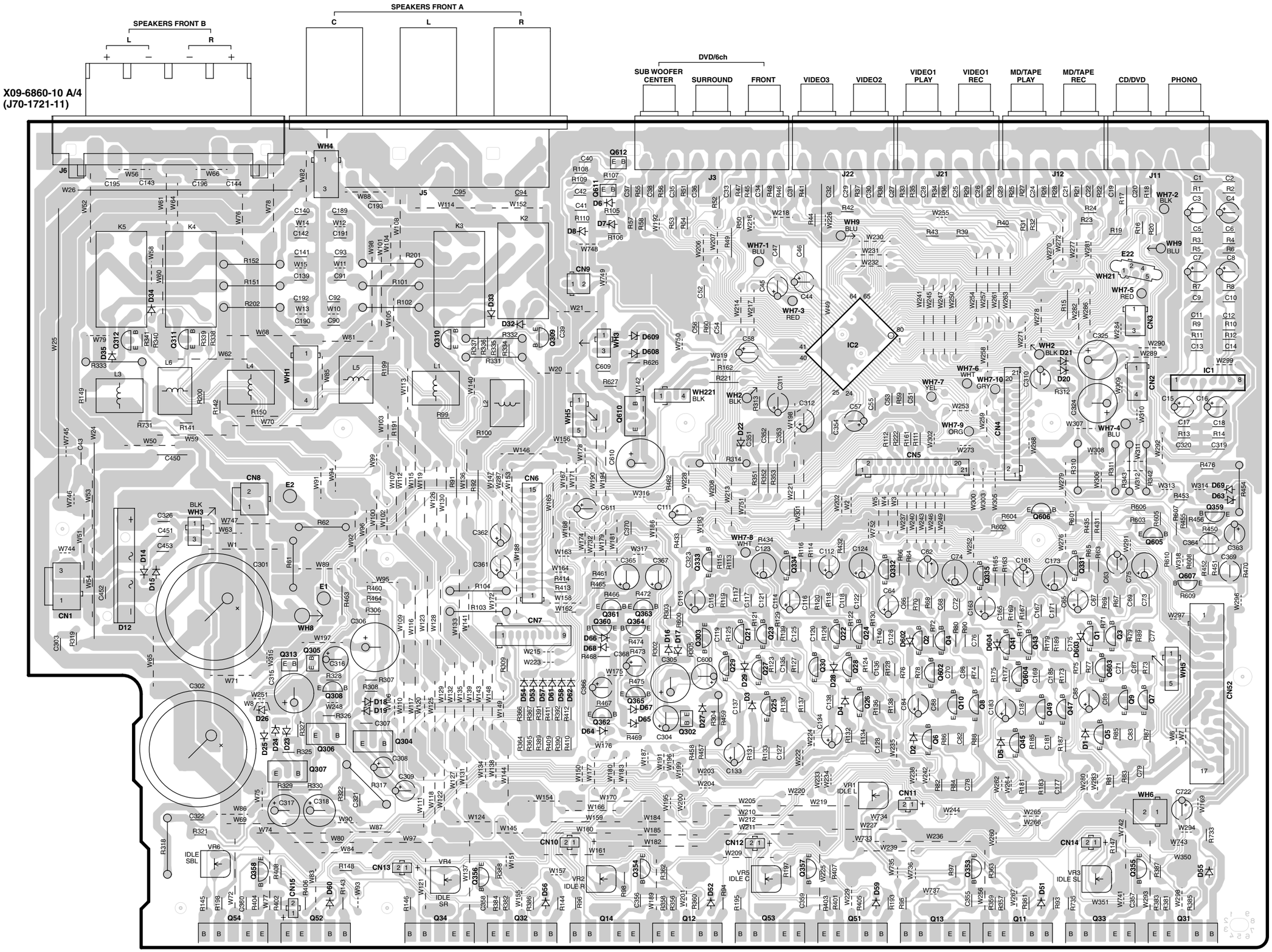

Refer to the schematic diagram for the value of resistors and capacitors.

PC BOARD (Component side view)

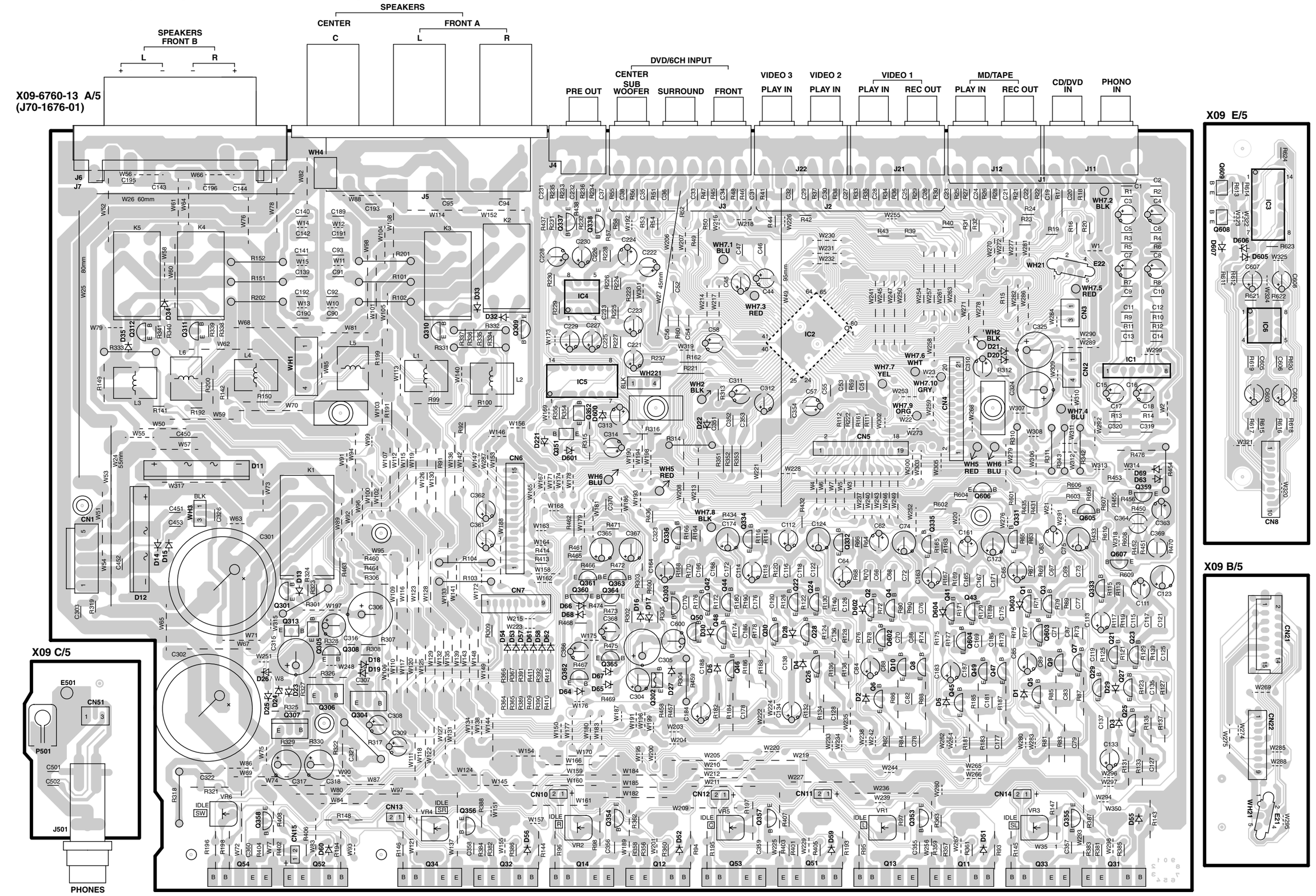

Refer to the schematic diagram for the value of resistors and capacitors.

PC BOARD (Component side view)

X13 E/6

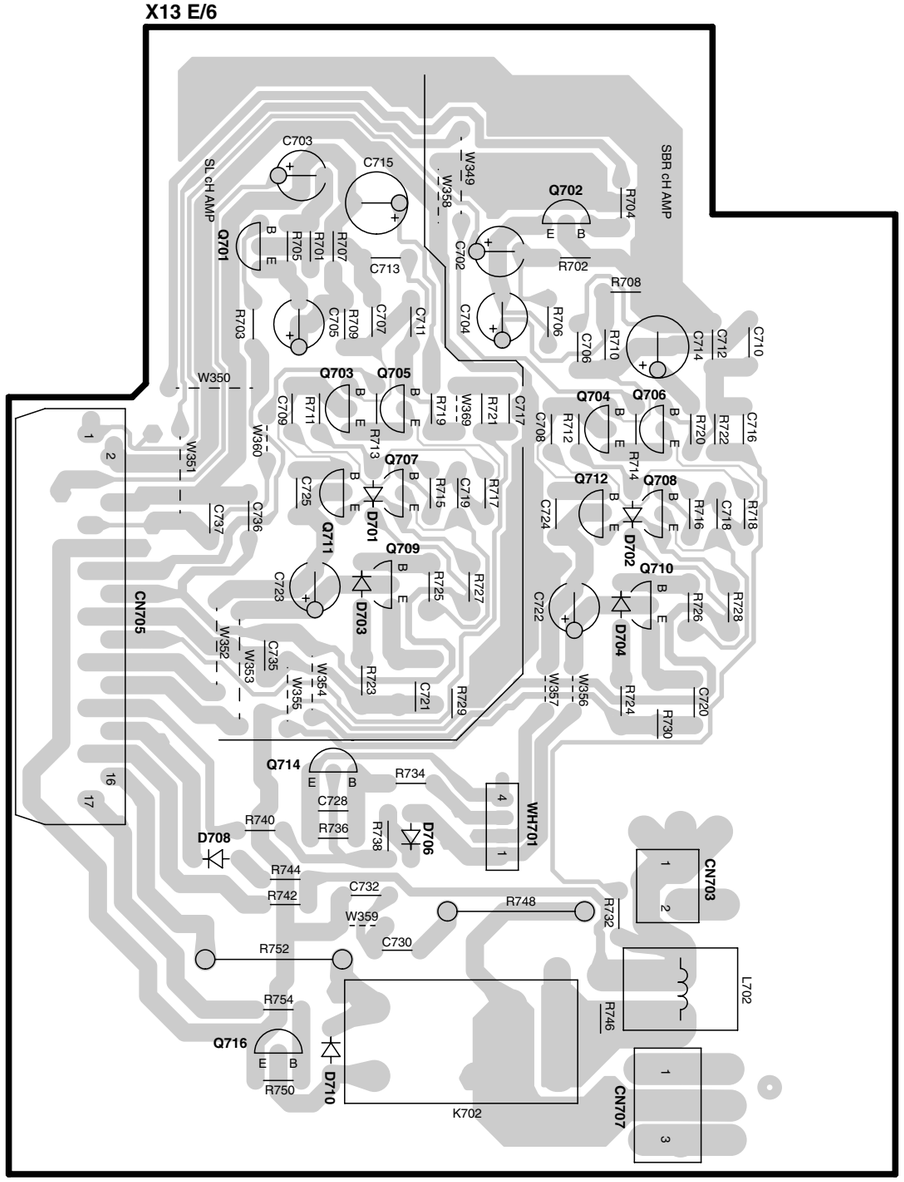

X13 F/6

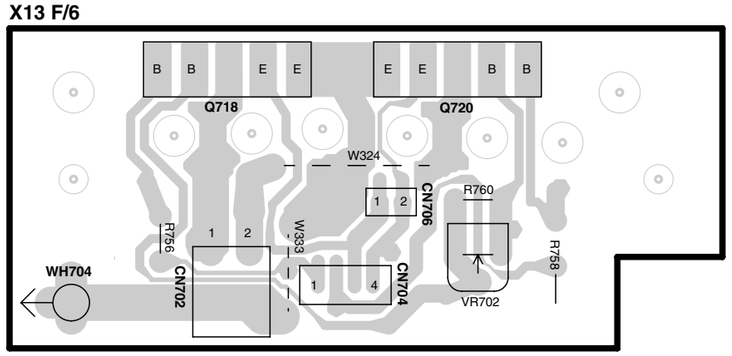

X13 D/6

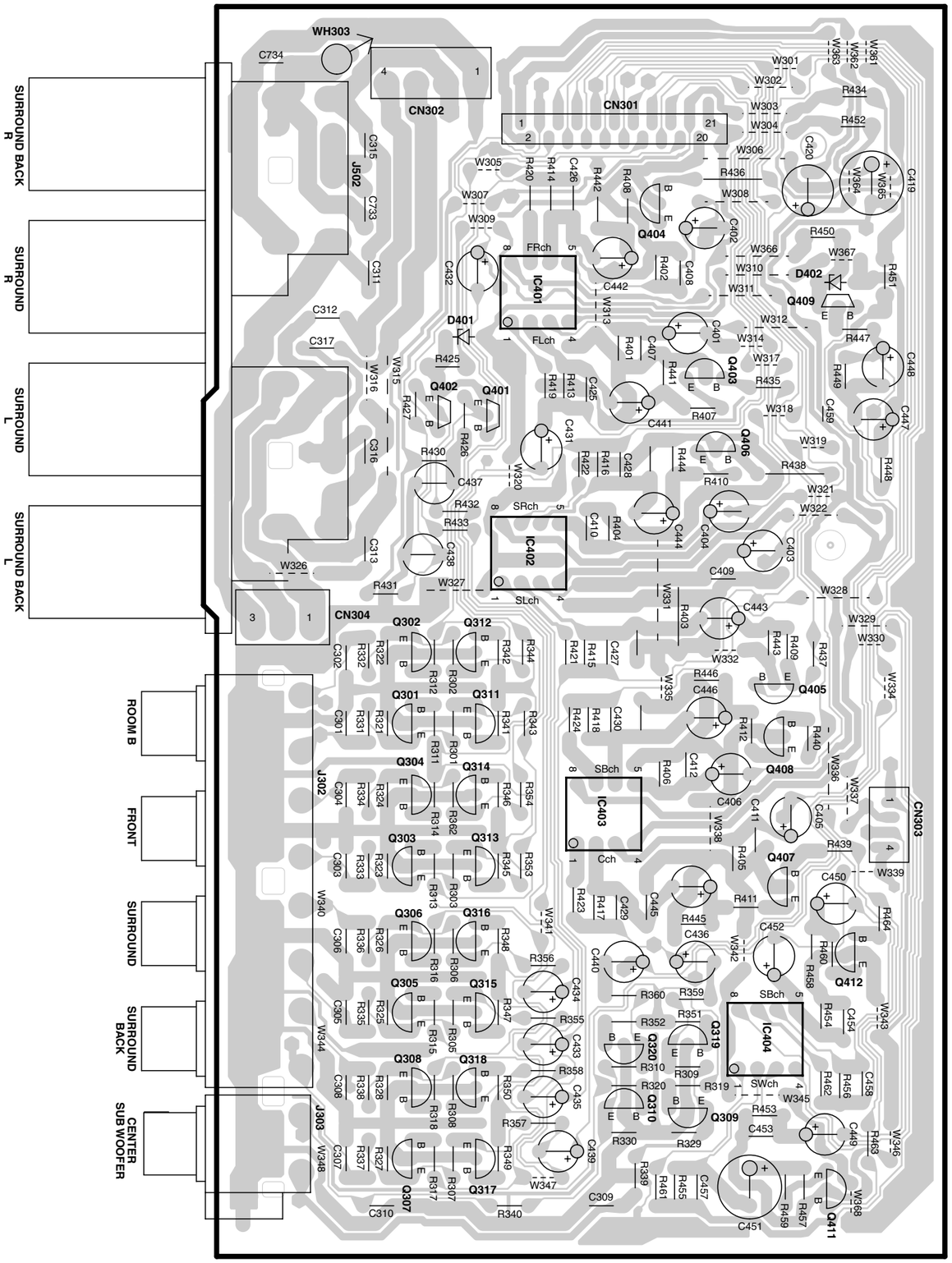

Refer to the schematic diagram for the value of resistors and capacitors.

PC BOARD(Component side view)

X13-7940-10 A/6 (J70-1722-11)

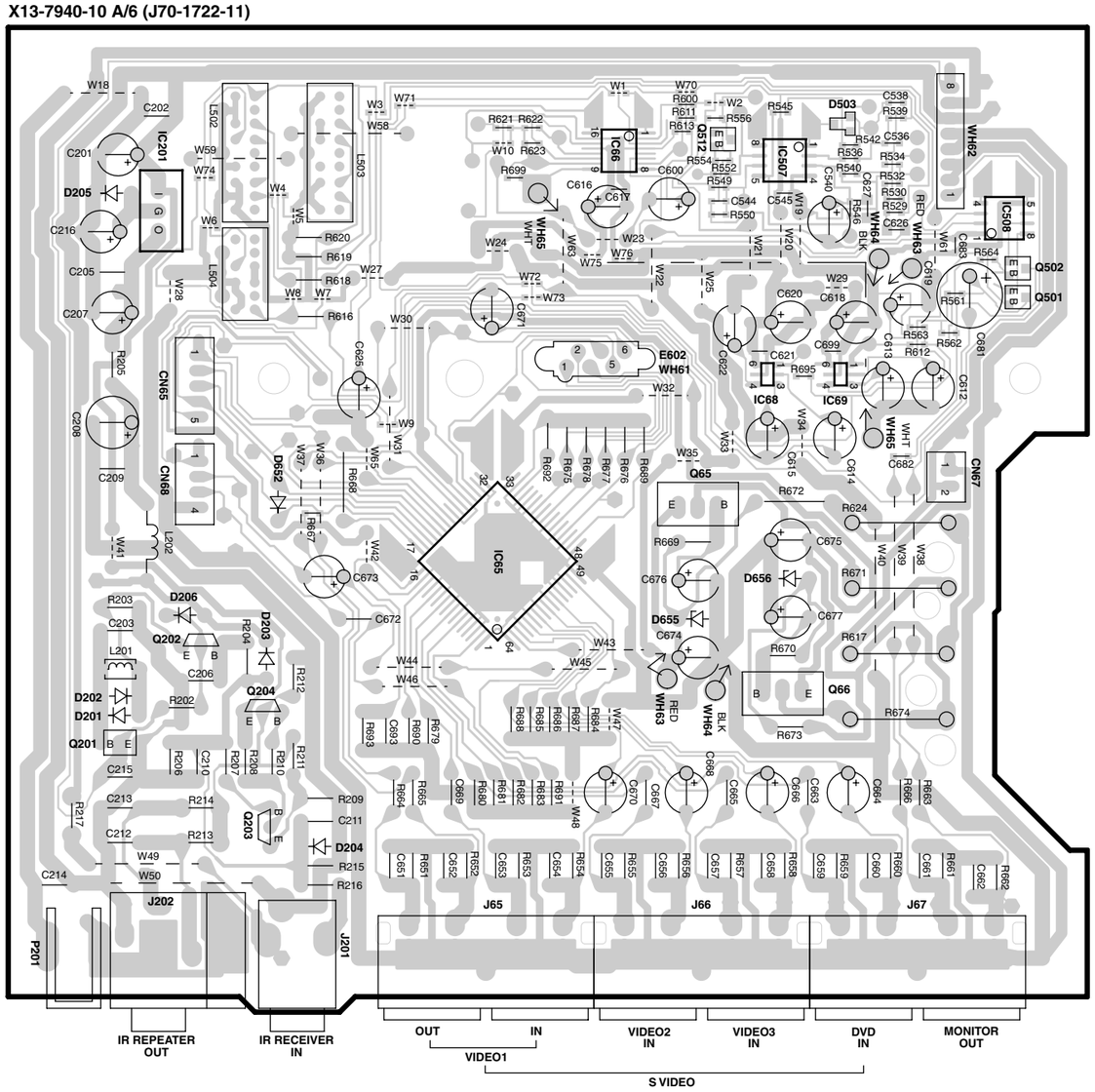

X13 C/6

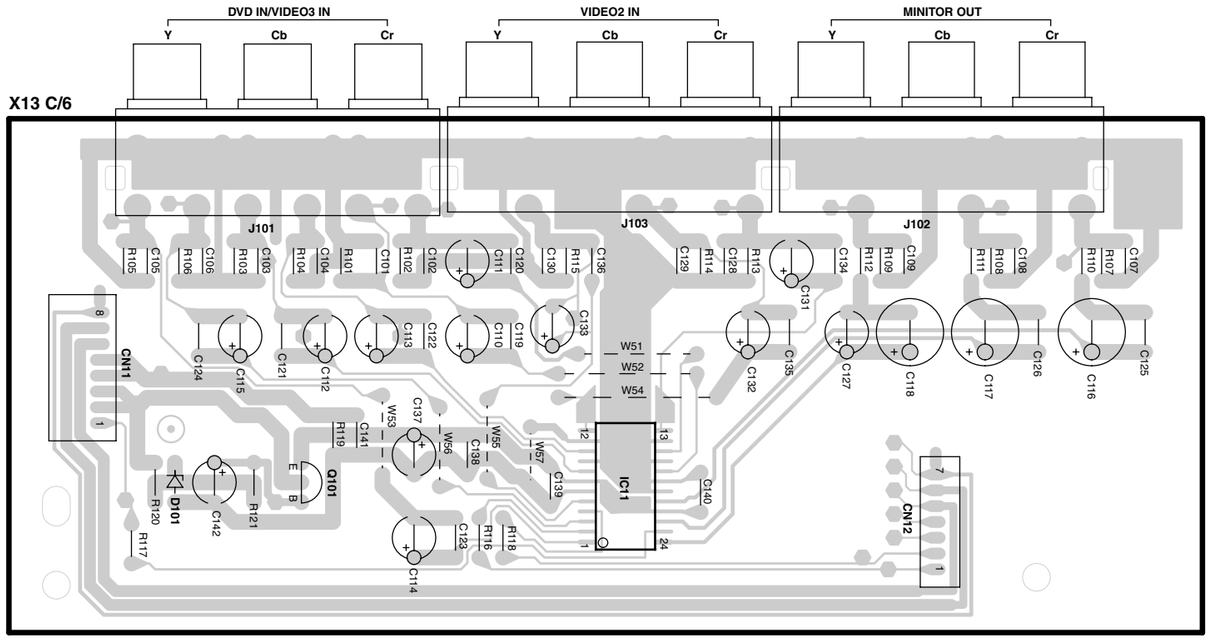

X13 B/6

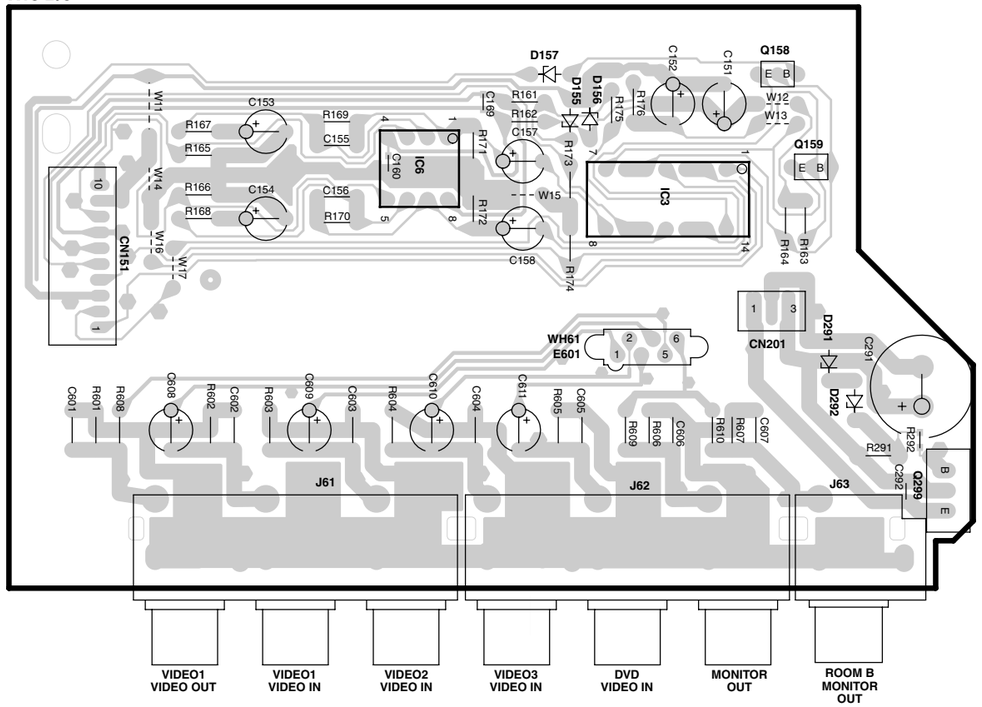

Refer to the schematic diagram for the value of resistors and capacitors.

PC BOARD(Component side view)

X14-7780-10 A/11 (J70-1723-01)

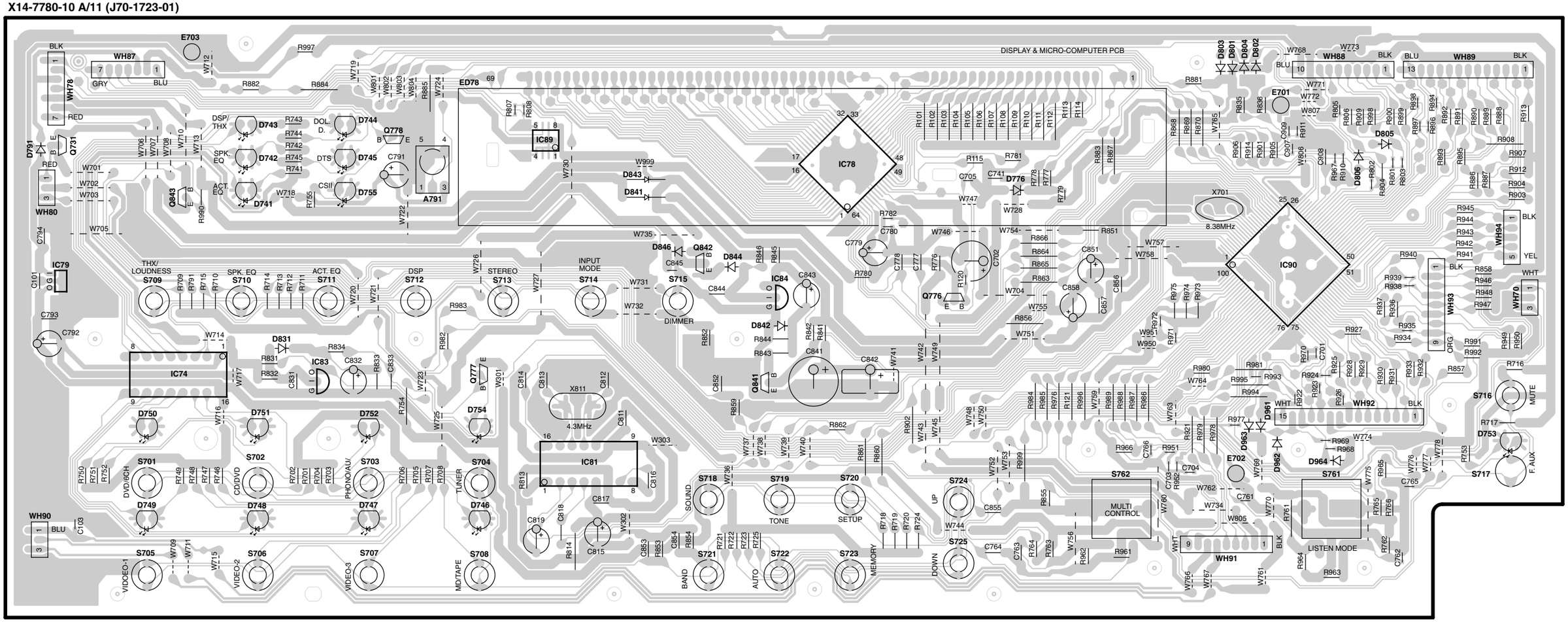

X14 C/11

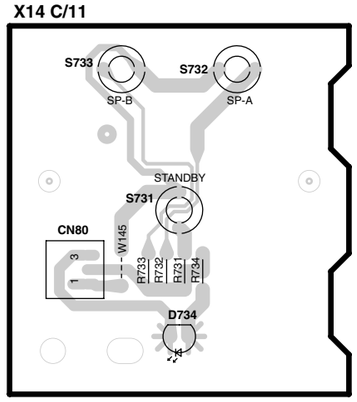

X14 E/11 **X14 D/11**

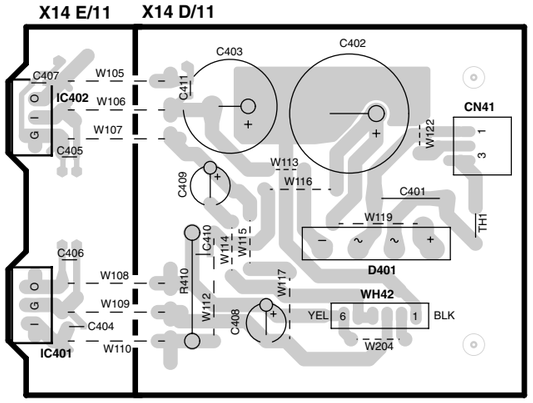

X14 B/11

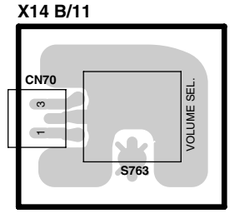

Refer to the schematic diagram for the value of resistors and capacitors.

PC BOARD(Component side view)

X14 I/11

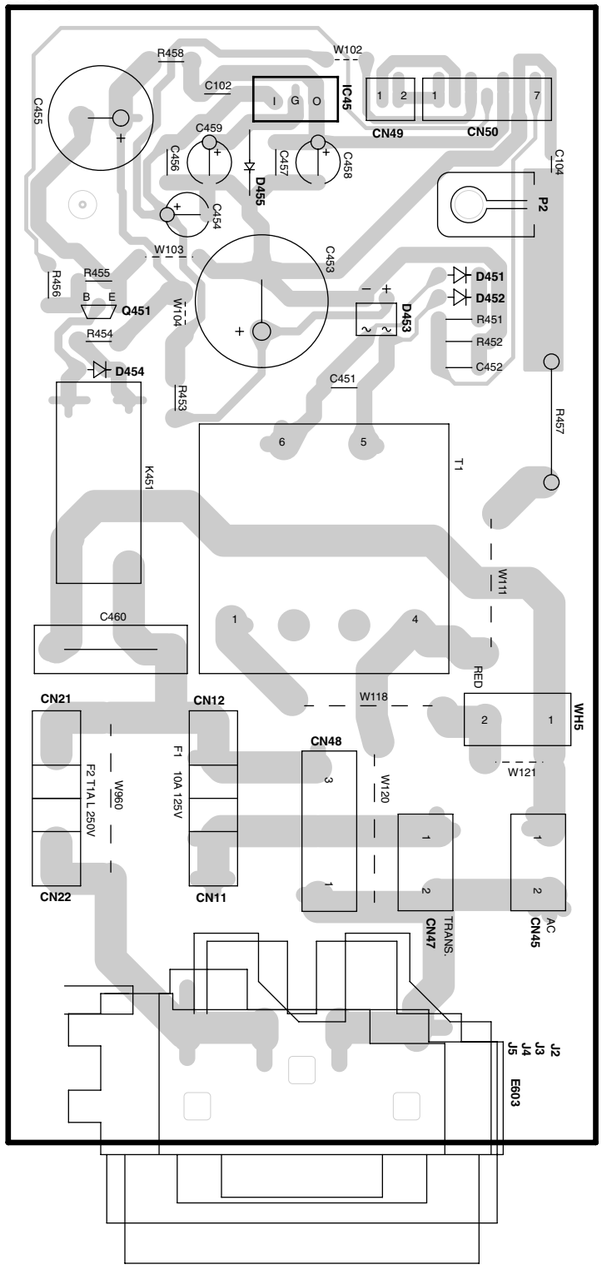

X14 J/11

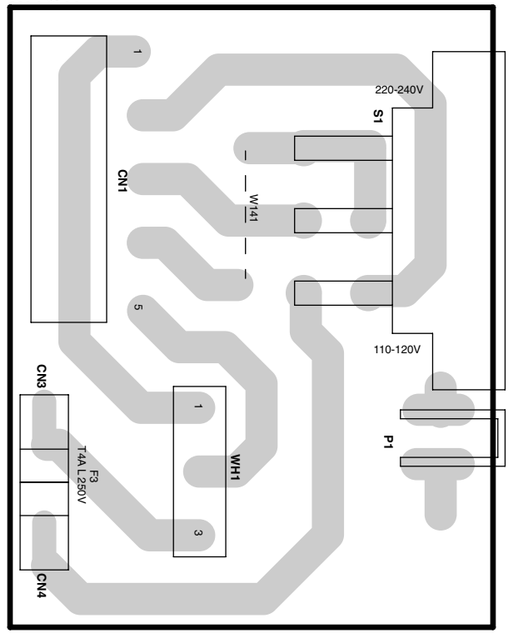

X14 H/11

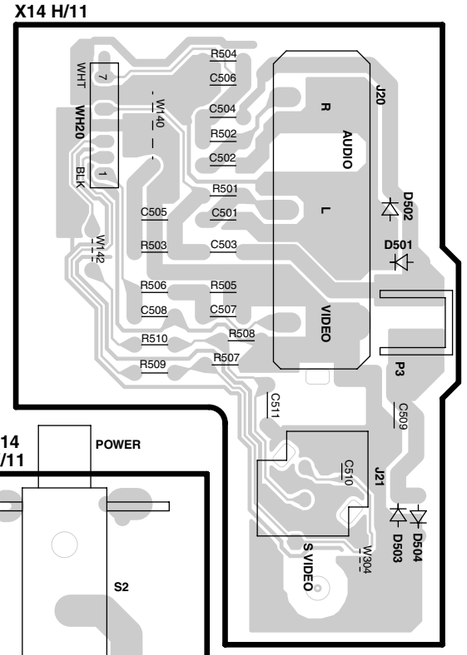

X14 K/11

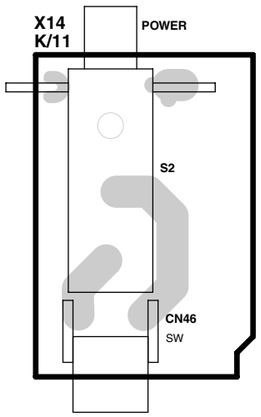

X25-6620-12 B/2 (J70-1704-32)

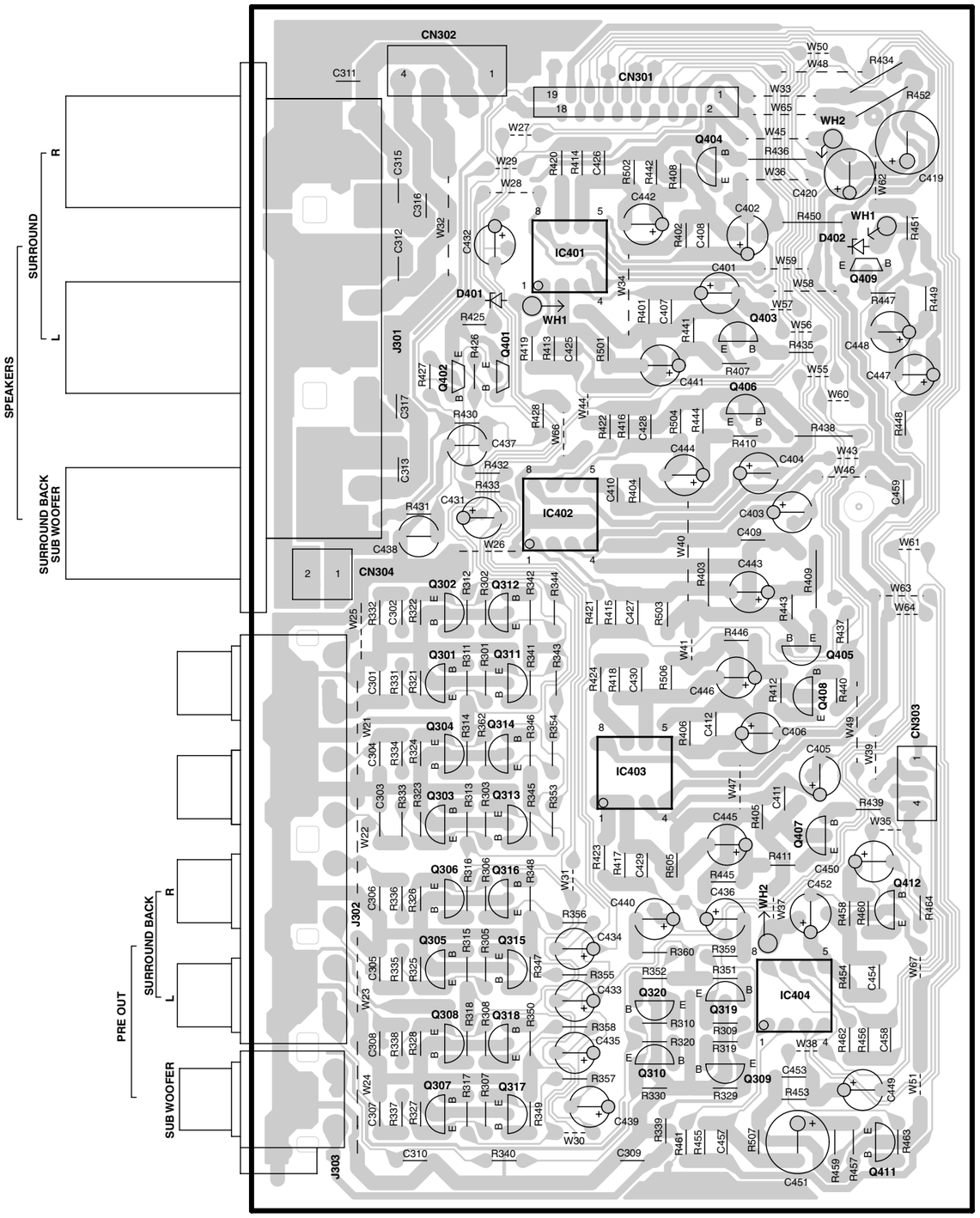

Refer to the schematic diagram for the value of resistors and capacitors.

KRF-X9080D/VR-8070/8060

(X08-3310-11)

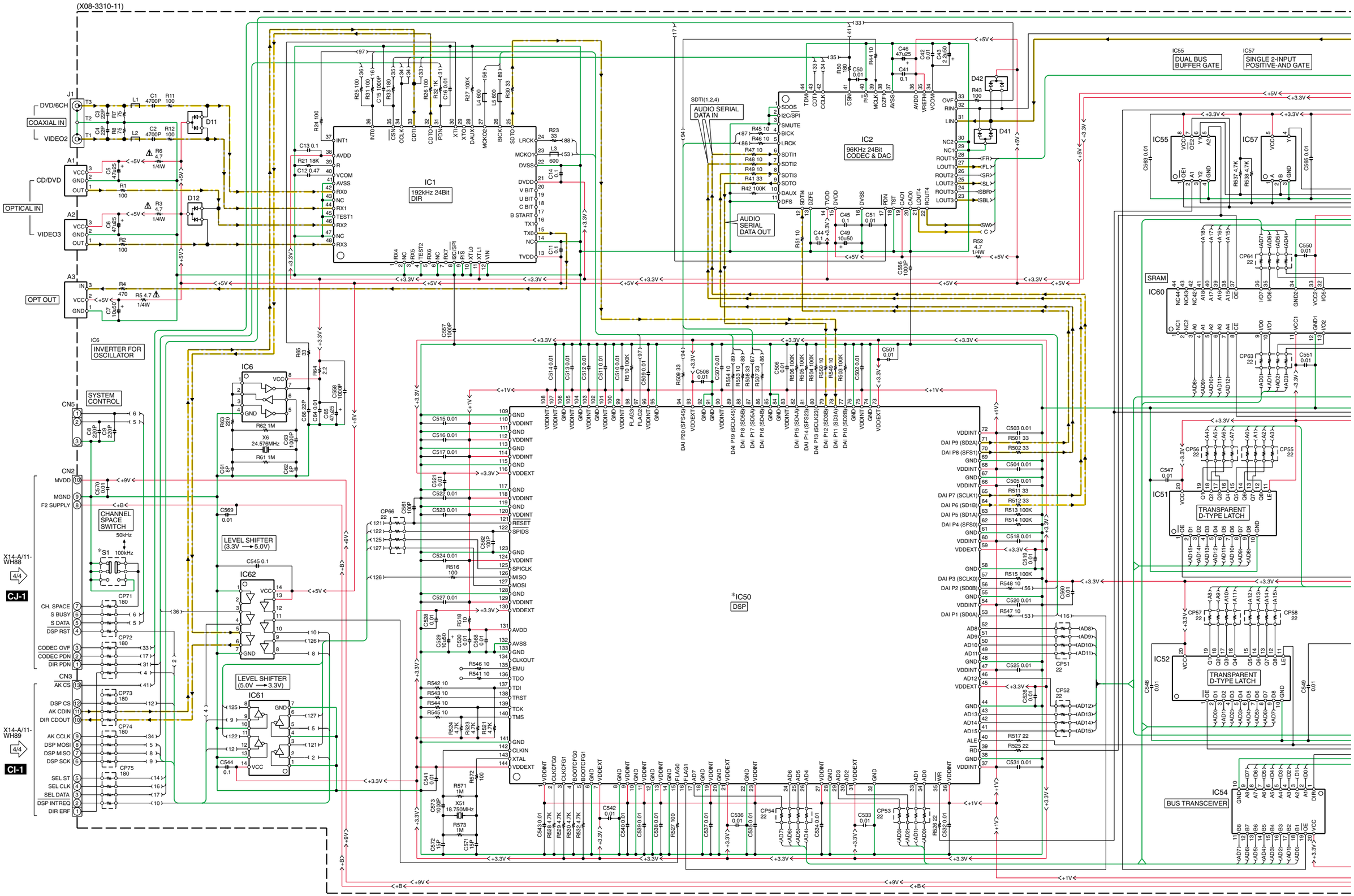

KRF-X9080D/VR-8070/8060

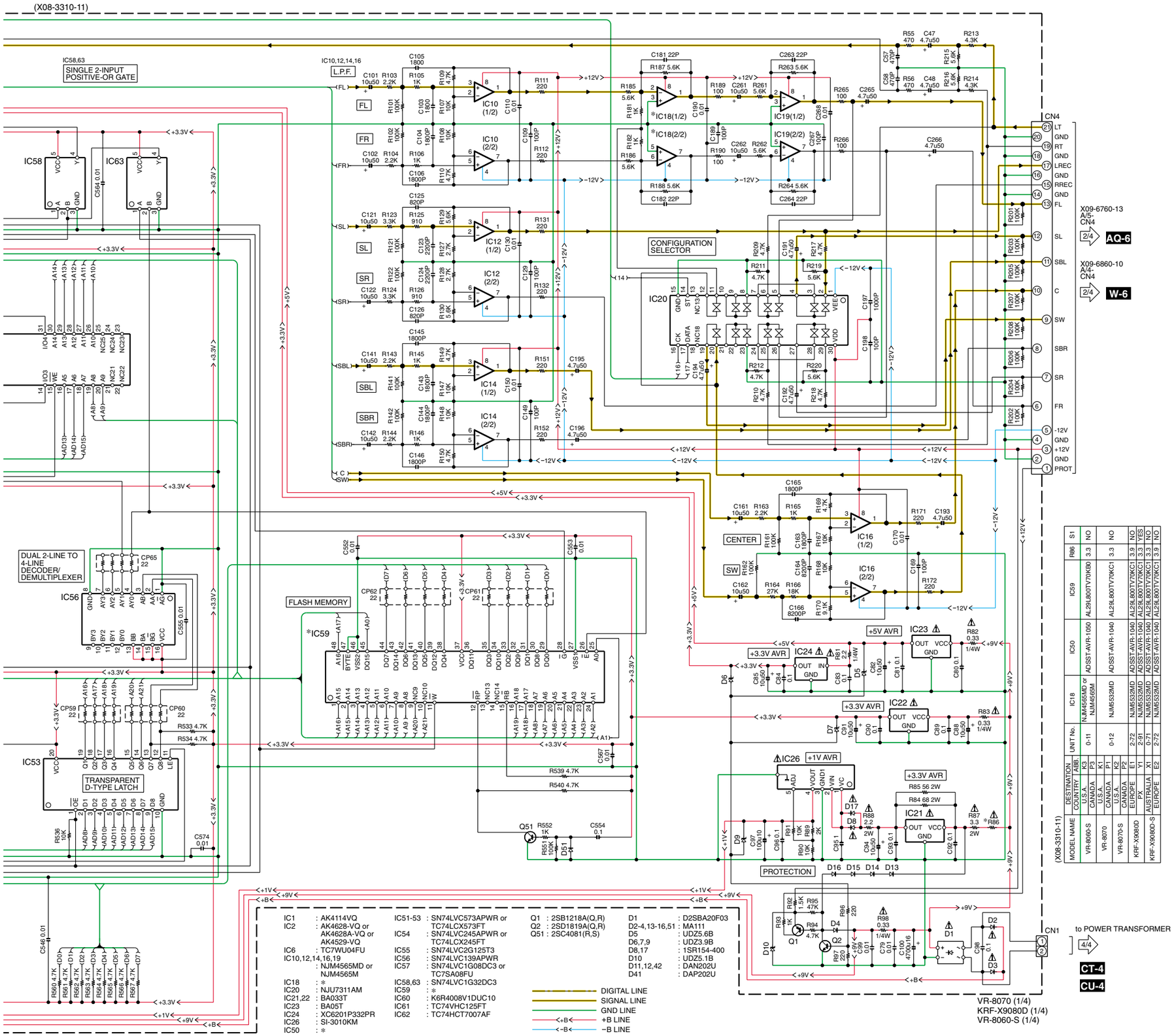

MODEL NAME		S1	R86	IC59	IC50	IC18	UNIT No.
(X08-3310-11)	DESTINATION	ABS					
VR-8060-S	COUNTRY: U.S.A.	P3	3.3	AL29L800TV70K80	ADSST-AVR-1050	NJM4565MD or NJM4565M	0-11
VR-8070	CANADA	K1	3.3	AL29L800TV70KC1	ADSST-AVR-1040	NJM5532MD	0-12
VR-8070-S	U.S.A.	P1	3.3	AL29L800TV70KC1	ADSST-AVR-1040	NJM5532MD	2-72
KRF-X9080D	CANADA	K2	NO	AL29L800TV70KC1	ADSST-AVR-1040	NJM5532MD	2-72
	EUROPE	P2	3.9	AL29L800TV70KC1	ADSST-AVR-1040	NJM5532MD	2-72
	RUSSIA	E1	NO	AL29L800TV70KC1	ADSST-AVR-1040	NJM5532MD	2-72
KRF-X9080D-S	AUSTRALIA	X1	3.3	AL29L800TV70KC1	ADSST-AVR-1040	NJM5532MD	2-72
	EUROPE	E2	NO	AL29L800TV70KC1	ADSST-AVR-1040	NJM5532MD	2-72

CAUTION: For continued safety, replace safety critical components only with manufacturer's recommended parts (refer to parts list). ⚠ indicates safety critical components. For continued protection against risk of fire, replace only with same type and rating fuse(s). To reduce the risk of electric shock, leakage-current or resistance measurements shall be carried out (exposed parts are acceptably insulated from the supply circuit) before the appliance is returned to the customer.

The DC voltage is an actual reading measured with a high impedance type voltmeter with no signal input. The measurement value may vary depending on the measuring instruments used or on the product.

KRF-X9080D/VR-8070/8060

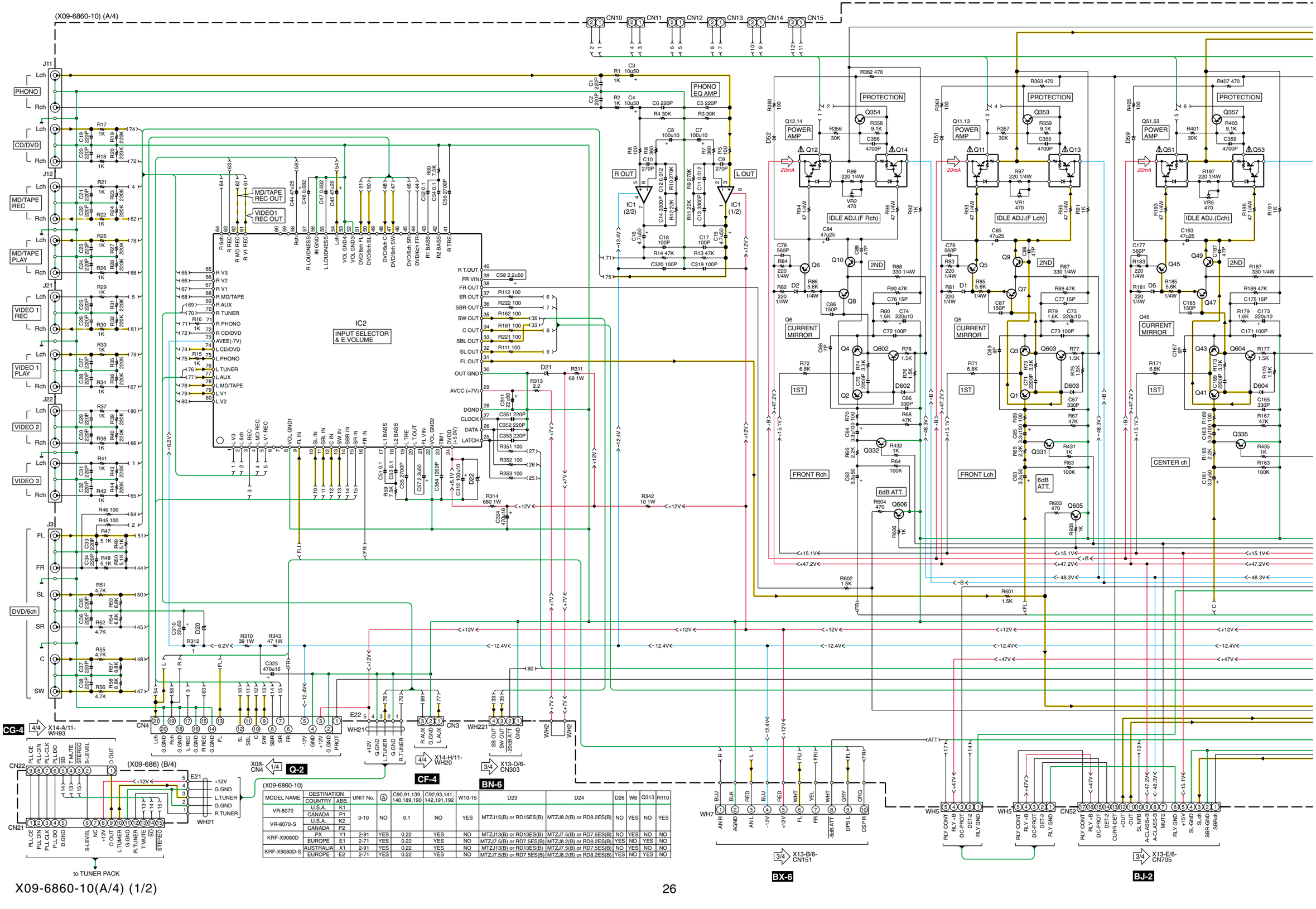

(X09-6860-10)

MODEL NAME	DESTINATION COUNTRY	DESTINATION ABB.	UNIT No.	Ⓐ	C90,91,139, 140,189,190	C92,93,141, 142,191,192	W10-15	D23	D24	D26	W8	Q313	R110
VR-8070	U.S.A.	K1	0-10	NO	0.1	NO	YES	MTZJ15(B) or RD15ES(B)	MTZJ8.2(B) or RD8.2ES(B)	NO	YES	NO	YES
	CANADA	P1											
VR-8070-S	U.S.A.	K2											
	CANADA	P2											
KRF-X9080D	PX	Y1	2-91	YES	0.22	YES	NO	MTZJ13(B) or RD13ES(B)	MTZJ7.5(B) or RD7.5ES(B)	NO	YES	NO	NO
	EUROPE	E1	2-71	YES	0.22	YES	NO	MTZJ7.5(B) or RD7.5ES(B)	MTZJ8.2(B) or RD8.2ES(B)	YES	NO	YES	NO
KRF-X9080D-S	AUSTRALIA	X1	2-91	YES	0.22	YES	NO	MTZJ13(B) or RD13ES(B)	MTZJ7.5(B) or RD7.5ES(B)	NO	YES	NO	NO
	EUROPE	E2	2-71	YES	0.22	YES	NO	MTZJ7.5(B) or RD7.5ES(B)	MTZJ8.2(B) or RD8.2ES(B)	YES	NO	YES	NO

KRF-X9080D/VR-8070/8060

(X09-6860-10) (A/4)

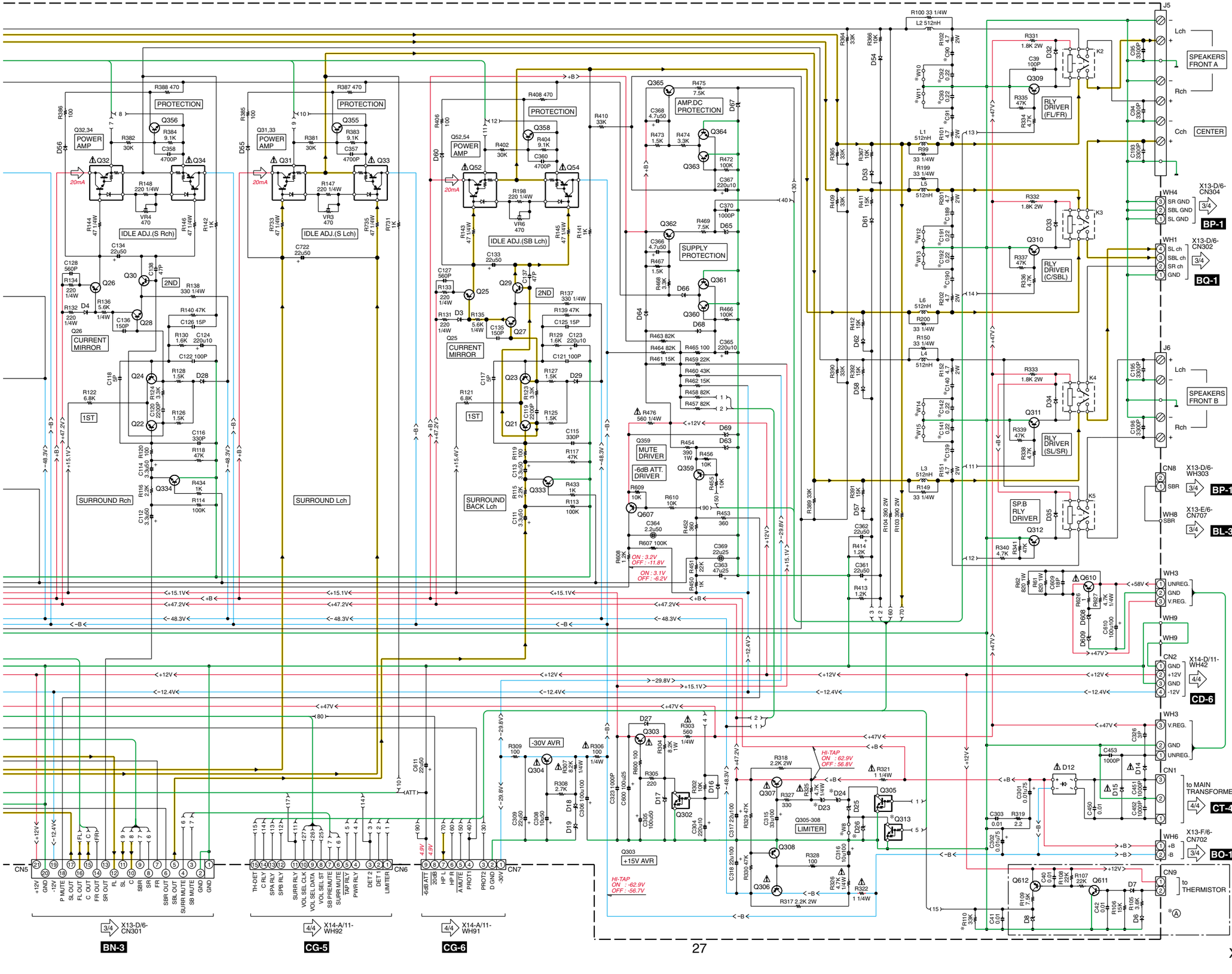

CAUTION: For continued safety, replace safety critical components only with manufacturer's recommended parts (refer to parts list). ⚠ indicates safety critical components. For continued protection against risk of fire, replace only with same type and rating fuse(s). To reduce the risk of electric shock, leakage-current or resistance measurements shall be carried out (exposed parts are acceptably insulated from the supply circuit) before the appliance is returned to the customer.

The DC voltage is an actual reading measured with a high impedance type voltmeter with no signal input. The measurement value may vary depending on the measuring instruments used or on the product.

(X09-686) (D/4)

IC1 : NJM4580L
IC2 : M61516FP

Q1-4,21-24,41,43,308,359, 362,365,607 : 2SA992(F,E)
Q5,6,25,26,45 : 2SA1123(R,S)
Q7-10,27-30,47,49 : 2SC2631(R,S)
Q11,12,31,32,51,52 : TRAIT3N
Q13,14,33,34,53,54 : TRAIT3P
Q302 : UN4219 or DTC113ZSA
Q303 : 2SC3940A(R,S)
Q304,306 : 2SB1640
Q305,313 : UN421N
Q307 : 2SD2525
Q309-312 : KTC3200
Q331-335,605,606 : 2SC2878(B)
Q353-358,360,361,363,364, 602-604 : 2SC1845(F,E)
Q610 : 2SD2012
Q611 : 2SC1740S(Q,R) or KTC3199(Y,GR)
Q612 : 2SA933AS(Q,R) or KTA1267(Y,GR)

D1-6,16,28,29,32-35,53,54,57,58, 61,62,64,66,68,602-604 : 1SS133 or HSS104A
D7,22 : MTZJ5.1(B) RD5.1ES(B)
D8,26,63,65,67,69 : MTZJ3.9(B) RD3.9ES(B)
D12 : TS6P03G-B or DSBA20F03
D14,15 : S5688B
D17,19 : MTZJ16(B) or RD16ES(B)
D18 : MTZJ15(B) or RD15ES(B)
D20 : MTZJ6.2(B) or RD6.2ES(B)
D21 : MTZJ6.8(B) or RD6.8ES(B)
D23 : *
D24 : *
D25,608 : MTZJ30(B) or RD30ES(B)
D27,51,52,55,56,59,60 : 1SS244
D609 : MTZJ20(B) or RD20ES(B)

RECORDING LINE
SIGNAL LINE
GND LINE
+B LINE
−B LINE

VR-8070 (2/4)
KRF-X9080D (2/4)

KRF-X9080D/VR-8070/8060

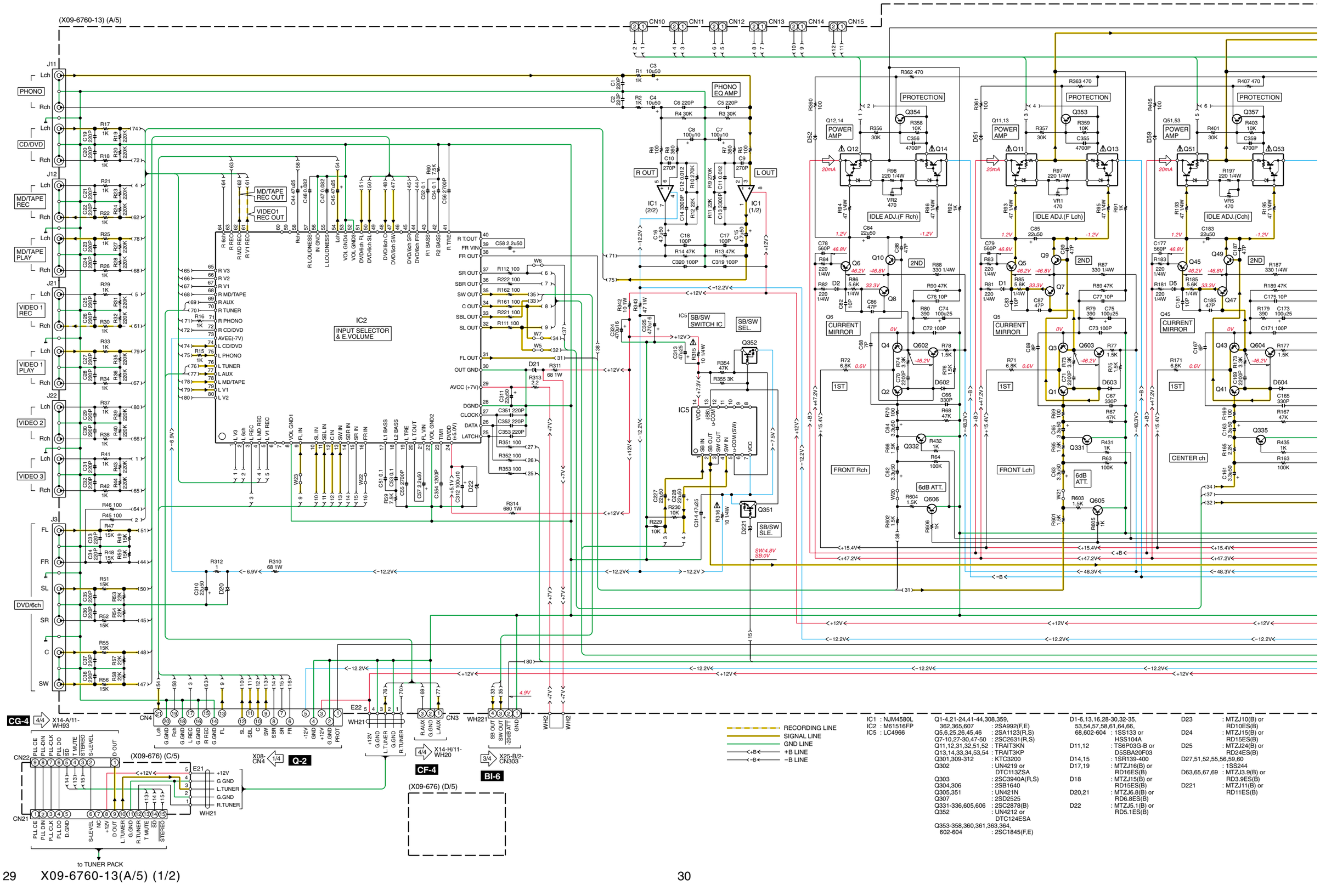

IC1 : NJM4580L
IC2 : M61516FP
IC5 : LC4966

Q1-4,21-24,41-44,308,359, 362,365,607 : 2SA992(F,E)
Q5,6,25,26,45,46 : 2SA1123(R,S)
Q7-10,27-30,47-50 : 2SC2631(R,S)
Q11,12,31,32,51,52 : TRAIT3KN
Q13,14,33,34,53,54 : TRAIT3KP
Q301,309-312 : KTC3200
Q302 : UN4219 or DTC113ZSA
Q303 : 2SC3940A(R,S)
Q304,306 : 2SB1640
Q305,351 : UN421N
Q307 : 2SD2525
Q331-336,605,606 : 2SC2878(B)
Q352 : UN4212 or DTC124ESA
Q353-358,360,361,363,364, 602-604 : 2SC1845(F,E)

D1-6,13,16,28-30,32-35, 53,54,57,58,61,64,66, 68,602-604 : 1SS133 or HSS104A
D11,12 : TS6P03G-B or D5SBA20F03
D14,15 : 1SR139-400
D17,19 : MTZJ16(B) or RD16ES(B)
D18 : MTZJ15(B) or RD15ES(B)
D20,21 : MTZJ6.8(B) or RD6.8ES(B)
D22 : MTZJ5.1(B) or RD5.1ES(B)
D23 : MTZJ10(B) or RD10ES(B)
D24 : MTZJ15(B) or RD15ES(B)
D25 : MTZJ24(B) or RD24ES(B)
D27,51,52,55,56,59,60 : 1SS244
D63,65,67,69 : MTZJ3.9(B) or RD3.9ES(B)
D221 : MTZJ11(B) or RD11ES(B)

KRF-X9080D/VR-8070/8060

(X09-6760-13) (A/5)

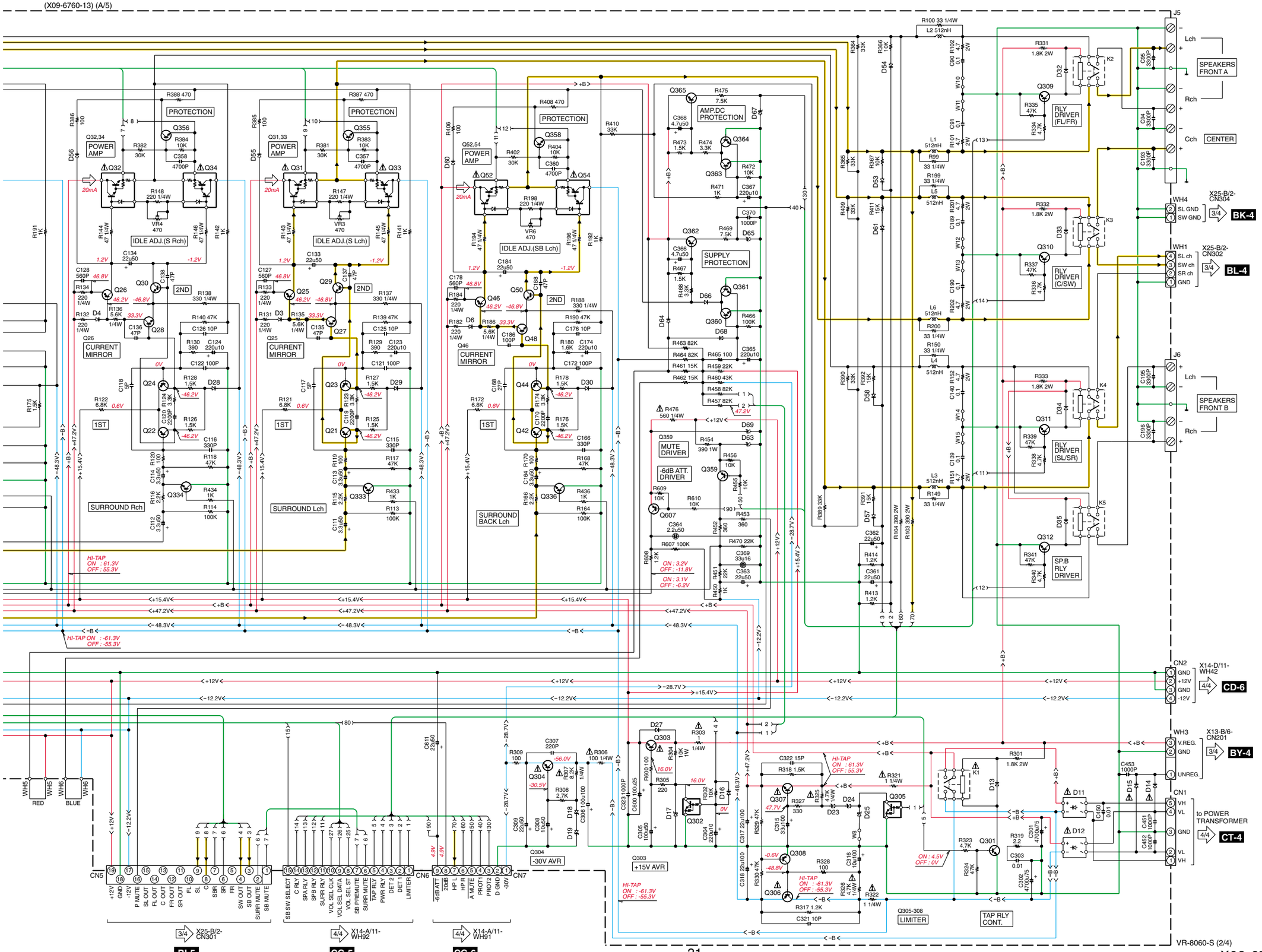

CAUTION: For continued safety, replace safety critical components only with manufacturer's recommended parts (refer to parts list). ⚠ indicates safety critical components. For continued protection against risk of fire, replace only with same type and rating fuse(s). To reduce the risk of electric shock, leakage-current or resistance measurements shall be carried out (exposed parts are acceptably insulated from the supply circuit) before the appliance is returned to the customer.

The DC voltage is an actual reading measured with a high impedance type voltmeter with no signal input. The measurement value may vary depending on the measuring instruments used or on the product.

VR-8060-S (2/4)

KRF-X9080D/VR-8070/8060

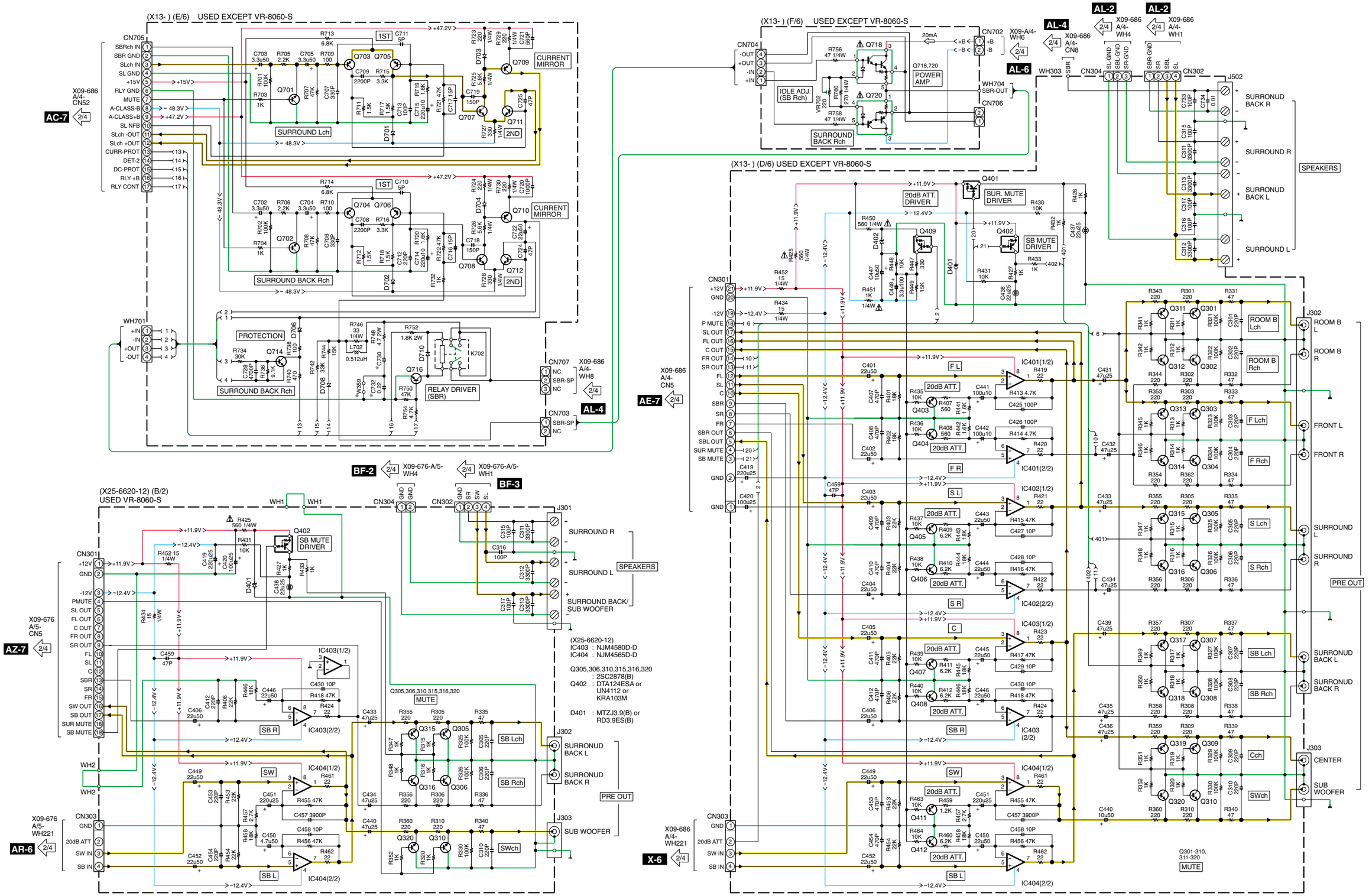

KRF-X9080D/VR-8070/8060

(X13-7940-10) (A/6)

(X13-) (C/6)

(X13-) (B/6)

IC65 S-VIDEO & VIDEO SELECTOR

IC66 VIDEO SWITCH

IC69 6dB & 75Ω DRIVER

IC68 6dB & 75Ω DRIVER

IC508 75Ω DRIVER

IC11 (BOTTOM VIEW)

VIDEO SWITCH & AMP

IC3 DIGITAL/ANALOG SIGNAL SWITCH

IC6 (1/2)

IC6 (2/2)

IC507 (1/2)

IC507 (2/2)

IC201 +5V AVR

+5V AVR CCTS.

-5V AVR CCTS.

CF-4 CD-6 CG-3 BF-6 CK-1 Z-7

(X13-7940-10)

MODEL NAME	DESTINATION COUNTRY	ABB.	UNIT No.	Ⓐ Ⓒ	Ⓑ	Ⓓ	C694	C730	C732	L502	L503, L504	W359
VR-8070	U.S.A.	K1	0-11	YES	YES	NO	YES	0.1	NO	YES	NO	YES
	CANADA	P1										
VR-8070-S	U.S.A.	K2										
	CANADA	P2										
KRF-X9080D	PX	Y1	2-91	YES	NO	NO	NO	0.22	YES	NO	YES	NO
	EUROPE	E1	2-71	YES	NO	NO	NO	0.22	YES	NO	YES	NO
KRF-X9080D-S	AUSTRALIA	X1	0-71	YES	NO	NO	NO	0.22	YES	NO	YES	NO
	EUROPE	E2	2-71	YES	NO	NO	NO	0.22	YES	NO	YES	NO
VR-8060-S	U.S.A.	K3	0-10	NO	NO	YES	YES	NO	NO	YES	NO	NO
	CANADA	P3										

(X13-7940-10)

IC3	: BU4066BC	Q65	: 2SD2525
IC6,401-404	: NJM4580D-D	Q66	: 2SB1640
IC11	: NJM2585M	Q101	: 2SC2003(L,K)
IC65	: LA79510M	Q158,159,201	: KRC103M or DTC124ESA or UN4212
IC66	: NJM2284V	Q202,203	: 2SC1740S(Q,R) or KTC3199(Y,GR) or 2SC2785(F,E)
IC68,69	: NJM2575	Q204	: 2SA933AS(Q,R) or KTA1267(Y,GR) or 2SA1175(F,E)
IC201	: BA05T	Q299	: 2SD2012
IC507	: NJM4565MD	Q301-320,403-408,411, 412,701,702	: 2SC2878(B)
IC508	: BA7623F	Q401,402,409	: KRA103M or DTA124ESA or UN4112
		Q501,502	: 2SC4213(B)
		Q512	: 2SD1819A(Q,R) or 2SC4081(R,S)
		Q703-706	: 2SA992(F,E)
		Q707,708,711,712	: 2SC2631
		Q709,710	: 2SA1123(R,S)
		Q714	: 2SC1845(F,E)
		Q716	: KTC3200
		Q718	: TRAIT8N※5
		Q720	: TRAIT8P※5
		D101	: MTZJ10(B) or RD10ES(B)
		D155-157	: MTZJ7.5(B) or RD7.5JS(B)
		D201-206,652,701-704, 708,710	: 1SS133 or HSS104A
		D291	: MTZJ20(B) or RD20ES(B)
		D292	: MTZJ30(B) or RD30ES(B)
		D401	: MTZJ3.9(B) or RD3.9ES(B)
		D402	: MTZJ5.1(B) or RD5.1ES(B)
		D503	: DA204U or 1SS302
		D655,656	: MTZJ5.6(B) or RD5.6ES(B)
		D706	: 1SS244

RECORDING LINE
SIGNAL LINE
GND LINE
+B LINE
−B LINE

KRF-X9080D (3/4)
VR-8070 (3/4)
VR-8060-S (3/4)

CAUTION: For continued safety, replace safety critical components only with manufacturer's recommended parts (refer to parts list). ⚠ indicates safety critical components. For continued protection against risk of fire, replace only with same type and rating fuse(s). To reduce the risk of electric shock, leakage-current or resistance measurements shall be carried out (exposed parts are acceptably insulated from the supply circuit) before the appliance is returned to the customer.

The DC voltage is an actual reading measured with a high impedance type voltmeter with no signal input. The measurement value may vary depending on the measuring instruments used or on the product.

KRF-X9080D/VR-8070/8060

IC45	: BA05T	D401	: D2SBA20F03
		D451,452,454,501-504, 791,801-806,842,844, 846,961-964	: 1SS133
IC74	: BU2090	D453	: S1ZB20(4101)
IC78	: LC75711NED	D455,841,843	: RB721Q
IC79	: XC6202P502PR		
IC81	: BU1923	D734,753	: B30-2545-05
IC83,84	: S-80840CNY	D741-745,755	: *
IC90	: *	D746-752	: B30-2651-05 or B30-2567-05
IC401	: KIA7812API		
IC402	: KIA7912PI	D754	: B30-2651-05 or B30-2567-05
Q451,776,841 : 2SC1740S(Q,R) or 2SC2785(F,E) or KTC3199(Y,GR)		D776	: MTZJ5.1(B) or RD5.1ES(B)
Q731,843	: DTC113ZSA or UN4219		
Q777,778	: DTC124ESA or UN4212 or KRC103M	TH1	: MF-R090
Q842	: 2SA933AS(Q,R) or 2SA1175(F,E) or KTA1267(Y,GR)		

KRF-X9080D/VR-8070/8060

(X14-7780-10) (A/11)

ED78

1G

L C SW R

LFE

SL S SB SR

SP A B

MUTE CLIP

OPTICAL COAXIAL | 6CH INPUT ANALOG | AUTO DETECT 96kHz/s | CINEMA EQ. ACTIVE EQ. DSP MODE | DTS MATRIX DISCRETE | DOLBY DIGITAL PRO LOGIC | STEREO LOUDNESS | NEO : 6 CSII | THX Surround EX | RDS PTY AUTO MEMORY STEREO TUNED

1G 16G 15G 14G 13G 12G 11G 10G 9G 8G 7G 6G 5G 4G 3G 2G 1G

IR REMOCON A791

AD KEY GET 3: MUTE S716 | SOUND S718 | TONE S719 | AV AUX S717 | SETUP S720 | BAND S721 | AUTO S722 | MEMORY S723 | UP S724 | DOWN S725

AD KEY GET 4

RDS DEMODULATOR IC81

IC78 VFD DISPLAY CONT.DRIVER

FIRST-OFF2 CCT. D831 IC83

AD KEY GET 1: DVD/6CH S701 | CD/DVD S702 | PHONO S703 | TUNER S704 | VIDEO1 S705 | VIDEO2 S706 | VIDEO3 S707 | MD/TAPE S708

AD KEY GET 2: THX or ACTIVE EQ S709 | SPEAKER EQ S710 | ACTIVE EQ or LOUDNESS S711 | DSP S712 | STEREO S713 | INPUT MODE S714 | DIMMER S715

LISTEN MODE S761 | MULTI CONTROL S762

GRID BUFFER Q776 | LED CONT. Q777,778 | DSP or LOUDNESS Q777 | ACTIVE EQ Q778

LED DRIVER IC74 (BOTTOM VIEW)

FIRST OFF1 | RESET IC IC84 | RESET Q841 | IC79 5V AVR

WH78: FLAC, FLAC, X08 MVDD, POWER RLY, 5V MINI, D GND, FAST OFF1

EXCEPT (Y) TYPE POWER TRANSFORMER

X08-CN1 Q-7 1/4 | X09-676 A/5-CN1 2/4 | X09-686 A/4-CN1

BF-6 AL-6

(X14-) (J/11)

CN1 | W141

(X14-) (I/11)

J2 J3 J5 | W960 | F1 T4A L 250V | F2 T1A L 250V | K451 | RLY CONT. | D454 7.2V | Q451

CN49: FLAC, FLAC | CN50: FLAC, FLAC, X08 MVDD, POWER RLY, 5V MINI, D GND, FAST OFF1

+5.5V AVR IC45 | T1

KRF-X9080D/VR-8070/8060

ANODE CONNECTION

	1G	2G	3G	4G	5G	6-14G	15G	16G
P1	L	1-1	1-1	1-1	1-1	1-1	1-1	1-1
P2	C	2-1	2-1	2-1	2-1	2-1	2-1	2-1
P3	R	3-1	3-1	3-1	3-1	3-1	3-1	3-1
P4	SR	4-1	4-1	4-1	4-1	4-1	4-1	4-1
P5	SB	5-1	5-1	5-1	5-1	5-1	5-1	5-1
P6	SL	1-2	1-2	1-2	1-2	1-2	1-2	1-2
P7	S	2-2	2-2	2-2	2-2	2-2	2-2	2-2
P8	SW	3-2	3-2	3-2	3-2	3-2	3-2	3-2
P9	LFE	4-2	4-2	4-2	4-2	4-2	4-2	4-2
P10	(L)	5-2	5-2	5-2	5-2	5-2	5-2	5-2
P11	(C)	1-3	1-3	1-3	1-3	1-3	1-3	1-3
P12	(R)	2-3	2-3	2-3	2-3	2-3	2-3	2-3
P13	(SR)	3-3	3-3	3-3	3-3	3-3	3-3	3-3
P14	(SBR)	4-3	4-3	4-3	4-3	4-3	4-3	4-3
P15	(SBL)	5-3	5-3	5-3	5-3	5-3	5-3	5-3
P16	(SL)	1-4	1-4	1-4	1-4	1-4	1-4	1-4
P17	(SW)	2-4	2-4	2-4	2-4	2-4	2-4	2-4
P18	OPTICAL	3-4	3-4	3-4	3-4	3-4	3-4	3-4
P19	COAXIAL	4-4	4-4	4-4	4-4	4-4	4-4	4-4
P20	6CH INPUT	5-4	5-4	5-4	5-4	5-4	5-4	5-4
P21	ANALOG	1-5	1-5	1-5	1-5	1-5	1-5	1-5
P22	AUTO DETECT	2-5	2-5	2-5	2-5	2-5	2-5	2-5
P23	96kHz/s	3-5	3-5	3-5	3-5	3-5	3-5	3-5
P24	CINEMA EQ.	4-5	4-5	4-5	4-5	4-5	4-5	4-5
P25	ACTIVE EQ.	5-5	5-5	5-5	5-5	5-5	5-5	5-5
P26	DSP MODE	1-6	1-6	1-6	1-6	1-6	1-6	1-6
P27	DTS	2-6	2-6	2-6	2-6	2-6	2-6	2-6
P28	MATRIX	3-6	3-6	3-6	3-6	3-6	3-6	3-6
P29	DISCRETE	4-6	4-6	4-6	4-6	4-6	4-6	4-6
P30	DOLBY DIGITAL	5-6	5-6	5-6	5-6	5-6	5-6	5-6
P31	PRO LOGIC	1-7	1-7	1-7	1-7	1-7	1-7	1-7
P32		2-7	2-7	2-7	2-7	2-7	2-7	2-7
P33	RDS	3-7	3-7	3-7	3-7	3-7	3-7	3-7
P34	PTY	4-7	4-7	4-7	4-7	4-7	4-7	4-7
P35	AUTO	5-7	5-7	5-7	5-7	5-7	5-7	5-7
P36	MEMORY	—	THX	NEO:6	LOUDNESS	—	MUTE	SP
P37	STEREO	—	Surround EX	CSII	STEREO	—	CLIP	A
P38	TUNED	—	—	—	—	—	—	B

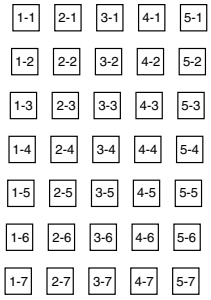

CAUTION: For continued safety, replace safety critical components only with manufacturer's recommended parts (refer to parts list). ⚠ indicates safety critical components. For continued protection against risk of fire, replace only with same type and rating fuse(s). To reduce the risk of electric shock, leakage-current or resistance measurements shall be carried out (exposed parts are acceptably insulated from the supply circuit) before the appliance is returned to the customer.

The DC voltage is an actual reading measured with a high impedance type voltmeter with no signal input. The measurement value may vary depending on the measuring instruments used or on the product.

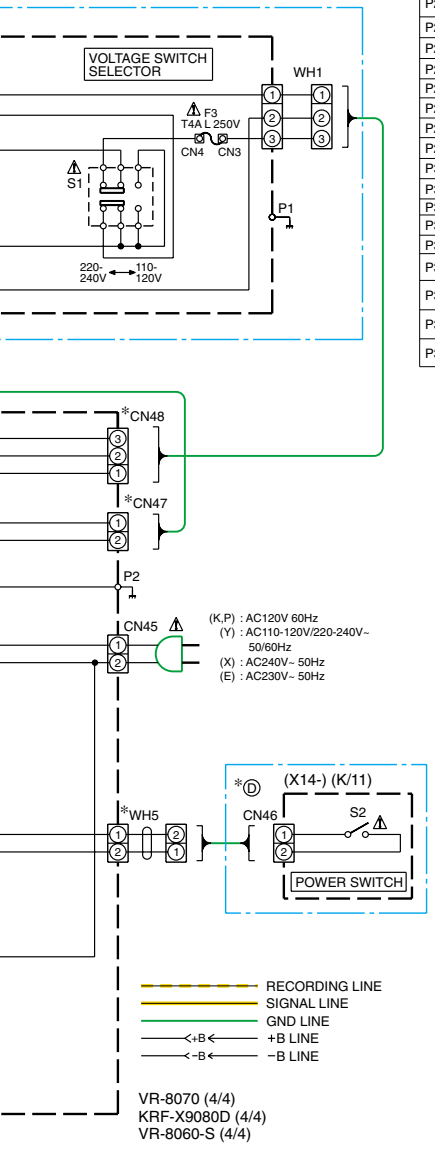

(X14-7780-10)

MODEL NAME	DESTINATION COUNTRY	DESTINATION ABB.	UNIT No.	Ⓐ	ⒷⒺ	Ⓓ	C105	C452	C453	C455, 909	C841	C842	CN21, 22	CN47	CN48	D741-745, 755
VR-8060-S	U.S.A.	K3	0-10	NO	NO	NO	NO	0.1	3300u16	NO	YES	NO	NO	YES	NO	B30-2545-05
	CANADA	P3														
VR-8070	U.S.A.	K1	0-11	NO	NO	NO	NO	0.1	3300u16	NO	YES	NO	NO	YES	NO	B30-2545-05
	CANADA	P1														
VR-8070-S	U.S.A.	K2														
	CANADA	P2														
KRF-X9080D	EUROPE	E1	2-71	YES	NO	YES	YES	0.039	3300u25	NO	NO	YES	YES	YES	NO	B30-2651-05
	PX	Y1	2-91	NO	YES	YES	NO	0.068	3300u25	YES	NO	YES	YES	NO	YES	B30-2545-05
KRF-X9080D-S	AUSTRALIA	X1	0-71	NO	NO	YES	NO	0.047	3300u25	NO	NO	YES	YES	YES	NO	B30-2545-05
	EUROPE	E2	2-71	YES	NO	YES	YES	0.039	3300u25	NO	NO	YES	YES	YES	NO	B30-2651-05

(X14-7780-10)

MODEL NAME	DESTINATION COUNTRY	DESTINATION ABB.	UNIT No.	F1	F2	IC90	J2	J3	J5	K451	P1	R121	R451	R454	R457
VR-8060-S	U.S.A.	K3	0-10	125V 10A	NO	MN101C49HNJ2	YES	NO	NO	S76-0107-05	NO	NO	39K	27	YES
	CANADA	P3													
VR-8070	U.S.A.	K1	0-11	125V 10A	NO	MN101C49HNK	YES	NO	NO	S76-0107-05	NO	YES	39K	27	YES
	CANADA	P1													
VR-8070-S	U.S.A.	K2													
	CANADA	P2													
KRF-X9080D	EUROPE	E1	2-71	250V T4A L	YES	MN101C49HNK	NO	YES	NO	S76-0110-05	NO	YES	130K	27	NO
	PX	Y1	2-91	250V T4A L	YES	MN101C49HNK	YES	NO	NO	S76-0110-05	YES	YES	18K	15	NO
KRF-X9080D-S	AUSTRALIA	X1	0-71	250V T4A L	YES	MN101C49HNK	NO	NO	YES	S76-0110-05	NO	YES	150K	27	NO
	EUROPE	E2	2-71	250V T4A L	YES	MN101C49HNK	NO	YES	NO	S76-0110-05	NO	YES	130K	27	NO

(X14-7780-10)

MODEL NAME	DESTINATION COUNTRY	DESTINATION ABB.	UNIT No.	R458, 836	R831, 835,906	R882	R902	R914	R977	T1	W104	W121	W960	WH5	WH86
VR-8060-S	U.S.A.	K3	0-10	NO	NO	NO	NO	NO	NO	L07-2809-05	YES	YES	YES	NO	NO
	CANADA	P3													
VR-8070	U.S.A.	K1	0-11	NO	NO	YES	NO	NO	NO	L07-2809-05	YES	YES	YES	NO	NO
	CANADA	P1													
VR-8070-S	U.S.A.	K2													
	CANADA	P2													
KRF-X9080D	EUROPE	E1	2-71	NO	NO	NO	YES	YES	27K	L07-2761-05	YES	NO	NO	YES	YES
	PX	Y1	2-91	YES	YES	NO	YES	NO	12K	L07-2805-05	NO	NO	NO	YES	NO
KRF-X9080D-S	AUSTRALIA	X1	0-71	NO	YES	NO	YES	NO	4.7K	L07-2758-05	YES	NO	NO	YES	NO
	EUROPE	E2	2-71	NO	NO	NO	YES	YES	27K	L07-2761-05	YES	NO	NO	YES	YES

EXPLODED VIEW (UNIT)

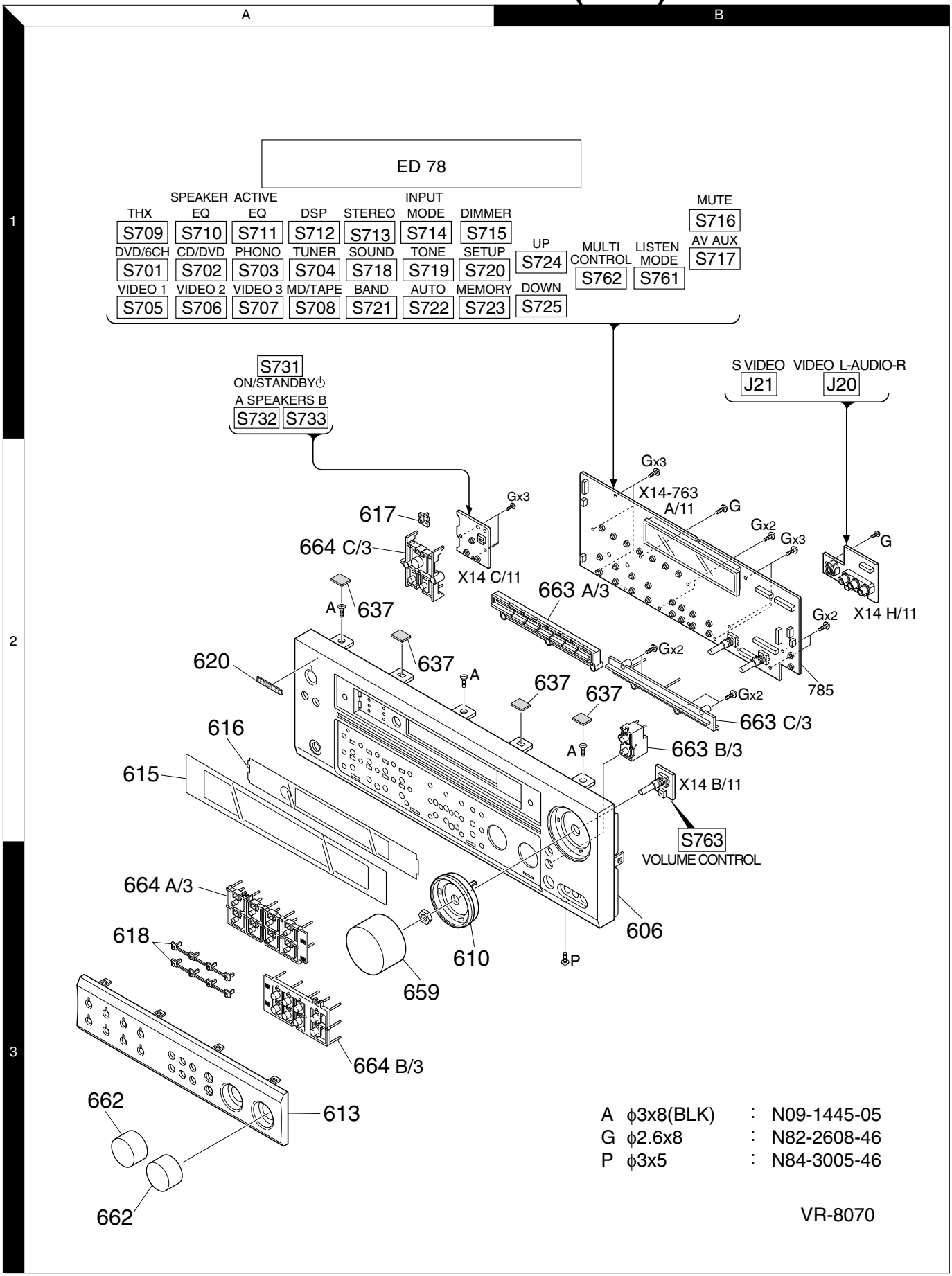

Parts with exploded numbers larger than 700 are not supplied.

KRF-X9080D/VR-8070/8060

EXPLODED VIEW (UNIT)

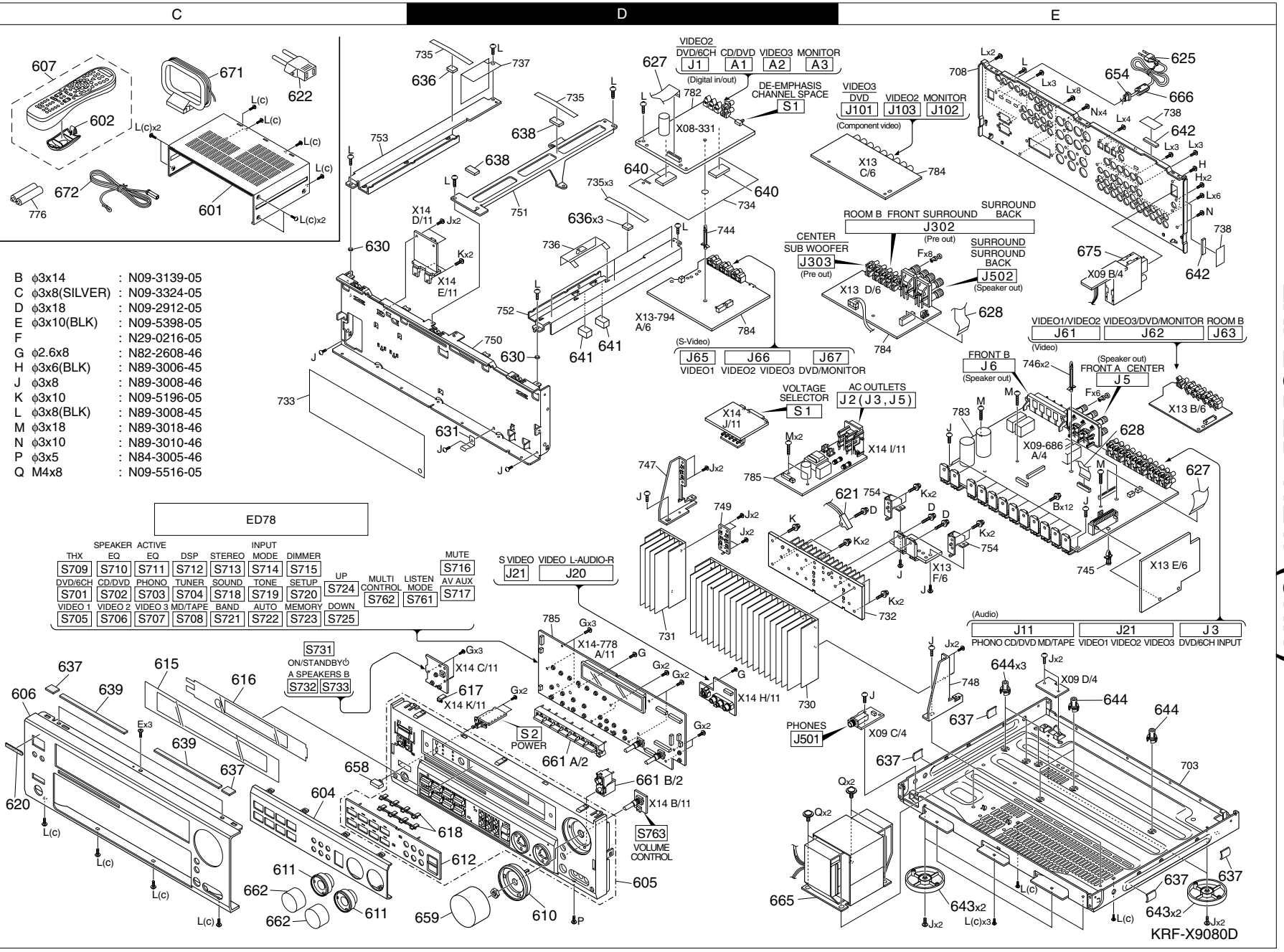

B	ϕ3x14	:	N09-3139-05
C	ϕ3x8(SILVER)	:	N09-3324-05
D	ϕ3x18	:	N09-2912-05
E	ϕ3x10(BLK)	:	N09-5398-05
F		:	N29-0216-05
G	ϕ2.6x8	:	N82-2608-46
H	ϕ3x6(BLK)	:	N89-3006-45
J	ϕ3x8	:	N89-3008-46
K	ϕ3x10	:	N09-5196-05
L	ϕ3x8(BLK)	:	N89-3008-45
M	ϕ3x18	:	N89-3018-46
N	ϕ3x10	:	N89-3010-46
P	ϕ3x5	:	N84-3005-46
Q	M4x8	:	N09-5516-05

Parts with exploded numbers larger than 700 are not supplied.

✻ New Parts
Parts without **Parts No.** are not supplied.
Les articles non mentionnes dans le **Parts No.** ne sont pas fournis.
Teile ohne **Parts No.** werden nicht geliefert.

❶

Ref. No	Address	New Parts	Parts No.	Description	Destination	Remarks
KRF-X9080D/VR-8070/VR-8060						
601	1C	✻	A01-3935-01	METALLIC CABINET	K1P1	
601	1C	✻	A01-3936-01	METALLIC CABINET	7K2P2	
601	1C	✻	A01-3937-01	METALLIC CABINET	Y1E1	
601	1C	✻	A01-3938-01	METALLIC CABINET	X1E2	
602	1C		A09-1274-08	BATTERY COVER		
604	2C		A21-3982-12	DRESSING PANEL	Y1E1	
604	2C		A21-3983-12	DRESSING PANEL	X1E2	
605	2D		A22-1873-01	SUB PANEL ASSY	Y1E1	
605	2D		A22-1874-01	SUB PANEL ASSY	X1E2	
606	2B	✻	A60-2378-01	PANEL	7	
606	2B	✻	A60-2383-11	PANEL	K1P1	
606	2B	✻	A60-2384-11	PANEL	K2P2	
606	2C	✻	A60-2408-02	PANEL	Y1E1	
606	2C	✻	A60-2409-02	PANEL	X1E2	
607	1C		A70-1620-05	REMOTE CONTROLLER ASSY	Y1X1	
607	1C		A70-1621-05	REMOTE CONTROLLER ASSY	E1E2	
607	1C		A70-1622-05	REMOTE CONTROLLER ASSY	7	
607	1C	✻	A70-1659-05	REMOTE CONTROLLER ASSY	9	
-		✻	B60-5453-00	INST. MANUAL (EN)	9	
-		✻	B60-5454-00	INST. MANUAL EN,FR,GE,NE,IT,ES E1E2		
-		✻	B60-5455-00	INST. MANUAL (EN)	Y1X1	
-		✻	B60-5457-00	INST. MANUAL (FR)	P1P2	
-		✻	B60-5470-00	INST. MANUAL (EN)	7	
-		✻	B60-5471-00	INST. MANUAL (FR)	P3	
-		✻	B60-5472-00	INST. MANUAL (TC)	Y1	
610	2D		B07-2606-03	ESCUTCHEON	E1	
610	3A,2D		B07-2606-03	ESCUTCHEON	K1P1Y1	
610	2D		B07-2607-03	ESCUTCHEON	X1E2	
610	3A		B07-2607-03	ESCUTCHEON	7K2P2	
611	2C		B07-2608-03	ESCUTCHEON	Y1E1	
611	2C		B07-2609-03	ESCUTCHEON	X1E2	
612	2D		B07-2619-13	ESCUTCHEON	Y1E1	
612	2D		B07-2620-13	ESCUTCHEON	X1E2	
613	3A		B07-2689-01	ESCUTCHEON	K1P1	
613	3A	✻	B07-2690-01	ESCUTCHEON	7K2P2	
615	2A	✻	B10-5508-02	FRONT GLASS	K2P2	
615	2A	✻	B10-5509-02	FRONT GLASS	K11P1	
615	2A	✻	B10-5510-02	FRONT GLASS	7	
615	2C	✻	B10-5513-02	FRONT GLASS	E1	
615	2C	✻	B10-5525-02	FRONT GLASS	E2	
615	2C	✻	B10-5528-02	FRONT GLASS	X1	
615	2C	✻	B10-5529-02	FRONT GLASS	Y1	
616	2A		B11-1598-03	COLOR FILTER	7	
616	2A,2C	✻	B11-1600-03	COLOR FILTER	89	
617	2D		B12-0440-04	INDICATOR	8	
617	2A		B12-0484-14	INDICATOR	79	
618	2D		B12-0442-04	INDICATOR	8	
618	3A		B12-0486-03	INDICATOR	79	
620	2A,2C		B43-0336-04	BADGE		
⚠ 622	1C		E03-0508-05	AC PLUG ADAPTER	Y1	
⚠ 625	1E		E30-2717-05	AC POWER CORD	X1	
⚠ 625	1E		E30-2941-05	AC POWER CORD	79	

L : Scandinavia **K :** USA **P :** Canada **R :** Mexico **C :** China **I :** Malaysia
Y : PX(Far East,Hawaii) **T :** England **E :** Europe **G :** Germany **V :** China(Shanghai)
Y : AAFES(Europe) **X :** Australia **Q :** Russia **H :** Korea **M :** Other Areas ⚠ indicates safety critical components .

✻ New Parts
Parts without **Parts No.** are not supplied.
Les articles non mentionnes dans le **Parts No.** ne sont pas fournis.
Teile ohne **Parts No.** werden nicht geliefert.

❷

Ref. No	Address	New Parts	Parts No.	Description	Destination	Remarks
⚠ 625	1E		E30-2942-05	AC POWER CORD	E1E2	
⚠ 625	1E	✻	E30-7312-05	AC POWER CORD	Y1	
627	1D,1E		E35-3216-05	FLAT CABLE (21P,180MM)		
628	1E		E35-3675-05	FLAT CABLE (19P,220MM)	7	
628	1E	✻	E35-3694-05	FLAT CABLE (21P,220MM)	89	
630	1C,1D		F29-0134-04	INSULATING WASHER		
631	1D		G02-1748-04	FLAT SPRING	8	
636	1D		G11-2416-04	CUSHION		
637	2C,2E		G11-2885-04	CUSHION		
638	1D		G11-2886-04	CUSHION		
639	2C		G11-2887-04	CUSHION	8	
640	1D		G11-2916-04	CUSHION		
641	1D		G11-2958-04	CUSHION	89	
642	1E	✻	G11-2959-04	CUSHION	79	
-			H10-7888-02	POLYSTYRENE FOAMED FIXTURE		
-			H10-7890-02	POLYSTYRENE FOAMED FIXTURE		
-			H25-0232-04	PROTECTION BAG (235X350X0.03)		
-			H25-0391-04	PROTECTION BAG		
-		✻	H50-4912-24	ITEM CARTON CASE	K1P1	
-		✻	H50-4913-24	ITEM CARTON CASE	K2P2	
-		✻	H50-4914-04	ITEM CARTON CASE	E1	
-		✻	H50-4915-04	ITEM CARTON CASE	E2	
-		✻	H50-4916-04	ITEM CARTON CASE	X1	
-		✻	H50-4917-04	ITEM CARTON CASE	Y1	
-		✻	H50-4918-14	ITEM CARTON CASE	7	
643	2E		J02-1532-03	FOOT		
644	2E		J19-3751-04	UNIT HOLDER		
⚠ 654	1E		J42-0349-05	POWER CORD BUSHING		
658	2C		K27-2384-04	BUTTON KNOB	Y1E1	
658	2C		K27-2481-04	BUTTON KNOB	X1E2	
659	3A		K29-8104-04	KNOB	7	
659	3A,2D		K29-8267-04	KNOB	K1P1Y1	
659	3A		K29-8268-04	KNOB	K2P2	
659	2D		K29-8268-04	KNOB	X1E2	
659	2D		K29-8269-04	KNOB	E1	
661	2D		K29-8136-03	KNOB ASSY	Y1E1	
661	2D		K29-8137-03	KNOB ASSY	X1E2	
662	2C		K29-8271-04	KNOB	Y1E1	
662	2C		K29-8272-04	KNOB	X1E2	
662	3A		K29-8352-14	KNOB	K1P1	
662	3A		K29-8353-04	KNOB	7K2P2	
663	2B		K29-8358-13	KNOB ASSY	K1P1	
663	2B	✻	K29-8362-03	KNOB ASSY	7K2P2	
664	2A,3A		K29-8364-11	KNOB	K1P1	
664	2A,3A	✻	K29-8365-01	KNOB	7K2P2	
⚠ 665	2D		L07-3138-05	POWER TRANSFORMER	7	
⚠ 665	2D	✻	L07-3285-15	POWER TRANSFORMER	9	
⚠ 665	2D	✻	L07-3286-15	POWER TRANSFORMER	E1E2	
⚠ 665	2D	✻	L07-3287-15	POWER TRANSFORMER	X1	
⚠ 665	2D	✻	L07-3288-15	POWER TRANSFORMER	Y1	
666	1E		L92-0579-05	FERRITE CORE	E1E2	

L : Scandinavia **K :** USA **P :** Canada **R :** Mexico **C :** China **I :** Malaysia
Y : PX(Far East,Hawaii) **T :** England **E :** Europe **G :** Germany **V :** China(Shanghai)
Y : AAFES(Europe) **X :** Australia **Q :** Russia **H :** Korea **M :** Other Areas ⚠ indicates safety critical components .

✻ New Parts
Parts without **Parts No.** are not supplied.
Les articles non mentionnes dans le **Parts No.** ne sont pas fournis.
Teile ohne **Parts No.** werden nicht geliefert.

❸

Ref. No	Address	New Parts	Parts No.	Description			Destination	Remarks
671	1C		T90-0893-05	LOOP ANTENNA				
672	1C		T90-0877-05	LEAD WIRE ANTENNA			8	
672	1C		T90-0905-05	LEAD WIRE ANTENNA			79	
621	2E		DP40203SG270	THERMISTOR			8	
675	1E		W02-2974-15	TUNER ASSY			79	
675	1E		W02-2975-05	TUNER ASSY			Y1X1	
675	1E		W02-2976-05	TUNER ASSY			E1E2	
SURROUND (X08-3310-11)								
C1 ,2			CK73GB1H472K	CHIP C	4700PF	K		
C3 ,4			CC73GCH1H220J	CHIP C	22PF	J		
C5 ,6			CE04KW1E470M	ELECTRO	47UF	25WV		
C7			CE04KW1H100M	ELECTRO	10UF	50WV		
C8 ,9			CC73GCH1H221J	CHIP C	220PF	J		
C11			CK73GB1C104K	CHIP C	0.10UF	K		
C12			CK73GB1A474K	CHIP C	0.47UF	K		
C13 ,14			CK73GB1C104K	CHIP C	0.10UF	K		
C15			CK73GB1H102K	CHIP C	1000PF	K		
C16			CK73GB1H103K	CHIP C	0.010UF	K		
C41			CK73GB1C104K	CHIP C	0.10UF	K		
C42			CK73GB1H103K	CHIP C	0.010UF	K		
C43			CE04KW1H2R2M	ELECTRO	2.2UF	50WV		
C44 ,45			CK73GB1C104K	CHIP C	0.10UF	K		
C46			CE04KW1E470M	ELECTRO	47UF	25WV		
C47 ,48			CE04KW1H4R7M	ELECTRO	4.7UF	50WV		
C49			CE04KW1H100M	ELECTRO	10UF	50WV		
C50 ,51			CK73GB1H103K	CHIP C	0.010UF	K		
C57 ,58			CC73GSL1H471J	CHIP C	470PF	J		
C61 ,62			CC73GCH1H080D	CHIP C	8.0PF	D		
C63			CK73GB1H102K	CHIP C	1000PF	K		
C64			CK73GB1C563K	CHIP C	0.056UF	K		
C65			CE04KW1E470M	ELECTRO	47UF	25WV		
C66			CC73GCH1H220J	CHIP C	22PF	J		
C79			CK73FB1H103K	CHIP C	0.010UF	K		
C80			CK73FB1E104K	CHIP C	0.10UF	K		
C81			CK73GB1C104K	CHIP C	0.10UF	K		
C82			CE04KW1H100M	ELECTRO	10UF	50WV		
C83 ,84			CK73GB1C104K	CHIP C	0.10UF	K		
C85			CE04KW1H100M	ELECTRO	10UF	50WV		
C88			CE04KW1H100M	ELECTRO	10UF	50WV		
C89			CK73FB1E104K	CHIP C	0.10UF	K		
C90			CK73GB1C104K	CHIP C	0.10UF	K		
C91			CE04KW1H100M	ELECTRO	10UF	50WV		
C92			CK73FB1E104K	CHIP C	0.10UF	K		
C93			CK73GB1C104K	CHIP C	0.10UF	K		
C94			CE04KW1H100M	ELECTRO	10UF	50WV		
C95			CK73FB1C105K	CHIP C	1.0UF	K		
C96			CK73GB1C104K	CHIP C	0.10UF	K		
C97			CE04KW1A101M	ELECTRO	100UF	10WV		
C98			CK73FB1E104K	CHIP C	0.10UF	K		
C99			CK73FB1H103K	CHIP C	0.010UF	K		
C100			CE04KW1C472M	ELECTRO	4700UF	16WV		
C101,102			CE04KW1H100M	ELECTRO	10UF	50WV		
C103-106			CK73GB1H182K	CHIP C	1800PF	K		

L : Scandinavia **K :** USA **P :** Canada **R :** Mexico **C :** China **I :** Malaysia
Y : PX(Far East,Hawaii) **T :** England **E :** Europe **G :** Germany **V :** China(Shanghai)
Y : AAFES(Europe) **X :** Australia **Q :** Russia **H :** Korea **M :** Other Areas ⚠ indicates safety critical components .

✻ New Parts
Parts without **Parts No.** are not supplied.
Les articles non mentionnes dans le **Parts No.** ne sont pas fournis.
Teile ohne **Parts No.** werden nicht geliefert.

❹

Ref. No	Address	New Parts	Parts No.	Description			Destination	Remarks
C109			CC73GCH1H101J	CHIP C	100PF	J		
C110			CK73GB1H103K	CHIP C	0.010UF	K		
C121,122			CE04KW1H100M	ELECTRO	10UF	50WV		
C123,124			CK73GB1H222K	CHIP C	2200PF	K		
C125,126			CK73GB1H821K	CHIP C	820PF	K		
C129			CC73GCH1H101J	CHIP C	100PF	J		
C130			CK73GB1H103K	CHIP C	0.010UF	K		
C141,142			CE04KW1H100M	ELECTRO	10UF	50WV		
C143-146			CK73GB1H182K	CHIP C	1800PF	K		
C149			CC73GCH1H101J	CHIP C	100PF	J		
C150			CK73GB1H103K	CHIP C	0.010UF	K		
C161,162			CE04KW1H100M	ELECTRO	10UF	50WV		
C163			CK73GB1H182K	CHIP C	1800PF	K		
C164			CK73GB1H822K	CHIP C	8200PF	K		
C165			CK73GB1H182K	CHIP C	1800PF	K		
C166			CK73GB1H822K	CHIP C	8200PF	K		
C169			CC73GCH1H101J	CHIP C	100PF	J		
C170			CK73GB1H103K	CHIP C	0.010UF	K		
C181,182			CC73GCH1H220J	CHIP C	22PF	J		
C189			CC73GCH1H101J	CHIP C	100PF	J		
C190			CK73GB1H103K	CHIP C	0.010UF	K		
C191-196			CE04KW1H4R7M	ELECTRO	4.7UF	50WV		
C197			CC73GCH1H102J	CHIP C	1000PF	J		
C198			CC73GCH1H101J	CHIP C	100PF	J		
C261,262			CE04KW1H100M	ELECTRO	10UF	50WV		
C263,264			CC73GCH1H220J	CHIP C	22PF	J		
C265,266			CE04KW1H4R7M	ELECTRO	4.7UF	50WV		
C267			CC73GCH1H101J	CHIP C	100PF	J		
C268			CK73GB1H103K	CHIP C	0.010UF	K		
C501-528			CK73GB1H103K	CHIP C	0.010UF	K		
C529			CE04KW1H100M	ELECTRO	10UF	50WV		
C530-543			CK73GB1H103K	CHIP C	0.010UF	K		
C544,545			CK73GB1C104K	CHIP C	0.10UF	K		
C546-553			CK73GB1H103K	CHIP C	0.010UF	K		
C554			CK73GB1C104K	CHIP C	0.10UF	K		
C555			CK73GB1H103K	CHIP C	0.010UF	K		
C556-558			CK73GB1H102K	CHIP C	1000PF	K		
C560			CK73GB1H103K	CHIP C	0.010UF	K		
C561,562			CC73GCH1H101J	CHIP C	100PF	J		
C563-565			CK73GB1H103K	CHIP C	0.010UF	K		
C567-570			CK73GB1H103K	CHIP C	0.010UF	K		
C571,572			CC73GCH1H150J	CHIP C	15PF	J		
C573			CK73GB1H102K	CHIP C	1000PF	K		
C574			CK73GB1H103K	CHIP C	0.010UF	K		
CN1			E40-3246-05	PIN ASSY				
CN2			E40-3254-05	PIN ASSY				
CN3			E40-3257-05	PIN ASSY				
CN4			E40-8484-05	FLAT CABLE CONNECTOR				
CN5			E40-3247-05	PIN ASSY				
J1			E63-1080-05	PIN JACK				
L1 ,2			L92-0510-05	CHIP FERRITE				
L3 -5			L92-0578-05	CHIP FERRITE				
X6			L77-2419-05	CRYSTAL RESONATOR(24.576MHZ)				
X51			L77-2420-05	CRYSTAL RESONATOR(18.75MHZ)				

L : Scandinavia **K :** USA **P :** Canada **R :** Mexico **C :** China **I :** Malaysia
Y : PX(Far East,Hawaii) **T :** England **E :** Europe **G :** Germany **V :** China(Shanghai)
Y : AAFES(Europe) **X :** Australia **Q :** Russia **H :** Korea **M :** Other Areas ⚠ indicates safety critical components .

✻ New Parts
Parts without **Parts No.** are not supplied.
Les articles non mentionnes dans le **Parts No.** ne sont pas fournis.
Teile ohne **Parts No.** werden nicht geliefert.

❺

Ref. No	Address	New Parts	Parts No.	Description			Destination	Remarks
CP51-66			R90-1033-05	MULTI-COMP	22 X4			
CP71-75			R90-0728-05	MULTI-COMP	180 X4			
R1 ,2			RK73GB1J101J	CHIP R	100	J 1/16W		
R3			R92-1946-05	METAL GLAZE	4.7	J 1/4W		
R4			RK73GB1J471J	CHIP R	470	J 1/16W		
R5 ,6			R92-1946-05	METAL GLAZE	4.7	J 1/4W		
R7 ,8			RK73GB1J750J	CHIP R	75	J 1/16W		
R11 ,12			RK73GB1J101J	CHIP R	100	J 1/16W		
R21			RK73GB1J183J	CHIP R	18K	J 1/16W		
R23			RK73GB1J330J	CHIP R	33	J 1/16W		
R24 -26			RK73GB1J101J	CHIP R	100	J 1/16W		
R27			RK73GB1J104J	CHIP R	100K	J 1/16W		
R30			RK73GB1J330J	CHIP R	33	J 1/16W		
R31			RK73GB1J101J	CHIP R	100	J 1/16W		
R32			RK73GB1J102J	CHIP R	1.0K	J 1/16W		
R33			RK73GB1J181J	CHIP R	180	J 1/16W		
R41			RK73GB1J330J	CHIP R	33	J 1/16W		
R42			RK73GB1J104J	CHIP R	100K	J 1/16W		
R43			RK73GB1J101J	CHIP R	100	J 1/16W		
R44 -49			RK73GB1J100J	CHIP R	10	J 1/16W		
R50			RK73GB1J181J	CHIP R	180	J 1/16W		
R51			RK73GB1J100J	CHIP R	10	J 1/16W		
R52			R92-1946-05	METAL GLAZE	4.7	J 1/4W		
R55 ,56			RK73GB1J471J	CHIP R	470	J 1/16W		
R61 ,62			RK73GB1J105J	CHIP R	1.0M	J 1/16W		
R63			RK73GB1J221J	CHIP R	220	J 1/16W		
R64			RK73FB2A2R2J	CHIP R	2.2	J 1/10W		
R65			RK73GB1J330J	CHIP R	33	J 1/16W		
R81			R92-1960-05	METAL GLAZE	2.2	J 1/4W		
R82 ,83			R92-1918-05	CHIP R	0.33	J 1/4W		
R84			RS14KB3D680J	FL-PROOF RS	68	J 2W		
R85			RS14KB3D560J	FL-PROOF RS	56	J 2W		
R86			RS14KB3D3R3J	FL-PROOF RS	3.3	J 2W	79Y1X1	
R86			RS14KB3D3R9J	FL-PROOF RS	3.9	J 2W	E1E2	
R87			RS14KB3D3R3J	FL-PROOF RS	3.3	J 2W		
R88			RS14KB3D2R2J	FL-PROOF RS	2.2	J 2W		
R89			RK73GB1J202J	CHIP R	2.0K	J 1/16W		
R90 ,91			RK73GB1J103J	CHIP R	10K	J 1/16W		
R92			RK73GB1J152J	CHIP R	1.5K	J 1/16W		
R93			RK73GB1J102J	CHIP R	1.0K	J 1/16W		
R94			RK73GB1J472J	CHIP R	4.7K	J 1/16W		
R95			RK73GB1J473J	CHIP R	47K	J 1/16W		
R96 ,97			RK73GB1J221J	CHIP R	220	J 1/16W		
R98			R92-1918-05	CHIP R	0.33	J 1/4W		
R101,102			RK73GB1J104J	CHIP R	100K	J 1/16W		
R103,104			RK73GB1J222J	CHIP R	2.2K	J 1/16W		
R105,106			RK73GB1J102J	CHIP R	1.0K	J 1/16W		
R107,108			RK73GB1J103J	CHIP R	10K	J 1/16W		
R109,110			RK73GB1J472J	CHIP R	4.7K	J 1/16W		
R111,112			RK73GB1J221J	CHIP R	220	J 1/16W		
R121,122			RK73GB1J104J	CHIP R	100K	J 1/16W		
R123,124			RK73GB1J332J	CHIP R	3.3K	J 1/16W		
R125,126			RK73GB1J911J	CHIP R	910	J 1/16W		
R127,128			RK73GB1J272J	CHIP R	2.7K	J 1/16W		
R129,130			RK73GB1J562J	CHIP R	5.6K	J 1/16W		

L : Scandinavia **K :** USA **P :** Canada **R :** Mexico **C :** China **I :** Malaysia
Y : PX(Far East,Hawaii) **T :** England **E :** Europe **G :** Germany **V :** China(Shanghai)
Y : AAFES(Europe) **X :** Australia **Q :** Russia **H :** Korea **M :** Other Areas ⚠ indicates safety critical components .

✻ New Parts
Parts without **Parts No.** are not supplied.
Les articles non mentionnes dans le **Parts No.** ne sont pas fournis.
Teile ohne **Parts No.** werden nicht geliefert.

❻

Ref. No	Address	New Parts	Parts No.	Description			Destination	Remarks
R131,132			RK73GB1J221J	CHIP R	220	J 1/16W		
R141,142			RK73GB1J104J	CHIP R	100K	J 1/16W		
R143,144			RK73GB1J222J	CHIP R	2.2K	J 1/16W		
R145,146			RK73GB1J102J	CHIP R	1.0K	J 1/16W		
R147,148			RK73GB1J103J	CHIP R	10K	J 1/16W		
R149,150			RK73GB1J472J	CHIP R	4.7K	J 1/16W		
R151,152			RK73GB1J221J	CHIP R	220	J 1/16W		
R161,162			RK73GB1J104J	CHIP R	100K	J 1/16W		
R163			RK73GB1J222J	CHIP R	2.2K	J 1/16W		
R164			RK73GB1J273J	CHIP R	27K	J 1/16W		
R165			RK73GB1J102J	CHIP R	1.0K	J 1/16W		
R166			RK73GB1J183J	CHIP R	18K	J 1/16W		
R167,168			RK73GB1J103J	CHIP R	10K	J 1/16W		
R169			RK73GB1J472J	CHIP R	4.7K	J 1/16W		
R170			RK73GB1J912J	CHIP R	9.1K	J 1/16W		
R171,172			RK73GB1J221J	CHIP R	220	J 1/16W		
R181,182			RK73GB1J102J	CHIP R	1.0K	J 1/16W		
R185-188			RK73GB1J562J	CHIP R	5.6K	J 1/16W		
R189,190			RK73GB1J101J	CHIP R	100	J 1/16W		
R201-208			RK73GB1J104J	CHIP R	100K	J 1/16W		
R209-212			RK73GB1J472J	CHIP R	4.7K	J 1/16W		
R213,214			RK73GB1J432J	CHIP R	4.3K	J 1/16W		
R215,216			RK73GB1J562J	CHIP R	5.6K	J 1/16W		
R217,218			RK73GB1J472J	CHIP R	4.7K	J 1/16W		
R219,220			RK73GB1J562J	CHIP R	5.6K	J 1/16W		
R261-264			RK73GB1J562J	CHIP R	5.6K	J 1/16W		
R265,266			RK73GB1J101J	CHIP R	100	J 1/16W		
R501,502			RK73GB1J330J	CHIP R	33	J 1/16W		
R503-506			RK73GB1J104J	CHIP R	100K	J 1/16W		
R507-509			RK73GB1J330J	CHIP R	33	J 1/16W		
R510			RK73GB1J104J	CHIP R	100K	J 1/16W		
R511,512			RK73GB1J330J	CHIP R	33	J 1/16W		
R513-515			RK73GB1J104J	CHIP R	100K	J 1/16W		
R516			RK73GB1J101J	CHIP R	100	J 1/16W		
R517			RK73GB1J220J	CHIP R	22	J 1/16W		
R518			RK73FB2A100J	CHIP R	10	J 1/10W		
R521			RK73GB1J472J	CHIP R	4.7K	J 1/16W		
R523,524			RK73GB1J472J	CHIP R	4.7K	J 1/16W		
R525,526			RK73GB1J220J	CHIP R	22	J 1/16W		
R527			RK73GB1J101J	CHIP R	100	J 1/16W		
R528-530			RK73GB1J472J	CHIP R	4.7K	J 1/16W		
R532-534			RK73GB1J472J	CHIP R	4.7K	J 1/16W		
R536			RK73GB1J103J	CHIP R	10K	J 1/16W		
R537-540			RK73GB1J472J	CHIP R	4.7K	J 1/16W		
R541-550			RK73GB1J100J	CHIP R	10	J 1/16W		
R551			RK73GB1J104J	CHIP R	100K	J 1/16W		
R552			RK73GB1J102J	CHIP R	1.0K	J 1/16W		
R553,554			RK73GB1J100J	CHIP R	10	J 1/16W		
R560-567			RK73GB1J472J	CHIP R	4.7K	J 1/16W		
R571			RK73GB1J105J	CHIP R	1.0M	J 1/16W		
R572			RK73GB1J101J	CHIP R	100	J 1/16W		
R573			RK73GB1J105J	CHIP R	1.0M	J 1/16W		
S1			S62-0034-05	SLIDE SWITCH			Y1	

L : Scandinavia **K :** USA **P :** Canada **R :** Mexico **C :** China **I :** Malaysia
Y : PX(Far East,Hawaii) **T :** England **E :** Europe **G :** Germany **V :** China(Shanghai)
Y : AAFES(Europe) **X :** Australia **Q :** Russia **H :** Korea **M :** Other Areas ⚠ indicates safety critical components .

✻ New Parts
Parts without **Parts No.** are not supplied.
Les articles non mentionnes dans le **Parts No.** ne sont pas fournis.
Teile ohne **Parts No.** werden nicht geliefert.

❼

Ref. No	Address	New Parts	Parts No.	Description	Destination	Remarks
D1			D2SBA20F03	DIODE		
D2 ,3			MA111	DIODE		
D4			MA111	DIODE		
D5			UDZ5.6B	ZENER DIODE		
D6 ,7			UDZ3.9B	ZENER DIODE		
D8			1SR154-400	DIODE		
D9			UDZ3.9B	ZENER DIODE		
D10			UDZ5.1B	ZENER DIODE		
D11 ,12			DAN202U	DIODE		
D13 -16			MA111	DIODE		
D17			1SR154-400	DIODE		
D41			DAP202U	DIODE		
D42			DAN202U	DIODE		
D51			MA111	DIODE		
IC1			AK4114VQ	MOS-IC		
IC2			AK4529-VQ	MOS-IC		
IC2			AK4628-VQ	MOS-IC		
IC2			AK4628A-VQ	MOS-IC		
IC6			TC7WU04FU	MOS-IC		
IC10			NJM4565M	ANALOGUE IC		
IC10			NJM4565MD	ANALOGUE IC		
IC12			NJM4565M	ANALOGUE IC		
IC12			NJM4565MD	ANALOGUE IC		
IC14			NJM4565M	ANALOGUE IC		
IC14			NJM4565MD	ANALOGUE IC		
IC16			NJM4565M	ANALOGUE IC		
IC16			NJM4565MD	ANALOGUE IC		
IC18			NJM4565M	ANALOGUE IC	7	
IC18			NJM4565MD	ANALOGUE IC	7	
IC18			NJM5532MD	ANALOGUE IC	89	
IC19			NJM4565M	ANALOGUE IC		
IC19			NJM4565M	ANALOGUE IC		
IC19			NJM4565M	ANALOGUE IC		
IC19			NJM4565MD	ANALOGUE IC		
IC20			NJU7311AM	MOS-IC		
IC21,22			BA033T	ANALOGUE IC		
IC23			BA05T	ANALOGUE IC		
IC24			XC6201P332PR	ANALOGUE IC		
IC26			SI-3010KM	ANALOGUE IC		
IC50		✻	ADSST-AVR-1040	MOS-IC	89	
IC50			ADSST-AVR-1050	MOS-IC	7	
IC51-53			SN74LVC573APWR	MOS-IC		
IC51-53			TC74LCX573FT	MOS-IC		
IC54			SN74LVC245APWR	MOS-IC		
IC54			TC74LCX245FT	MOS-IC		
IC55			SN74LVC2G125T3	MOS-IC		
IC56			SN74LVC139APWR	MOS-IC		
IC57			SN74LVC1G08DC3	MOS-IC		
IC57			TC7SA08FU	MOS-IC		
IC58			SN74LVC1G32DC3	MOS-IC		
IC59			A29L800TV70KB0	ROM IC	7	
IC59		✻	A29L800TV70KC1	ROM IC	89	
IC60			K6R4008V1DUC10	SRAM IC		
IC61			TC74VHC125FT	MOS-IC		
IC62			TC74HCT7007AF	MOS-IC		

L : Scandinavia **K :** USA **P :** Canada **R :** Mexico **C :** China **I :** Malaysia
Y : PX(Far East,Hawaii) **T :** England **E :** Europe **G :** Germany **V :** China(Shanghai)
Y : AAFES(Europe) **X :** Australia **Q :** Russia **H :** Korea **M :** Other Areas ⚠ indicates safety critical components .

✻ New Parts
Parts without **Parts No.** are not supplied.
Les articles non mentionnes dans le **Parts No.** ne sont pas fournis.
Teile ohne **Parts No.** werden nicht geliefert.

❽

Ref. No	Address	New Parts	Parts No.	Description			Destination	Remarks
IC63			SN74LVC1G32DC3	MOS-IC				
Q1			2SB1218A(Q,R)	TRANSISTOR				
Q2			2SD1819A(Q,R)	TRANSISTOR				
Q51			2SC4081(R,S)	TRANSISTOR				
A1 ,2			W02-4524-05	OPTIC RECEIVING MODULE				
A3		✻	W02-4540-05	OSCILLATING MODULE				
AUDIO (X09-6860-10) KRF-X9080D/VR-8070								
C1 ,2			CC45FSL1H221J	CERAMIC	220PF	J		
C3 ,4			CE04KW1H100M	ELECTRO	10UF	50WV		
C5 ,6			CC45FSL1H221J	CERAMIC	220PF	J		
C7 ,8			CE04KW1A101M	ELECTRO	100UF	10WV		
C9 ,10			CC45FSL1H271J	CERAMIC	270PF	J		
C11 ,12			CQ93FMG1H123J	MYLAR	0.012UF	J		
C13 ,14			CK45FB1H332K	CERAMIC	3300PF	K		
C15 ,16			CE04KW1H4R7M	ELECTRO	4.7UF	50WV		
C17 ,18			CC45FSL1H101J	CERAMIC	100PF	J		
C19 -38			CC45FSL1H221J	CERAMIC	220PF	J		
C39			CC45FSL1H101J	CERAMIC	100PF	J		
C40			CK45FF1H103Z	CERAMIC	0.010UF	Z	8	
C41			CK45FF1H103Z	CERAMIC	0.010UF	Z		
C42			CK45FF1H103Z	CERAMIC	0.010UF	Z	8	
C44 ,45			CE04KW1E470M	ELECTRO	47UF	25WV		
C46 ,47			CQ93FMG1H823J	MYLAR	0.082UF	J		
C51 -54			C91-1573-05	MP-C	0.10UF	J		
C55 ,56			CQ93FMG1H272J	MYLAR	2700PF	J		
C57 ,58			CE04KW1H2R2M	ELECTRO	2.2UF	50WV		
C62 ,63			CE04KW1H3R3M	ELECTRO	3.3UF	50WV		
C64 ,65			CE04KW2A3R3M	ELECTRO	3.3UF	100WV		
C66 ,67			CC45FSL1H331J	CERAMIC	330PF	J		
C68			CC45FCH1H070D	CERAMIC	7.0PF	D		
C69			CC45FCH1H080D	CERAMIC	8.0PF	D		
C70 ,71			CK45FB1H222K	CERAMIC	2200PF	K		
C72 ,73			CC45FSL1H101J	CERAMIC	100PF	J		
C74 ,75			CE04KW1A221M	ELECTRO	220UF	10WV		
C76 ,77			CC45FCH1H150J	CERAMIC	15PF	J		
C78 ,79			CK45FB1H561K	CERAMIC	560PF	K		
C84 ,85			CE04KW1E470M	ELECTRO	47UF	25WV		
C86 ,87			CC45FSL1H151J	CERAMIC	150PF	J		
C88 ,89			CC45FSL2H470J	CERAMIC	47PF	J		
C90 -93			C91-1577-05	MP-C	0.22UF	J	8	
C90 ,91			C91-1573-05	MP-C	0.10UF	J	9	
C94 ,95			CK45FB1H332K	CERAMIC	3300PF	K		
C111-114			CE04KW1H3R3M	ELECTRO	3.3UF	50WV		
C115,116			CC45FSL1H331J	CERAMIC	330PF	J		
C117,118			CC45FCH1H050C	CERAMIC	5.0PF	C		
C119,120			CK45FB1H222K	CERAMIC	2200PF	K		
C121,122			CC45FSL1H101J	CERAMIC	100PF	J		
C123,124			CE04KW1A221M	ELECTRO	220UF	10WV		
C125,126			CC45FCH1H150J	CERAMIC	15PF	J		
C127,128			CK45FB1H561K	CERAMIC	560PF	K		
C133,134			CE04KW1H220M	ELECTRO	22UF	50WV		

L : Scandinavia **K :** USA **P :** Canada **R :** Mexico **C :** China **I :** Malaysia
Y : PX(Far East,Hawaii) **T :** England **E :** Europe **G :** Germany **V :** China(Shanghai)
Y : AAFES(Europe) **X :** Australia **Q :** Russia **H :** Korea **M :** Other Areas ⚠ indicates safety critical components .

✻ New Parts
Parts without **Parts No.** are not supplied.
Les articles non mentionnes dans le **Parts No.** ne sont pas fournis.
Teile ohne **Parts No.** werden nicht geliefert.

9

Ref. No	Address	New Parts	Parts No.	Description			Destination	Remarks
C135,136			CC45FSL1H151J	CERAMIC	150PF	J		
C137,138			CC45FSL2H470J	CERAMIC	47PF	J		
C139-142			C91-1577-05	MP-C	0.22UF	J	8	
C139,140			C91-1573-05	MP-C	0.10UF	J	9	
C161			CE04KW1H3R3M	ELECTRO	3.3UF	50WV		
C163			CE04KW2A3R3M	ELECTRO	3.3UF	100WV		
C165			CC45FSL1H331J	CERAMIC	330PF	J		
C167			CC45FCH1H060D	CERAMIC	6.0PF	D		
C169			CK45FB1H222K	CERAMIC	2200PF	K		
C171			CC45FSL1H101J	CERAMIC	100PF	J		
C173			CE04KW1A221M	ELECTRO	220UF	10WV		
C175			CC45FCH1H150J	CERAMIC	15PF	J		
C177			CK45FB1H561K	CERAMIC	560PF	K		
C183			CE04KW1E470M	ELECTRO	47UF	25WV		
C185			CC45FSL1H151J	CERAMIC	150PF	J		
C187			CC45FSL2H470J	CERAMIC	47PF	J		
C189-192			C91-1577-05	MP-C	0.22UF	J	8	
C189,190			C91-1573-05	MP-C	0.10UF	J	9	
C193			CK45FB1H332K	CERAMIC	3300PF	K		
C195,196			CK45FB1H332K	CERAMIC	3300PF	K		
C301,302			C90-5771-05	ELECTRO	10000UF	75WV		
C303			CQ93FMG1H103J	MYLAR	0.010UF	J		
C304			CE04KW1A221M	ELECTRO	220UF	10WV		
C305			CE04KW1H101M	ELECTRO	100UF	50WV		
C306			CE04KW2A101M	ELECTRO	100UF	100WV		
C308			CE04KW1H100M	ELECTRO	10UF	50WV		
C309-311			CE04KW1H220M	ELECTRO	22UF	50WV		
C312			CE04KW1A101M	ELECTRO	100UF	10WV		
C315			CE04DW2A330M	ELECTRO	33UF	100WV		
C316			CE04KW2A100M	ELECTRO	10UF	100WV		
C317,318			CE04KW2A220M	ELECTRO	22UF	100WV		
C319,320			CC45FSL1H101J	CERAMIC	100PF	J		
C323			CK45FB1H102K	CERAMIC	1000PF	K		
C324,325			CE04DW1C471M	ELECTRO	470UF	16WV		
C326		✻	CC45FCH1H030C	CERAMIC	3.0PF	C		
C351-353			CC45FSL1H221J	CERAMIC	220PF	J		
C354			CQ93FMG1H122J	MYLAR	1200PF	J		
C355-360			CK45FF1H472Z	CERAMIC	4700PF	Z		
C361,362			CE04KW1H220M	ELECTRO	22UF	50WV		
C363			CE04KW1E470M	ELECTRO	47UF	25WV		
C364			CE04HW1H2R2M	NP-ELEC	2.2UF	50WV		
C365			CE04KW1A221M	ELECTRO	220UF	10WV		
C366			CE04KW1H4R7M	ELECTRO	4.7UF	50WV		
C367			CE04KW1A221M	ELECTRO	220UF	10WV		
C368			CE04KW1H4R7M	ELECTRO	4.7UF	50WV		
C369			CE04HW1E220M	NP-ELEC	22UF	25WV		
C370			CK45FB1H102K	CERAMIC	1000PF	K		
C450			CK45FE2H103P	CERAMIC	0.010UF	P		
C451-453			CK45FB2H102K	CERAMIC	1000PF	K		
C501,502			CC45FSL1H221J	CERAMIC	220PF	J		
C600			CE04KW1E101M	ELECTRO	100UF	25WV		
C609			CC45FCH1H180J	CERAMIC	18PF	J		
C610			CE04KW2A101M	ELECTRO	100UF	100WV		
C611			CE04KW1H220M	ELECTRO	22UF	50WV		
C722			CE04KW1H220M	ELECTRO	22UF	50WV		

L : Scandinavia **K :** USA **P :** Canada **R :** Mexico **C :** China **I :** Malaysia
Y : PX(Far East,Hawaii) **T :** England **E :** Europe **G :** Germany **V :** China(Shanghai)
Y : AAFES(Europe) **X :** Australia **Q :** Russia **H :** Korea **M :** Other Areas ⚠ indicates safety critical components .

✻ New Parts
Parts without **Parts No.** are not supplied.
Les articles non mentionnes dans le **Parts No.** ne sont pas fournis.
Teile ohne **Parts No.** werden nicht geliefert.

10

Ref. No	Address	New Parts	Parts No.	Description				Destination	Remarks
CN1		✻	E41-1010-05	PIN ASSY					
CN2			E41-0929-05	PIN ASSY					
CN3			E41-0928-05	PIN ASSY					
CN4 ,5			E40-8484-05	FLAT CABLE CONNECTOR					
CN6		✻	E41-0940-05	PIN ASSY					
CN7		✻	E41-0934-05	PIN ASSY					
CN8			E41-1009-05	PIN ASSY					
CN9			E41-0927-05	PIN ASSY				8	
CN10-15			E40-4871-05	PIN ASSY					
CN21			E40-8429-05	SOCKET FOR PIN ASSY					
CN22			E41-0934-05	PIN ASSY					
CN51			E41-0928-05	PIN ASSY					
CN52			E40-4669-05	PIN ASSY					
J3			E63-1247-05	PIN JACK					
J5			E70-0150-05	SCREW TERMINAL BOARD					
J6			E70-0160-05	LOCK TERMINAL BOARD					
J11 ,12			E63-1317-05	PIN JACK					
J21 ,22			E63-1317-05	PIN JACK					
J501			E11-0190-05	PHONE JACK	(3P)				
J501			E11-0271-05	PHONE JACK	(METAL SLEEVE)				
WH1		✻	E35-3240-15	WIRING HARNESS					
WH2		✻	E35-3247-05	WIRING HARNESS					
WH3		✻	E35-3672-05	WIRING HARNESS					
WH4		✻	E35-3656-05	WIRING HARNESS					
WH5		✻	E35-3654-05	WIRING HARNESS					
WH6		✻	E35-3655-05	WIRING HARNESS					
WH7		✻	E35-3676-05	WIRING HARNESS					
WH8		✻	E35-3695-05	WIRING HARNESS					
WH9		✻	E35-3392-05	WIRING HARNESS					
WH21		✻	E82-5515-04	FINISHED WIRE					
WH221		✻	E35-3678-05	WIRING HARNESS					
L1 -6			L39-0085-05	PHASE COMPENSATION COIL					
R61 ,62			RS14KB3A821J	FL-PROOF RS	820	J	1W		
R81 -84			RD14NB2E221J	RD	220	J	1/4W		
R85 ,86			RD14NB2E562J	RD	5.6K	J	1/4W		
R87 ,88			RD14NB2E331J	RD	330	J	1/4W		
R93 -96			RD14NB2E470J	RD	47	J	1/4W		
R97 ,98			RD14NB2E221J	RD	220	J	1/4W		
R99 ,100			RD14NB2E330J	RD	33	J	1/4W		
R101,102			RS14KB3D4R7J	FL-PROOF RS	4.7	J	2W		
R103,104			RS14KB3D391J	FL-PROOF RS	390	J	2W		
R131-134			RD14NB2E221J	RD	220	J	1/4W		
R135,136			RD14NB2E562J	RD	5.6K	J	1/4W		
R137,138			RD14NB2E331J	RD	330	J	1/4W		
R143-146			RD14NB2E470J	RD	47	J	1/4W		
R147,148			RD14NB2E221J	RD	220	J	1/4W		
R149,150			RD14NB2E330J	RD	33	J	1/4W		
R151,152			RS14KB3D4R7J	FL-PROOF RS	4.7	J	2W		
R181			RD14NB2E221J	RD	220	J	1/4W		
R183			RD14NB2E221J	RD	220	J	1/4W		
R185			RD14NB2E562J	RD	5.6K	J	1/4W		
R187			RD14NB2E331J	RD	330	J	1/4W		
R193			RD14NB2E470J	RD	47	J	1/4W		

L : Scandinavia **K :** USA **P :** Canada **R :** Mexico **C :** China **I :** Malaysia
Y : PX(Far East,Hawaii) **T :** England **E :** Europe **G :** Germany **V :** China(Shanghai)
Y : AAFES(Europe) **X :** Australia **Q :** Russia **H :** Korea **M :** Other Areas ⚠ indicates safety critical components .

✻ New Parts
Parts without **Parts No.** are not supplied.
Les articles non mentionnes dans le **Parts No.** ne sont pas fournis.
Teile ohne **Parts No.** werden nicht geliefert.

⓫

Ref. No	Address	New Parts	Parts No.	Description	Destination	Remarks
R195			RD14NB2E470J	RD 47 J 1/4W		
R197,198			RD14NB2E221J	RD 220 J 1/4W		
R199,200			RD14NB2E330J	RD 33 J 1/4W		
R201,202			RS14KB3D4R7J	FL-PROOF RS 4.7 J 2W		
⚠ R303			RD14NB2E561J	RD 560 J 1/4W		
⚠ R304			RS14KB3A822J	FL-PROOF RS 8.2K J 1W		
⚠ R306			RD14NB2E101J	RD 100 J 1/4W		
R307			RD14NB2E822J	RD 8.2K J 1/4W		
R310			RS14KB3A390J	FL-PROOF RS 39 J 1W		
R311			RS14KB3A680J	FL-PROOF RS 68 J 1W		
R314			RS14KB3A681J	FL-PROOF RS 680 J 1W		
R317			RS14KB3D152J	FL-PROOF RS 1.5K J 2W		
R318			RS14KB3D222J	FL-PROOF RS 2.2K J 2W		
⚠ R321,322			RD14NB2E1R0J	RD 1 J 1/4W		
⚠ R325,326			RD14NB2E472J	RD 4.7K J 1/4W		
R331-333			RS14KB3D182J	FL-PROOF RS 1.8K J 2W		
R342			RS14KB3A100J	FL-PROOF RS 10 J 1W		
R343			RS14KB3A470J	FL-PROOF RS 47 J 1W		
R454			RS14KB3A391J	FL-PROOF RS 390 J 1W		
⚠ R476			RD14NB2E561J	RD 560 J 1/4W		
R627			RD14NB2E472J	RD 4.7K J 1/4W		
R733			RD14NB2E470J	RD 47 J 1/4W		
R735			RD14NB2E470J	RD 47 J 1/4W		
VR1 -6			R32-0032-05	SEMI FIXED VARIABLE RESISTOR		
K2 -5			S76-0098-05	MAGNETIC RELAY		
D1 -5			HSS104A	DIODE		
D1 -5			1SS133	DIODE		
D6			HSS104A	DIODE	8	
D6			1SS133	DIODE	8	
D7			MTZJ5.1(B)	ZENER DIODE	8	
D7			RD5.1ES(B)	ZENER DIODE	8	
D8			MTZJ3.9(B)	ZENER DIODE	8	
D8			RD3.9ES(B)	ZENER DIODE	8	
⚠ D12			D5SBA20F03	DIODE		
⚠ D12			TS6P03G-B	DIODE		
⚠ D14 ,15			S5688B	DIODE		
D16			HSS104A	DIODE		
D16			1SS133	DIODE		
D17			MTZJ16(B)	ZENER DIODE		
D17			RD16ES(B)	ZENER DIODE		
D18			MTZJ15(B)	ZENER DIODE		
D18			RD15ES(B)	ZENER DIODE		
D19			MTZJ16(B)	ZENER DIODE		
D19			RD16ES(B)	ZENER DIODE		
D20			MTZJ6.2(B)	ZENER DIODE		
D20			RD6.2ES(B)	ZENER DIODE		
D21			MTZJ6.8(B)	ZENER DIODE		
D21			RD6.8ES(B)	ZENER DIODE		
D22			MTZJ5.1(B)	ZENER DIODE		
D22			RD5.1ES(B)	ZENER DIODE		
D23			MTZJ13(B)	ZENER DIODE	Y1X1	
D23			MTZJ15(B)	ZENER DIODE	9	
D23			MTZJ7.5(B)	ZENER DIODE	E1E2	
D23			RD13ES(B)	ZENER DIODE	Y1X1	

L : Scandinavia **K :** USA **P :** Canada **R :** Mexico **C :** China **I :** Malaysia
Y : PX(Far East,Hawaii) **T :** England **E :** Europe **G :** Germany **V :** China(Shanghai)
Y : AAFES(Europe) **X :** Australia **Q :** Russia **H :** Korea **M :** Other Areas ⚠ indicates safety critical components .

✻ New Parts
Parts without **Parts No.** are not supplied.
Les articles non mentionnes dans le **Parts No.** ne sont pas fournis.
Teile ohne **Parts No.** werden nicht geliefert.

⓬

Ref. No	Address	New Parts	Parts No.	Description	Destination	Remarks
D23			RD15ES(B)	ZENER DIODE	9	
D23			RD7.5ES(B)	ZENER DIODE	E1E2	
D24			MTZJ7.5(B)	ZENER DIODE	Y1X1	
D24			MTZJ8.2(B)	ZENER DIODE	9E1E2	
D24			RD7.5ES(B)	ZENER DIODE	Y1X1	
D24			RD8.2ES(B)	ZENER DIODE	9E1E2	
D25			MTZJ30(B)	ZENER DIODE		
D25			RD30ES(B)	ZENER DIODE		
D26			MTZJ3.9(B)	ZENER DIODE	E1E2	
D26			RD3.9ES(B)	ZENER DIODE	E1E2	
D27			1SS244	DIODE		
D28 ,29			HSS104A	DIODE		
D28 ,29			1SS133	DIODE		
D32 -35			HSS104A	DIODE		
D32 -35			1SS133	DIODE		
D51 ,52			1SS244	DIODE		
D53 ,54			HSS104A	DIODE		
D53 ,54			1SS133	DIODE		
D55 ,56			1SS244	DIODE		
D57 ,58			HSS104A	DIODE		
D57 ,58			1SS133	DIODE		
D59 ,60			1SS244	DIODE		
D61 ,62			HSS104A	DIODE		
D61 ,62			1SS133	DIODE		
D63			MTZJ3.9(B)	ZENER DIODE		
D63			RD3.9ES(B)	ZENER DIODE		
D64			HSS104A	DIODE		
D64			1SS133	DIODE		
D65			MTZJ3.9(B)	ZENER DIODE		
D65			RD3.9ES(B)	ZENER DIODE		
D66			HSS104A	DIODE		
D66			1SS133	DIODE		
D67			MTZJ3.9(B)	ZENER DIODE		
D67			RD3.9ES(B)	ZENER DIODE		
D68			HSS104A	DIODE		
D68			1SS133	DIODE		
D69			MTZJ3.9(B)	ZENER DIODE		
D69			RD3.9ES(B)	ZENER DIODE		
D602-604			HSS104A	DIODE		
D602-604			1SS133	DIODE		
D608			MTZJ30(B)	ZENER DIODE		
D608			RD30ES(B)	ZENER DIODE		
D609			MTZJ20(B)	ZENER DIODE		
D609			RD20ES(B)	ZENER DIODE		
IC1			NJM4580L	ANALOGUE IC		
IC2			M61516FP	ANALOGUE IC		
Q1 -4			2SA992(F,E)	TRANSISTOR		
Q5 ,6			2SA1123(R,S)	TRANSISTOR		
Q7 -10			2SC2631(R,S)	TRANSISTOR		
⚠ Q11 ,12			TRAIT3KN	TRANSISTOR		
⚠ Q13 ,14			TRAIT3KP	TRANSISTOR		
Q21 -24			2SA992(F,E)	TRANSISTOR		
Q25 ,26			2SA1123(R,S)	TRANSISTOR		
Q27 -30			2SC2631(R,S)	TRANSISTOR		
⚠ Q31 ,32			TRAIT3KN	TRANSISTOR		

L : Scandinavia **K :** USA **P :** Canada **R :** Mexico **C :** China **I :** Malaysia
Y : PX(Far East,Hawaii) **T :** England **E :** Europe **G :** Germany **V :** China(Shanghai)
Y : AAFES(Europe) **X :** Australia **Q :** Russia **H :** Korea **M :** Other Areas ⚠ indicates safety critical components .

✻ New Parts
Parts without **Parts No.** are not supplied.
Les articles non mentionnes dans le **Parts No.** ne sont pas fournis.
Teile ohne **Parts No.** werden nicht geliefert.

⑬

Ref. No	Address	New Parts	Parts No.	Description	Destination	Remarks
⚠ Q33 ,34			TRAIT3KP	TRANSISTOR		
Q41			2SA992(F,E)	TRANSISTOR		
Q43			2SA992(F,E)	TRANSISTOR		
Q45			2SA1123(R,S)	TRANSISTOR		
Q47			2SC2631(R,S)	TRANSISTOR		
Q49			2SC2631(R,S)	TRANSISTOR		
⚠ Q51 ,52			TRAIT3KN	TRANSISTOR		
⚠ Q53 ,54			TRAIT3KP	TRANSISTOR		
Q302			DTC113ZSA	DIGITAL TRANSISTOR		
Q302			UN4219	DIGITAL TRANSISTOR		
⚠ Q303			2SC3940A(R,S)	TRANSISTOR		
⚠ Q304			2SB1640	TRANSISTOR		
Q305			UN421N	DIGITAL TRANSISTOR		
⚠ Q306			2SB1640	TRANSISTOR		
⚠ Q307			2SD2525	TRANSISTOR		
Q308			2SA992(F,E)	TRANSISTOR		
Q309-312			KTC3200	TRANSISTOR		
Q313			UN421N	DIGITAL TRANSISTOR	E1E2	
Q331-335			2SC2878(B)	TRANSISTOR		
Q353-358			2SC1845(F,E)	TRANSISTOR		
Q359			2SA992(F,E)	TRANSISTOR		
Q360,361			2SC1845(F,E)	TRANSISTOR		
Q362			2SA992(F,E)	TRANSISTOR		
Q363,364			2SC1845(F,E)	TRANSISTOR		
Q365			2SA992(F,E)	TRANSISTOR		
Q602-604			2SC1845(F,E)	TRANSISTOR		
Q605,606			2SC2878(B)	TRANSISTOR		
Q607			2SA992(F,E)	TRANSISTOR		
⚠ Q610			2SD2012	TRANSISTOR		
Q611			KTC3199(Y,GR)	TRANSISTOR	8	
Q611			2SC1740S(Q,R)	TRANSISTOR	8	
Q612			KTA1267(Y,GR)	TRANSISTOR	8	
Q612			2SA933AS(Q,R)	TRANSISTOR	8	

AUDIO (X09-6760-13) VR-8060

C1 ,2			CC45FSL1H221J	CERAMIC	220PF	J		
C3 ,4			CE04LW1H100M	ELECTRO	10UF	50WV		
C5 ,6			CC45FSL1H221J	CERAMIC	220PF	J		
C7 ,8			CE04LW1A101M	ELECTRO	100UF	10WV		
C9 ,10			CC45FSL1H271J	CERAMIC	270PF	J		
C11 ,12			CQ93FMG1H123J	MYLAR	0.012UF	J		
C13 ,14			CK45FB1H332K	CERAMIC	3300PF	K		
C15 ,16			CE04LW1H4R7M	ELECTRO	4.7UF	50WV		
C17 ,18			CC45FCH1H101J	CERAMIC	100PF	J		
C19 -38			CC45FSL1H221J	CERAMIC	220PF	J		
C44 ,45			CE04LW1E470M	ELECTRO	47UF	25WV		
C46 ,47			CQ93FMG1H823J	MYLAR	0.082UF	J		
C51 -54			C91-1573-05	MP-C	0.10UF	J		
C55 ,56			CQ93FMG1H272J	MYLAR	2700PF	J		
C57 ,58			CE04LW1H2R2M	ELECTRO	2.2UF	50WV		
C62 -65			CE04KW1H3R3M	ELECTRO	3.3UF	50WV		
C66 ,67			CC45FSL1H331J	CERAMIC	330PF	J		
C68			CC45FCH1H070D	CERAMIC	7.0PF	D		
C69			CC45FCH1H080D	CERAMIC	8.0PF	D		
C70 ,71			CK45FB1H222K	CERAMIC	2200PF	K		

L : Scandinavia **K :** USA **P :** Canada **R :** Mexico **C :** China **I :** Malaysia
Y : PX(Far East,Hawaii) **T :** England **E :** Europe **G :** Germany **V :** China(Shanghai)
Y : AAFES(Europe) **X :** Australia **Q :** Russia **H :** Korea **M :** Other Areas ⚠ indicates safety critical components .

✻ New Parts
Parts without **Parts No.** are not supplied.
Les articles non mentionnes dans le **Parts No.** ne sont pas fournis.
Teile ohne **Parts No.** werden nicht geliefert.

⑭

Ref. No	Address	New Parts	Parts No.	Description			Destination	Remarks
C72 ,73			CC45FCH1H101J	CERAMIC	100PF	J		
C74 ,75			CE04KW1E101M	ELECTRO	100UF	25WV		
C76 ,77			CC45FCH1H100D	CERAMIC	10PF	D		
C78 ,79			CK45FB1H561K	CERAMIC	560PF	K		
C82 ,83			CC45FCH1H100D	CERAMIC	10PF	D		
C84 ,85			CE04KW1H220M	ELECTRO	22UF	50WV		
C86 ,87			CC45FSL1H470J	CERAMIC	47PF	J		
C88 ,89			CC45FSL2H470J	CERAMIC	47PF	J		
C90 ,91			C91-1573-05	MP-C	0.10UF	J		
C94 ,95			CK45FB1H332K	CERAMIC	3300PF	K		
C111,112			CE04KW1H3R3M	ELECTRO	3.3UF	50WV		
C113,114			CE04LW1H3R3M	ELECTRO	3.3UF	50WV		
C115,116			CC45FSL1H331J	CERAMIC	330PF	J		
C117,118			CC45FCH1H050C	CERAMIC	5.0PF	C		
C119,120			CK45FB1H222K	CERAMIC	2200PF	K		
C121,122			CC45FCH1H101J	CERAMIC	100PF	J		
C123,124			CE04KW1A221M	ELECTRO	220UF	10WV		
C125,126			CC45FCH1H100D	CERAMIC	10PF	D		
C127,128			CK45FB1H561K	CERAMIC	560PF	K		
C133,134			CE04LW1H220M	ELECTRO	22UF	50WV		
C135,136			CC45FSL1H470J	CERAMIC	47PF	J		
C137,138			CC45FSL2H470J	CERAMIC	47PF	J		
C139,140			C91-1573-05	MP-C	0.10UF	J		
C161			CE04KW1H3R3M	ELECTRO	3.3UF	50WV		
C163			CE04KW1H3R3M	ELECTRO	3.3UF	50WV		
C164			CE04LW1H3R3M	ELECTRO	3.3UF	50WV		
C165,166			CC45FSL1H331J	CERAMIC	330PF	J		
C167			CC45FCH1H060D	CERAMIC	6.0PF	D		
C168			CC45FSL1H270J	CERAMIC	27PF	J		
C169,170			CK45FB1H222K	CERAMIC	2200PF	K		
C171,172			CC45FCH1H101J	CERAMIC	100PF	J		
C173			CE04KW1E101M	ELECTRO	100UF	25WV		
C174			CE04KW1A221M	ELECTRO	220UF	10WV		
C175,176			CC45FCH1H100D	CERAMIC	10PF	D		
C177,178			CK45FB1H561K	CERAMIC	560PF	K		
C181			CC45FCH1H100D	CERAMIC	10PF	D		
C183			CE04KW1H220M	ELECTRO	22UF	50WV		
C184			CE04LW1H220M	ELECTRO	22UF	50WV		
C185			CC45FSL1H470J	CERAMIC	47PF	J		
C186			CC45FSL1H101J	CERAMIC	100PF	J		
C187,188			CC45FSL2H470J	CERAMIC	47PF	J		
C189,190			C91-1573-05	MP-C	0.10UF	J		
C193			CK45FB1H332K	CERAMIC	3300PF	K		
C195,196			CK45FB1H332K	CERAMIC	3300PF	K		
C227,228			CE04LW1H220M	ELECTRO	22UF	50WV		
C301,302			C90-5775-05	ELECTRO	4700UF	75WV		
C303			CQ93FMG1H103J	MYLAR	0.010UF	J		
C304			CE04LW1A221M	ELECTRO	220UF	10WV		
C305			CE04KW1H101M	ELECTRO	100UF	50WV		
C306			CE04LW2A101M	ELECTRO	100UF	100WV		
C307			CC45FSL1H221J	CERAMIC	220PF	J		
C308			CE04LW1H100M	ELECTRO	10UF	50WV		
C309			CE04LW1H220M	ELECTRO	22UF	50WV		
C310,311			CE04KW1H220M	ELECTRO	22UF	50WV		
C312			CE04LW1A101M	ELECTRO	100UF	10WV		

L : Scandinavia **K :** USA **P :** Canada **R :** Mexico **C :** China **I :** Malaysia
Y : PX(Far East,Hawaii) **T :** England **E :** Europe **G :** Germany **V :** China(Shanghai)
Y : AAFES(Europe) **X :** Australia **Q :** Russia **H :** Korea **M :** Other Areas ⚠ indicates safety critical components .

✻ New Parts
Parts without **Parts No.** are not supplied.
Les articles non mentionnes dans le **Parts No.** ne sont pas fournis.
Teile ohne **Parts No.** werden nicht geliefert.

⑮

Ref. No	Address	New Parts	Parts No.	Description			Destination	Remarks
C313,314			CE04LW1E470M	ELECTRO	47UF	25WV		
C315			CE04LW2A330M	ELECTRO	33UF	100WV		
C316			CE04LW2A100M	ELECTRO	10UF	100WV		
C317,318			CE04KW2A220M	ELECTRO	22UF	100WV		
C319,320			CC45FCH1H101J	CERAMIC	100PF	J		
C321			CC45FCH1H100D	CERAMIC	10PF	D		
C322			CC45FCH1H150J	CERAMIC	15PF	J		
C323			CK45FB1H102K	CERAMIC	1000PF	K		
C324,325			CE04DW1C471M	ELECTRO	470UF	16WV		
C351-353			CC45FSL1H221J	CERAMIC	220PF	J		
C354			CQ93FMG1H122J	MYLAR	1200PF	J		
C355-360			CK45FF1H472Z	CERAMIC	4700PF	Z		
C361			CE04KW1H220M	ELECTRO	22UF	50WV		
C362,363			CE04LW1H220M	ELECTRO	22UF	50WV		
C364			CE04HW1H2R2M	NP-ELEC	2.2UF	50WV		
C365			CE04KW1A221M	ELECTRO	220UF	10WV		
C366			CE04LW1H4R7M	ELECTRO	4.7UF	50WV		
C367			CE04KW1A221M	ELECTRO	220UF	10WV		
C368			CE04LW1H4R7M	ELECTRO	4.7UF	50WV		
C369			CE04HW1C330M	NP-ELEC	33UF	16WV		
C370			CK45FB1H102K	CERAMIC	1000PF	K		
C450			CK45FE2H103P	CERAMIC	0.010UF	P		
C451-453			CK45FB2H102K	CERAMIC	1000PF	K		
C501,502			CC45FSL1H221J	CERAMIC	220PF	J		
C600			CE04KW1E101M	ELECTRO	100UF	25WV		
C611			CE04KW1H220M	ELECTRO	22UF	50WV		
CN1			E40-3912-05	PIN ASSY				
CN1			E40-8361-05	PIN ASSY				
CN2			E40-3248-05	PIN ASSY				
CN3			E40-3247-05	PIN ASSY				
CN4			E40-8484-05	FLAT CABLE CONNECTOR				
CN5			E40-8483-05	FLAT CABLE CONNECTOR				
CN6			E40-3259-05	PIN ASSY				
CN7			E40-3253-05	PIN ASSY				
CN10-15			E40-4871-05	PIN ASSY				
CN21			E40-8429-05	SOCKET FOR PIN ASSY				
CN22			E40-3253-05	PIN ASSY				
CN51			E40-3247-05	PIN ASSY				
J3			E63-1247-05	PIN JACK				
J5			E70-0150-05	SCREW TERMINAL BOARD				
J6			E70-0160-05	LOCK TERMINAL BOARD				
J11 ,12			E63-1317-05	PIN JACK				
J21 ,22			E63-1317-05	PIN JACK				
J501			E11-0190-05	PHONE JACK	(3P)			
J501			E11-0271-05	PHONE JACK	(METAL SLEEVE)			
WH1		✻	E35-3240-15	WIRING HARNESS				
WH2		✻	E35-3247-05	WIRING HARNESS				
WH3		✻	E35-3305-15	WIRING HARNESS				
WH3		✻	E35-3508-05	WIRING HARNESS				
WH4		✻	E35-3391-05	WIRING HARNESS				
WH4		✻	E35-3507-05	WIRING HARNESS				
WH5		✻	E35-3393-05	WIRING HARNESS				
WH5		✻	E35-3511-05	WIRING HARNESS				
WH6		✻	E35-3392-05	WIRING HARNESS				
WH6		✻	E35-3510-05	WIRING HARNESS				

L : Scandinavia **K :** USA **P :** Canada **R :** Mexico **C :** China **I :** Malaysia
Y : PX(Far East,Hawaii) **T :** England **E :** Europe **G :** Germany **V :** China(Shanghai)
Y : AAFES(Europe) **X :** Australia **Q :** Russia **H :** Korea **M :** Other Areas ⚠ indicates safety critical components .

✻ New Parts
Parts without **Parts No.** are not supplied.
Les articles non mentionnes dans le **Parts No.** ne sont pas fournis.
Teile ohne **Parts No.** werden nicht geliefert.

⑯

Ref. No	Address	New Parts	Parts No.	Description				Destination	Remarks
WH21		✻	E82-5515-04	FINISHED WIRE					
WH221		✻	E35-3678-05	WIRING HARNESS					
L1 -6			L39-0085-05	PHASE COMPENSATION COIL					
R81 -84			RD14NB2E221J	RD	220	J	1/4W		
R85 ,86			RD14NB2E562J	RD	5.6K	J	1/4W		
R87 ,88			RD14NB2E331J	RD	330	J	1/4W		
R93 -96			RD14NB2E470J	RD	47	J	1/4W		
R97 ,98			RD14NB2E221J	RD	220	J	1/4W		
R99 ,100			RD14NB2E330J	RD	33	J	1/4W		
R101,102			RS14KB3D4R7J	FL-PROOF RS	4.7	J	2W		
R103,104			RS14KB3D391J	FL-PROOF RS	390	J	2W		
R131-134			RD14NB2E221J	RD	220	J	1/4W		
R135,136			RD14NB2E562J	RD	5.6K	J	1/4W		
R137,138			RD14NB2E331J	RD	330	J	1/4W		
R143-146			RD14NB2E470J	RD	47	J	1/4W		
R147,148			RD14NB2E221J	RD	220	J	1/4W		
R149,150			RD14NB2E330J	RD	33	J	1/4W		
R151,152			RS14KB3D4R7J	FL-PROOF RS	4.7	J	2W		
R181-184			RD14NB2E221J	RD	220	J	1/4W		
R185,186			RD14NB2E562J	RD	5.6K	J	1/4W		
R187,188			RD14NB2E331J	RD	330	J	1/4W		
R193-196			RD14NB2E470J	RD	47	J	1/4W		
R197,198			RD14NB2E221J	RD	220	J	1/4W		
R199,200			RD14NB2E330J	RD	33	J	1/4W		
R201,202			RS14KB3D4R7J	FL-PROOF RS	4.7	J	2W		
R301			RS14KB3D182J	FL-PROOF RS	1.8K	J	2W		
⚠ R303			RD14NB2E1R0J	RD	1	J	1/4W		
⚠ R304			RS14KB3A103J	FL-PROOF RS	10K	J	1W		
⚠ R306			RD14NB2E101J	RD	100	J	1/4W		
⚠ R307			RD14NB2E822J	RD	8.2K	J	1/4W		
R310,311			RS14KB3A680J	FL-PROOF RS	68	J	1W		
R314			RS14KB3A681J	FL-PROOF RS	680	J	1W		
⚠ R315,316			RD14NB2E100J	RD	10	J	1/4W		
R317			RS14KB3D122J	FL-PROOF RS	1.2K	J	2W		
R318			RS14KB3D152J	FL-PROOF RS	1.5K	J	2W		
⚠ R321,322			RD14NB2E1R0J	RD	1	J	1/4W		
⚠ R325,326			RD14NB2E472J	RD	4.7K	J	1/4W		
R331-333			RS14KB3D182J	FL-PROOF RS	1.8K	J	2W		
R342			RS14KB3A100J	FL-PROOF RS	10	J	1W		
R343			RS14KB3A470J	FL-PROOF RS	47	J	1W		
R454			RS14KB3A391J	FL-PROOF RS	390	J	1W		
⚠ R476			RD14NB2E561J	RD	560	J	1/4W		
VR1 -6			R32-0032-05	SEMI FIXED VARIABLE RESISTOR					
K1			S76-0134-05	MAGNETIC RELAY					
K2 -5			S76-0045-15	MAGNETIC RELAY					
D1 -6			HSS104A	DIODE					
D1 -6			1SS133	DIODE					
⚠ D11 ,12			D5SBA20F03	DIODE					
⚠ D11 ,12			TS6P03G-B	DIODE					
D13			HSS104A	DIODE					
D13			1SS133	DIODE					
⚠ D14 ,15			1SR139-400	DIODE					

L : Scandinavia **K :** USA **P :** Canada **R :** Mexico **C :** China **I :** Malaysia
Y : PX(Far East,Hawaii) **T :** England **E :** Europe **G :** Germany **V :** China(Shanghai)
Y : AAFES(Europe) **X :** Australia **Q :** Russia **H :** Korea **M :** Other Areas ⚠ indicates safety critical components .

✻ New Parts
Parts without **Parts No.** are not supplied.
Les articles non mentionnes dans le **Parts No.** ne sont pas fournis.
Teile ohne **Parts No.** werden nicht geliefert.

⑰

Ref. No	Address	New Parts	Parts No.	Description	Destination	Remarks
D16			HSS104A	DIODE		
D16			1SS133	DIODE		
D17			MTZJ16(B)	ZENER DIODE		
D17			RD16ES(B)	ZENER DIODE		
D18			MTZJ15(B)	ZENER DIODE		
D18			RD15ES(B)	ZENER DIODE		
D19			MTZJ16(B)	ZENER DIODE		
D19			RD16ES(B)	ZENER DIODE		
D20 ,21			MTZJ6.8(B)	ZENER DIODE		
D20 ,21			RD6.8ES(B)	ZENER DIODE		
D22			MTZJ5.1(B)	ZENER DIODE		
D22			RD5.1ES(B)	ZENER DIODE		
D23			MTZJ10(B)	ZENER DIODE		
D23			RD10ES(B)	ZENER DIODE		
D24			MTZJ15(B)	ZENER DIODE		
D24			RD15ES(B)	ZENER DIODE		
D25			MTZJ24(B)	ZENER DIODE		
D25			RD24ES(B)	ZENER DIODE		
D27			1SS244	DIODE		
D28 -30			HSS104A	DIODE		
D28 -30			1SS133	DIODE		
D32 -35			HSS104A	DIODE		
D32 -35			1SS133	DIODE		
D51 ,52			1SS244	DIODE		
D53 ,54			HSS104A	DIODE		
D53 ,54			1SS133	DIODE		
D55 ,56			1SS244	DIODE		
D57 ,58			HSS104A	DIODE		
D57 ,58			1SS133	DIODE		
D59 ,60			1SS244	DIODE		
D61			HSS104A	DIODE		
D61			1SS133	DIODE		
D63			MTZJ3.9(B)	ZENER DIODE		
D63			RD3.9ES(B)	ZENER DIODE		
D64			HSS104A	DIODE		
D64			1SS133	DIODE		
D65			MTZJ3.9(B)	ZENER DIODE		
D65			RD3.9ES(B)	ZENER DIODE		
D66			HSS104A	DIODE		
D66			1SS133	DIODE		
D67			MTZJ3.9(B)	ZENER DIODE		
D67			RD3.9ES(B)	ZENER DIODE		
D68			HSS104A	DIODE		
D68			1SS133	DIODE		
D69			MTZJ3.9(B)	ZENER DIODE		
D69			RD3.9ES(B)	ZENER DIODE		
D221			MTZJ11(B)	ZENER DIODE		
D221			RD11ES(B)	ZENER DIODE		
D602-604			HSS104A	DIODE		
D602-604			1SS133	DIODE		
IC1			NJM4580L	ANALOGUE IC		
IC2			M61516FP	ANALOGUE IC		
IC5			LC4966	MOS-IC		
Q1 -4			2SA992(F,E)	TRANSISTOR		
Q5 ,6			2SA1123(R,S)	TRANSISTOR		
Q7 -10			2SC2631(R,S)	TRANSISTOR		

L : Scandinavia **K :** USA **P :** Canada **R :** Mexico **C :** China **I :** Malaysia
Y : PX(Far East,Hawaii) **T :** England **E :** Europe **G :** Germany **V :** China(Shanghai)
Y : AAFES(Europe) **X :** Australia **Q :** Russia **H :** Korea **M :** Other Areas ⚠ indicates safety critical components .

✻ New Parts
Parts without **Parts No.** are not supplied.
Les articles non mentionnes dans le **Parts No.** ne sont pas fournis.
Teile ohne **Parts No.** werden nicht geliefert.

⑱

Ref. No	Address	New Parts	Parts No.	Description	Destination	Remarks
⚠ Q11 ,12			TRAIT3KN	TRANSISTOR		
⚠ Q13 ,14			TRAIT3KP	TRANSISTOR		
Q21 -24			2SA992(F,E)	TRANSISTOR		
Q25 ,26			2SA1123(R,S)	TRANSISTOR		
Q27 -30			2SC2631(R,S)	TRANSISTOR		
⚠ Q31 ,32			TRAIT3KN	TRANSISTOR		
⚠ Q33 ,34			TRAIT3KP	TRANSISTOR		
Q41 -44			2SA992(F,E)	TRANSISTOR		
Q45 ,46			2SA1123(R,S)	TRANSISTOR		
Q47 -50			2SC2631(R,S)	TRANSISTOR		
⚠ Q51 ,52			TRAIT3KN	TRANSISTOR		
⚠ Q53 ,54			TRAIT3KP	TRANSISTOR		
Q301			KTC3200	TRANSISTOR		
Q302			DTC113ZSA	DIGITAL TRANSISTOR		
Q302			UN4219	DIGITAL TRANSISTOR		
Q303			2SC3940A(R,S)	TRANSISTOR		
⚠ Q304			2SB1640	TRANSISTOR		
Q305			UN421N	DIGITAL TRANSISTOR		
⚠ Q306			2SB1640	TRANSISTOR		
⚠ Q307			2SD2525	TRANSISTOR		
Q308			2SA992(F,E)	TRANSISTOR		
Q309-312			KTC3200	TRANSISTOR		
Q331-336			2SC2878(B)	TRANSISTOR		
Q351			UN421N	DIGITAL TRANSISTOR		
Q352			DTC124ESA	DIGITAL TRANSISTOR		
Q352			UN4212	DIGITAL TRANSISTOR		
Q353-358			2SC1845(F,E)	TRANSISTOR		
Q359			2SA992(F,E)	TRANSISTOR		
Q360,361			2SC1845(F,E)	TRANSISTOR		
Q362			2SA992(F,E)	TRANSISTOR		
Q363,364			2SC1845(F,E)	TRANSISTOR		
Q365			2SA992(F,E)	TRANSISTOR		
Q602-604			2SC1845(F,E)	TRANSISTOR		
Q605,606			2SC2878(B)	TRANSISTOR		
Q607			2SA992(F,E)	TRANSISTOR		

SUB (X13-7940-10)

C101-106			CC45FCH1H100D	CERAMIC	10PF	D	
C107,108			CC45FSL1H820J	CERAMIC	82PF	J	
C109			CC45FCH1H100D	CERAMIC	10PF	D	
C110-115			CE04KW1H010M	ELECTRO	1.0UF	50WV	
C116-118			CE04KW1A471M	ELECTRO	470UF	10WV	
C119-126			CK45FF1H103Z	CERAMIC	0.010UF	Z	
C127			CE04KW1V330M	ELECTRO	33UF	35WV	
C128-130			CC45FCH1H100D	CERAMIC	10PF	D	
C131-133			CE04KW1H010M	ELECTRO	1.0UF	50WV	
C134-136			CK45FF1H103Z	CERAMIC	0.010UF	Z	
C137			CE04KW1E470M	ELECTRO	47UF	25WV	
C138-140			CQ93FMG1H104J	MYLAR	0.10UF	J	
C141			CC45FCH1H100D	CERAMIC	10PF	D	
C142			CE04KW1H100M	ELECTRO	10UF	50WV	
C151,152			CE04KW1H4R7M	ELECTRO	4.7UF	50WV	89
C153,154			CE04KW1E470M	ELECTRO	47UF	25WV	89
C155,156			CC45FSL1H820J	CERAMIC	82PF	J	89
C157,158			CE04KW1H220M	ELECTRO	22UF	50WV	89
C169			CK73GB1H331K	CHIP C	330PF	K	89
C201			CE04KW1H100M	ELECTRO	10UF	50WV	9

L : Scandinavia **K :** USA **P :** Canada **R :** Mexico **C :** China **I :** Malaysia
Y : PX(Far East,Hawaii) **T :** England **E :** Europe **G :** Germany **V :** China(Shanghai)
Y : AAFES(Europe) **X :** Australia **Q :** Russia **H :** Korea **M :** Other Areas ⚠ indicates safety critical components .

✻ New Parts
Parts without **Parts No.** are not supplied.
Les articles non mentionnes dans le **Parts No.** ne sont pas fournis.
Teile ohne **Parts No.** werden nicht geliefert.

⑲

Ref. No	Address	New Parts	Parts No.	Description			Destination	Remarks
C202			CK45FF1H103Z	CERAMIC	0.010UF	Z	9	
C203			CQ93FMG1H683J	MYLAR	0.068UF	J	9	
C205,206			CK45FF1H103Z	CERAMIC	0.010UF	Z	9	
C207			CE04KW1A101M	ELECTRO	100UF	10WV	9	
C208			CE04KW1A221M	ELECTRO	220UF	10WV	9	
C209			CK45FF1H103Z	CERAMIC	0.010UF	Z	9	
C210			CC45FSL1H221J	CERAMIC	220PF	J	9	
C211-213			CC45FSL1H101J	CERAMIC	100PF	J	9	
C214,215			CK45FF1H103Z	CERAMIC	0.010UF	Z	9	
C216			CE04KW1H010M	ELECTRO	1.0UF	50WV	9	
C291			CE04KW2A101M	ELECTRO	100UF	100WV	7	
C292			CC73GCH1H180J	CHIP C	18PF	J	7	
C301-310			CC45FSL1H221J	CERAMIC	220PF	J	89	
C311-313			CK45FB1H332K	CERAMIC	3300PF	K	89	
C315-317			CC45FSL1H101J	CERAMIC	100PF	J	89	
C401-406			CE04KW1H220M	ELECTRO	22UF	50WV	89	
C407-412			CK45FB1H471K	CERAMIC	470PF	K	89	
C419			CE04KW1E221M	ELECTRO	220UF	25WV	89	
C420			CE04KW1E101M	ELECTRO	100UF	25WV	89	
C425,426			CC45FSL1H101J	CERAMIC	100PF	J	89	
C427-430			CC45FCH1H100D	CERAMIC	10PF	D	89	
C431-436			CE04KW1E470M	ELECTRO	47UF	25WV	89	
C437,438			CE04HW1E220M	NP-ELEC	22UF	25WV	89	
C439			CE04KW1E470M	ELECTRO	47UF	25WV	89	
C440			CE04KW1H100M	ELECTRO	10UF	50WV	89	
C441,442			CE04KW1A101M	ELECTRO	100UF	10WV	89	
C443-446			CE04KW1H220M	ELECTRO	22UF	50WV	89	
C447			CE04KW1H100M	ELECTRO	10UF	50WV	89	
C448			CE04KW2A3R3M	ELECTRO	3.3UF	100WV	89	
C449,450			CE04KW1H220M	ELECTRO	22UF	50WV	89	
C451			CE04KW1E221M	ELECTRO	220UF	25WV	89	
C452			CE04KW1H220M	ELECTRO	22UF	50WV	89	
C453,454			CK45FB1H471K	CERAMIC	470PF	K	89	
C457			CQ93FMG1H392J	MYLAR	3900PF	J	89	
C458			CC45FCH1H100D	CERAMIC	10PF	D	89	
C459			CC73GCH1H470J	CHIP C	47PF	J	89	
C536			CK73GB1H182K	CHIP C	1800PF	K		
C538			CK73GB1H102K	CHIP C	1000PF	K		
C540			CE04KW1H220M	ELECTRO	22UF	50WV		
C544,545			CK73GB1H103K	CHIP C	0.010UF	K		
C600			CE04KW1H100M	ELECTRO	10UF	50WV		
C601-606			CC45FSL1H470J	CERAMIC	47PF	J		
C607			CC45FSL1H470J	CERAMIC	47PF	J	89	
C608-611			CE04KW1E470M	ELECTRO	47UF	25WV		
C612			CE04KW1A101M	ELECTRO	100UF	10WV		
C613-615			CE04KW1V330M	ELECTRO	33UF	35WV		
C616			CE04KW1E470M	ELECTRO	47UF	25WV		
C617			CK73GB1H103K	CHIP C	0.010UF	K		
C618			CE04KW1H100M	ELECTRO	10UF	50WV		
C619			CE04KW1V330M	ELECTRO	33UF	35WV		
C620			CE04KW1H100M	ELECTRO	10UF	50WV		
C621			CK73GF1H104Z	CHIP C	0.10UF	Z		
C622			CE04KW1V330M	ELECTRO	33UF	35WV		
C625			CE04KW1H0R1M	ELECTRO	0.1UF	50WV		
C626,627			CK73FF1C105Z	CHIP C	1.0UF	Z		

L : Scandinavia **K :** USA **P :** Canada **R :** Mexico **C :** China **I :** Malaysia
Y : PX(Far East,Hawaii) **T :** England **E :** Europe **G :** Germany **V :** China(Shanghai)
Y : AAFES(Europe) **X :** Australia **Q :** Russia **H :** Korea **M :** Other Areas ⚠ indicates safety critical components .

✻ New Parts
Parts without **Parts No.** are not supplied.
Les articles non mentionnes dans le **Parts No.** ne sont pas fournis.
Teile ohne **Parts No.** werden nicht geliefert.

⑳

Ref. No	Address	New Parts	Parts No.	Description			Destination	Remarks
C651-662			CC45FSL1H470J	CERAMIC	47PF	J		
C663			CK45FF1H103Z	CERAMIC	0.010UF	Z		
C664			CE04KW1E470M	ELECTRO	47UF	25WV		
C665			CK45FF1H103Z	CERAMIC	0.010UF	Z		
C666			CE04KW1E470M	ELECTRO	47UF	25WV		
C667			CK45FF1H103Z	CERAMIC	0.010UF	Z		
C668			CE04KW1E470M	ELECTRO	47UF	25WV		
C669			CK45FF1H103Z	CERAMIC	0.010UF	Z		
C670,671			CE04KW1E470M	ELECTRO	47UF	25WV		
C672			CK45FF1H103Z	CERAMIC	0.010UF	Z		
C673			CE04KW1E470M	ELECTRO	47UF	25WV		
C674-677			CE04KW1H100M	ELECTRO	10UF	50WV		
C681			CE04KW1A471M	ELECTRO	470UF	10WV		
C682			CK73GB1C104K	CHIP C	0.10UF	K		
C693			CC45FSL1H101J	CERAMIC	100PF	J		
C694			CK45FF1H103Z	CERAMIC	0.010UF	Z	79	
C699			CK73GF1H104Z	CHIP C	0.10UF	Z		
C702-705			CE04KW1H3R3M	ELECTRO	3.3UF	50WV	89	
C706,707			CC45FSL1H331J	CERAMIC	330PF	J	89	
C708,709			CK45FB1H222K	CERAMIC	2200PF	K	89	
C710,711			CC45FCH1H050C	CERAMIC	5.0PF	C	89	
C712			CC45FSL1H221J	CERAMIC	220PF	J	89	
C713			CC45FSL1H101J	CERAMIC	100PF	J	89	
C714,715			CE04KW1A221M	ELECTRO	220UF	10WV	89	
C716,717			CC45FCH1H150J	CERAMIC	15PF	J	89	
C718,719			CC45FSL1H151J	CERAMIC	150PF	J	89	
C720			CK45FB1H102K	CERAMIC	1000PF	K	89	
C721			CK45FB1H561K	CERAMIC	560PF	K	89	
C722			CE04KW1H220M	ELECTRO	22UF	50WV	89	
C724,725			CC45FSL2H470J	CERAMIC	47PF	J	89	
C728			CK45FF1H472Z	CERAMIC	4700PF	Z	89	
C730			C91-1573-05	MP-C	0.10UF	J	9	
C730			C91-1577-05	MP-C	0.22UF	J	8	
C732			C91-1577-05	MP-C	0.22UF	J	8	
C733			CC45FSL1H101J	CERAMIC	100PF	J	89	
C734			CK45FF1H103Z	CERAMIC	0.010UF	Z	89	
CN11		✻	E41-0947-05	PIN ASSY				
CN12		✻	E41-0932-05	PIN ASSY				
CN65		✻	E41-0930-05	PIN ASSY				
CN67			E41-0927-05	PIN ASSY				
CN68			E41-0929-05	PIN ASSY				
CN151		✻	E41-0949-05	PIN ASSY			89	
CN201			E41-0928-05	PIN ASSY			7	
CN301			E40-8484-05	FLAT CABLE CONNECTOR			89	
CN302		✻	E41-1011-05	PIN ASSY			89	
CN303			E41-0929-05	PIN ASSY			89	
CN304		✻	E41-1010-05	PIN ASSY			89	
CN702		✻	E41-1018-05	PIN ASSY			89	
CN703		✻	E41-1009-05	PIN ASSY			89	
CN704			E41-0929-05	PIN ASSY			89	
CN705		✻	E40-4671-15	SOCKET FOR PIN ASSY			89	
CN706			E40-4871-05	PIN ASSY			89	
CN707		✻	E41-1010-05	PIN ASSY			89	
J61 ,62			E63-1253-05	PIN JACK				

L : Scandinavia **K :** USA **P :** Canada **R :** Mexico **C :** China **I :** Malaysia
Y : PX(Far East,Hawaii) **T :** England **E :** Europe **G :** Germany **V :** China(Shanghai)
Y : AAFES(Europe) **X :** Australia **Q :** Russia **H :** Korea **M :** Other Areas ⚠ indicates safety critical components .

✻ New Parts
Parts without **Parts No.** are not supplied.
Les articles non mentionnes dans le **Parts No.** ne sont pas fournis.
Teile ohne **Parts No.** werden nicht geliefert.

(21)

Ref. No	Address	New Parts	Parts No.	Description				Destination	Remarks
J63			E63-1252-05	PIN JACK				89	
J65 -67			E56-0040-05	CYLINDRICAL RECEPTACLE					
J101			E63-1249-05	PIN JACK					
J102,103			E63-1250-05	PIN JACK					
J201			E11-0389-05	3.5D PHONE JACK(3.5 STEREO BL)				9	
J202			E11-0291-05	3.5D PHONE JACK(2P)				9	
J302			E63-1246-05	PIN JACK				89	
J303			E63-1248-05	PIN JACK				89	
J502		✻	E70-0192-05	SCREW TERMINAL BOARD				89	
WH61		✻	E82-6522-04	FINISHED WIRE					
WH62		✻	E35-3653-05	WIRING HARNESS					
WH63		✻	E35-3705-05	WIRING HARNESS					
WH64		✻	E35-3706-05	WIRING HARNESS					
WH65		✻	E35-3707-05	WIRING HARNESS					
WH303		✻	E35-3696-05	WIRING HARNESS				89	
WH701		✻	E35-3659-05	WIRING HARNESS				89	
WH704		✻	E35-3658-05	WIRING HARNESS				89	
L201			L40-1011-58	SMALL FIXED INDUCTOR(100UH,K)				9	
L202			L92-0017-05	FERRITE CORE				9	
L502			L76-0018-05	DELAY LINE				79	
L503			L76-0019-05	DELAY LINE				8	
L504			L79-1262-05	LC FILTER				8	
L702			L39-0085-05	PHASE COMPENSATION COIL				89	
⚠ R205			RD14BB2C101J	RD	100	J	1/6W	9	
R213,214			RD14NB2E471J	RD	470	J	1/4W	9	
R217			RD14NB2E471J	RD	470	J	1/4W	9	
R291			RD14NB2E471J	RD	470	J	1/4W	7	
R292			RK73GB1J472J	CHIP R	4.7K	J	1/16W	7	
⚠ R425			RD14NB2E561J	RD	560	J	1/4W	89	
R434			RD14NB2E150J	RD	15	J	1/4W	89	
⚠ R450			RD14NB2E561J	RD	560	J	1/4W	89	
⚠ R451			RD14NB2E102J	RD	1.0K	J	1/4W	89	
R452			RD14NB2E150J	RD	15	J	1/4W	89	
R529			RK73GB1J103J	CHIP R	10K	J	1/16W		
R530			RK73GB1J223J	CHIP R	22K	J	1/16W		
R532			RK73GB1J332J	CHIP R	3.3K	J	1/16W		
R534			RK73GB1J562J	CHIP R	5.6K	J	1/16W		
R536			RK73GB1J103J	CHIP R	10K	J	1/16W		
R539			RK73GB1J223J	CHIP R	22K	J	1/16W		
R540			RK73GB1J103J	CHIP R	10K	J	1/16W		
R542			RK73GB1J104J	CHIP R	100K	J	1/16W		
R545			RK73GB1J101J	CHIP R	100	J	1/16W		
R546			RK73GB1J474J	CHIP R	470K	J	1/16W		
R549			RK73GB1J183J	CHIP R	18K	J	1/16W		
R550			RK73GB1J103J	CHIP R	10K	J	1/16W		
R552			RK73GB1J363J	CHIP R	36K	J	1/16W		
R554			RK73GB1J103J	CHIP R	10K	J	1/16W		
R556			RK73GB1J472J	CHIP R	4.7K	J	1/16W		
R561,562			RK73GB1J104J	CHIP R	100K	J	1/16W		
R563,564			RK73GB1J102J	CHIP R	1.0K	J	1/16W		
R600			RK73GB1J101J	CHIP R	100	J	1/16W		
R611,612			RK73GB1J101J	CHIP R	100	J	1/16W		
R613			RK73GB1J105J	CHIP R	1.0M	J	1/16W		

L : Scandinavia **K :** USA **P :** Canada **R :** Mexico **C :** China **I :** Malaysia
Y : PX(Far East,Hawaii) **T :** England **E :** Europe **G :** Germany **V :** China(Shanghai)
Y : AAFES(Europe) **X :** Australia **Q :** Russia **H :** Korea **M :** Other Areas ⚠ indicates safety critical components .

✻ New Parts
Parts without **Parts No.** are not supplied.
Les articles non mentionnes dans le **Parts No.** ne sont pas fournis.
Teile ohne **Parts No.** werden nicht geliefert.

(22)

Ref. No	Address	New Parts	Parts No.	Description				Destination	Remarks
⚠ R617			RS14KB3A150J	FL-PROOF RS	15	J	1W		
R621-623			RK73GB1J104J	CHIP R	100K	J	1/16W		
⚠ R624			RS14KB3A150J	FL-PROOF RS	15	J	1W		
R667			RK73GB1J104J	CHIP R	100K	J	1/16W		
⚠ R671			RS14KB3A150J	FL-PROOF RS	15	J	1W		
⚠ R674			RS14KB3A470J	FL-PROOF RS	47	J	1W		
R695			RK73GB1J101J	CHIP R	100	J	1/16W		
R699			RK73GB1J105J	CHIP R	1.0M	J	1/16W		
R723,724			RD14NB2E221J	RD	220	J	1/4W	89	
R725,726			RD14NB2E562J	RD	5.6K	J	1/4W	89	
R727,728			RD14NB2E331J	RD	330	J	1/4W	89	
R729,730			RD14NB2E221J	RD	220	J	1/4W	89	
R746			RD14NB2E330J	RD	33	J	1/4W	89	
R748			RS14KB3D4R7J	FL-PROOF RS	4.7	J	2W	89	
R752			RS14KB3D182J	FL-PROOF RS	1.8K	J	2W	89	
R756			RD14NB2E470J	RD	47	J	1/4W	89	
R758			RD14NB2E470J	RD	47	J	1/4W	89	
R760			RD14NB2E271J	RD	270	J	1/4W	89	
VR702			R32-0030-05	SEMI FIXED VARIABLE RESISTOR				89	
W1 -10			R92-1252-05	CHIP R	0 OHM	J	1/6W		
W70 -76			R92-1252-05	CHIP R	0 OHM	J	1/6W		
K702			S76-0098-05	MAGNETIC RELAY				89	
D101			MTZJ10(B)	ZENER DIODE					
D101			RD10ES(B)	ZENER DIODE					
D155-157			MTZJ7.5(B)	ZENER DIODE				89	
D155-157			RD7.5JS(B)	ZENER DIODE				89	
D201-205			HSS104A	DIODE				9	
D201-205			1SS133	DIODE				9	
⚠ D206			HSS104A	DIODE				9	
⚠ D206			1SS133	DIODE				9	
D291			MTZJ20(B)	ZENER DIODE				7	
D292			MTZJ30(B)	ZENER DIODE				7	
D401			MTZJ3.9(B)	ZENER DIODE				89	
D401			RD3.9ES(B)	ZENER DIODE				89	
D402			MTZJ5.1(B)	ZENER DIODE				89	
D402			RD5.1ES(B)	ZENER DIODE				89	
D503			DA204U	DIODE					
D503			1SS302	DIODE					
D652			HSS104A	DIODE					
D652			1SS133	DIODE					
D655,656			MTZJ5.6(B)	ZENER DIODE					
D655,656			RD5.6ES(B)	ZENER DIODE					
D701-704			HSS104A	DIODE				89	
D701-704			1SS133	DIODE				89	
D706			1SS244	DIODE				89	
D708			HSS104A	DIODE				89	
D708			1SS133	DIODE				89	
D710			HSS104A	DIODE				89	
D710			1SS133	DIODE				89	
IC3			BU4066BC	ANALOGUE IC				89	
IC6			NJM4580D-D	IC(OP AMP X2)				89	
IC11		✻	NJM2585M	ANALOGUE IC					
IC65			LA79510M	ANALOGUE IC					

L : Scandinavia **K :** USA **P :** Canada **R :** Mexico **C :** China **I :** Malaysia
Y : PX(Far East,Hawaii) **T :** England **E :** Europe **G :** Germany **V :** China(Shanghai)
Y : AAFES(Europe) **X :** Australia **Q :** Russia **H :** Korea **M :** Other Areas ⚠ indicates safety critical components .

✻ New Parts
Parts without **Parts No.** are not supplied.
Les articles non mentionnes dans le **Parts No.** ne sont pas fournis.
Teile ohne **Parts No.** werden nicht geliefert.

Ref. No	Address	New Parts	Parts No.	Description	Destination	Remarks
IC66		✻	NJM2284V	ANALOGUE IC		
IC68,69		✻	NJM2575	ANALOGUE IC		
⚠ IC201			BA05T	ANALOGUE IC	9	
IC401-404			NJM4580D-D	IC(OP AMP X2)	89	
IC507			NJM4565M	ANALOGUE IC		
IC508			BA7623F	ANALOGUE IC		
⚠ Q65			2SD2525	TRANSISTOR		
⚠ Q66			2SB1640	TRANSISTOR		
Q101			2SC2003(L,K)	TRANSISTOR		
Q158,159			DTC124ESA	DIGITAL TRANSISTOR	89	
Q158,159			KRC103M	DIGITAL TRANSISTOR	89	
Q158,159			UN4212	DIGITAL TRANSISTOR	89	
Q201			DTC124ESA	DIGITAL TRANSISTOR	9	
Q201			KRC103M	DIGITAL TRANSISTOR	9	
Q201			UN4212	DIGITAL TRANSISTOR	9	
Q202,203			KTC3199(Y,GR)	TRANSISTOR	9	
Q202,203			2SC1740S(Q,R)	TRANSISTOR	9	
Q202,203			2SC2785(F,E)	TRANSISTOR	9	
Q204			KTA1267(Y,GR)	TRANSISTOR	9	
Q204			2SA1175(F,E)	TRANSISTOR	9	
Q204			2SA933AS(Q,R)	TRANSISTOR	9	
⚠ Q299			2SD2012	TRANSISTOR	7	
Q301-320			2SC2878(B)	TRANSISTOR	89	
Q401,402			DTA124ESA	DIGITAL TRANSISTOR	89	
Q401,402			KRA103M	DIGITAL TRANSISTOR	89	
Q401,402			UN4112	DIGITAL TRANSISTOR	89	
Q403-408			2SC2878(B)	TRANSISTOR	89	
Q409			DTA124ESA	DIGITAL TRANSISTOR	89	
Q409			KRA103M	DIGITAL TRANSISTOR	89	
Q409			UN4112	DIGITAL TRANSISTOR	89	
Q411,412			2SC2878(B)	TRANSISTOR	89	
Q501,502			2SC4213(B)	TRANSISTOR		
Q512			2SC4081(R,S)	TRANSISTOR		
Q512			2SD1819A(Q,R)	TRANSISTOR		
Q701,702			2SC2878(B)	TRANSISTOR	89	
Q703-706			2SA992(F,E)	TRANSISTOR	89	
Q707,708			2SC2631(R,S)	TRANSISTOR	89	
Q709,710			2SA1123(R,S)	TRANSISTOR	89	
Q711,712			2SC2631(R,S)	TRANSISTOR	89	
Q714			2SC1845(F,E)	TRANSISTOR	89	
Q716			KTC3200	TRANSISTOR	89	
⚠ Q718			TRAIT8N*5	TRANSISTOR	89	
⚠ Q720			TRAIT8P*5	TRANSISTOR	89	
DISPLAY (X14-7780-10)						
D734			B30-2545-05	LED(RED3(160))		
D741-745			B30-2545-05	LED(RED3(160))	79Y1X1	
D741-752			B30-2651-05	LED(RED,D3,40DEG,)	E1E2	
D746-752			B30-2567-05	LED(RED(80) HI-BR)		
D746-752			B30-2651-05	LED(RED,D3,40DEG,)	79Y1X1	
D753			B30-2545-05	LED(RED3(160))		
D754			B30-2567-05	LED(RED(80) HI-BR)		
D754			B30-2651-05	LED(RED,D3,40DEG,)		
D755			B30-2545-05	LED(RED3(160))	79Y1X1	
D755			B30-2651-05	LED(RED,D3,40DEG,)	E1E2	

L : Scandinavia **K :** USA **P :** Canada **R :** Mexico **C :** China **I :** Malaysia
Y : PX(Far East,Hawaii) **T :** England **E :** Europe **G :** Germany **V :** China(Shanghai)
Y : AAFES(Europe) **X :** Australia **Q :** Russia **H :** Korea **M :** Other Areas ⚠ indicates safety critical components .

✻ New Parts
Parts without **Parts No.** are not supplied.
Les articles non mentionnes dans le **Parts No.** ne sont pas fournis.
Teile ohne **Parts No.** werden nicht geliefert.

Ref. No	Address	New Parts	Parts No.	Description			Destination	Remarks
C101			CC45FSL1H101J	CERAMIC	100PF	J		
C103			CK73GB1H103K	CHIP C	0.010UF	K		
C104			CC73GCH1H101J	CHIP C	100PF	J		
C105			CC45FCH1H101J	CERAMIC	100PF	J	E1E2	
C401			CK45FE2H103P	CERAMIC	0.010UF	P		
C402			CE04KW1E222M	ELECTRO	2200UF	25WV		
C403			CE04KW1E102M	ELECTRO	1000UF	25WV		
C404-407			CK73GB1H103K	CHIP C	0.010UF	K		
C408,409			CE04KW1E470M	ELECTRO	47UF	25WV		
C410			CC73GCH1H680J	CHIP C	68PF	J		
C411			CC73GCH1H820J	CHIP C	82PF	J		
C451			CK45FF1H103Z	CERAMIC	0.010UF	Z		
C452			CQ93FMG1H104J	MYLAR	0.10UF	J	79	
C452			CQ93FMG1H393J	MYLAR	0.039UF	J	E1E2	
C452			CQ93FMG1H473J	MYLAR	0.047UF	J	X1	
C452			CQ93FMG1H683J	MYLAR	0.068UF	J	Y1	
C453			CE04KW1C332M	ELECTRO	3300UF	16WV	79	
C453			CE04KW1E332M	ELECTRO	3300UF	25WV	8	
C454			CE04LW1H100M	ELECTRO	10UF	50WV		
C455			CE04LW0J222M	ELECTRO	2200UF	6.3WV	Y1	
C456,457			CK45FF1H103Z	CERAMIC	0.010UF	Z		
C458			CE04LW1H100M	ELECTRO	10UF	50WV		
C459			CE04LW1H010M	ELECTRO	1.0UF	50WV		
C501-504			CC45FCH1H101J	CERAMIC	100PF	J		
C505,506			CK45FB1H102K	CERAMIC	1000PF	K		
C507,508			CC45FCH1H101J	CERAMIC	100PF	J		
C509			CK45FB1H471K	CERAMIC	470PF	K		
C510			CC73GCH1H101J	CHIP C	100PF	J		
C511			CC45FCH1H101J	CERAMIC	100PF	J		
C701			CC73GCH1H221J	CHIP C	220PF	J		
C702			CE04LW1H101M	ELECTRO	100UF	50WV		
C703,704			CC73GCH1H102J	CHIP C	1000PF	J		
C705			CC73GCH1H181J	CHIP C	180PF	J		
C741			CK73EF1E105Z	CHIP C	1.0UF	Z		
C761,762			CK73GB1H103K	CHIP C	0.010UF	K		
C763,764			CK45FF1H103Z	CERAMIC	0.010UF	Z		
C765,766			CK73GB1H103K	CHIP C	0.010UF	K		
C777			CK45FB1H102K	CERAMIC	1000PF	K		
C778			CC45FCH1H101J	CERAMIC	100PF	J		
C779			CE04LW1A101M	ELECTRO	100UF	10WV		
C780			CC73GCH1H270J	CHIP C	27PF	J		
C791			CE04RW0J470M	ELECTRO	47UF	6.3WV		
C792			CE04LW1H220M	ELECTRO	22UF	50WV		
C793,794			CK45FF1H103Z	CERAMIC	0.010UF	Z		
C811			CK45FF1H103Z	CERAMIC	0.010UF	Z	E1E2	
C812,813			CC45FCH1H270J	CERAMIC	27PF	J	E1E2	
C814			CC45FCH1H101J	CERAMIC	100PF	J	E1E2	
C815			CE04LW1E470M	ELECTRO	47UF	25WV	E1E2	
C816			CK45FB1H561K	CERAMIC	560PF	K	E1E2	
C817			CK45FF1H103Z	CERAMIC	0.010UF	Z	E1E2	
C818			CC45FSL1H271J	CERAMIC	270PF	J	E1E2	
C819			CE04LW1H2R2M	ELECTRO	2.2UF	50WV	E1E2	
C831			CK45FF1H103Z	CERAMIC	0.010UF	Z	Y1	
C832			CE04LW1H2R2M	ELECTRO	2.2UF	50WV	Y1	
C833			CK45FF1H103Z	CERAMIC	0.010UF	Z	Y1	

L : Scandinavia **K :** USA **P :** Canada **R :** Mexico **C :** China **I :** Malaysia
Y : PX(Far East,Hawaii) **T :** England **E :** Europe **G :** Germany **V :** China(Shanghai)
Y : AAFES(Europe) **X :** Australia **Q :** Russia **H :** Korea **M :** Other Areas ⚠ indicates safety critical components .

✻ New Parts
Parts without **Parts No.** are not supplied.
Les articles non mentionnes dans le **Parts No.** ne sont pas fournis.
Teile ohne **Parts No.** werden nicht geliefert.

㉕

Ref. No	Address	New Parts	Parts No.	Description			Destination	Remarks
C841			CE04EW0J102M	ELECTRO	1000UF	6.3WV	79	
C842			C90-1826-05	BACKUP-C	0.047F	5.5WV	8	
C843			CE04LW1H010M	ELECTRO	1.0UF	50WV		
C844			CK45FF1H103Z	CERAMIC	0.010UF	Z		
C845			CK73GB1H103K	CHIP C	0.010UF	K		
C851			CE04LW1H100M	ELECTRO	10UF	50WV		
C852-855			CC45FSL1H221J	CERAMIC	220PF	J		
C856,857			CK45FF1H103Z	CERAMIC	0.010UF	Z		
C858			CE04LW1A101M	ELECTRO	100UF	10WV		
C907			CK73GB1H103K	CHIP C	0.010UF	K		
C908			CK45FF1H103Z	CERAMIC	0.010UF	Z		
C909			CK73GB1H103K	CHIP C	0.010UF	K	Y1	
CN1			E40-8386-05	PIN ASSY			Y1	
CN41			E40-3261-05	PIN ASSY				
CN45			E40-4245-05	PIN ASSY				
CN46			E40-4632-05	PIN ASSY			8	
CN47			E40-4245-05	PIN ASSY			X1E1E2	
CN47			E40-4245-05	PIN ASSY			79	
CN48			E40-4428-05	PIN ASSY			Y1	
CN49			E40-3246-05	PIN ASSY				
CN50			E40-3251-05	PIN ASSY				
CN70			E40-3261-05	PIN ASSY				
CN80			E40-3261-05	PIN ASSY				
⚠ J2			E03-0396-05	AC OUTLET			79Y1	
⚠ J3			E03-0398-05	AC OUTLET			E1E2	
⚠ J5			E03-0325-05	AC OUTLET			X1	
J20			E63-1251-05	PIN JACK				
J21			E56-0033-05	CYLINDRICAL RECEPTACLE				
WH1		✻	E35-2554-05	WIRING HARNESS			Y1	
WH5		✻	E35-2167-05	WIRING HARNESS			8	
WH20		✻	E35-3159-15	WIRING HARNESS				
WH20		✻	E35-3445-05	WIRING HARNESS				
WH20		✻	E35-3521-05	WIRING HARNESS				
WH42		✻	E35-3158-25	WIRING HARNESS				
WH42		✻	E35-3444-05	WIRING HARNESS				
WH42		✻	E35-3525-05	WIRING HARNESS				
WH70		✻	E35-2560-05	WIRING HARNESS				
WH70		✻	E35-3513-05	WIRING HARNESS				
WH78		✻	E35-3149-15	WIRING HARNESS				
WH78		✻	E35-3435-05	WIRING HARNESS				
WH78		✻	E35-3519-05	WIRING HARNESS				
WH80		✻	E35-3251-05	WIRING HARNESS				
WH80		✻	E35-3446-05	WIRING HARNESS				
WH80		✻	E35-3516-05	WIRING HARNESS				
WH86		✻	E35-3405-05	LEAD WIRE			E1E2	
WH87		✻	E35-3150-15	WIRING HARNESS				
WH87		✻	E35-3436-05	WIRING HARNESS				
WH87		✻	E35-3520-05	WIRING HARNESS				
WH88		✻	E35-3151-15	WIRING HARNESS				
WH88		✻	E35-3437-05	WIRING HARNESS				
WH88		✻	E35-3512-05	WIRING HARNESS				
WH89		✻	E35-3152-15	WIRING HARNESS				
WH89		✻	E35-3438-05	WIRING HARNESS				
WH89		✻	E35-3524-05	WIRING HARNESS				

L : Scandinavia **K :** USA **P :** Canada **R :** Mexico **C :** China **I :** Malaysia
Y : PX(Far East,Hawaii) **T :** England **E :** Europe **G :** Germany **V :** China(Shanghai)
Y : AAFES(Europe) **X :** Australia **Q :** Russia **H :** Korea **M :** Other Areas ⚠ indicates safety critical components .

✻ New Parts
Parts without **Parts No.** are not supplied.
Les articles non mentionnes dans le **Parts No.** ne sont pas fournis.
Teile ohne **Parts No.** werden nicht geliefert.

㉖

Ref. No	Address	New Parts	Parts No.	Description				Destination	Remarks
WH90		✻	E35-3345-05	WIRING HARNESS					
WH90		✻	E35-3447-05	WIRING HARNESS					
WH90		✻	E35-3527-05	WIRING HARNESS					
WH91		✻	E35-3154-25	WIRING HARNESS					
WH91		✻	E35-3440-05	WIRING HARNESS					
WH91		✻	E35-3517-05	WIRING HARNESS					
WH92		✻	E35-3153-15	WIRING HARNESS					
WH92		✻	E35-3439-05	WIRING HARNESS					
WH92		✻	E35-3518-05	WIRING HARNESS					
WH93		✻	E35-3155-25	WIRING HARNESS					
WH93		✻	E35-3441-05	WIRING HARNESS					
WH93		✻	E35-3523-05	WIRING HARNESS					
WH94		✻	E35-3156-15	WIRING HARNESS					
WH94		✻	E35-3442-05	WIRING HARNESS					
WH94		✻	E35-3526-05	WIRING HARNESS					
⚠ F1			F05-4025-05	FUSE (SEMKO) (250V T4A L)				8	
⚠ F1			F50-0078-05	FUSE(5X20)				79	
⚠ F2			F06-1022-05	FUSE (SEMKO) (250V T1AL)				8	
⚠ F3			F05-4025-05	FUSE (SEMKO) (250V T4A L)				Y1	
CN3 ,4			J13-0075-05	FUSE CLIP				Y1	
CN11,12			J13-0075-05	FUSE CLIP					
CN21,22			J13-0075-05	FUSE CLIP				8	
⚠ T1			L07-2758-05	POWER TRANSFORMER				X1	
⚠ T1			L07-2761-05	POWER TRANSFORMER				E1E2	
⚠ T1			L07-2805-05	POWER TRANSFORMER				Y1	
⚠ T1			L07-2809-05	POWER TRANSFORMER				79	
X701			L78-0725-05	RESONATOR (8.38MHZ)					
X811			L77-2002-05	CRYSTAL RESONATOR(4.332MHZ)				E1E2	
R120			RK73GB1J102J	CHIP R	1.0K	J	1/16W		
⚠ R410			RS14KB3D181J	FL-PROOF RS	180	J	2W		
⚠ R453			RD14NB2E1R0J	RD	1	J	1/4W		
⚠ R454			RD14NB2E150J	RD	15	J	1/4W	Y1	
⚠ R454			RD14NB2E270J	RD	27	J	1/4W	X1E1E2	
⚠ R454			RD14NB2E270J	RD	27	J	1/4W	79	
⚠ R457			R92-1844-05	CARBON	3.3M	J	1/2W	79	
⚠ R458			RD14NB2E120J	RD	12	J	1/4W	Y1	
R776			RD14NB2E100J	RD	10	J	1/4W		
R779			RK73GB1J333J	CHIP R	33K	J	1/16W		
R780			RD14NB2E100J	RD	10	J	1/4W		
R782			RK73GB1J303J	CHIP R	30K	J	1/16W		
R801,802			RK73GB1J331J	CHIP R	330	J	1/16W		
R803			RK73GB1J104J	CHIP R	100K	J	1/16W		
R805			RK73GB1J104J	CHIP R	100K	J	1/16W		
R807,808			RK73GB1J103J	CHIP R	10K	J	1/16W		
R834			RD14NB2E102J	RD	1.0K	J	1/4W	Y1	
R894			RK73GB1J101J	CHIP R	100	J	1/16W		
R896-898			RK73GB1J101J	CHIP R	100	J	1/16W		
R910,911			RK73GB1J104J	CHIP R	100K	J	1/16W		
R922-924			RK73GB1J101J	CHIP R	100	J	1/16W		
R926			RK73GB1J101J	CHIP R	100	J	1/16W		
R935			RK73GB1J101J	CHIP R	100	J	1/16W		
R938,939			RK73GB1J101J	CHIP R	100	J	1/16W		
R951,952			RK73GB1J104J	CHIP R	100K	J	1/16W		

L : Scandinavia **K :** USA **P :** Canada **R :** Mexico **C :** China **I :** Malaysia
Y : PX(Far East,Hawaii) **T :** England **E :** Europe **G :** Germany **V :** China(Shanghai)
Y : AAFES(Europe) **X :** Australia **Q :** Russia **H :** Korea **M :** Other Areas ⚠ indicates safety critical components .

✻ New Parts
Parts without **Parts No.** are not supplied.
Les articles non mentionnes dans le **Parts No.** ne sont pas fournis.
Teile ohne **Parts No.** werden nicht geliefert.

(27)

Ref. No	Address	New Parts	Parts No.	Description				Destination	Remarks
R967-969			RK73GB1J104J	CHIP R	100K	J	1/16W		
R970			RK73GB1J153J	CHIP R	15K	J	1/16W		
R971,972			RK73GB1J104J	CHIP R	100K	J	1/16W		
R977			RK73GB1J123J	CHIP R	12K	J	1/16W	Y1	
R977			RK73GB1J273J	CHIP R	27K	J	1/16W	E1E2	
R977			RK73GB1J472J	CHIP R	4.7K	J	1/16W	X1	
R993			RK73GB1J101J	CHIP R	100	J	1/16W		
⚠ R997			RD14NB2E1R0J	RD	1	J	1/4W		
W999			R92-0679-05	CHIP R	0 OHM				
⚠ K451			S76-0107-05	MAGNETIC RELAY				79	
⚠ K451			S76-0110-05	MAGNETIC RELAY				8	
⚠ S1			S62.1.5	SLIDE SWITCH				Y1	
⚠ S2			S68-0142-05	PUSH SWITCH				8	
S701-725			S70-0086-05	TACT SWITCH					
S731-733			S70-0086-05	TACT SWITCH					
S761,762			T99-0663-05	ROTARY ENCODER					
S763			T99-0664-05	ROTARY ENCODER					
⚠ D401			D2SBA20F03	DIODE					
D451,452			1SS133	DIODE					
⚠ D453			S1ZB20(4101)	DIODE					
D454			1SS133	DIODE					
D455			RB721Q	DIODE					
D501-504			1SS133	DIODE					
D776			MTZJ5.1(B)	ZENER DIODE					
D776			RD5.1ES(B)	ZENER DIODE					
⚠ D791			1SS133	DIODE					
D801-806			1SS133	DIODE					
D831			1SS133	DIODE				Y1	
⚠ D841			RB721Q	DIODE					
D842			1SS133	DIODE					
⚠ D843			RB721Q	DIODE					
D844			1SS133	DIODE					
D846			1SS133	DIODE					
D961-964			1SS133	DIODE					
ED78			HNA-16MM36T	FLUORESCENT INDICATOR TUBE					
⚠ IC45			BA05T	ANALOGUE IC					
IC74			BU2090	ANALOGUE IC					
IC78			LC75711NED	MOS-IC					
⚠ IC79			XC6202P502PR	ANALOGUE IC					
IC81			BU1923	ANALOGUE IC				E1E2	
IC83			S-80840CNY	ANALOGUE IC				Y1	
IC84			S-80840CNY	ANALOGUE IC					
IC90		✻	MN101C49HNJ2	MICROCONTROLLER IC				7	
IC90		✻	MN101C49HNK	MICROCONTROLLER IC				89	
⚠ IC401			KIA7812API	ANALOGUE IC					
⚠ IC402			KIA7912PI	ANALOGUE IC					
Q451			KTC3199(Y,GR)	TRANSISTOR					
Q451			2SC1740S(Q,R)	TRANSISTOR					
Q451			2SC2785(F,E)	TRANSISTOR					
Q731			DTC113ZSA	DIGITAL TRANSISTOR					
Q731			UN4219	DIGITAL TRANSISTOR					
Q776			KTC3199(Y,GR)	TRANSISTOR					
Q776			2SC1740S(Q,R)	TRANSISTOR					

L : Scandinavia **K :** USA **P :** Canada **R :** Mexico **C :** China **I :** Malaysia
Y : PX(Far East,Hawaii) **T :** England **E :** Europe **G :** Germany **V :** China(Shanghai)
Y : AAFES(Europe) **X :** Australia **Q :** Russia **H :** Korea **M :** Other Areas ⚠ indicates safety critical components .

✻ New Parts
Parts without **Parts No.** are not supplied.
Les articles non mentionnes dans le **Parts No.** ne sont pas fournis.
Teile ohne **Parts No.** werden nicht geliefert.

(28)

Ref. No	Address	New Parts	Parts No.	Description				Destination	Remarks
Q776			2SC2785(F,E)	TRANSISTOR					
Q777,778			DTC124ESA	DIGITAL TRANSISTOR					
Q777,778			KRC103M	DIGITAL TRANSISTOR					
Q777,778			UN4212	DIGITAL TRANSISTOR					
Q841			KTC3199(Y,GR)	TRANSISTOR					
Q841			2SC1740S(Q,R)	TRANSISTOR					
Q841			2SC2785(F,E)	TRANSISTOR					
Q842			KTA1267(Y,GR)	TRANSISTOR					
Q842			2SA1175(F,E)	TRANSISTOR					
Q842			2SA933AS(Q,R)	TRANSISTOR					
Q843			DTC113ZSA	DIGITAL TRANSISTOR					
Q843			UN4219	DIGITAL TRANSISTOR					
⚠ TH1			MF-R090	THERMISTOR					
A791			W02-2769-05	ELECTRIC CIRCUIT MODULE					

SUB (X25-6620-12) VR-8060

C305,306			CC45FSL1H221J	CERAMIC	220PF	J			
C310			CC45FSL1H221J	CERAMIC	220PF	J			
C311-313			CK45FB1H332K	CERAMIC	3300PF	K			
C315-317			CC45FSL1H101J	CERAMIC	100PF	J			
C406			CE04KW1H220M	ELECTRO	22UF	50WV			
C412			CC45FSL1H221J	CERAMIC	220PF	J			
C419			CE04KW1E221M	ELECTRO	220UF	25WV			
C420			CE04KW1E101M	ELECTRO	100UF	25WV			
C430			CC45FCH1H100D	CERAMIC	10PF	D			
C433,434			CE04KW1E470M	ELECTRO	47UF	25WV			
C438			CE04HW1E220M	NP-ELEC	22UF	25WV			
C440			CE04KW1E470M	ELECTRO	47UF	25WV			
C446			CE04KW1H220M	ELECTRO	22UF	50WV			
C449			CE04KW1H220M	ELECTRO	22UF	50WV			
C450			CE04KW1H4R7M	ELECTRO	4.7UF	50WV			
C451			CE04KW1E221M	ELECTRO	220UF	25WV			
C452			CE04KW1H220M	ELECTRO	22UF	50WV			
C453,454			CC45FSL1H221J	CERAMIC	220PF	J			
C457			CQ93FMG1H392J	MYLAR	3900PF	J			
C458			CC45FCH1H100D	CERAMIC	10PF	D			
C459			CC45FSL1H470J	CERAMIC	47PF	J			
CN301			E40-8483-05	FLAT CABLE CONNECTOR					
CN302			E40-4101-05	PIN ASSY					
CN303			E40-3248-05	PIN ASSY					
CN304			E40-4248-05	PIN ASSY					
J301			E70-0150-05	SCREW TERMINAL BOARD					
J302			E63-0133-15	PIN JACK					
J303			E63-1146-05	PIN JACK					
WH1		✻	E35-3390-05	WIRING HARNESS					
WH1		✻	E35-3514-05	WIRING HARNESS					
WH2		✻	E35-3247-05	WIRING HARNESS					
⚠ R425			RD14NB2E561J	RD	560	J	1/4W		
R434			RD14GB2E150J	FL-PROOF RD	15	J	1/4W		
R452			RD14GB2E150J	FL-PROOF RD	15	J	1/4W		
D401			MTZJ3.9(B)	ZENER DIODE					
D401			RD3.9ES(B)	ZENER DIODE					
IC403			NJM4580D-D	IC(OP AMP X2)					
IC404			NJM4565D-D	IC(OP AMP X2)					

L : Scandinavia **K :** USA **P :** Canada **R :** Mexico **C :** China **I :** Malaysia
Y : PX(Far East,Hawaii) **T :** England **E :** Europe **G :** Germany **V :** China(Shanghai)
Y : AAFES(Europe) **X :** Australia **Q :** Russia **H :** Korea **M :** Other Areas ⚠ indicates safety critical components .

PARTS LIST

Ref. No	Address	New Parts	Parts No.	Description	Destination	Remarks
Q305,306			2SC2878(B)	TRANSISTOR		
Q310			2SC2878(B)	TRANSISTOR		
Q315,316			2SC2878(B)	TRANSISTOR		
Q320			2SC2878(B)	TRANSISTOR		
Q402			DTA124ESA	DIGITAL TRANSISTOR		
Q402			KRA103M	DIGITAL TRANSISTOR		
Q402			UN4112	DIGITAL TRANSISTOR		

✻ New Parts
Parts without **Parts No.** are not supplied.
Les articles non mentionnes dans le **Parts No.** ne sont pas fournis.
Teile ohne **Parts No.** werden nicht geliefert.

L: Scandinavia **K:** USA **P:** Canada **R:** Mexico **C:** China **I:** Malaysia
Y: PX(Far East,Hawaii) **T:** England **E:** Europe **G:** Germany **V:** China(Shanghai)
Y: AAFES(Europe) **X:** Australia **Q:** Russia **H:** Korea **M:** Other Areas ⚠ indicates safety critical components.

Model Name	Model #		ABB.	Surround	Audio	Sub	Display	Sub
VR-8070	Y05-4940-10	K	**K1**	X08-3310-12	X09-6860-10	X13-7940-11	X14-7780-11	-
VR-8070	Y05-4941-01	P	**P1**	X08-3310-12	X09-6860-10	X13-7940-11	X14-7780-11	-
VR-8070-S	Y05-4940-11	K	**K2**	X08-3310-12	X09-6860-10	X13-7940-11	X14-7780-11	-
VR-8070-S	Y05-4941-02	P	**P2**	X08-3310-12	X09-6860-10	X13-7940-11	X14-7780-11	-
KRF-X9080D	Y05-4942-91	y	**Y1**	X08-3312-91	X09-6862-91	X13-7942-91	X14-7782-91	-
KRF-X9080D-S	Y05-4940-71	x	**X1**	X08-3310-71	X09-6862-91	X13-7940-71	X14-7780-71	-
KRF-X9080D	Y05-4942-71	E	**E1**	X08-3312-72	X09-6862-71	X13-7942-71	X14-7782-71	-
KRF-X9080D-S	Y05-4942-72	E	**E2**	X08-3312-72	X09-6862-71	X13-7942-71	X14-7782-71	-
VR-8060-S	Y05-4940-12	K	**K3**	X08-3310-11	X09-6760-13	X13-7940-10	X14-7780-10	X25-6620-12
VR-8060-S	Y05-4940-13	P	**P3**	X08-3310-11	X09-6760-13	X13-7940-10	X14-7780-10	X25-6620-12

HOW TO READ THE PARTS LIST

ABBREVIATION OF MODEL AND MASS PRODUCTION'S DESTINATIONS

MODEL	*ABB.*	*Australia*	*Canada*	*China*	*England*	*Europe*	*Germany*	*Korea*	*Malaysia*
		X	***P***	***-***	***-***	***E***	***-***	***-***	***-***
VR-8070	***9***	-	P1	-	-	-	-	-	-
VR-8070-S	***9***	-	P2	-	-	-	-	-	-
KRF-X9080D	***8***	-	-	-	-	E1	-	-	-
KRF-X9080D-S	***8***	X1	-	-	-	E2	-	-	-
VR-8060	***7***	-	P3	-	-	-	-	-	-

MODEL	*ABB.*	*Mexico*	*PX/AAFES*	*Russia*	*Scandinavia*	*Shanghai*	*USA*	*Other area*	
		-	***Y***	***-***	***-***	***-***	***K***	***-***	
VR-8070	***9***	-	-	-	-	-	K1	-	-
VR-8070-S	***9***	-	-	-	-	-	K2	-	-
KRF-X9080D	***8***	-	Y1	-	-	-	-	-	-
KRF-X9080D-S	***8***	-	-	-	-	-	-	-	-
VR-8060	***7***	-	-	-	-	-	K3	-	-

KRF-X9080D/VR-8070/8060

SPECIFICATIONS

KRF-X9080D/X9080D-S(For Europe)

AUDIO section

Rated power output during STEREO operation
- DIN/IEC (20 Hz ~ 20kHz, 0.09 % T.H.D. at 6 Ω) ..... 100 W + 100 W
- (1 kHz, 10 % T.H.D. at 6 Ω) ..... 150 W + 150 W

Effective power output during SURROUND operation
- FRONT
- (20 Hz ~ 20 kHz, 0.09 % T.H.D. at 6 Ω one channel driven) ..... 100 W + 100 W
- (1 kHz, 10 % T.H.D. at 6 Ω one channel driven) ..... 150 W + 150 W
- CENTER
- (20 Hz ~ 20 kHz, 0.09 % T.H.D. at 6 Ω one channel driven) ..... 100 W
- (1 kHz, 10 % T.H.D. at 6 Ω one channel driven) ..... 150 W
- SURROUND
- (20 Hz ~ 20 kHz, 0.7 % T.H.D. at 6 Ω one channel driven) ..... 100 W + 100 W
- (1 kHz, 10 % T.H.D. at 6 Ω one channel driven) ..... 150 W + 150 W
- SURROUND BACK
- (20 Hz ~ 20 kHz, 0.7 % T.H.D. at 6 Ω one channel driven) ..... 100 W + 100 W
- (1 kHz, 10 % T.H.D. at 6 Ω one channel driven) ..... 150 W + 150 W

Total harmonic distortion ..... 0.009 % (1 kHz, 50 W, 6 Ω)
Frequency response
- Line (CD/DVD, TAPE, VIDEO 1, VIDEO 2, VIDEO 3, DVD/6CH) ..... 10 Hz ~ 100 kHz, 0 dB ~ –3.0 dB

PHONO 'RIAA' response ..... 40 Hz ~ 20 kHz, +1.5 dB ~ –3.0 dB
Maximum input level
- PHONO (MM) ..... 40 mV, 1 % T.H.D. at 1 kHz

Signal to noise ratio (IHF'66)
- PHONO (MM) ..... 75 dB
- Line (CD/DVD, TAPE, VIDEO 1, VIDEO 2, VIDEO 3, DVD/6CH) ..... 95 dB

Loudness control
- VOLUME at –30 dB level ..... +6 dB (100 Hz)

Input sensitivity / impedance
- PHONO (MM) ..... 4 mV / 47 kΩ
- Line (CD/DVD, TAPE, VIDEO 1, VIDEO 2, VIDEO 3, DVD/6CH) ..... 300 mV / 47 kΩ

Output level / impedance
- TAPE REC ..... 300 mV / 1 kΩ
- PRE OUT (FRONT CHANNEL) ..... 1 V / 500 Ω
- PRE OUT (CENTER CHANNEL) ..... 1 V / 500 Ω
- PRE OUT (SURROUND CHANNEL) ..... 1 V / 500 Ω
- PRE OUT (SURROUND BACK CHANNEL) ..... 1 V / 500 Ω
- PRE OUT (SUBWOOFER) ..... 1 V / 500 Ω

Tone control
- BASS ..... ±10 dB (at 100 Hz)
- TREBLE ..... ±10 dB (at 10 kHz)

DIGITAL AUDIO section

Sampling frequency ..... 32 kHz, 44.1 kHz, 48 kHz, 96 kHz
Input level / impedance / wave length
- Optical ..... –15 dBm ~ –24 dBm, 660 nm ±30 nm

Coaxial ..... 0.5 Vp-p / 75 Ω
Output level / impedance / wave length
- Optical ..... –21 dBm ~ –15 dBm, 660 nm ±30 nm

VIDEO section

VIDEO inputs / outputs
- VIDEO (composite) ..... 1 Vp-p / 75 Ω

S VIDEO inputs /outputs
- S VIDEO (luminance signal) ..... 1 Vp-p / 75 Ω
- S VIDEO (chrominance signal) ..... 0.286 Vp-p / 75 Ω

COMPONENT VIDEO inputs/ outputs
- COMPONENT VIDEO (luminance signal) ..... 1 Vp-p / 75 Ω
- COMPONENT VIDEO (CB/CR-signal) ..... 0.7 Vp-p / 75 Ω

FM tuner section

Tuning frequency range ..... 87.5 MHz ~ 108.0 MHz
Usable sensitivity
MONO ..... 1.3 μV (75 Ω)/ 13.2 dBf (40 kHz dev, S/N 26 dB)
STEREO ..... 45 μV (75 Ω)/ 42.1 dBf (40 + 6 kHz dev, S/N 46 dB)
Total harmonic distortion (DIN at 1 kHz)
- MONO (1 kHz, 40 kHz dev) ..... 0.2% (65.2 dBf input)
- STEREO (1 kHz, 40 + 6 kHz dev) ..... 0.8% (65.2 dBf input)

Signal to noise ratio (DIN weighted at 1 kHz)
- MONO ..... 65 dB (65.2 dBf input)
- STEREO ..... 60 dB (65.2 dBf input)

Stereo separation (1 kHz) ..... 36 dB
Selectivity (DIN ±300 kHz) ..... 64 dB
Frequency response (30 Hz ~ 15 kHz) ..... +0.5 dB, –3.0 dB

AM tuner section

Tuning frequency range ..... 531 kHz ~ 1,602 kHz
Usable sensitivity (30% mod, S/N 20 dB) ..... 16 μV / (600 μV/m)
Signal to noise ratio (30% mod, 400 Hz) ..... 50 dB (60 dBμV EMF input)

GENERAL

Power consumption ..... 330 W
Standby Power consumption ..... less than 1.5W
AC outlet
- SWITCHED ..... (total 90 W max.)

Dimensions ..... W : 440 mm (17-5/16")
H : 159 mm (6-1/4")
D : 392 mm (15-7/16")

Weight (Net) ..... 12.0 kg (26.5 lb)

Notes
1. KENWOOD follows a policy of continuous advancements in development. For this reason specifications may be changed without notice.
2. The full performance may not be exhibited in an extremely cold location (under a water-freezing temperature).

KRF-X9080D/VR-8070/8060

SPECIFICATIONS

KRF-X9080D/X9080D-S(For other countries)

AUDIO section

Rated power output during STEREO operation
- DIN/IEC (20 Hz ~ 20kHz, 0.09 % T.H.D. at 8 Ω) ..... 100 W + 100 W
- (1 kHz, 10 % T.H.D. at 8 Ω) ..... 130 W + 130 W

Effective power output during SURROUND operation
- FRONT
  (20 Hz ~ 20 kHz, 0.09 % T.H.D. at 8 Ω one channel driven) ..... 100 W + 100 W
  (1 kHz, 10 % T.H.D. at 8 Ω one channel driven) ..... 130 W + 130 W
- CENTER
  (20 Hz ~ 20 kHz, 0.09 % T.H.D. at 8 Ω one channel driven) ..... 100 W
  (1 kHz, 10 % T.H.D. at 8 Ω one channel driven) ..... 130 W
- SURROUND
  (20 Hz ~ 20 kHz, 0.7 % T.H.D. at 8 Ω one channel driven) ..... 100 W + 100 W
  (1 kHz, 10 % T.H.D. at 8 Ω one channel driven) ..... 130 W + 130 W
- SURROUND BACK
  (20 Hz ~ 20 kHz, 0.7 % T.H.D. at 8 Ω one channel driven) ..... 100W + 100 W
  (1 kHz, 10 % T.H.D. at 8 Ω one channel driven) ..... 130 W + 130 W

Total harmonic distortion ..... 0.009 % (1 kHz, 50 W, 8 Ω)
Frequency response
- (CD/DVD, TAPE, VIDEO 1, VIDEO 2, VIDEO 3, DVD/6CH) ..... 10 Hz ~ 100 kHz, 0 dB ~ –3.0 dB

PHONO 'RIAA' response ..... 40 Hz ~ 20 kHz, +1.5 dB ~ –3.0 dB
Maximum input level
- PHONO (MM) ..... 40 mV, 1 % T.H.D. at 1 kHz

Signal to noise ratio (IHF'66)
- PHONO (MM) ..... 75 dB
- Line (CD/DVD, TAPE, VIDEO 1, VIDEO 2, VIDEO 3, DVD/6CH) ..... 95 dB

Loudness control
- VOLUME at –30 dB level ..... +6 dB (100 Hz)

Input sensitivity / impedance
- PHONO (MM) ..... 4 mV / 47 kΩ
- (CD/DVD, TAPE, VIDEO 1, VIDEO 2, VIDEO 3, DVD/6CH) ..... 300 mV / 47 kΩ

Output level / impedance
- TAPE REC ..... 300 mV / 1 kΩ
- PRE OUT (FRONT CHANNEL) ..... 1 V / 500 Ω
- PRE OUT (CENTER CHANNEL) ..... 1 V / 500 Ω
- PRE OUT (SURROUND CHANNEL) ..... 1 V / 500 Ω
- PRE OUT (SURROUND BACK CHANNEL) ..... 1 V / 500 Ω
- PRE OUT (SUBWOOFER) ..... 1 V / 500 Ω

Tone control
- BASS ..... ±10 dB (at 100 Hz)
- TREBLE ..... ±10 dB (at 10 kHz)

DIGITAL AUDIO section

Sampling frequency ..... 32 kHz, 44.1 kHz, 48 kHz, 96 kHz
Input level / impedance / wave length
- Optical ..... –15 dBm ~ –24 dBm, 660 nm ±30 nm

Coaxial ..... 0.5 Vp-p / 75 Ω
Output level / impedance / wave length
- Optical ..... –21 dBm ~ –15 dBm, 660 nm ±30 nm

VIDEO section

VIDEO inputs / outputs
- VIDEO (composite) ..... 1 Vp-p / 75 Ω

S VIDEO inputs /outputs
- S VIDEO (luminance signal) ..... 1 Vp-p / 75 Ω
- S VIDEO (chrominance signal) ..... 0.286 Vp-p / 75 Ω

COMPONENT VIDEO inputs/ outputs
- COMPONENT VIDEO (luminance signal) ..... 1 Vp-p / 75 Ω
- COMPONENT VIDEO (CB/CR-signal) ..... 0.7 Vp-p / 75 Ω

FM tuner section

Tuning frequency range ..... 87.5 MHz ~ 108.0 MHz
Usable sensitivity
MONO ..... 1.6 µV (75 Ω)/ 15.2 dBf (75 kHz dev, SINAD 30 dB)
50dB quieting sensitivity
STEREO ..... 28 µV (75 Ω)/ 40.2 dBf (75 kHz dev)
Total harmonic distortion
- MONO (1 kHz, 75 kHz dev) ..... 0.5% (65 dBf input)
- STEREO (1 kHz, 67.5 + 67.5 kHz dev) ..... 0.7% (65 dBf input)

Signal to noise ratio
- MONO (1 kHz, 75 kHz dev) ..... 75 dB (65 dBf input)
- STEREO (1 kHz, 67.5 + 67.5 kHz dev) ..... 68 dB (65 dBf input)

Stereo separation (1 kHz) ..... 40 dB
Selectivity (±400 kHz) ..... 50 dB
Frequency response (30 Hz ~ 15 kHz) ..... +0.5 dB, –3.0 dB

AM tuner section

Tuning frequency range (9 kHz step) ..... 531 kHz ~ 1,602 kHz
(10 kHz step) ..... 530 kHz ~ 1,610 kHz
Usable sensitivity (30% mod, S/N 20 dB) ..... 16 µV / (600 µV/m)
Signal to noise ratio (30% mod, 400 Hz) .....
..... 50 dB (60 dBµV EMF input)

GENERAL

Power consumption ..... 300 W
Standby Power consumption ..... less than 1.5W
AC outlet
- SWITCHED ..... (total 90 W max.)

Dimensions ..... W : 440 mm(17-5/16")
H : 159 mm (6-1/4")
D : 392 mm (15-7/16")

Weight (Net) ..... 12.1 kg (26.7 lb)

KRF-X9080D/VR-8070/8060

SPECIFICATIONS

VR-8070/8070-S,VR-8060-S

AUDIO section

Rated power output during STEREO operation

100 watts per channel minimum RMS, both channels driven, at 8 Ω from 20 Hz to 20 kHz with no more than 0.09% total harmonic distortion. (FTC)

Effective power output during SURROUND operation

VR-8070/8070-S
FRONT (20 ~ 20 kHz, 0.09 % T.H.D. at 8 Ω one channel driven) ..... 100 W + 100 W
CENTER (20 ~ 20 kHz, 0.09 % T.H.D. at 8 Ω one channel driven) ..... 100 W
SURROUND (20 ~ 20 kHz, 0.7 % T.H.D. at 8 Ω one channel driven) ..... 100 W + 100 W
SURROUND BACK (20 ~ 20 kHz, 0.7 % T.H.D. at 8 Ω one channel driven) ..... 100 W + 100 W
VR-8060-S
FRONT (20 ~ 20 kHz, 0.09 % T.H.D. at 8 Ω one channel driven) ..... 100 W + 100 W
CENTER (20 ~ 20 kHz, 0.09 % T.H.D. at 8 Ω one channel driven) 100 W
SURROUND (20 ~ 20 kHz, 0.7 % T.H.D. at 8 Ω one channel driven) ..... 100 W + 100 W
SURROUND BACK/SUBWOOFER (20 ~ 20 kHz, 0.09 % T.H.D. at 8 Ω one channel driven) ..... 100 W

Total harmonic distortion ..... 0.009 % (1 kHz, 50 W, 8 Ω)

Frequency response
Line (CD/DVD, TAPE, VIDEO 1, VIDEO 2, VIDEO 3, DVD/6CH) ..... 10 Hz ~ 100 kHz, 0 dB ~ –3.0 dB

PHONO 'RIAA' response ..... 40 Hz ~ 20 kHz, +1.5 dB ~ –3.0 dB

Maximum input level
PHONO (MM) ..... 40 mV, 1 % T.H.D. at 1 kHz

Signal to noise ratio (IHF'66)
PHONO (MM) ..... 75 dB
Line (CD/DVD, TAPE, VIDEO 1, VIDEO 2, VIDEO 3, DVD/6CH) ..... 95 dB

Loudness control
VOLUME at –30 dB level ..... +6 dB (100 Hz)

Input sensitivity / impedance
VR-8070/8070-S
PHONO (MM) ..... 4 mV / 47 kΩ
Line (CD/DVD, TAPE, VIDEO 1, VIDEO 2, VIDEO 3, DVD/6CH) ..... 300 mV / 47 kΩ
VR-8060-S
PHONO (MM) ..... 6 mV / 47 kΩ
Line (CD/DVD, TAPE, VIDEO 1, VIDEO 2, VIDEO 3, DVD/6CH) ..... 500 mV / 47 kΩ

Output level / impedance
VR-8070/8070-S
TAPE REC ..... 300 mV / 1 kΩ
PRE OUT (FRONT CHANNEL) ..... 1 V / 500 Ω
PRE OUT (CENTER CHANNEL) ..... 1 V / 500 Ω
PRE OUT (SURROUND CHANNEL) ..... 1 V / 500 Ω
PRE OUT (SURROUND BACK CHANNEL) ..... 1 V / 500 Ω
PRE OUT (SUBWOOFER) ..... 1 V / 500 Ω
VR-8060-S
TAPE REC ..... 500 mV / 1 kΩ
PRE OUT (SURROUND BACK CHANNEL) ..... 1 V / 1 kΩ
PRE OUT (SUBWOOFER) ..... 1 V / 1 kΩ

Tone control
Optical ..... –15 dBm ~ –24 dBm, 660 nm ±30 nm
Coaxial ..... 0.5 Vp-p / 75 Ω

Output level / impedance / wave length
Optical ..... –21 dBm ~ –15 dBm, 660 nm ±30 nm

VIDEO section

VIDEO inputs / outputs
VIDEO (composite) ..... 1 Vp-p / 75 Ω

S VIDEO inputs /outputs
S VIDEO (luminance signal) ..... 1 Vp-p / 75 Ω
S VIDEO (chrominance signal) ..... 0.286 Vp-p / 75 Ω

COMPONENT VIDEO inputs /outputs
COMPONENT VIDEO (luminance signal) ..... 1 Vp-p / 75 Ω
COMPONENT VIDEO (CB/CR-signal) ..... 0.7 Vp-p / 75 Ω

FM tuner section

Tuning frequency range ..... 87.5 MHz ~ 108.0 MHz

Usable sensitivity (MONO)
..... 1.3 μV (75 Ω)/ 13.2 dBf (75 kHz dev, SINAD 30 dB)

50 dB quieting sensitivity
STEREO ..... 28 μV (75 Ω)/ 40.2 dBf (75 kHz dev)

Total harmonic distortion
MONO (1 kHz, 75 kHz dev) ..... 0.5% (65 dBf input)
STEREO (1 kHz, 67.5 + 67.5 kHz dev) ..... 0.7% (65 dBf input)

Signal to noise ratio
MONO (1 kHz, 75 kHz dev) ..... 75 dB (65 dBf input)
STEREO (1 kHz, 67.5 + 67.5 kHz dev) ..... 68 dB (65 dBf input)

Stereo separation (1 kHz) ..... 40 dB

Selectivity (±400 kHz) ..... 70 dB

Frequency response (30 Hz ~ 15 kHz) ..... +0.5 dB, –3.0 dB

AM tuner section

Tuning frequency range
10 kHz step ..... 530 kHz ~ 1,700 kHz

Usable sensitivity (30% mod, S/N 20 dB) .....
..... 16 μV / (600 μV/m)

Signal to noise ratio (30% mod, 400 Hz)
..... 50 dB (60 dBμV EMF input)

GENERAL

Power consumption ..... 3.4 A

Standby Power consumption ..... less than 1 W

AC outlet
SWITCHED ..... (total 150 W, 1.25 A max.)

Dimensions ..... W : 440 mm (17-5/16")
H : 159 mm (6-1/4")
D : 392 mm (15-7/16")

Weight (Net)
VR-8070/8070-S ..... 11.7 kg (25.8 lb)
VR-8060-S ..... 11 kg (24.3 lb)