RIVER
Creative TECHNOLOGY

JX-3P MIDI Expansion Kit

Installation manual



Language: English

Manual Version: 3.01
Date: January 5, 2018

Website: http://www.riversynths.com
Email: info@riversynths.com

Please note:
* Roland is a registered trademark of Roland Corp. US
* River Creative Technology is not associated to Roland Corp. US

Introduction

Thank you for choosing the River JX-3P MIDI Expansion Kit. This manual explains how to install the kit in your JX-3P. Installation can also be done for you upon request (contact: info@riversynths.com), as a paid service. Instructions on how to use an already installed kit can be found in the separately available user manual (see http://www.riversynths.com).

Features

When installed, the JX-3P MIDI expansion kit adds the following new features to your JX-3P:

- Real-time control over all JX-3P parameters with standard MIDI CC messages (from a sequencer or MIDI controller)
- Loading new patches into the JX-3P via MIDI (CC)
- Selectable MIDI receive channel (1-3)
- Velocity sensitivity (via MIDI-input, not the keyboard)

Additional features for owners of a PG-200 (or DT-200) programmer:

- Simultaneous control over the JX-3P via MIDI input and programmer
- Transmission of MIDI CC messages from programmer, for recording in sequencer, or controlling other MIDI devices

Please note

- This kit only works with the JX-3P (not the MKS-30)
- This kit does not change the sound of your JX-3P, it only adds new ways of controlling it
- This kit requires entry-level soldering skills and careful following of instructions
- This kit does not require additional parts, but tools are needed for montage
- Placing this kit requires you to cut 2 PCB traces on the JX-3P's MIDI board, but is otherwise non-destructive. Undoing the installation and bringing back a JX-3P to its original state requires these traces to be reconstructed (e.g. with wire links).
- Patches in the user memory will be retained after installation*

*Provided you follow the instructions precisely and do not short out the backup battery or RAM IC during installation.

Precautions

Please read this manual carefully before installing the kit!



Caution

Through this manual, I attempt to provide you with the information to safely and successfully install the JX-3P MIDI expansion kit in your JX-3P synthesizer, but assume that you have sufficient skills in handling potentially lethal voltages and the required construction tools safely. Therefore, River Creative Technology cannot be held responsible for (and not limited to) any harm to you/others, or to your/their equipment (including electric shocks, fire, damage, malfunctions and accidents involving soldering or mechanical assembly). I hope you understand.

Specific warnings:

- Installation of this kit requires opening the JX-3P synthesizer case
- Entry-level soldering skills and equipment are required
- There are dangerously high voltages inside the JX-3P, please follow the general safety precautions. Unplug the JX-3P from wall socket voltage before opening it, and do not power it while open. Avoid directly or indirectly touching the area of the power-supply inside the JX-3P (right hand bottom side).
- Take appropriate measures against static electricity (e.g. ESD wrist band). Static electricity could damage both the JX-3P MIDI expansion kit and your JX-3P!
- If you feel you don't have the required knowledge and skills, please refer to a competent person to do the installation for you (e.g. River Creative Technology offers this as a paid service).

River Creative Technology cannot be held responsible for, but not limited to, any personal injury, injury to other people, damage, or loss of data, caused during installation or the use of the JX-3P MIDI Expansion kit!

Installing and using the JX-3P MIDI expansion kit means that you accept and understand these terms.

Chapter 1. Opening the bag

The package contains:

- A prebuilt merger box (a black plastic case, with 10-pin header)
- A pre-programmed firmware ROM for replacing the JX-3P's original ROM
- A 10-pole cable (rainbow colored) with connector
- A wire link (approx. 10cm)
- Two complementary adhesive velcro pads (for mounting)



Chapter 2. Installation in the JX-3P

The following items are needed for installation:

- The firmware ROM.
- The merger box.
- The 10-pole cable (rainbow colored) with connector.

Also needed (not included with the kit):

- A soldering iron.
- Other general tools such as screwdrivers, scissors or wire stripper, and pliers.
- Sharp object such as a knife, for disconnecting two PCB traces on the DIN board.
- An Ohmmeter, to inspect the disconnected PCB traces for unseen and unwanted shorts.

Installation steps:

Step 1 (preparation...).



Disconnect the power plug from the wall socket!

Step 2.

Place the JX-3P on a soft surface to prevent scratches on the front panel when turning it over.

Step 3.

Turn the JX-3P upside down and remove all the screws indicated in the picture below.

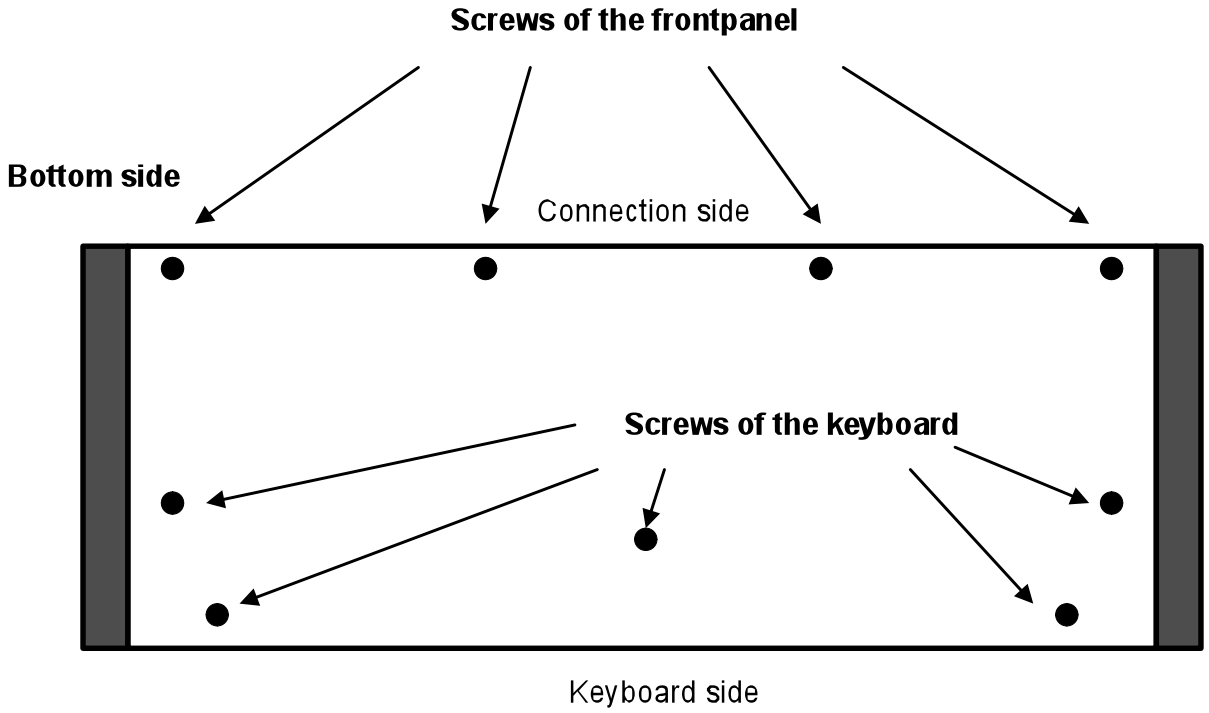

Step 4.

Turn the JX-3P back upside. Be careful while doing this, the keyboard can now move freely and could fall out! Remove the screws on the sides (4 in total). After this the front panel can be opened.

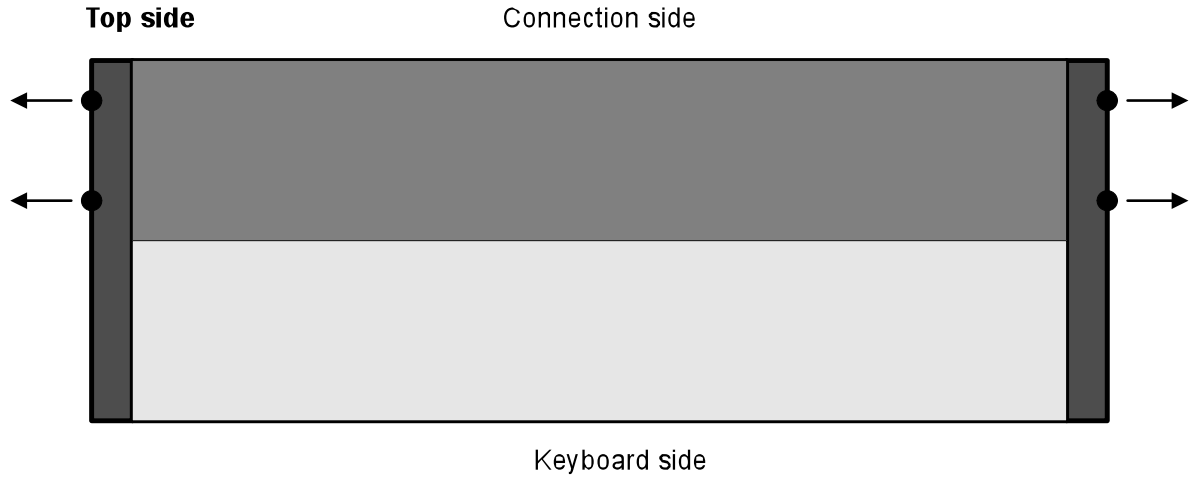

Step 5.

Lift and rotate the front panel backwards (there are no hinges). Make sure to avoid strain/damage on the internal cables while moving it.

.

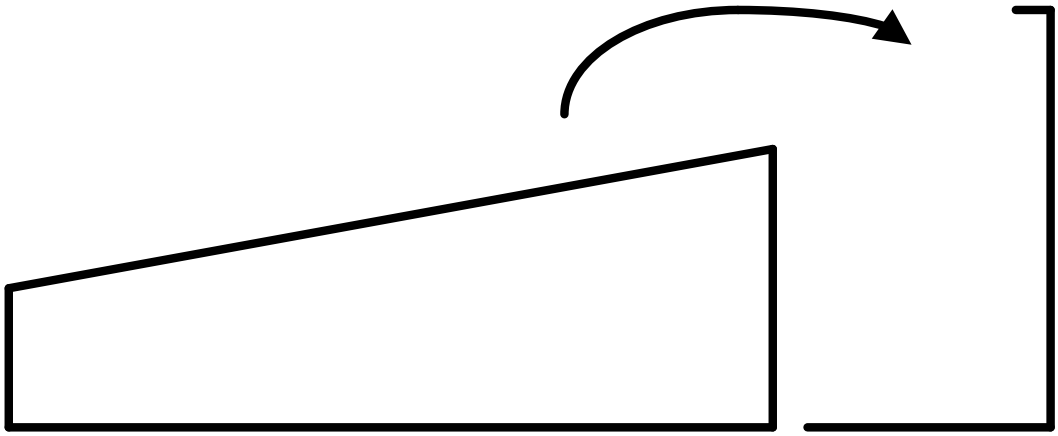

Partially remove the keyboard outside the case. You do not have to unplug the cables connected to it, as you only need to move it just enough to reach the firmware ROM on the main board. Avoid touching the power supply (capacitors can still be charged after power is disconnected).

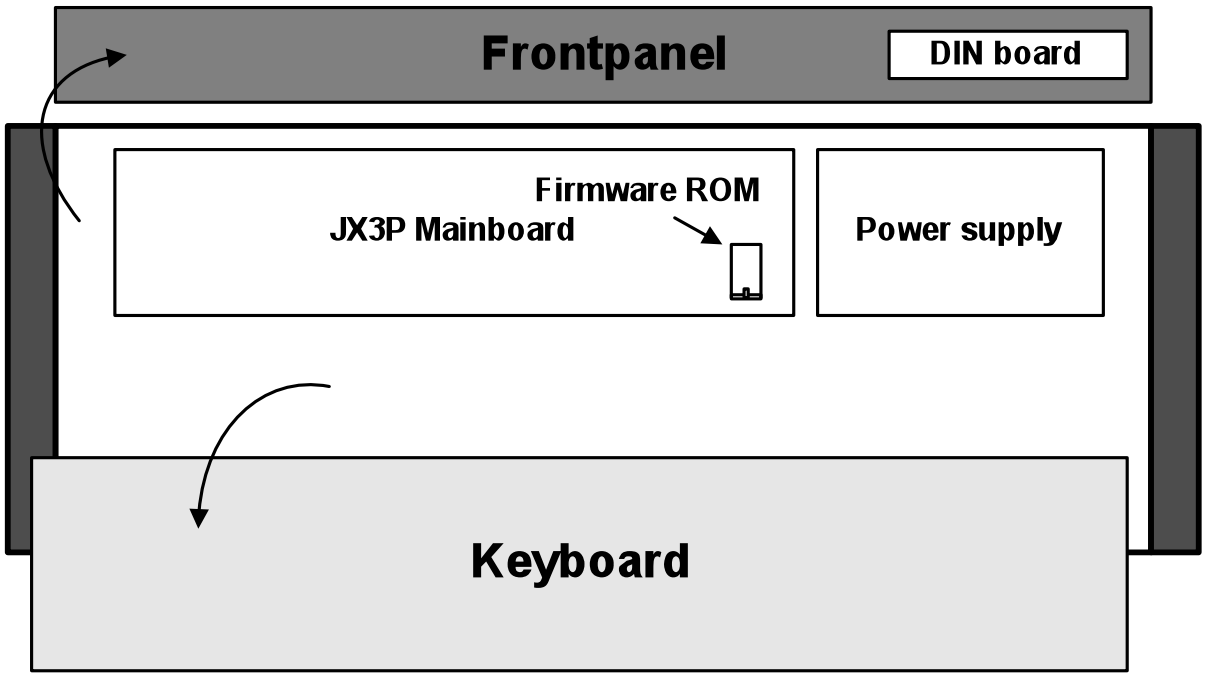

Step 6 (installing the new firmware ROM...)

You can find the firmware ROM at the lower left side of the main board (IC-52). The original IC will be labeled 2764 or 2365 (sometimes covered with a sticker).

If the firmware ROM is soldered directly onto the main board, you need to remove the main board, and desolder the IC. Then solder an IC socket into this location, and place the main board back into the JX-3P. These actions are not further described in this document.

Carefully remove the old firmware ROM from the socket. This is done best with a dedicated IC extractor tool, but with a little care can patience can also be achieved with a small screwdriver and/or pliers.

The new firmware ROM (in this kit) has a larger capacity and requires one extra address line than is available in the original JX-3P. This line must be constructed manually between the JX-3Ps CPU (IC44, labeled 8031 or 8051) and the firmware ROM (IC52, labeled 2764 or 2765) using the provided wire link, such that it interconnects pin 26 on the CPU with pin 26 on the firmware ROM. If you are uncertain about pin numbering conventions, please look up this information first.

The best way to achieve a good soldering point on the ICs is to lift up pin 26 on each of them and bend it such that it is sticking over the edge of the IC socket, instead of going into it. Make sure these bent pins are not making contact again with the IC socket, or with other conductive parts in the vicinity. Put the IC back into the socket.

Strip the ends of the provided wire link and solder it between both prepared pins (pin 26 on both ICs), such that you have made the required interconnection. Try to achieve a good connection without applying heat for too long to the IC pin, as this could permanently damage the IC. It is also recommended to keep the wire as short as possible (the one provided is sufficiently short, but you may further trim it), to avoid it picking up unwanted interference.

In case you encounter the CPU soldered directly to the main board, you can solder the wire to pin 26 with the CPU in place. Originally pin 26 is not connected to anything in the JX-3P. Just be careful you do not apply too much heat to the CPU for too long, and check you haven't made unwanted shorts to neighboring pins/parts while soldering.

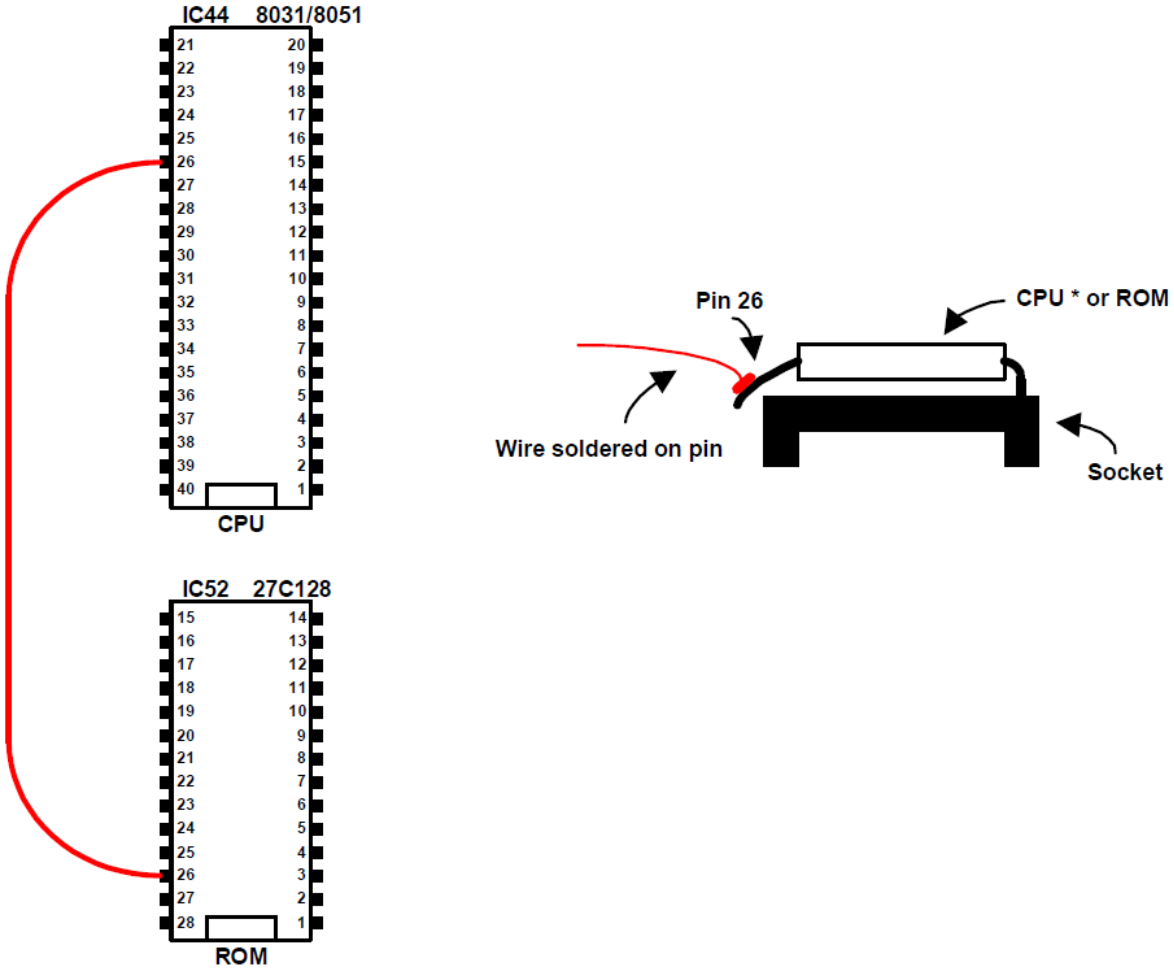

Place the new firmware ROM in the socked.

Pay attention to the orientation of pin 1. Reversed insertion of the IC into the socket could damage the IC and other components in the JX-3P

Keep the original firmware ROM in a safe place.

Step 7 (modifying the DIN board...)

The so-called DIN board it the circuit board inside the JX-3P that carries the MIDI and PG-200 sockets you see on the outside (rear right) of the instrument.

Unscrew the DIN board, and disconnect the three internal cables connected to it (CN1 JACK, CN2 POWER and C3 MAIN). Remember the location of each of these (or label them with a water-resistant marker), so you can put them back correctly after modification of the DIN board.

Step 8.

Over the years two different versions of the DIN-board have appeared in the JX-3P. These can be distinguished by the presence or absence of a MIDI-thru socket on the outside. PCB layouts for both versions can be found below, please refer to correct one for your JX-3P. The modifications to be performed are the same, but the locations will differ.

- Cut the PCB connections at point 1 and 2*. Using a screwdriver or a sharp knife, scrape sideways through the PCB trace. First, you'll see the 'solder-mask' disappear, exposing the bare copper of the trace. Keep going, until a small section of the copper has also disappeared, exposing the bare PCB material. The connection should now be broken. To verify this, place an Ohmmeter across the gap you just created (probes on conductive parts of the trace at either side), and check for no remaining conductivity.
- Remove resistor R4 at point 3. Also remove the wire link W6 at point 4. Keep these parts in a safe place, in case you'd ever like to undo this installation.
- Now solder each of the wires of the supplied 10-pole cable (rainbow colored) at the locations indicated in the PCB layout, matching the wire names (**A** through **J**) on the layout with those indicated on the merger box. The exact soldering location is not crucial, as long as you solder somewhere along the same PCB trace (if needed scrape off a bit of the solder mask to obtain a good soldering point).

* It is not crucial to adhere exactly to the indicated points for breaking the PCB trace, as long you apply the disconnection somewhere along the same trace, and in-between the functional parts connected by means of the trace.

DIN-Board without MIDI-Thru output

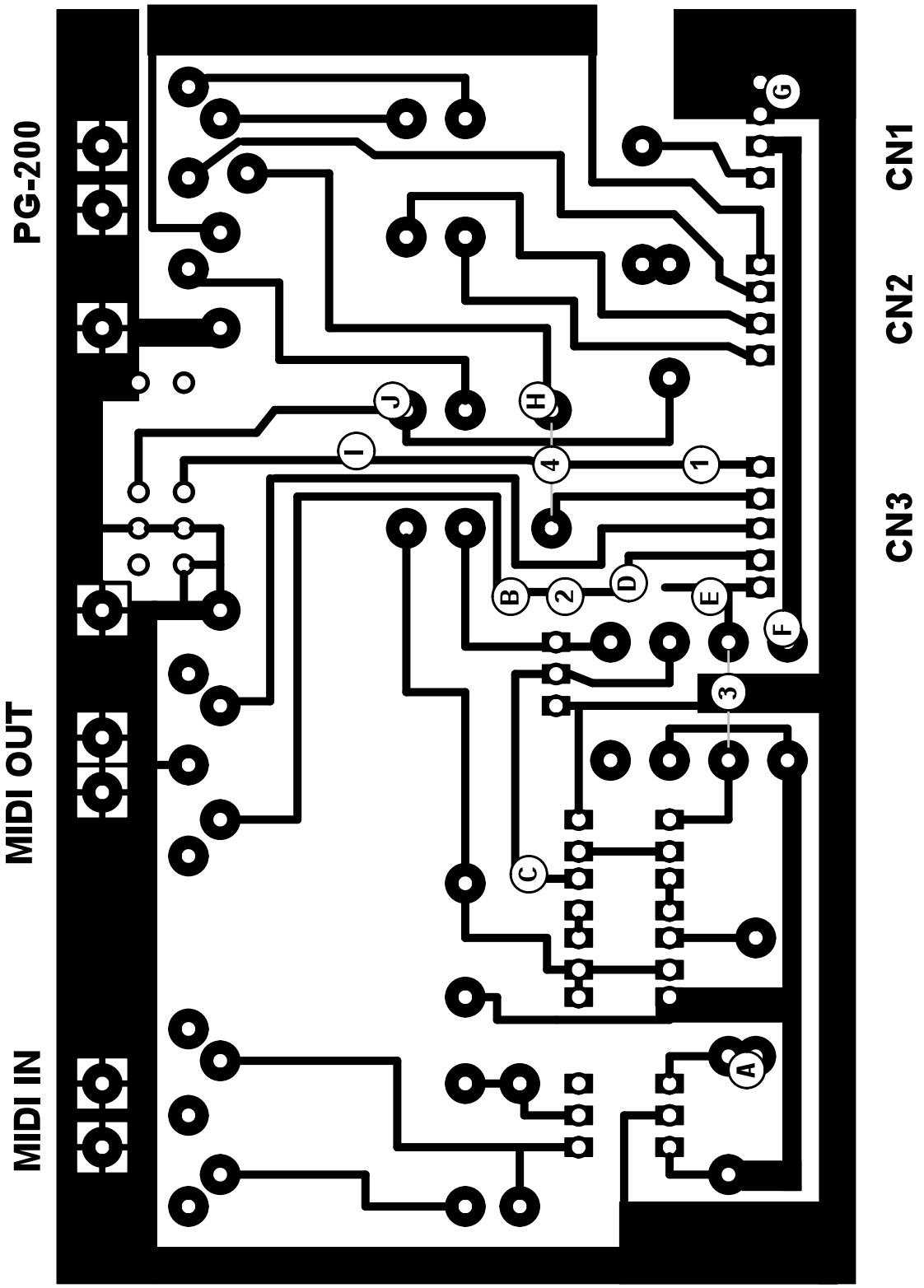

DIN-Board with MIDI-Thru output

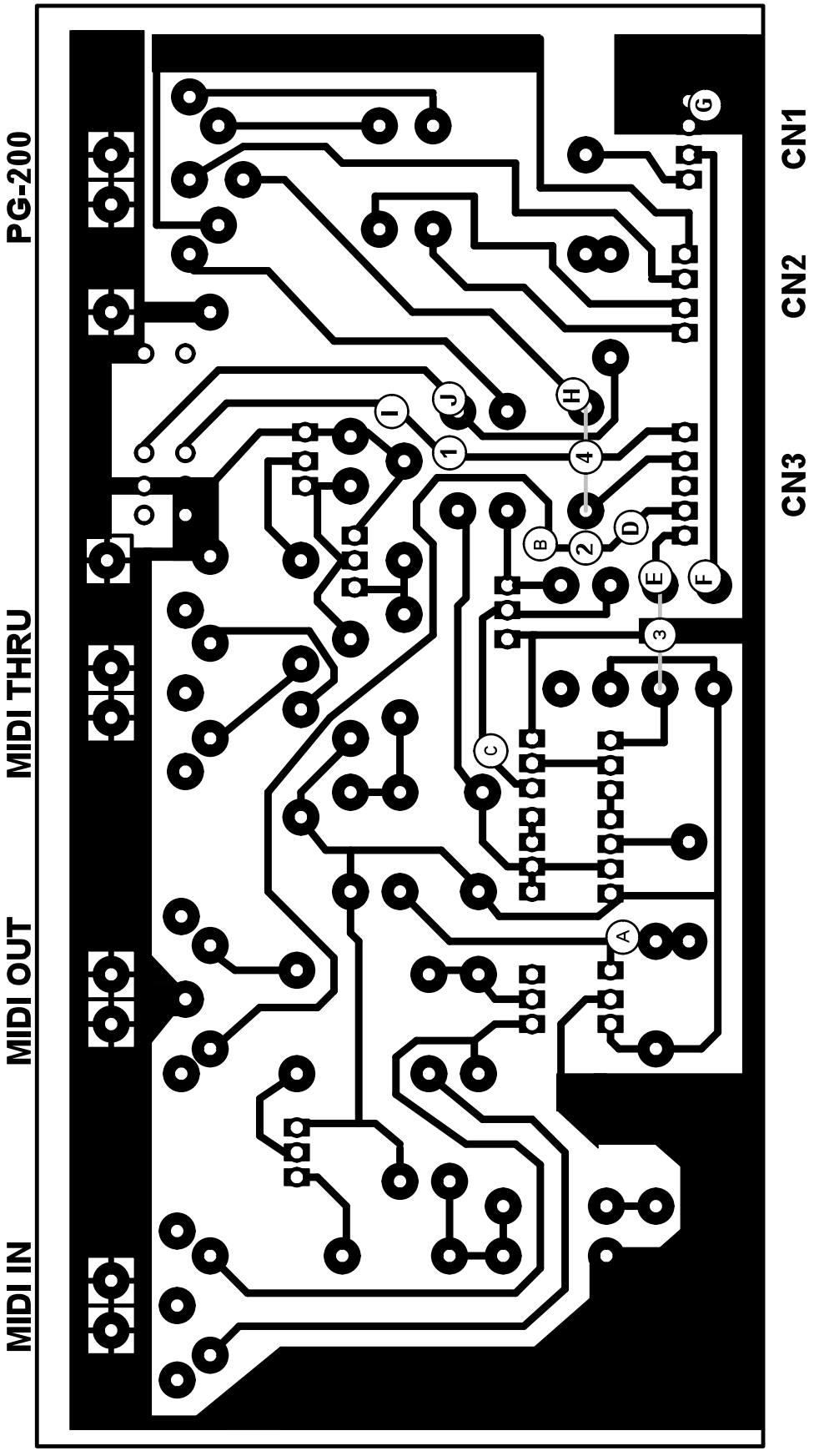

Step 9 (finishing up...)
Verify that all the connections are done correctly (rechecking now saves you a lot of potential problems later). You can tie the wires together with tape or tie wraps (do not coil them). Place the DIN-board back onto the front panel and reattach the three connectors to it.

Press the 10-pin cable connector gently onto the pin header of the merger box (fits only one way).

Use the adhesive velcro pads to mount the merger box on the inside of the front panel, next to the DIN board. Make sure no parts of it will collide with the JX-3P power supply when the case is closed.

Put the keyboard back in place (check bent pins 26 of the ICs are not touching the keyboard frame). Close the JX-3P and put back the screws you have removed.

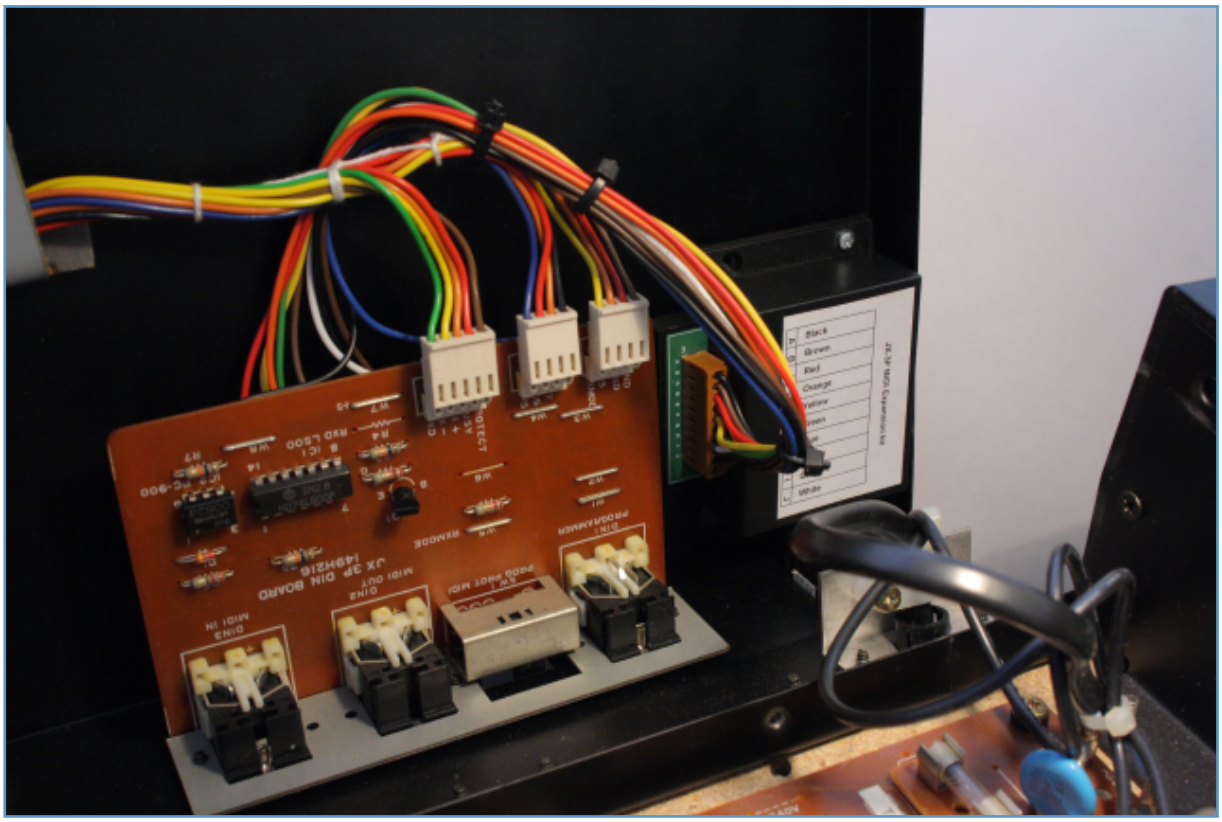

That's it! You are finished with the installation!

Chapter 3. Troubleshooting and FAQ

Q: How do I know that the JX-3P will work in my JX-3P version?

A: There are two versions of the JX-3P: The non-MIDI-Thru and the MIDI-Thru version. The JX-3P MIDI expansion kit supports both. The kit has been installed in a variety of JX-3P's in the past, in all cases without problems.

Q: Is it possible to install this kit in an MKS-30 - since it is the rack mount module of the JX-3P?

A: No, the kit can be only installed in a JX-3P. The internal hardware of the MKS-30 is not compatible with this kit.

Q: After installing the JX-3P MIDI Expansion kit, is it possible to use SysEx to control the JX-3P?

A: No, the JX-3P MIDI Expansion kit uses standard MIDI CC messages rather than SysEx. It is much easier to achieve real-time control with MIDI CCs (compared to SysEx), and many MIDI controllers and sequencers interface more reliably via CCs than via SysEx.

Q: Unfortunately I do not have the PG200 programmer. Can I therefore ignore installation of the merger box and only install the new firmware?

A: All of the features of the JX-3P MIDI Expansion kit are implemented in the merger box. It is the combination of the merger box with the new firmware ROM that makes the kit work. Just installing the ROM will not work.

Q: I have a non-working JX-3P, will this kit bring new life in it?

A: No, the kit will not 'resurrect' a non-working JX-3P. It must be installed in a working-condition JX-3P. It would be possible to combine a major revision to a non-working JX-3P with an upgrade though (River Creative Technology offers this service).

Q: Why is the LFO Delay not working when I play a note through MIDI?

A: This bug is a classic in the original JX-3P firmware, and since the JX-3P MIDI expansion kit acts as a supplement to this firmware, this original bug cannot be corrected. There is nothing I can do about it, I'm afraid. Fortunately the bug was fixed in velocity mode. But in normal mode, it is still there...

Q: I know that parameters on the PG-200 work at a resolution of 8-bit. Since MIDI usually only utilizes 7 bits, will the resolution of my PG200 be reduced after installation of the JX-3P MIDI Expansion kit?

A: No, the PG200 still sends parameters into the JX-3P with its original 8-bit resolution. Only parameters sent from the PG-200 to the MIDI-OUT, or parameters received from the MIDI-IN are in 7-bit resolution.

Q: Help! I have installed the kit and my JX-3P randomly hangs, and after that the LED's are flickering and there is no sound.

A: This problem is typically caused by an incorrect installation of the firmware ROM. Occasionally the same symptoms play up when the ROM has gone bad, but this rarely happens.

- Check if the bent pins on the ROM and CPU ICs (pin 26 on both) are touching the metal frame of the keyboard.
- It is also possible that these pins aren't bent far enough, such that they are grounded on conductive parts of the IC socket.
- It is also possible that the wire link the soldered ends of the wire link between ROM and CPU are making a secondary contact (directly, or via soldering artifacts) with neighboring pins.
- All of the above situations will cause problems and random behavior.