Jen Synthetone SX-1000 Analogue Synth mods:

I'm pretty much a complete novice to electronics (well apart from when I was 17, but can't remember that far back), so I've collated these mods from a couple of sources. So if I can do it, anyone can. I hope the below makes sense. (see web links at end for mod source originals)

Waveform & Noise Amplitude boost.

I got this from Hakan's pages, to give the output a little more equal, and especially to boost and equal get white and pink noise to roughly the same level (as on mine the white noise was really quiet comparative to the pink).

To increase the amplitude of the sawtooth, I connected a 10k resistor in parallel with the 22k resistor before the waveform selector.

For the square wave, connect a 150k resistor in parallel with the 100k resistor before the waveform selector.

Diagram (inc showing the additional 4.7uf capacitor added to waveform output as part of the filter improvement mod)

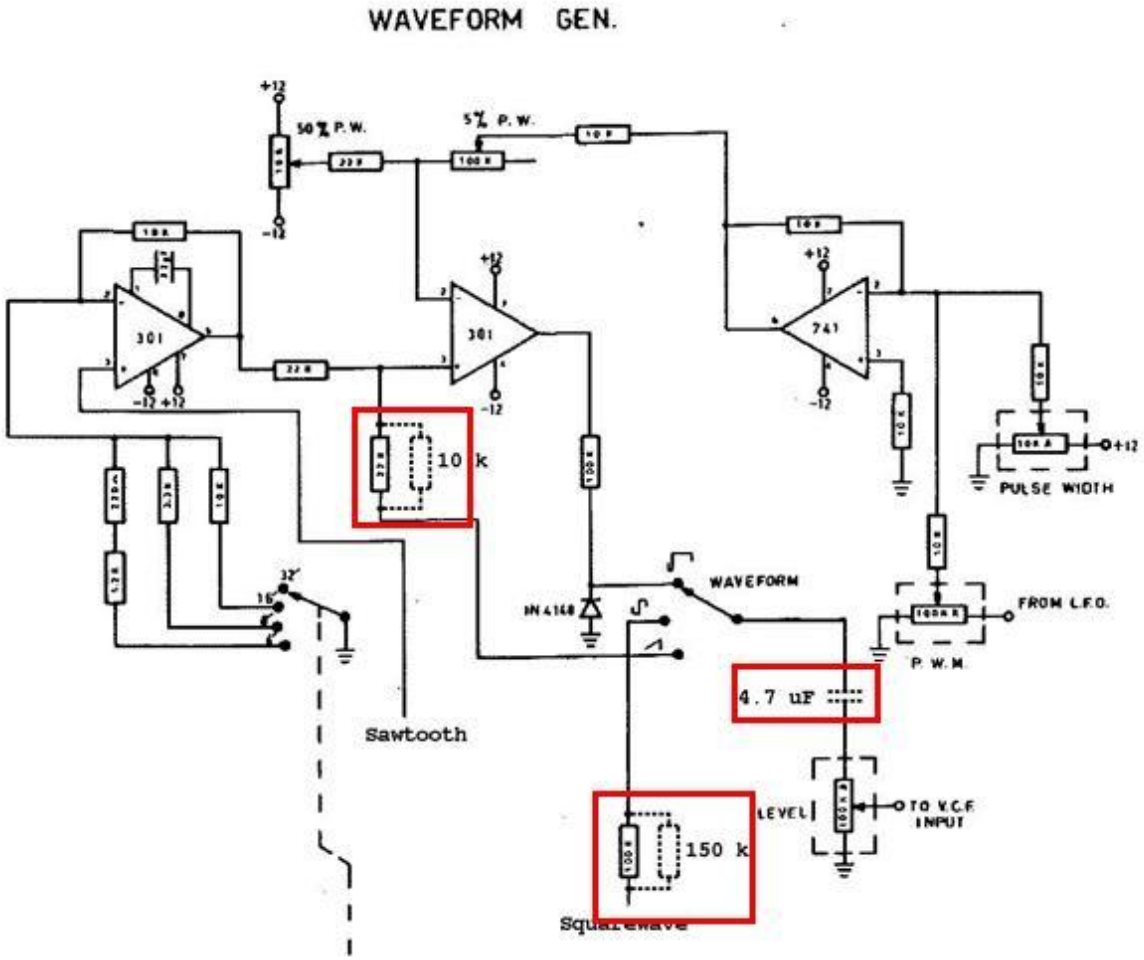

What it looks like:

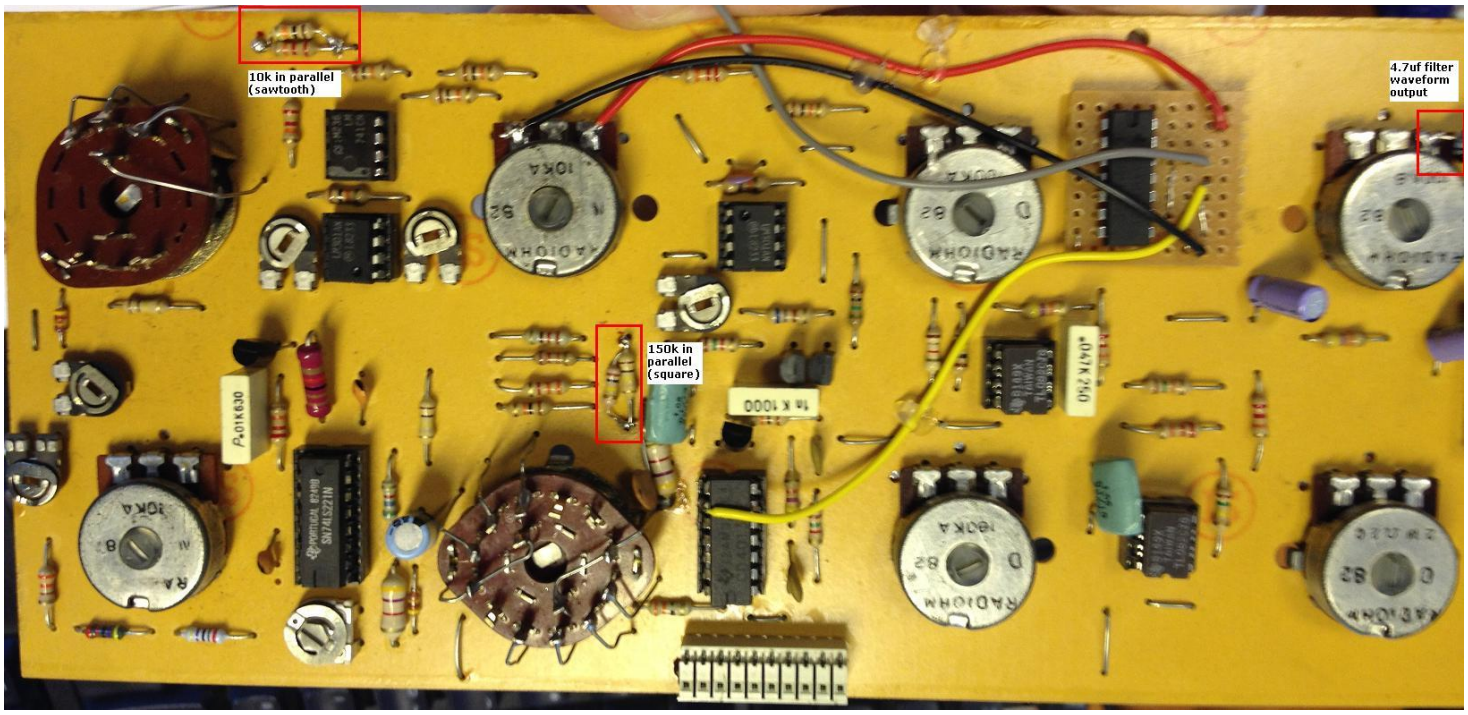

For the noise circuits, replace the 10k resistor on the output with a 33k. Then replace the white noise 470k resistor with a 200k, and the pink noise 6.8k with a 3.3k resistor. This should make the noise circuits pretty much equal to each other and raise their output levels a touch, although not quite up to the same levels as the waveform output.

Circuit Diagram

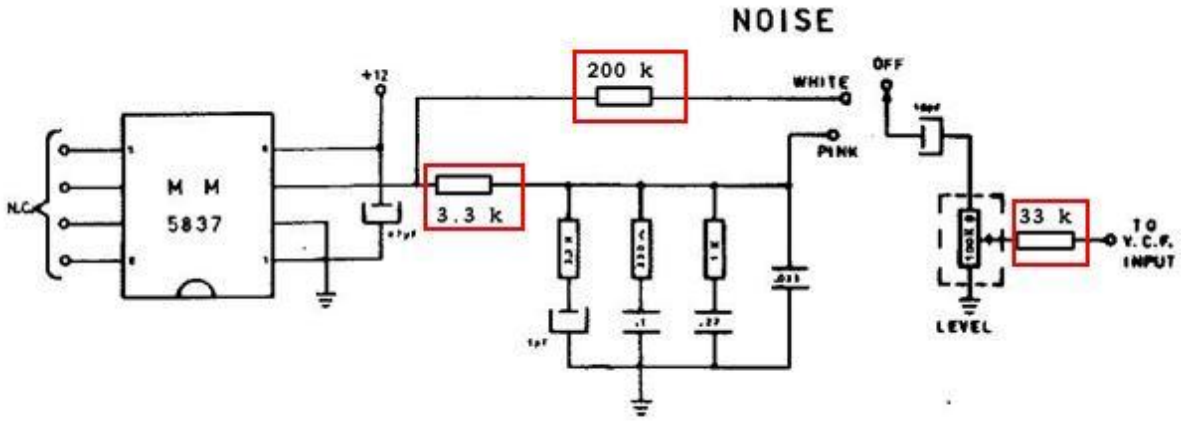

What it looks like on circuit board:

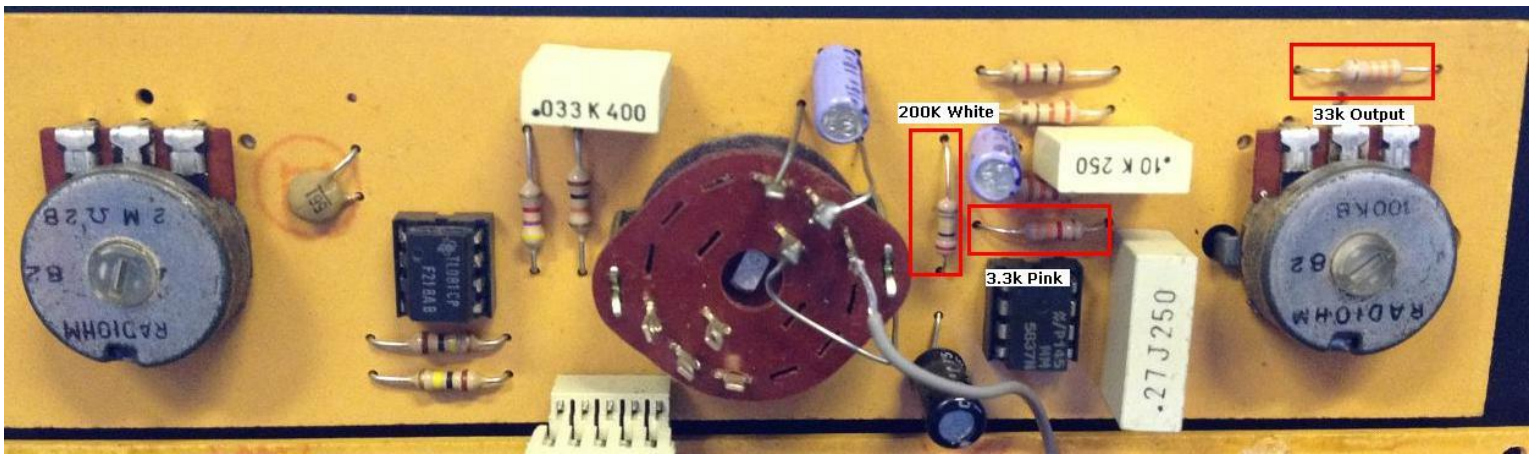

Filter modifications

The first to do I think is to change the filter integrator capacitors as per Neil Johnson's pages.

The 4 originals are disk ceramic caps marked 221, roughly all in a line across the VCF board. I swapped these out for non polarised 270pf polystyrene caps. (I looked for 220's to match but couldn't find non polarised equivalents, plus Neil used 270pf's anyway, so as he's much smarter with electronics I'm happy with these).

What it looks like:

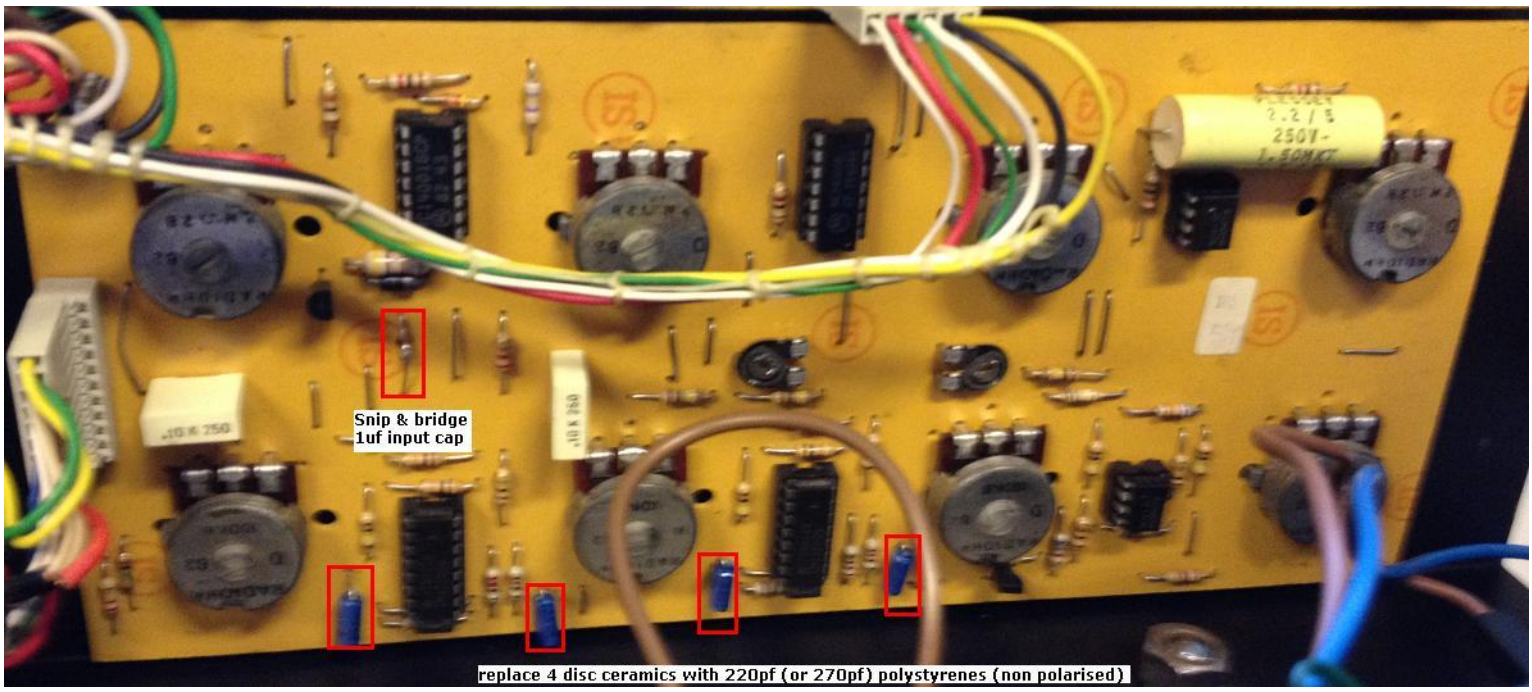

I think this has made the filter sound better overall, but I didn't record it before so I can't compare. I'd be interested, if you do this mod, to hear an A/B comparison if you fancy recording yours.

One of the very noticeable things with my Jen and I've seen noted elsewhere is that the filter section high passes terribly and bottom end disappears when turning the resonance up a fraction. To help sort this a fair bit I followed Hakan's filter mod by snipping the 1uf input cap on the VCF board and solder the remaining legs across, bridging this connection. Then as the waveform level output no longer has a cap I soldered a 4.7uf cap on the waveform output (noise circuit already has one). See the waveform boost circuit diagram for where to place it. As a note I cut a track between the end of the pot and the joined solder point next to it. This is where I bridged it with the 4.7uf cap

This improved the filter a fair bit and is really quite fat sounding with resonance fairly low, although it still starts to high pass further up the scale (starts around 3-4ish on the res scale rather that almost immediately on mine before) . Hakan mentions in his posts that you could try a higher rated cap here if you wish.

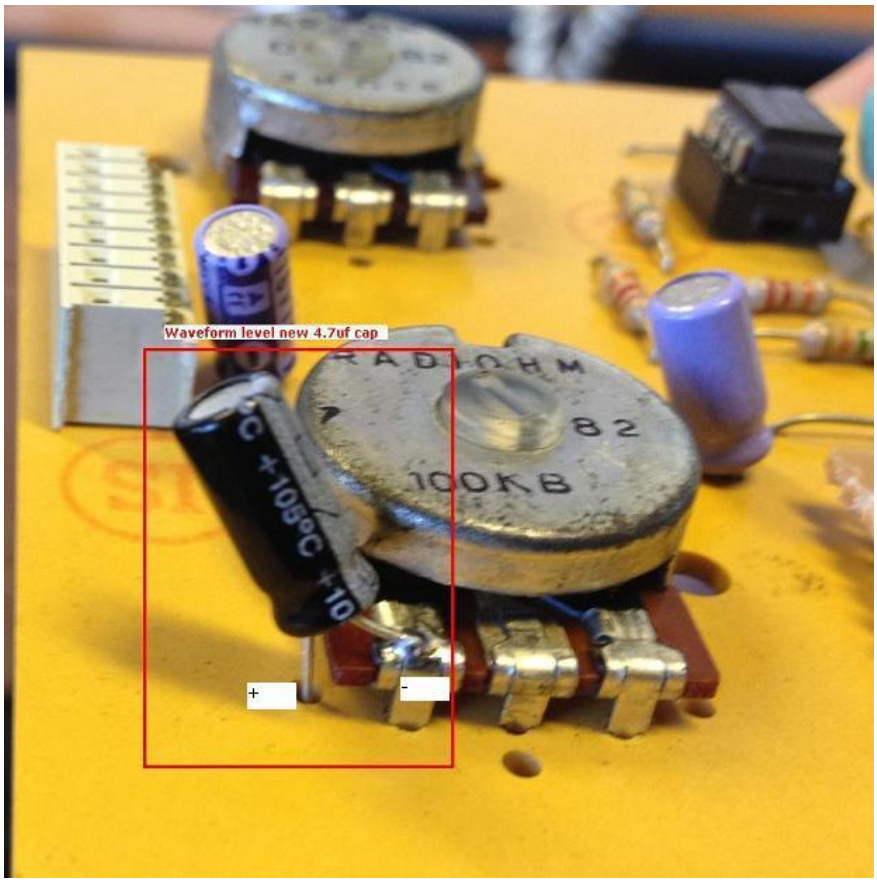
Waveform level new 4.7uf cap
RADIOHM
82
100KB
+
-

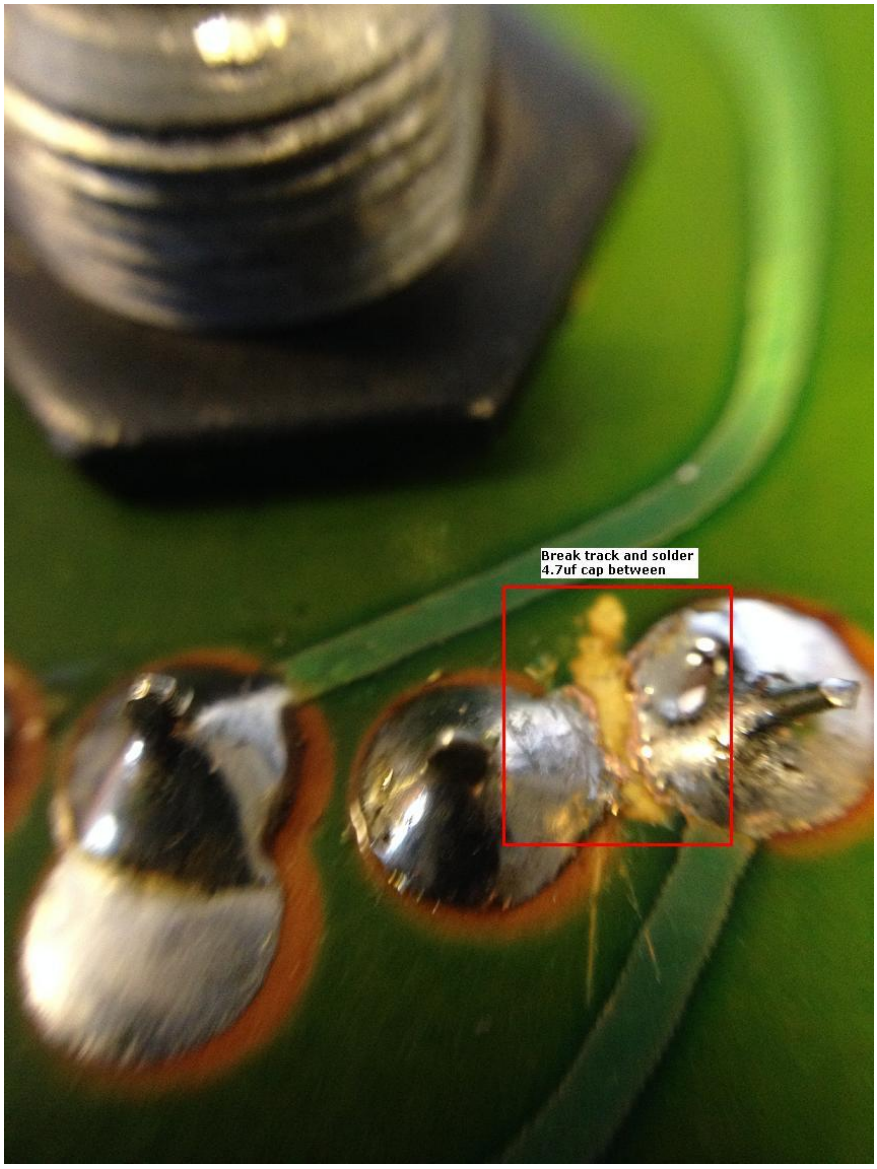
Break track and solder
4.7uf cap between

Sub Oscillator Mod

This mod is the most noticeable and gives the best sonic difference (along with the LFO mod), thickens the sound up very well.

Basically it's wiring up a 4013 IC on a piece of veroboard and inserting the circuit into the noise board's off position on the noise selector pot, the noise level pot controls the amount (as a note anything above 7 on level drowns out the waveforms output).

Here's 'Bluebears' description on wiring the mod:

Wiring it up in the SX-1000 is very easy. First, take the lid off. This involves undoing the 2 screws on the top at either side of the control panel and the four screws on the back at either end of the synth. Then you should be able to tilt the control panel backwards, lifting the front edge up, taking care with the cables.

With the control panel propped up like this, you should now be looking at the underside of the control panel, at the circuit boards. The left hand boards (looking at the synth from the front) are the two we're interested in.

The four wires for the sub oscillator are connected as follows:

- The +12V wire (red) is connected to the right hand (clock wise) leg of the Pulse Width pot.
- The 0V wire (black) is connected to the left hand (counter clock wise) leg of the Pulse Width pot.
- The output wire (grey) is connected to the right hand end of the Noise switch. This pin is unused; the other two are the white and pink noise signal inputs to the switch.
- The input wire (yellow) is tacked onto pin 9 of the 4013 chip as shown in the above diagram. I just soldered mine onto the chip leg as it sits in a socket on the board.
  (note: personally I found it much easier to remove the IC from the socket and tack to the shoulder of pin 9, then drop it back in the synth, due to little room around the socket)

Diagram for wiring up the IC:

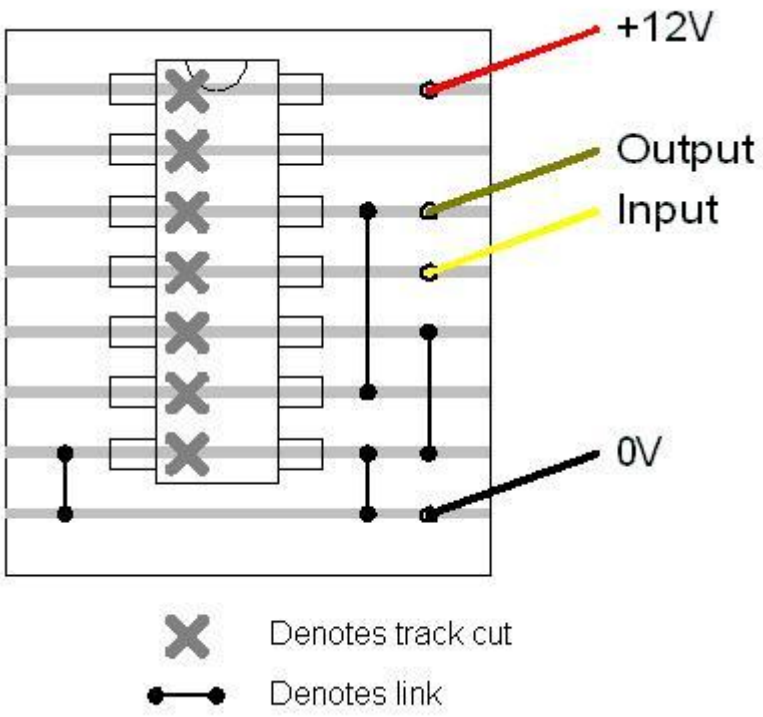

Diagram for wiring up to the synth

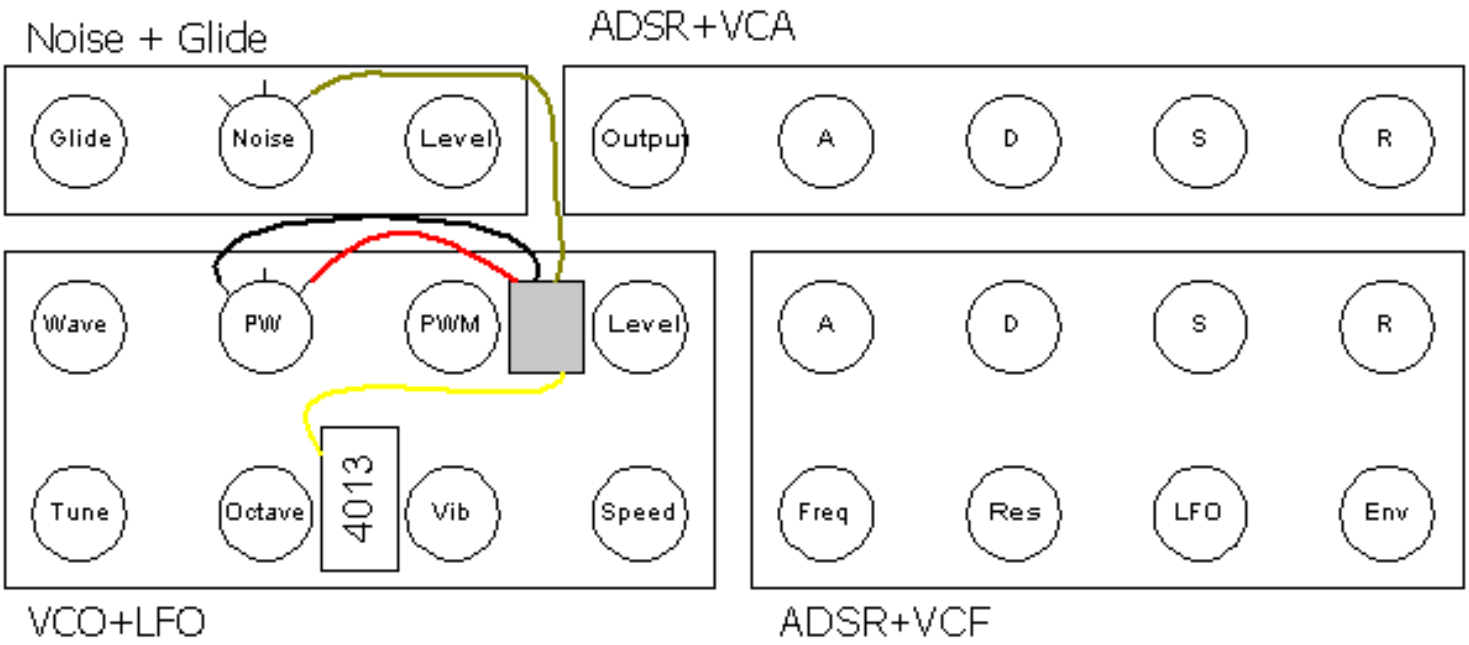

What it looks like:

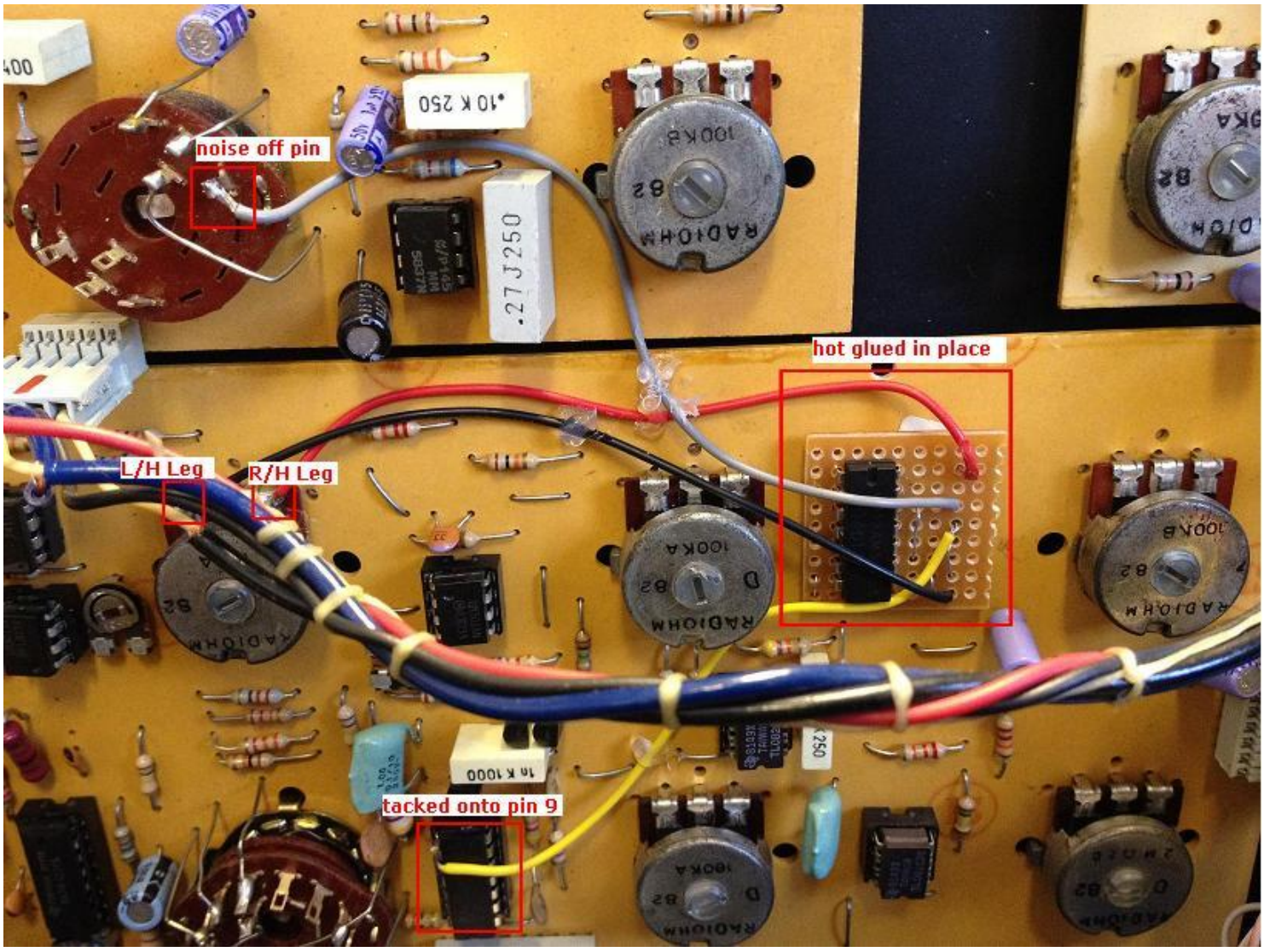

I used hot glue to stick the board to a blank area on the waveform PCB, less risky that drilling holes (and reversible if wanted).

LFO & VCF Audio Input mods

Neil Johnson's LFO mod is great, it add sawtooth up and down along to the triangle wave for the LFO plus extends the frequency range quite a lot. I had a little difficulty reading the circuit diagram for this (more of a statement on how shit I am at electronics than anything else), and the pictures show how I interpreted this, you may find a neater solution for earth points etc.

From Neils site:

LFO Wave Switch

The standard LFO generates one waveform, a triangle wave. Not happy with this, I have modified the LFO to both operate over a wider frequency range, and also do rising and falling ramps.

To select which waveform is generated I had to fit a switch to the front panel. The circuit for the modified LFO shows the components that have been added or changed (the original components are left unmarked). The switch determines the output waveform:

- **A** - rising ramp
- **B** - triangle
- **C** - falling ramp

The estimated frequency range of this LFO is 0.2Hz to 212Hz, enough to have plenty of possible uses.

For the basic modification (excluding the wave shape switch) just remove the switch and any corresponding components. Then the modification to the original Jen LFO (see schematic below) is made with the following five steps:

1. Remove 22k resistor from pot track (live end) to ground;
2. Replace 150k resistor with 4.7k resistor;
3. Add 100R resistor from pot trace cold side (CW 'blank' end) to ground;
4. Insert 47k resistor into pot wiper track;
5. Replace pot with 100k log pot.

Original LFO circuit:

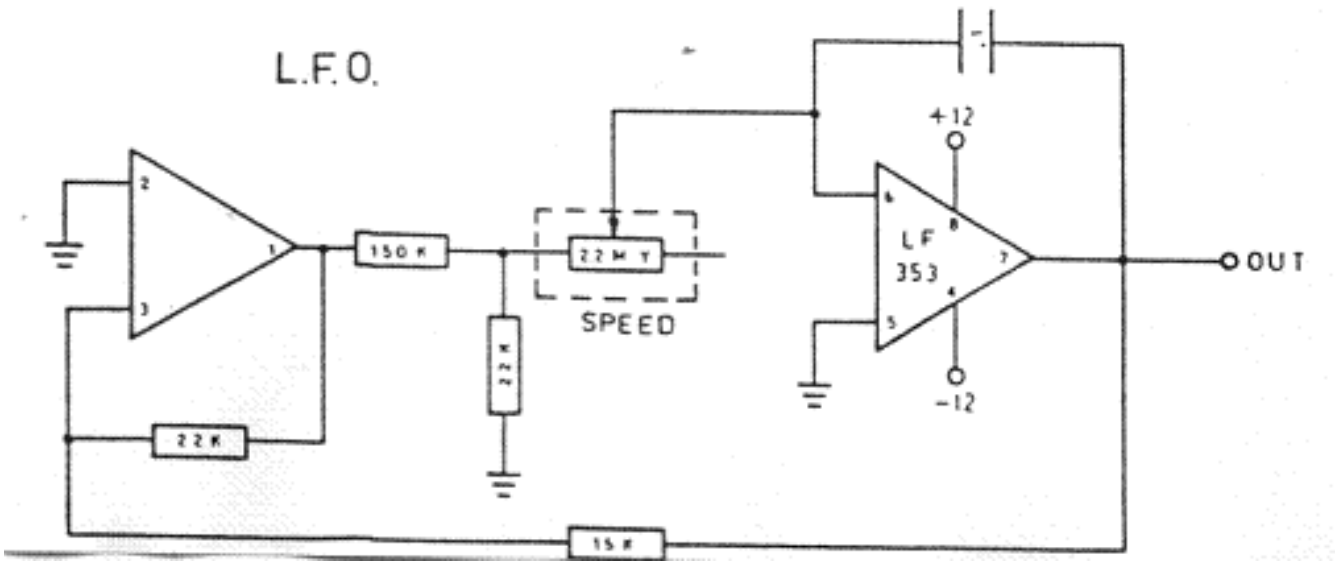

Modified:

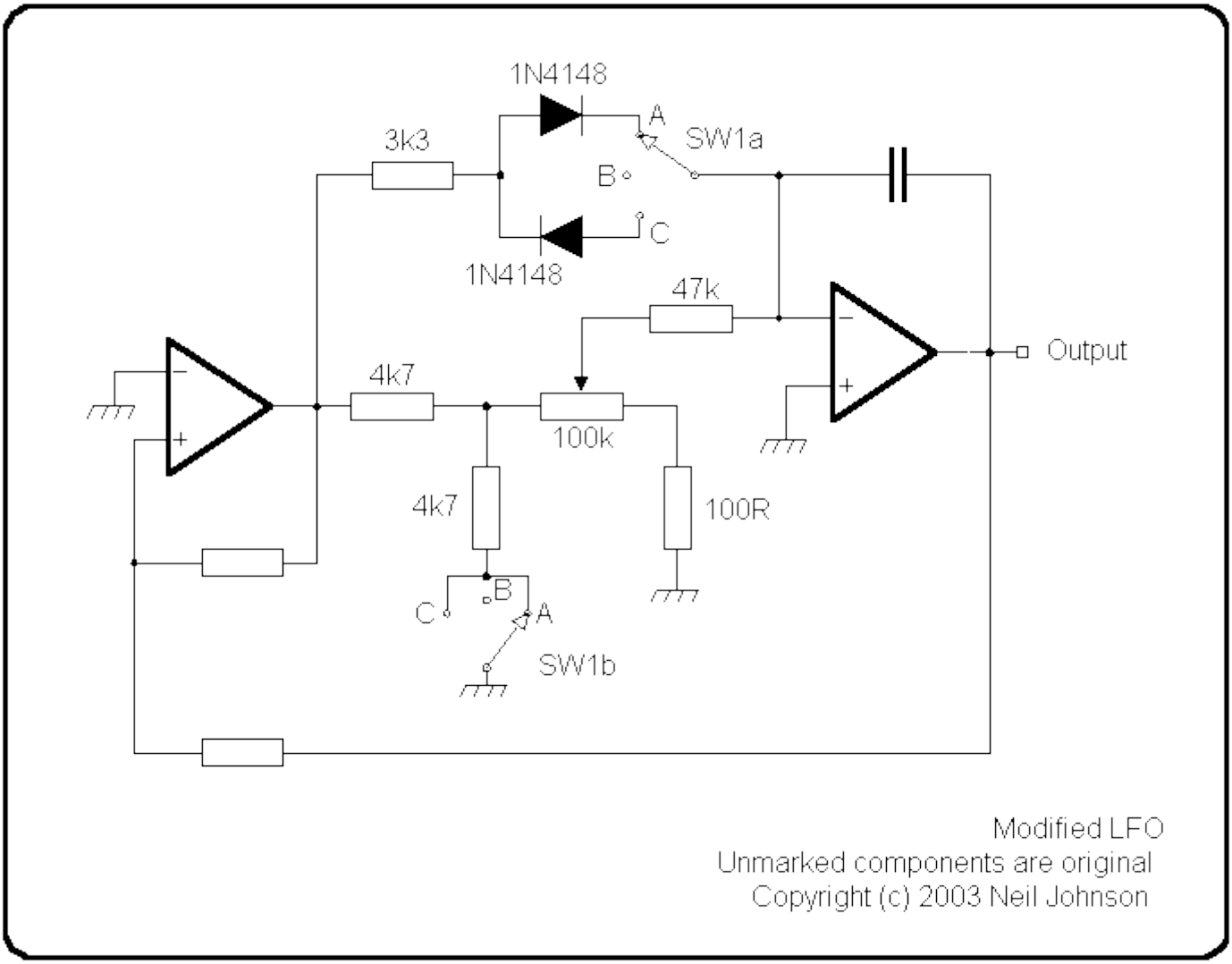

As it looks: 47k from replacement 100k pot:

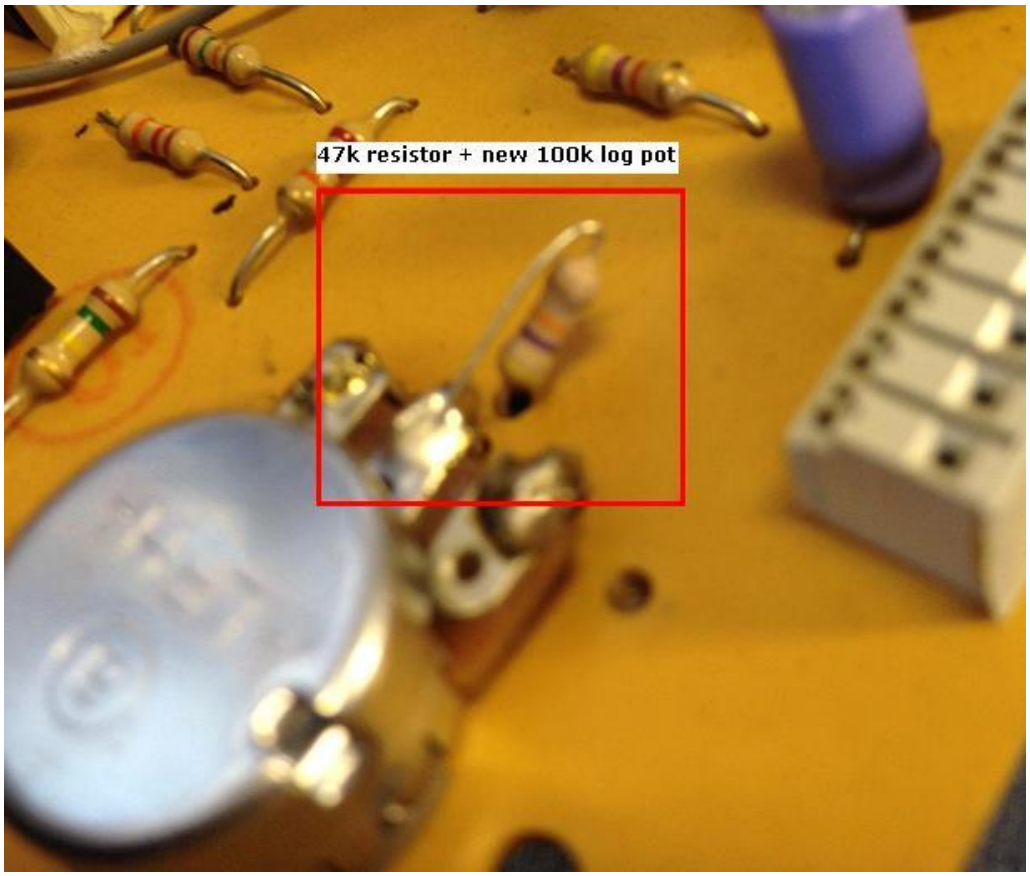

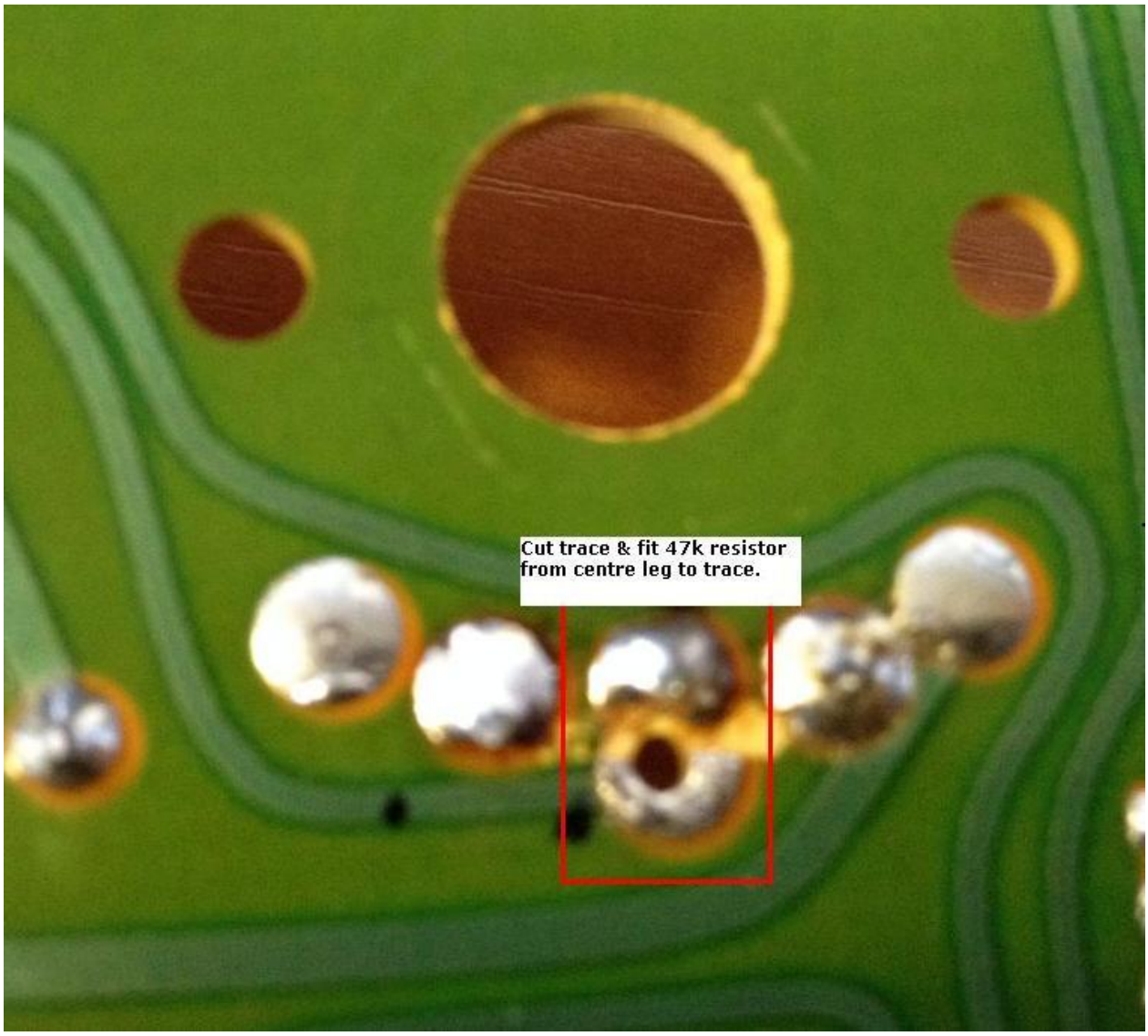

This is after the resistor swaps, before wiring up the lfo switch

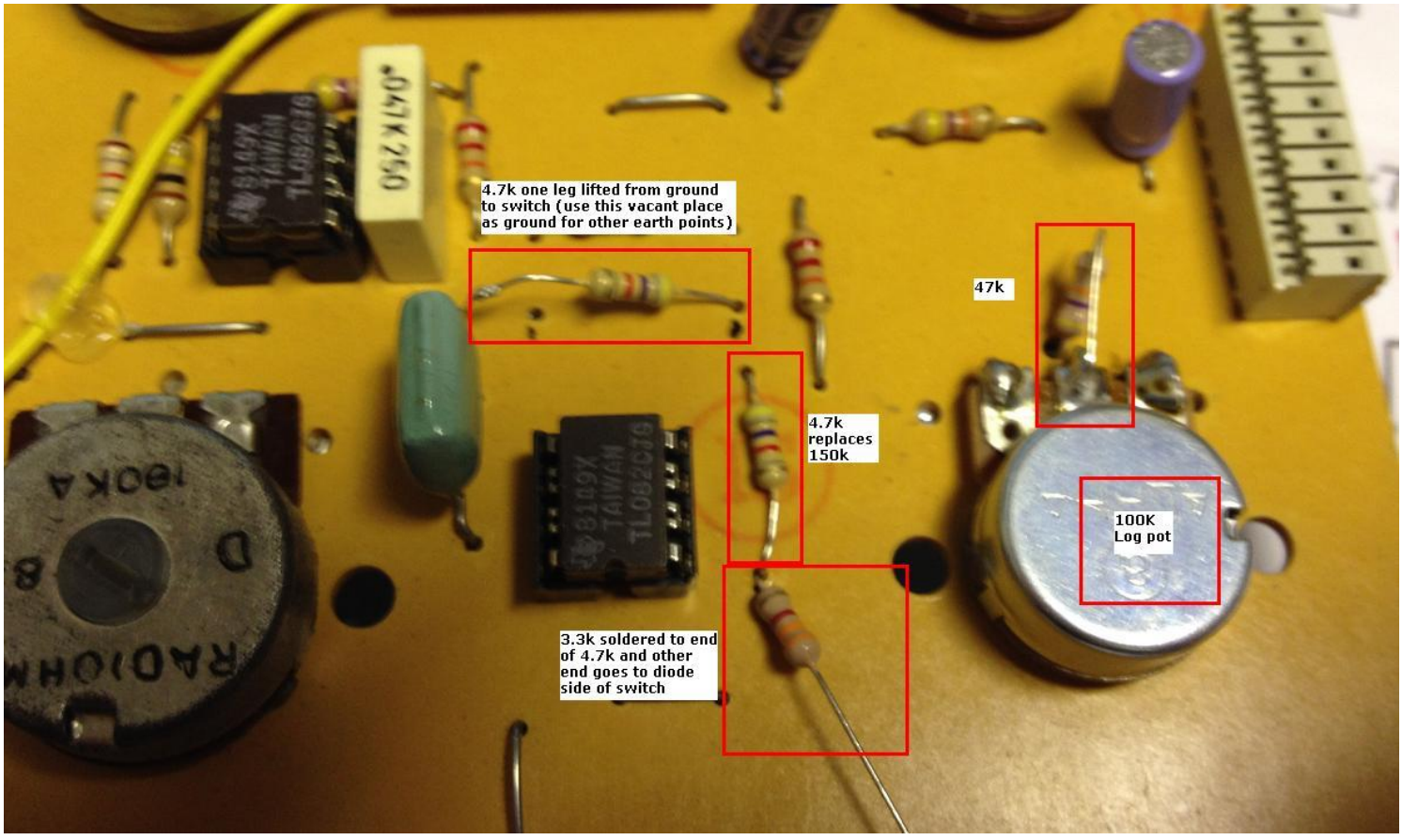

Looks a little messy here, but here it is soldered up to the switch (+ the VCF audio in socket):

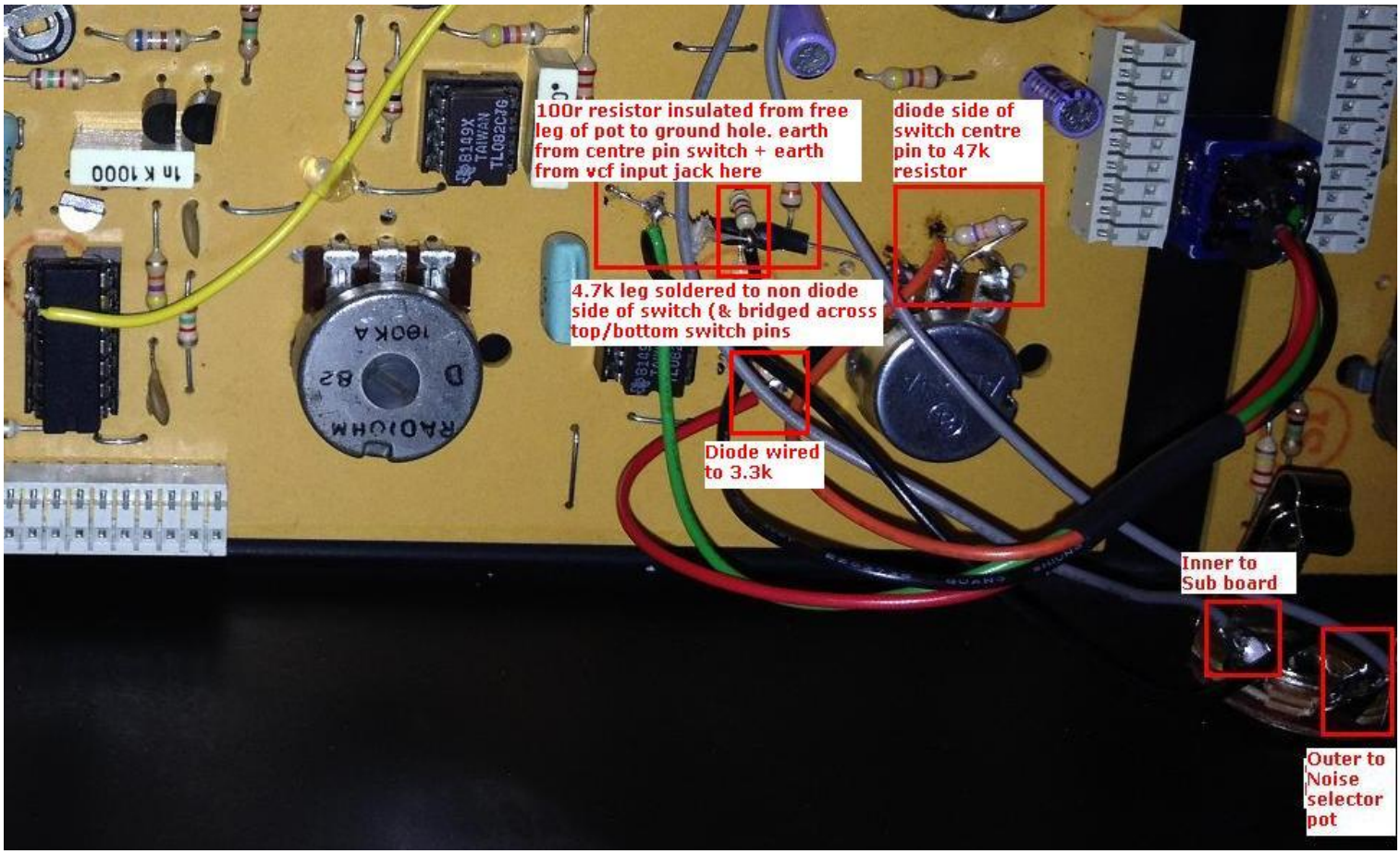

For the switch, wire one side of it with diodes on top and bottom pins facing opposite directions then twist free ends together and solder wire to this point, which goes off to the 3.3k resistor top (red wire in pic).

The centre pin on the switch diode side is wired to one end of the 47k resistor on the 100k new pot centre track (away from the pot side, orange in pic). For the other side of the switch, bridge the top & bottom pins together and this wire goes to the free side of the 4.7k resistor (black in pic on switch). The centre pin on this side goes to ground. Solder to the earth point on other side of 100R resistor (green in pic... yes I know I should've really used black for ground heh)

the switch 'almost' fits between the waveform + filter board, make sure you drill dead centre from the top between the two close lines near the LFO speed here (6mm hole), still it won't quite squeeze between them so use the lower nut to ensure the body of switch doesn't foul either board and can be still be tightened from the top.



VCF input

The external audio input to vcf is pretty straightforward, drill 10mm hole in back for the sockets and wire the inner ring of the switched socket to the sub board, and the outer ring to the off position on the noise selector pot. The earth goes to the 100R resistor (heat shrinked in pics) ground side.

With no external source in the sub mod works as normal, but with a jack in the socket this breaks the sub circuit but allows external audio source into the filter (albeit you have to hold a key down)

that's about it, I hope you can follow this OK. It might seem a little dumbed down if you have electronics knowledge.

Cross check my descriptions against the circuit diagrams, I think I've covered it but there's a possibility of an error in my description. Let me know how you get on.

Cheers,

Kev Atherton
http://kevinatherton.wordpress.com/
Kevin.atherton@gmail.com

ps As mentioned at the start, I am not the original author of these mods and take no credit, I have just collated a few I found on active and dead internet sites. The credits must goe to the below sites/people:

(don't know this guys name, but just look at his synth mod list!)
http://www.cykong.com/Synths/Jen%20SX1000/JenSX1000.htm

Neil Johnson's site is the holy grail of Jen SX1000 mod info:
http://www.milton.arachsys.com/nj71/index.php?menu=2&submenu=4&subsubmenu=1

Hakan Erikssons site from internet archive:
http://web.archive.org/web/20081108025809/http://www.etek.chalmers.se/~e5he/engindex.html

Bluebears site from internet archive:
http://web.archive.org/web/20040409215234/http://www.bluebear.org.uk/studio/sx1000/

And I got the initial basic sub oscillator mod from this page*: (which I think is Bluebears page also):
http://vintagesynthmanuals.com/docs/Jen/Jen%20SX-1000/subosc.htm

*note: the chip has 4017 showing on the diagram whereas the description mentions 4013, I fitted the 4013 IC.