# Schematic Amp Assembly EON Power15

These Drawings and Specifications are the Property of JBL Professional Inc. They are Issued in Strict Confidence and Shall Not Be Reproduced, Copied, or Used as the Basis for Manufacturing or Sale of Apparatus Without Written Permission.

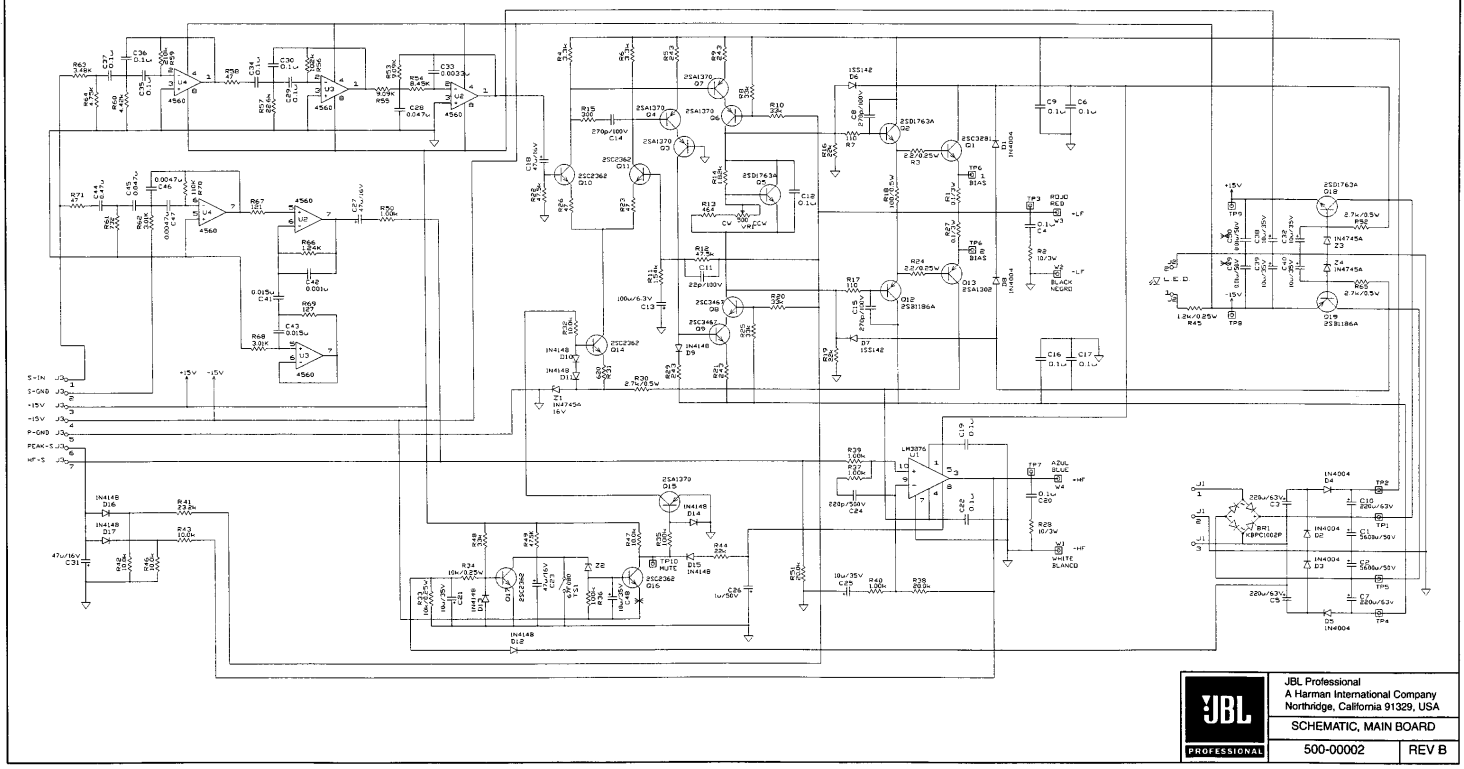

| | |
|---|---|
| JBL PROFESSIONAL | JBL Professional<br>A Harman International Company<br>Northridge, California 91329, USA |
| | SCHEMATIC, MAIN BOARD |
| | 500-00002 REV B |

# Schematic Signal Input Assembly EON Power15

These Drawings and Specifications are the Property of JBL Professional inc. They are Issued in Strict Confidence and Shall Not Be Reproduced, Copied, or Used as the Basis for Manufacturing or Sale of Apparatus Without Written Permission.

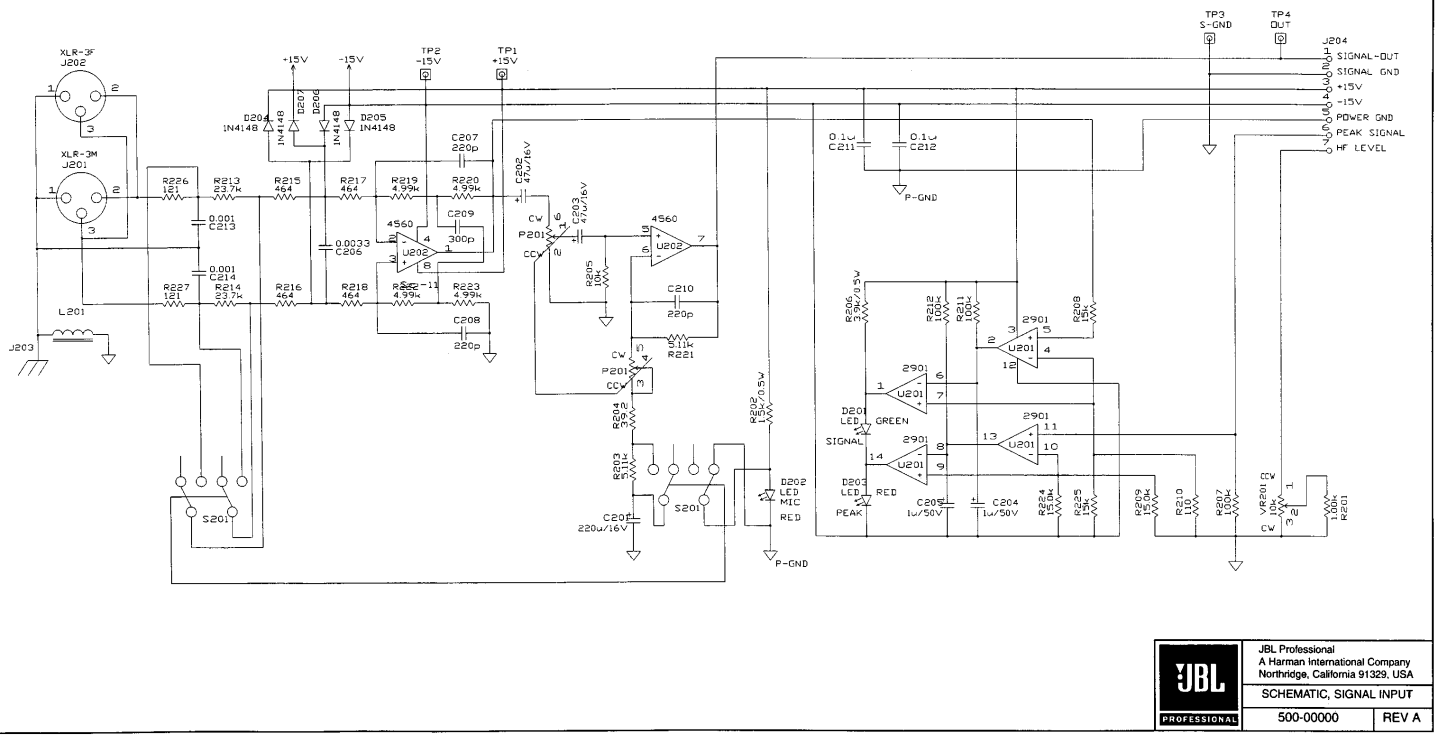


| | |
|---|---|
| JBL PROFESSIONAL | JBL Professional<br>A Harman International Company<br>Northridge, California 91329, USA |
| | SCHEMATIC, SIGNAL INPUT |
| | 500-00000 REV A |

# Schematic AC Input Assembly EON Power15

These Drawings and Specifications are the Property of JBL Professional Inc. They are Issued in Strict Confidence and Shall Not Be Reproduced, Copied, or Used as the Basis for Manufacturing or Sale of Apparatus Without Written Permission.

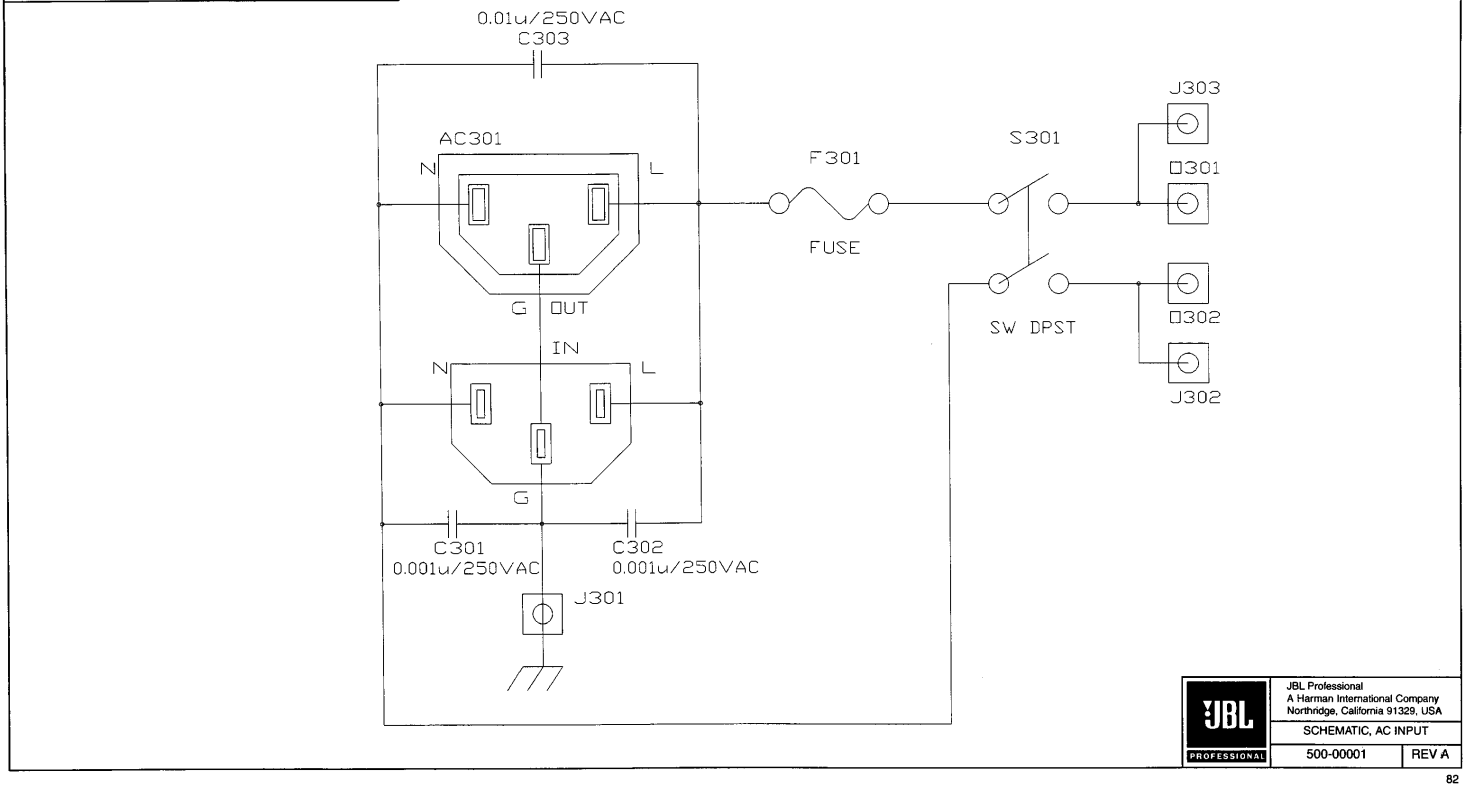


| | |
|---|---|
| JBL PROFESSIONAL | JBL Professional<br>A Harman International Company<br>Northridge, California 91329, USA |
| | SCHEMATIC, AC INPUT |
| | 500-00001 REV A |

# Parts List

## EON Power15, EON15P-1/230

| Reference | JBL Part # | Description |
|---|---|---|
| | 382 00013 02 | Bezel |
| | 382 00358 01 | Bezel (P-1) |
| | 923 00025 01 | Handle, 15" EON |
| | 950 00004 01 | Logo, Grille |
| | 128 00400 00 | Grille Assembly |
| | 321167-001 | Sealing Extrusion (Gasket) |
| | 321134-001 | Xmfr, AC, 120V |
| | 321134-002 | Xfmr, AC, 220/230V |
| | 562 00012 00 | Xfmr, AC, 100V |
| | 337974 001 | Xfmr, AC, 120/220V (P-1/230) |
| | 320733-001 | Owner's Manual, EON Series |
| | 337976 001 | Owner's Manual (P-1/230) |
| | 321101-001 | AC Power Cord, Edison |
| | 425 00000 01 | AC Power Cord, Schuko |
| | 705 90000 16 | Thumbscrew for Pole Mount |
| | 337083-003 | Label 110V (P-1) |
| | 337083-004 | Label 220V (P-1/230) |
| | **M5OS** | **EON MIC** |
| | 323672-001 | EON Mic & Holder |
| | 517-00009-00 | Capsule |
| | 60001H0632 | Clip |
| | 548-00013-00 | Switch Assy |
| | 1400M2104-J | Top Cover |
| | 517-00000-00 | Wind Screen Assy Black Ring |
| | 330-90001-02 | Rear Enclosure |
| | 991-00051-00 | Bottom Filler, 991-00051-00 Top Filler, 990-000022-00 Carton |
| | | |
| | **513 00001 80** | **AC Input PCB Power15/Sub, Complete Assembly** |
| | | **Use 321398-001 & 453-13402-00** |
| | **250-00001-01** | **AC Input PCB EON15P-1/230 *(see Drawing for BOM)** |
| C301 C302 | 613 55102 60 | CAP CERAMIC, 250VAC, 1000pF, 20%, RADIAL |
| C303 | 613 55103 70 | CAP CERAMIC, 250VAC, .01uF, +80/–20%, RADIAL |
| J101 | 424 00008 00 | CONN, IEC MALE & FEMALE, HORIZ, PCB |
| S101 | 546 00000 00 | SW, PWR, ROCKER, DPST, 10A, 250VAC, HORIZ, PCB |
| | 452 00000 00 | FUSE CLIP, 5mm, PCB |
| F301 | 453 13402 00 | FUSE, 4A Time Lag (120V Version only) |
| F301 | 453 13202 00 | FUSE, 2A Time Lag (220/230V Versions only) |
| F301 | 453 13502 00 | FUSE, 5A Time Lag (100V Version only) |
| | **513 00006 80** | **Signal Input PCB Power15, Complete Assembly** |
| | **337975-001** | **Signal Input PCB EON15P-1/230, Complete Assembly** |
| | 722 41100 05 | Screw, 6-20 x 5/16 Type-B, Ph Zinc, LCS Hard |
| | 729 41610 06 | Screw, Plastite, 3-24 x 3/8, Pan, Ph, BLK-CR, LCS |
| C201 | 600 02227 60 | CAP, ELEC, 85C, 16V, 220uF, 20%, RADIAL |
| C202 C203 | 600 02476 60 | CAP, ELEC, 85C, 16V, 47uF, 20%, RADIAL |
| C204 C205 | 600 05105 60 | CAP, ELEC, 85C, 50V, 1.0uF, 20%, RADIAL |
| C206 | 606 05332 50 | CAP, FILM, 50V, .0033uF, 5%, RADIAL |
| C207 C208 C210 | 613 08221 50 | CAP, CERAMIC, 100V, 220pF, 5%, NPO, RADIAL |
| C209 | 613 29301 51 | CAP, CERAMIC, 500V, 300pF, 5%, Y5E, RADIAL |
| C213 C214 | 606 05102 50 | CAP, FILM, 50V, .0010uF, 5%, RADIAL |
| C211 C212 | 613 08103 00 | CAP, CERAMIC, 100V, .010uF, 10%, Y5P, RADIAL |
| D204 D205 D206 D207 | 675 00000 00 | SEMI, DIODE, SIG, 75V, 200mA, 1N4148, DO-35 |
| D202 D203 | 678 00000 00 | SEMI, DIODE, LED, RED, DIFF, RND, 3MM, HORIZ |
| D201 | 678 00001 00 | SEMI, DIODE, LED, GREEN, DIFF, RND, 3MM, HORIZ |
| J201 | 424 00003 00 | CONN, XLR-M, HORIZ, PCB |
| J202 | 424 00002 00 | CONN, XLR-F, HORIZ, PCB |
| | 256 00000 00 | Cable Assy, EON, 7-Pin, Signal-Main |
| J204 | 424-00028 00 | CONN, SHROUDED HEADER, VERT 7-Pin, .100", PCB |
| P201 | 659 00006 00 | RES, POT, 12mm, HORIZ EIAJ, 5K15A, 5K15C |
| R201 | 631 21001 10 | RES, MF, 1/8W, 1.00K, 1% |
| R202 | 630 41501 50 | RES, CF, 1/2W, 1.5K, 5% |

# EON Power15, EON15P-1/230 (cont'd)

| Reference | JBL Part # | Description |
|---|---|---|
| R203 R205 R221 | 631 25111 10 | RES. MF, 1/8W 5.11K, 1% |
| R204 | 631 23926 10 | RES. MF, 1/8W 3.92, 1% |
| R206 | 630 43901 50 | RES. MF, 1/2W 3.9K, 5% |
| R207 R211 R212 | 630 21003 50 | RES, CF, 1/8W, 100K, 5% |
| R208 R224 R225 | 631 21502 10 | RES .MF, 1/8W 15.0K, 1% |
| R209 | 631 26981 10 | RES. MF, 1/8W 6.98K, 1% |
| R210 | 631 21100 10 | RES. MF, 1/8W 110, 1% |
| R213 R214 | 631 22372 10 | RES. MF, 1/8W 23.7K, 1% |
| R215 R216 R217 | 631 24640 10 | RES. MF, 1/8W 464, 1% |
| R219 R220 R222 R223 | 631 24991 10 | RES. MF, 1/8W 4.99K, 1% |
| R226 R227 | 631 21210 10 | RES. MF, 1/8W 121, 1% |
| VR201 | 660 00004 00 | RES, 6mm TRIM,CARBON, HORIZ, 1/10W. 10K |
| S201 | 548 00000 00 | SW, PUSH, 2.8mm SHAFT, 4P2T, HORIZ, PCB |
| U202 | 684 00003 00 | SEMI, IC-ANA, NJM4560D, DUAL OP-AMP, DIP-8 |
| U201 | 684 00006 00 | SEMI, IC-ANA, NJM2901N, QUAD COMP, DIP-14 |
| L201 | 471 00000 00 | Inductor, RF, Ferrite, Axial |
| | 923 00007 00 | Button, 7mm Round,2.8mm Shaft, Gray (EON Speaker) |
| | 923 00002 00 | Knob, 11mm, Gray, 6mm D-Shaft (EON Speaker) |
| | 923 00008 00 | Cap-Knob, 11mm, Gray, White Line (EON Speaker) |
| | | |
| | **513 00007 80** | **Amplifier PCB, Power15, Complete Assembly** |
| | 472 00000 00 | INSULATOR, MICA, TO3-P |
| | 472 00001 00 | INSULATOR, THERMALSIL, MULTIWATT CASE |
| | 840 90000 03 | Washer, #4, Shoulder, Black, Nylon, .031 Tall |
| | 701 90001 06 | Screw, 4-40 x 3/8 W/Sq-cone washer, Pan, Ph, Zinc |
| | 701 90002 08 | Screw, 4-40 x 1/2 W/Sq-cone washer, Pan, Ph, Zinc |
| BR1 | 676 00020 00 | SEMI, DIODE, BRIDGE, 200V, 10A KBPC1002P |
| C1 C2 | 604 05568 60 | CAP, ELEC, LARGE, 85C, 50V, 5600uF, 20%, PCB |
| C3 C5 C7 C10 | 600 06227 60 | CAP, ELEC, 85C, 63V, 220uF, 20%, RADIAL |
| C4 C20 | 610 20104 00 | CAP, MPROP, 250V, .1uF, 10%, HI-RIPPLE, RADIAL |
| C8 C14 C15 | 613 29271 51 | CAP, CERAMIC, 500V, 270pF, 5%, Y5E, RADIAL |
| C6 C9 C16 C17 C19 C22 C101 | 607 20104 50 | CAP, MFILM, 250V, .1uF, 5%, RADIAL |
| C11 | 613 29220 50 | CAP, CERAMIC, 500V, 22pF, 5%,NPO, RADIAL |
| C13 | 600 00107 60 | CAP, ELEC, 85C, 6.3V, 100uF, 20%,RADIAL |
| C12 C29 C30 C34 C35 C36 C37 | 608 05104 50 | CAP, SMFILM, 50V, .10uF, 5%, RADIAL |
| C18 C23 C27 C31 | 600 02476 60 | CAP, ELEC, 85C, 16V, 47uF, 20%, RADIAL |
| C21 C48 | 600 05106 60 | CAP, ELEC, 85C, 50V, 10uF, 20%, RADIAL |
| C24 | 613 08221 50 | CAP, CERAMIC, 100V, 220pF, 5%,NPO, RADIAL |
| C26 | 600 05105 60 | CAP, ELEC, 85C, 50V, 1.0uF, 20%, RADIAL |
| C28 C44 | 608 05473 50 | CAP, SMFILM, 50V .047uF, 5%, RADIAL |
| C25 C32 C38 C39 C40 | 600 04106 60 | CAP, ELEC, 85C, 35V, 10uF, 20%, RADIAL |
| C33 | 606 05332 50 | CAP, FLIM, 50V, .0033uF, 5%, RADIAL |
| C42 | 606 05102 50 | CAP, FILM, 5OV, .0010uF, 5%, RADIAL |
| C45 C46 C47 | 060 05472 50 | CAP, FILM, 50V, .0047uF, 5%, RADIAL |
| C41 C43 | 608 05153 50 | CAP, SMFILM, 50V .015uF, 5%, RADIAL |
| C49 C50 | 613 08103 00 | CAP, CERAMIC, 100V, .010uF, 10%, Y5P, RADIAL |
| D1 D2 D3 D4 D5 D8 | 676 00003 00 | SEMI, DIODE, SIG, RECT, 400V, 1A, 1N4004, DO-41 |
| D6 D7 | 675 00001 00 | SEMI, DIODE, SIG 250V, 200mA, 1SS142, DO-35 |
| D9 D10 D11 D12 D13 D14 D15 D16 D17 | 675 00000 00 | SEMI, DIODE, SIG, 75V, 200mA, 1N4148, DO-35 |
| Z1 Z3 Z4 | 677 00060 00 | SEMI, DIODE, ZENER, 16V, 1W, 1N4745A, DO-41 |
| Z2 | 677 00031 00 | SEMI, DIODE, ZENER, 24V, 500mW, 1N5252B, DO-35 |
| J1 | 424 00065 00 | CONN, MINI-FIT JR, HEADER, 1x3,PCB |
| J3 | 424 00028 00 | CONN, SHROUDED HEADER, VERT, 7-PIN, .100",PCB |
| J2 | 424 00023 00 | CONN, SHROUDED HEADER, VERT, 2-PIN, .100",PCB |
| Q1 | 682 00011 00 | SEMI, TRANSISTOR, NPN, PWR, 2SC3281, TO-3P(L) |
| Q2 Q5 Q18 | 682 00006 00 | SEMI, TRANSISTOR, NPN, PWR, 2SD1763A, TO-220FP |
| Q3 Q4 Q6 Q7 Q15 | 680 00007 00 | SEMI, X-ISTOR, PNP, SIG 2SA1370,SC-51 |

# EON Power15, EON15P-1/230 (cont'd)

| Reference | JBL Part # | Description |
|---|---|---|
| Q10 Q11 Q14 Q16 Q17 | 680 00010 00 | SEMI, X-ISTOR, NPN, SIG 2SC2362K, TO-92 |
| Q8 Q9 | 680 00008 00 | SEMI, X-ISTOR, NPN, SIG, 2SC3467, SC-51 |
| Q12 Q19 | 682 00007 00 | SEMI, TRANSISTOR, PNP, PWR, 2SB1186A, TO-220FP |
| Q13 | 682 00010 00 | SEMI, TRANSISTOR, PNP, PWR, 2SA1302, TO-3P(L) |
| R1 R27 | 632 71008 50 | RES, MOF, 3W, 0.10, 5% |
| R2 R28 | 632 71006 50 | RES, MOF, 3W, 10, 5% |
| R3 R24 | 633 32207 50 | RES, FUSE, 1/4W, 2.2, 5% |
| R4 R6 | 630 23301 50 | RES, CF, 1/8W 3.3K, 5% |
| R5 R9 R21 R29 | 631 22430 10 | RES, MF, 1/8W, 243, 1% |
| R7 R17 | 630 21100 50 | RES, CF, 1/8w, 110, 5% |
| R8 R10 R20 R25 | 630 23302 50 | RES, CF, 1/8W 33K, 5% |
| R11 | 631 21541 10 | RES, MF, 1/8W, 1.54K, 1% |
| R12 R22 R49 | 631 24752 10 | RES, MF, 1/8W, 47.5K, 1% |
| R13 | 631 24640 10 | RES, MF, 1/8W, 464, 1% |
| R14 | 631 21821 10 | RES, MF, 1/8W, 1.82K, 1% |
| R15 | 630 23000 50 | RES, CF, 1/8W, 300, 5% |
| R16 R19 R44 | 630 22202 50 | RES, CF, 1/8W, 22K, 5% |
| R18 | 630 41000 50 | RES, CF, 1/2W, 100, 5% |
| R23 R26 R58 R71 | 630 24706 50 | RES, CF, 1/8W, 47, 5% |
| R30 R52 R65 | 630 42701 50 | RES, CF, 1/2W, 2.7K, 5% |
| R31 | 630 26200 50 | RES, CF, 1/8W, 620, 5% |
| R32 R42 R43 R46 R47 | 631 21002 10 | RES, MF, 1/8W, 10.0K, 1% |
| R33 R34 | 630 41002 50 | RES, CF, 1/2W, 10K, 5% |
| R35 R36 | 630 21003 50 | RES, CF, 1/8W, 100K, 5% |
| R37 R39 R40 R50 | 631 21001 10 | RES, MF, 1/8W, 1.00K,1% |
| R38 R51 | 631 22002 10 | RES, MF,1/8W, 20.0K, 1% |
| R41 | 631 22322 10 | RES, MF, 1/8W, 23.2K, 1% |
| R45 | 630 31201 50 | RES, CF, 1/4W, 1.2K, 5% |
| R53 R55 | 631 29091 10 | RES, MF, 1/8W, 9.09K, 1% |
| R54 | 631 28451 10 | RES, MF, 1/8W, 8.45K, 1% |
| R56 | 631 21023 10 | RES, MF, 1/8W, 102K, 1% |
| R57 | 631 22262 10 | RES, MF, 1/8W, 22.6K, 1% |
| R59 | 631 22103 10 | RES, MF, 1/8W, 210K, 1% |
| R60 | 631 24421 10 | RES, MF, 1/8W, 4.42K, 1% |
| R61 | 631 27320 10 | RES, MF, 1/8W, 732, 1% |
| R62 R68 | 631 23011 10 | RES, MF, 1/8W, 3.01K, 1% |
| R63 | 631 23481 10 | RES, MF, 1/8W, 3.48K, 1% |
| R64 | 631 24751 10 | RES, MF, 1/8W, 4.75K, 1% |
| R66 | 631 21241 10 | RES, MF, 1/8W, 1.24K, 1% |
| R67 | 631 21210 10 | RES, MF, 1/8W, 121, 1% |
| R69 | 631 21270 10 | RES, MF, 1/8W, 127, 1% |
| R70 | 631 21103 10 | RES, MF, 1/8W, 110K, 1% |
| VR1 | 660 00013 00 | RES, 5mm, TRIM, CERMET, VERT, 1/2W, 500 |
| TS1 | 548 00006 00 | SW, THERM, CLOSE AT 80C, 67F080, TO-220/2 |
| U1 | 684 00014 00 | SEMI, IC-ANA, LM3876T, 100W, AUDIO AMP, TA11B |
| U2 U3 U4 | 684 00003 00 | SEMI, IC-ANA, NJM4560D, DUAL OP-AMP, DIP-8 |
| DS1 | 678 00007 00 | SEMI, DIODE, LED, GREEN, DIFF, RND, 3mm, VERT |
| | 819 90012 05 | SPACER, 3mm, LED, .310, VERT |
| P2 | 424 00037 00 | CONN, SPRING-BOX, 2-PIN, .100", IDC |
| | 321814 001 | CHRISTMAS TREE CLIP (P-1/230) |