SERVICE MANUAL

SUPERIOR SERIES

AMPLIFIER

S-4000

interM

COMPANY	INTER.M	APPLICANT	REVISED NUMBER AND DATE			SIGN	DRAWN	CHECKED	APPROVED	NOTE
TYPE CODE			1.	4.	7.					
APPROVED DATE			2.	5.	8.					
			3.	6.	9.					

SHEET NO.

SCHEMATIC DIAGRAM

MODEL : S-3000/4000 BLOCK DIAGRAM

VARIABLE SPEED FAN

P.T THERMAL SENSOR

DC OFFSET DETECTION INPUT/OUTPUT PROT

PROTECTION

• ON/OFF MUTING
• FULL SHORT PROT.

PROTECTION CONTROL

IDLE CONTROL THERMAL PROTECTION

+142 VOLTAGE SWITCHING STAGE

+94 VOLTAGE SWITCHING STAGE

-94 VOLTAGE SWITCHING STAGE

-142 VOLTAGE SWITCHING STAGE

FET

+142

+94

+46

-46

-94

-142

PT CENTER TAP

POWER AMPLIFIER

CH1 OUTPUT

HEAD AMP

CH1

INPUT 0dBV

PARALLEL
STEREO
BRIDGED-MONO

CLIP

+15V

-10dB

-20dB

SIGNAL

CLIP LIMITER/COMPRESSOR

LED DRIVE

ON

BRIDGED-MONO
STEREO
PARALLEL

CH2

INPUT 0dBV

SAME AS CH 1

CH2 OUTPUT

-15V

MAIN P.T

CHOKE

SWITCHING AND STEP-DOWN TRANSFORMER

P.T CENTER TAP

FUSE

POWER SW

MOSFET DRIVER

DRIVE TRANS

AC NOISE FILTER

AC120V/50~60Hz
AC220V/50~60Hz
AC230V/50~60Hz

ON:AC100V~120V
OFF:AC220V~240V

ON/OFF SWITCH

START UP

PWM CONTROLLER 115KHz

SHUTDOWN

PROTECTION CONTROL

COMPARATOR

STAND-BY SW

STAND-BY

CURRENT SENSING

SUB SIGNAL P.T

FOR POWER SUPPLY SWITCHING CONTROL CIRCUIT

ELECTRICAL PARTS LIST (S - 4000)

MAIN B'D (4005188900)

Ref No.	Part No.	Description	Value	Qty	Remark
C918 C929	3609103120-T	CAP MA 0.01UF 100V	MA0.01	2	
C701	3609332120-T	CAP MA 0.0033UF 100V	MA0.0033	1	
C702 C748 C943	3609102120-T	CAP MA 0.001UF 100V	MA0.001	3	
C709	3669474108	CAP MKP1845 0.47UF 400V	MKP 0.47/400	1	
C711 C714	3659101179	CAP MICA DM15 100PF 500V J	MI100P	2	
C718 C723 C725-726 C746-747 C752 C766 C911 C924	3639104255-T	CAP TL 104K 250V K SMA-4000	TL104K/250	10	
C738 C740 C732 C736	3639475255	CAP TL 475K 250V K	TL475K/250	4	
C727 C741 C724	3569105933-T	CAP CE MONO 1UF 50V Z SMA-4000	105MC	3	
C729 C753 C757-758 C762 C767 C769-770 C773-775 C907 C909 C917 C737 C931 C946-947 C949-950 C953-954	3569104933-A	CAP CE MONO 0.1UF 50VZSMA-4000	104MC	22	
C916 C928 C937	3609222120-T	CAP MA 0.0022UF 100V J	MA0.0022	3	
C777	3649104251	CAP ECQ-U2A104KV PANASONIC	ECQ0.1/250	1	
C772 C942 C771	3509221130-T	CAP CE SL 220PF 50V J	CE220P	3	
C920	3509470130-T	CAP CE SL 47PF 50V J	CE47P	1	
C938	3639224111-T	CAP ECQ-V 1H224JL2 0.22UF 50VJ	MA224	1	
C939 C908 C933	3659180179	CAP MICA DM15 18PF 500V J	MI18P	3	
C708 C703	3669225149	CAP MP PPT 2.2UF 200V J	2.2/200	2	
C944	3659270179	CAP MICA DM15 27PF 500V J	MI27P	1	
C941	3659331179	CAP MICA DM15 330PF 500V J	MI330P	1	
C906 C910	3609152120-T	CAP MA 0.0015UF 100V J	MA0.0015	2	
C749 C913	3509471130-T	CAP CE SL 470PF 50V J	CE470P	2	
C921 C932	3409847041-T	CAP AF NP 47UF25V 8 P	NP47/25	2	
C925	3409822121-T	CAP NP AF 220UF 10V	NP220/10	1	
C934 C948	3409847941-T	CAP AF NP 4.7UF 25V 6 P	NP4.7/25	2	
C704-705 C712-713	3419522295	CAP HC 2200UF 200V 40*50	2200/200	4	
C716-717 C719-722 C733-735 C742-744 C750-751 C755-756 C760-761	3408247187	CAP AF RZ 470UF 63V SNAP 13P	RZ470/63	18	
C730 C765 C768 C912 C914	3408247147	CAP AF RX 470UF 25V SNAP 10P	RX470/25	5	
C764 C776 C739 C763	3409210071-T	CAP AF RSG 10UF 50V 5 P	10/50	4	
C901-902 C919 C922-923 C926-927	3409247071-T	CAP AF RSG 47UF 50V 6 P	47/50	7	
C903 C945	3409210171-T	CAP AF RSG 100UF 50V 8 P	100/50	2	
C905 C904 C951-952	3409247131-T	CAP AF SG 470UF 16V 10X12.5	470/16	4	
C936 C935	3409222141-T	CAP AF RSG 220UF 25V J 8 P	220/25	2	
C759 C754	3408233141	CAP RSA 330UF 25V SNAP 10 P	330/25	2	
L700	2698009950	COIL TOROID RF 1.9UH S-4000	1.9uH	1	
L901	2648099800	COIL INDUTOR 2.2UF	2.2UH	1	
T701	2698009920	COIL TRANS 4P SMA-4000	COIL TRANS	1	
T702	2698009910	COIL TRANS 6P(DRIVE) SMA-4000	TRANS	1	
CN901	4428595002	LW5267/LWB0640/2.5MM-02P	BOX(SCREW)	1	
AN812	4428596604	LOCK WAFER LW-1143-04P	CH1143-4P	1	

CN705	4428595005	LW5267/LWB0640/2.5MM-05P	HEADER 5P	1	
CN903	4428598308	CONNECTOR WAFER LW-0640-8P	WAFER 8P	1	
AN101	4428591316	WAFER BOX GDSL-16-254 LATCH	BOX HEADER 16P	1	
D700	2058100998	DIODE KBPC3504	KBPC3504	1	
D701 D703 D723 D730 D734-735 D737 D739-741 D915-918 D921 D931 D933 D936 D940-943 D945-946	2058304100	DIODE IN4148M	1N4148	24	
D710-711 D906 D914 D934-935 D708-709	2058400995	DIODE 1N4935/4937 TAIWAN	1N4935	8	
D702 D704-705 D707	2058400997	DIODE HER305(UF5404) TAIWAN	HER305	4	
D727 D923-924 D927-928 D728-729 D725 D732 D726 D920 D738 D716	2058100996	DIODE RECTIFIER LT1N4006(4007)	1N4006	13	
D929 D902	2058100105	DIODE LT1N5402(1N5404) F	1N5402	2	
D910 D912	2058400996	DIODE IN4934 TAIWAN	1N4934	2	
D706 D712 D722 D733	2058300996	DIODE MUR1520 MOTOROLA	U1520	4	S-4000
D718 D720 D713-714	2058300995	DIODE MUR1540 MOTOROLA	U1540	4	
D717 D719	2058400999	DIODE SF1604G "C" TAIWAN	SF1604G-"C"	2	
D721 D724	2058400998	DIODE SF1604G "A" TAIWAN	SF1604G-"A"	2	
D715 D731 D901	2058310993	DIODE UZP-18B PYUNG CHANG	18BM/1W	3	
D742	2058500033	DIODE ZENER UZ-3.3B(1N5226B)	3.3BM	1	
D736 D913 D938-939 D947	2058501076	DIODE ZENER UZ-7.5B(1N5236B)	7.5BM	5	
D930	2058500969	DIODE ZENER 6.2B(1N5234B)	6.2BM	1	
D937 D919	2058512190	DIODE ZENER 10V 1W(IN4740A)	10BM/1W	2	
D903-904	2058510150	DIODE ZENER UZP-15BM(1N4744A)	15BM/1W	2	
L701-706	2648609800	FERRITE BEAD(10*12)MM SMA-4000	FERITE BEAD	6	
IC904-905	2178304090	IC HYBRID SWITCHING B	HYBRID B	2	S-4000
IC901-902	2178304091	IC HYBRID SWITCHING A	HYBRID A	2	S-4000
IC705	2118080340	IC BA10393 ROHM	BA10393	1	
IC703	2128514004	IC M74HC4024BIR STM	74HC4024	1	
IC704	2118031900	IC OSCILLATOR (7.3728MHZ)	OSC	1	
IC701	2118031700	CC TC1427CPA TELCOM	TC1427	1	
IC903 IC906-907	2168220982	IC NE5532(SIGNETICS)	NE5532N	3	
IC702	2118031800	IC SG3525AN SILICON GENERAL	SG3525	1	
CN701-703 CN902 CN904-905	4465998210	TERMINAL(250)PCB TAB	250TAB	6	
LD901	2300052101	LED LTL-307G-012A LITEON	GREEN	1	
TH701	2438200040	POSISTOR P42T7D100B04 PSR-2800	POSISTOR	1	
TH902	2438007995	POSISTOR PTFM04BH471Q2N34B0	H1	1	
RN701	3099222273	RES ARRAY 8POL 2.2K*4J	2.2K	1	
RN702	3099103273	RES ARRAY 8POL 10K*4	10K	1	
RN901	3099472273	RES ARRAY 8POL 4.7K*4	4.7K	1	
RN902	3099102273	RES ARRAY 8POL 1K*4	1K	1	
RN903	3099473273	RES ANR 08Y 473 J ARRAY	47K	1	
R704 R708 R736 R742 R979-980 R998 R1023	3002100953	RES CF 10K 1/5W F N	10KF	8	
R739 R723	3003715953	RES CF 7.15K 1/5W FN SMA-4000	7.15KF	2	
R706 R743 R718 R707	3009569973	RES CF 5.6 1/5W JN SMA-4000	5.6	4	
R745	3009124973	RES CF 120K 1/5W J N	120K	1	
R741 R991-992	3009394973	RES CF 390K 1/5W J N	390K	3	
R990	3002680953	RES CF 68K 1/5W F N	68KF	1	

R993	3009184973	RES CF 180K 1/5W J N	180K	1	
R729	3009273973	RES CF 27K 1/5W J N	27K	1	
R1009 R968	3009334973	RES CF 330K 1/5W J N	330K	2	
TH901	2438200060	THERMISTOR NTC5D-400KPC	THERMISTOR	1	
R720 R740 R995 R1013-1014	3003221953	RES CF2.21K 1/5W FN SMA-4000	2.21KF	5	
R733 R951 R974	3002392953	RES CF 39.2K 1/5W F N	39.2KF	3	
R737 R940 R1001 R725 R728	3004280953	RES CF 280 1/5W FN	280F	5	
R902 R1002 R1004 R1010 R1016 R1020	3002121953	RES CF 12.1K 1/5W F N	12.1KF	6	
R916 R912	3003866953	RES CF 8.66K 1/5W FN	8.66KF	2	
R919 R922 R936 R939 R959	3005475953	RES CF 47.5 1/5W FN SMA-4000	47.5F	5	
R932 R929	3002931953	RES CF 93.1K 1/5W F N	93.1KF	2	
R937 R949 R973	3003453953	RES CF 4.53K 1/5W FN SMA-4000	4.53KF	3	
R738 R942 R938 R734-735 R907 R1018 R1022	3004953953	RES CF 953 1/5W FN SMA-4000	953F	8	
R956 R1017 R1021	3002976953	RES CF 97.6K 1/5W F N	97.6KF	3	
R960 R969 R724	3004464953	RES CF 464 1/5W FN SMA-4000	464F	3	
R964 R913	3004536953	RES CF 536 1/5W F N	536F	2	
R967 R982 R988	3002210953	RES CF 21K 1/5W FN SMA-4000	21KF	3	
R926 R962-963 R918 R958 R930	3003348953	RES CF 3.48K 1/5W FN SMA-4000	3.48KF	6	
R985 R971	3004475953	RES CF 475 1/5W FN SMA-4000	475F	2	
R987 R1007 R954	3003590953	RES CF 5.9K 1/5W FN SMA-4000	5.9KF	3	
R997 R746 R914	3009473973	RES CF 47K 1/5W J N	47K	3	
R903 R1015 R965 R1019	3003162953	RES CF 1.62K 1/5W FN SMA-4000	1.62KF	4	
R1006 R1005	3004237953	RES CF 237 1/5W FN	237F	2	
R977	3005562953	RES CF 56.2 1/5W FN SMA-4000	56.2F	1	
R1011-1012	3004100953	RES CF 100 1/5W FN SMA-4000	100F	2	
R999 R984 R1024	3009151973	RES CF 150 1/5W J N	150	3	
R943	3009330973	RES CF 33 1/5W J N	33	1	
R950 R721 R748	3009750973	RES CF 75 1/5W JN	75	3	
R953 R996	3009223973	RES CF 2.2K 1/5W J N	22K	2	
R976	3003931953	RES CF 9.31K 1/5W FN SMA-4000	9.31KF	1	
R1003	3002680953	RES CF 68K 1/5W F N	68KF	1	
R747	3039181472-T	RES MO 180 1W J T	180/1W	1	
R749 R983 R986	3039150472-T	RES MO 15 1W J N	15/1W	3	
R905 R904	3039223574	RES MO 22K 2W	22K/2W	2	S-4000
R908 R915 R917 R933 R935 R957 R961 R975 R978 R901 R989 R994	3059228673	RES CE 0.22 3W J RQA T.H	0.22/3W	12	
R928 R972	3039339572-F	RES MO 3.3 2W JN SMA-4000	3.3/2W	2	
R921 R925 R927	3059302773	RES CE 3K 5W J M	3K/5W	3	
R906	3039271572-F	RES MO 270 2W J N	270/2W	1	
R947	3039399572-F	RES MO 3.9 2W JN SMA-4000	3.9/2W	1	
R945	3039183572-F	RES MO 18K 2W JN SMA-4000	18K/2W	1	
R1000	3039689572-F	RES MO 6.8 2W J N	6.8/2W	1	
R700	3039560572-F	RES MO 56 2W J N	56/2W	1	
R701-702 R909-910 R923-924	3039473574	RES MO 47K 2W	47K/2W	6	
R711 R713-714	3039220572-F	RES MO 22 2W J N	22/2W	10	

R726-727 R731-732 R911 R710 R981					
R717	3039472572-F	RES MO 4.7K 2W J N	4.7K/2W	1	
R719	3059103773	RES CE 10K 5W J N	10K/5W	1	
R744 R712 R709 R730	3039279572-F	RES MO 2.7 2W J N	2.7/2W	4	S-4000
R705 R703	3039150572-F	RES MO 15 2W JN SMA-4000	15/2W	2	
R931 R934 R946 R948	3039100674	RES MO 10 3W J P	10/3W	4	
R955	3039103572-F	RES MO 10K 2W JR	10K/2W	1	
R716	3039150472-T	RES MO 15 1W J N	15/1W	1	
R952	3059018803	RES CE 0.01 10W F AXIAL	0.01/10W	1	
Q703-708 Q710-711	2048209999	FET FQP50N06 (IRFZ44)	FQP50N06	8	
T703	2828069610	TRANS MAIN SWITCHING 20P S4000	MAIN TRANS	1	
Q701-702	2028900101	IGBT N-CH IRG4PC50W IXR	IRG4PC5W	2	
Q712 Q714 Q902 Q916 Q925 Q931 Q933 Q936-938 Q941	2008405998-T	2N3904-AT	2N3904	11	
Q923 Q929-930 Q915 Q919-920	2028407122	TR NPN 2SC5200 TOSHIBA	2SC5200	6	
Q908	2028407995	TR NPN MJE15032(MOTOROLA)	MJE15032	1	
Q904	2028406114	TR KTD2059-Y-U	KTD2059Y	1	
Q928	2028348100-T	TR NPN MPSW01A MOTOROLA	MPSW01	1	
Q914	2008448099-T	TR NPN MPSA44 MOTOROLA	MPSA44	1	
Q921	2008448100-T	TR NPN MPSA13 MOTOROLA	MPSA13	1	
Q709 Q713 Q901 Q912 Q922 Q926-927 Q932 Q934-935 Q939-940	2008005998-T	2N3906-AT	2N3906	12	
Q905-906 Q909-911 Q903	2028107118	TR PNP 2SA1943 TOSHIBA	2SA1943	6	
Q924	2028048100-T	TR PNP MPSW51A MOTOROLA	MPSW51	1	
Q913	2008006100-T	TR PNP UPSA92 KEC	UPSA92	1	
Q918	2028107995	TR PNP MJE15033 (MOTOROLA)	MJE15033	1	
VR901 VR903	3248322220	RES SEMI RH0615C100222	2.2K	2	
VR902	3248310120	RES SEMI RH0615C100101	100	1	

INPUT B'D (4005188820)

C301-302 C401-402	3509221231-A	CAP CE B 220PF 50V K AXIAL	CE220P	4	
C403-404	3569104933-A	CAP CE MONO 0.1UF 50VZSMA-4000	104MC	2	
C31	3409247131-T	CAP AF SG 470UF 16V 10X12.5	470/16	1	
C32-33	3409210141-T	CAP AF RSG 100UF 25V 6 P	100/25	2	
CNO2	4428592516	WAFER BOX PIN 16P (PC-1635)	WAFER BOX 16P	1	
CNO1	4428592526	WAFER BOX TPHB03-1419-26A	BOX HEADER 26P	1	
D31	2058304100	DIODE IN4148M	1N4148	1	
IC301 IC401	2168220982	IC NE5532(SIGNETICS)	5532N	2	
JK302 JK402	4438090310	JACK COMBINATION CXLF-06L	PHONE JACK	2	
JK301 JK401	4438094110	XLR MAIL 3PIN E3MSTM3	SPEACON	2	
LD31-32	2308252262-T	SLR-54GGA 49	GRE	2	
R31	3005475953	RES CF 47.5 1/5W FN SMA-4000	47.5F	1	
R32	3009330973	RES CF 33 1/5W J N	33	1	
R33 R302 R308 R402 R408	3003100953	RES CF 1K 1/5W F N	1KF	5	
R34	3002100953	RES CF 10K 1/5W F N	10KF	1	
R303 R309 R403 R409	3003909953	RES CF 9.09K 1/5W F N	9.09KF	4	
R307 R401 R407 R301	3002200953	RES CF 20K 1/5W F N	20KF	4	
R38-39	3009101973	RES CF 100 1/5W J N	100	2	
R305 R404-406 R304	3003200953	RES CF 2K 1/5W FN SMA-4000	2KF	8	

R310 R306 R410					
SW31	4625996110	SW SLIDE JSS 4319A 4C-3P	JSS4319	1	

DISPLAY B'D (4005188840)

AN705	4355843805	CON ASS'Y 5P SMA-4000	CON 5P	1	
LD1	2308252262	LED REF SLR-54MG R5 GRE ROHM	GRE	1	
LD2	2308252222	LED REF SLR-54UR R5 RED ROHM	RED	1	
LD3	2308252302	LED REF SLR 54DU R5 YEL	YEL	1	
RO4	3009271973	RES CF 270 1/5W J N	270	1	
RO1 RO3 RO6-7	3003100953	RES CF 1K 1/5W F N	1KF	4	
RO2	3002100953	RES CF 10K 1/5W F N	10KF	1	
RO5	3009472973	RES CF 4.7K 1/5W J N	4.7K	1	
Q4-5	2008405998-T	2N3904-AT	2N3904	2	

OUTPUT B'D (4005188850)

C501-502	3639104255-T	CAP TL 104K 250V K SMA-4000	104K/250V	2	
C503-504	3639474255	CAP TL 474K 250V K	474K/250V	2	
CGND1	4355866503	RING TERMINAL 100MM	GND	1	
JK1-2	4438191710	BINDING POST (2P) DOM.UL	BINDING POST	2	
ANL904-905 ANR904-905	4465998210	TERMINAL(250)PCB TAB	250TAB	4	

CONTROL B'D (4005188810)

C6-8 C106 C206	3569104933-T	CAP MONO CE 0.1UF 50V	104MC	5	
C203 C103	3639224111-T	CAP ECQ-V 1H224JL2 0.22UF 50VJ	0.22M	2	
C1-2	3409847041-T	CAP AF NP 47UF25V 8 P	NP47/25	2	
C107 C207	3409847941-T	CAP AF NP 4.7UF 25V 6 P	NP4.7/25	2	
C3 C9	3409222141-T	CAP AF RSG 220UF 25V J 8 P	220/25	2	
C5 C4 C104-105 C204-205	3409210071-T	CAP AF RSG 10UF 50V 5 P	10/50	6	
C10-11	3409210171-T	CAP AF RSG 100UF 50V 8 P	100/50	2	
CN101 CN201	4428592516	WAFER BOX PIN 16P (PC-1635)	WAFER BOX 16P	2	
AN1	4428592526	WAFER BOX TPHB03-1419-26A	BOX HEADER 26P	1	
BR101 BR201	2058100977	DIODE BRIDGE DB103G/105G TAIWA	DB103	2	
D100-101 D200-201	2058304100	DIODE IN4148M	1N4148	4	
IC103 IC203	2128000748	IC 4N30 MOTOROLA	4N30	2	
IC101 IC201	2168220982	IC NE5532(SIGNETICS)	5532N	2	
IC2	2118032126	IC LM13600AN NATIONAL	LM13600AN	1	
IC102 IC202	2118032040	IC BA6124 ROHM	BA6124	2	
LD101 LD201	2308252262	LED REF SLR-54MG R5 GRE ROHM	GRE	2	
LD103 LD102 LD202-203	2308252302	LED REF SLR 54DU R5 YEL	YEL	4	
LD104 LD204	2308252222	LED REF SLR-54UR R5 RED ROHM	RED	2	
R1-2 R11-12	3005475953	RES CF 47.5 1/5W FN SMA-4000	47.5F	4	
R5 R4 R13-14 R108 R118 R208 R218	3003357953	RES CF 3.57K 1/5W FN SMA-4000	3.57KF	8	
R8 R105 R117 R119 R121 R205 R217 R219 R221	3002100953	RES CF 10K 1/5W F N	10KF	9	
R104 R124-125 R204 R224-225 R300	3009101973	RES CF 100 1/5W J N	100	7	
R111 R25 R28 R122 R24 R6 R211 R7 R222 R9	3002200953	RES CF 20K 1/5W F N	20KF	10	
R113 R106 R206 R213	3009394973	RES CF 390K 1/5W J N	390K	4	
R114 R214	3009392973	RES CF 3.9K 1/5W J N	3.9K	2	

R128 R123 R116 R223 R228	3003562953	RES CF 5.62K 1/5W FN SMA-4000	5.62KF	5	
R100 R112 R212 R3	3003200953	RES CF 2K 1/5W FN SMA-4000	2KF	4	
R209 R109	3009750973	RES CF 75 1/5W JN	75	2	
R201 R26	3009472973	RES CF 4.7K 1/5W J N	4.7K	2	
R115	3002130953	RES CF 13K 1/5W FN SMA-4000	13KF	1	
R126 R226	3002348953	RES CF 34.8K 1/5W FN SMA-4000	34.8KF	2	
R202 R101	3003100953	RES CF 1K 1/5W F N	1KF	2	
R220 R120	3004536953	RES CF 536 1/5W F N	536F	2	
R207 R107	3004649953	RES CF 649 1/5W FN SMA-4000	649F	2	
R103	3002124953	RES CF 12.4K 1/5W FN SMA-4000	12.4KF	1	
R210 R110	3004200953	RES CF 200 1/5W F N	200F	2	
R203	3003162953	RES CF 1.62K 1/5W FN SMA-4000	1.62KF	1	
R102	3003976953	RES CF 9.76K 1/5W FN SMA-4000	9.76KF	1	
SW1-2	4628987210	SW SPEC122SC051	SW	2	
Q2-3 Q6 Q103 Q203	2008405998-T	2N3904-AT	2N3904	5	
Q101-102 Q201-202 Q204-205	2008005998-T	2N3906-AT	2N3906	6	
VR101 VR201	3228075410	VR PI16 10KB (21 DETENT)	10KB	2	

AC POWER B'D (4005188800)

AC1	4355806910	AC CABLE SMA-4000 DOM	AC CABLE	1	
C801 C807	3649474251	CAP ECQ-U2A474KV PANASONIC	UV0.47/250	2	
C803-804	3549332107	CAP CE 3300PF 400V SCB	0.0033	2	
C805-806 C808	3549222091	CAP DE2E3KH222MA3B	0.0022	3	
C802	3649104251	CAP ECQ-U2A104KV PANASONIC	UV0.1/250	1	
C809	3509103450-T	CAP CE 0.01UF 500V Z	0.01/500	1	
L801-803	2698009930	COIL TOROID 2MH-20AMP SMA-4000	2MH-20A	3	
CN812	4428596604	LOCK WAFER LW-1143-04P	CH-1143-04P	1	
F1-2	5508224230	FUSE NB 31.8MM 15A/250V KS	15A	2	시판
F3	5508412239	FUSE#218T 20MM 1A/250V UCSKJ	1A	1	
E801-802	4465998210	TERMINAL(250)PCB TAB	250TAB	2	
R803-806	2438200100	THERMISTOR POWER NTC 0.5D-30	30A	4	
R801-802	3039754574	RES MO 750K 2W	750K/2W	2	
SW15	4625996611	SW POWER(C1350AT) ARCOLECTRIC	SW POWER	1	시판
CN801-810	4465998210	TERMINAL(250)PCB TAB	250TAB	10	
CN811	4465996202	SCREW TERMINAL 2P	SCREW TERMINAL2	1	
T801	2828069500	TRANS POWER S-3000/4000	5.0VA	1	

COMPANY	INTER.M	APPLICANT	REVISED NUMBER AND DATE			SIGN	DRAWN	CHECKED	APPROVED	NOTE
TYPE CODE			1.	4.	7.					
APPROVED DATE	2002. 12. 13		2.	5.	8.		Song			
			3.	6.	9.					

4000MA.SCH

SHEET NO.

SCHEMATIC DIAGRAM

MODEL : S-4000 MAIN

*SERVICE INFORMATION

1.RESISTANCE VALUES ARE INDICATED IN OHMS UNLESS OTHERWISE SPECIFIED. (K=1,000, M=1,000,000)
2.CAPACITANCE VALUES ARE SHOWN IN MICROFARADS UNLESS OTHERWISE NOTED. (P=MICRO-MICROFARADS)
3.ALL VOLTAGES ARE REFERED TO GROUND UNDER THE FOLLOWING CONDITIONS.
DC:NO SIGNAL EXCEPT WHERE INDICATED.
AC:RMS
4.-PRECAUTION-
A)ALL COMPONENTS⚠MARKED MUST BE REPLACED ONLY WITH ORIGINAL TYPE SPECIFIED BY THE MANUFACTURER. INTER M CORPORATION AND INSTALLED AS THE ORIGINAL SPACE AND POSITIONED AWAY FORM ADJACENT COMPONENTS WHERE APPLICABLE.
B)ALL SOLDERING MUST BE DONE IN A PROFESSIONAL MANNER USING SOLDER WHITE RESINE CORE ONLY.
C)ALL COVERS. SHIELD AND INSULATING SPACERS MUST BE REPLACED BEFORE RETURING APPLIANCE TO CUSTOMER.
D)A DAMAGE POWER SUPPLY CORD MUST BE REPLACED BEFORE RETURING TO CUSTOMER.
E)DIELECTRIC TEST CONSISTING OF 120V AC 60HZ IS TO BE APPLIED BETWEEN BOTH BALDES OF THE POWER SUPPLY CORD ATTACHMENT PLUG THE EXPOSE CONDUCTIVE SURFACE OF THE APPLIANCE FOR A PERIOD OF NOT LESS THAN ONE SECOND BEFORE RETURING APPLIANCE TO CUSTOMER.
F)THE ⚠ MARKED RESISTORS ARE MOUNTED THE P.C.B ON SLEEVES.

COMPANY	INTER.M	APPLICANT	REVISED NUMBER AND DATE			SIGN	DRAWN	CHECKED	APPROVED	NOTE	SHEET NO.	SCHEMATIC DIAGRAM
TYPE CODE			1.	4.	7.							MODEL : S-4000/3000 INPUT
APPROVED DATE			2.	5.	8.						4000IN.SCH	
			3.	6.	9.							

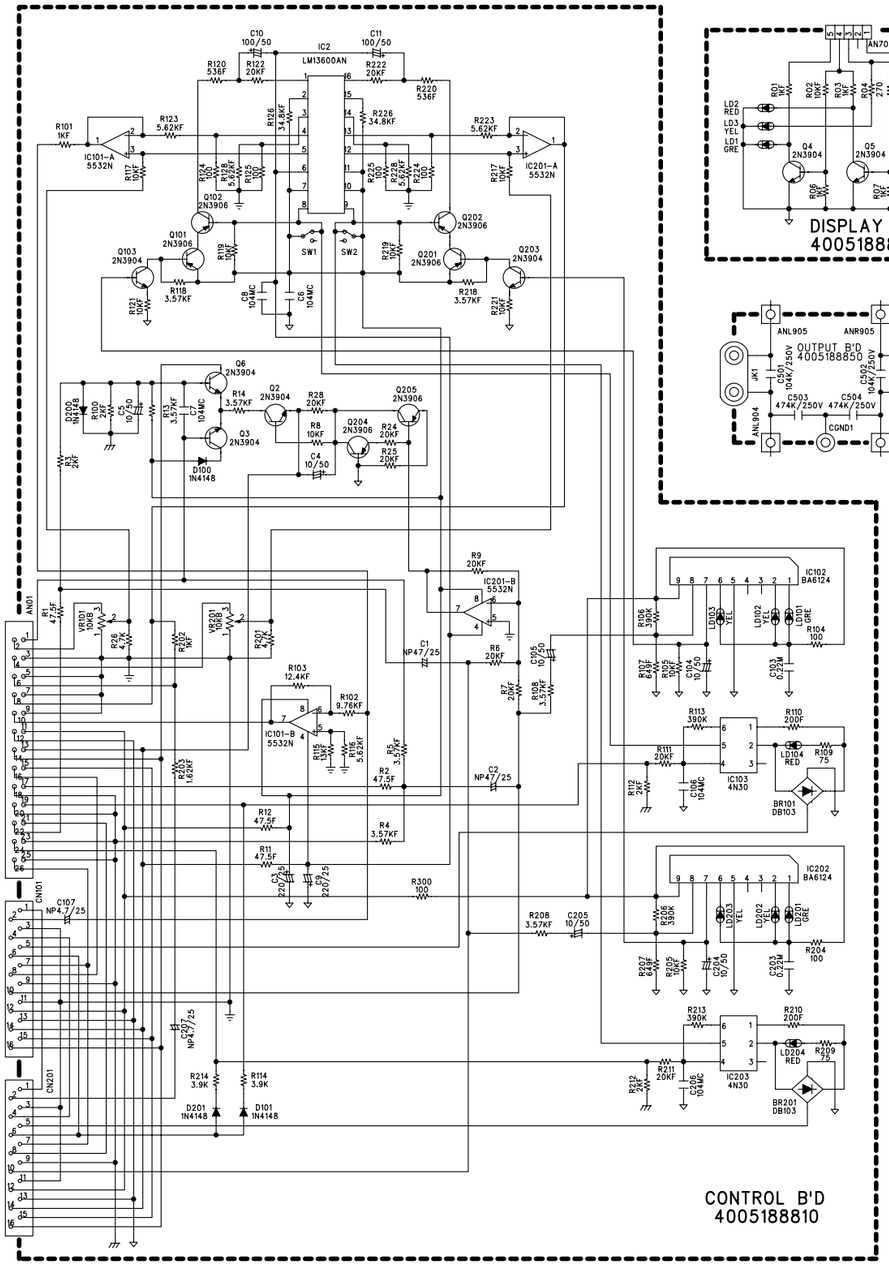

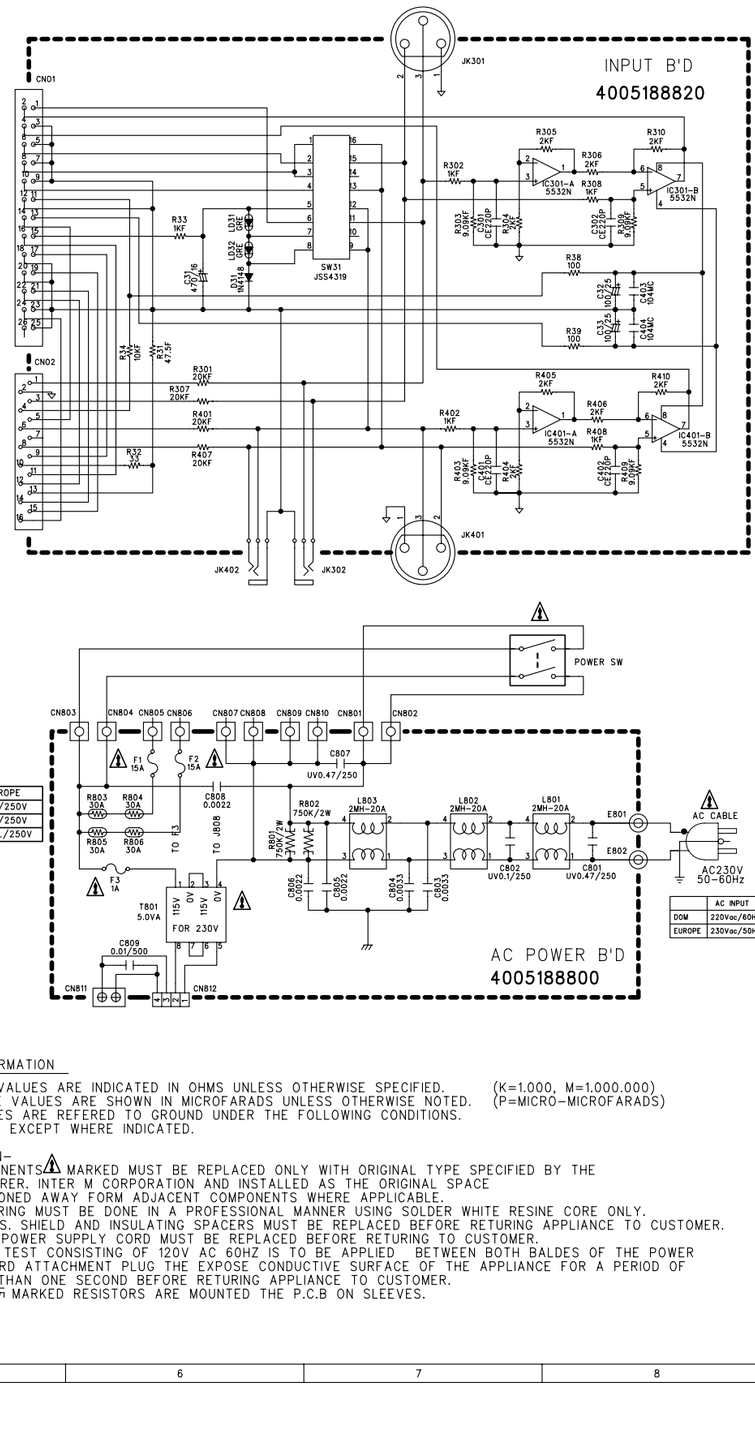

FUSE	DOMESTIC	EUROPE
F1	15A/250V	15A/250V
F2	15A/250V	15A/250V
F3	1A/250V	T1AL/250V

	AC INPUT
DOM	220Vac/60Hz
EUROPE	230Vac/50Hz

*SERVICE INFORMATION

1.RESISTANCE VALUES ARE INDICATED IN OHMS UNLESS OTHERWISE SPECIFIED. (K=1.000, M=1.000.000)
2.CAPACITANCE VALUES ARE SHOWN IN MICROFARADS UNLESS OTHERWISE NOTED. (P=MICRO-MICROFARADS)
3.ALL VOLTAGES ARE REFERED TO GROUND UNDER THE FOLLOWING CONDITIONS.
 DC:NO SIGNAL EXCEPT WHERE INDICATED.
 AC:RMS
4.-PRECAUTION-
 A)ALL COMPONENTS ⚠ MARKED MUST BE REPLACED ONLY WITH ORIGINAL TYPE SPECIFIED BY THE MANUFACTURER. INTER M CORPORATION AND INSTALLED AS THE ORIGINAL SPACE AND POSITIONED AWAY FORM ADJACENT COMPONENTS WHERE APPLICABLE.
 B)ALL SOLDERING MUST BE DONE IN A PROFESSIONAL MANNER USING SOLDER WHITE RESINE CORE ONLY.
 C)ALL COVERS. SHIELD AND INSULATING SPACERS MUST BE REPLACED BEFORE RETURING APPLIANCE TO CUSTOMER.
 D)A DAMAGE POWER SUPPLY CORD MUST BE REPLACED BEFORE RETURING TO CUSTOMER.
 E)DIELECTRIC TEST CONSISTING OF 120V AC 60HZ IS TO BE APPLIED BETWEEN BOTH BALDES OF THE POWER SUPPLY CORD ATTACHMENT PLUG THE EXPOSE CONDUCTIVE SURFACE OF THE APPLIANCE FOR A PERIOD OF NOT LESS THAN ONE SECOND BEFORE RETURING APPLIANCE TO CUSTOMER.
 F)THE ⏦ MARKED RESISTORS ARE MOUNTED THE P.C.B ON SLEEVES.