ROULETTE 1200 LD NE

Instruction Manual

model:

PF 3076 ROULETTE 1200 LD NE

ATTENTION

This instruction manual contains important information about the installation and use of the projector. Please read and follow these instruction carefully.

ATTENTION

Always ensure that the power to the projector is disconnected before opening the projector or commencing any maintenance work.

F.A.L. S.R.L. VIA SVIZZERA 12/14 – 46042 CASTEL GOFFREDO (MN) ITALY
http://www.fal.it fal@fal.it

INDEX

01 – SAFE USAGE OF THE PROJECTOR 3
02 – INSTALLING THE PROJECTOR 3
03 – FITTING THE LAMP 4
04 – THE MIRROR HEAD 4
05 – POWER SUPPLY – MAINS 5
06 – CONTROL CONNECTIONS 6
07 – PROJECTOR ADDRESSES 7
08 – OPTIONS 7
09 – DMX CHANNEL FUNCTIONS 12
10 – FOCUS 14
11 – LUBRICATION 14
12 – MAINTENANCE 14
13 – KEEPING THE PROJECTOR CLEAN 14
14 – TROUBLESHOOTING 14
15 – CHANGING THE GOBOS 15
16 – ELECTRICAL DIAGRAM 16
17 – TECHNICAL DATA 18

Please note that as part of F.A.L.'s ongoing commitment to continuous product development, specifications are subject to change without notice. Whilst every care is taken in the preparation of this manual F.A.L. reserves the right to change specifications in the course of product improvement. The publishers cannot be held responsible for the accuracy of the information herein, or any consequence arising from them.

01 – SAFE USAGE OF THE PROJECTOR

- Do not attempt to dismantle and modify the projector.
- Do not allow contact with water or any other fluids, or metallic objects (IP 20).
- Do not install the projector in areas of high humidity.
- Not allowed to be mounted directly on inflammable surfaces.
- Keep at least 0.5m distance between the projector and adjacent inflammable surfaces.
- The lighting apparatus must be used only with its protective shield.
- Protective grill, lenses, U.V. filters should be replaced if they are visibly damaged to the point at which their effectiveness is diminished, for example by becoming cracked or deeply scratched.
- The lamp must be replaced if it becomes damaged or deformed by heat.
- 5 m Keep at least 5m between the lamp and the illuminated surfaces.
- Avoid direct exposure to the light from the lamp. The light is harmful to the eye.
- Note:- The lamp reaches very high temperatures, allow at least 10 minutes for the lamp to cool completely before attempting to handle it.
- To ensure the reliability of the projector, it is recommended that the fans should be cleaned every 15 days. The lens, reflector and dichroic colour filters should also be regularly cleaned to maintain an optimum light output.

02 – INSTALLING THE PROJECTOR

The projector Roulette1200 LD NE should be mounted via its bracket (1) using 2 x M10 size screws. Always ensure that the structure to which you are attaching the projector is secure and is able to support a weight of 39Kg for each projector. The projector bracket allows an angle adjustment of +/- 50° and, once positioned, the knob (2) should be firmly tightened. For safety the projector should have a secondary fixing with a safety chain attached securely to the appropriate point on the unit.

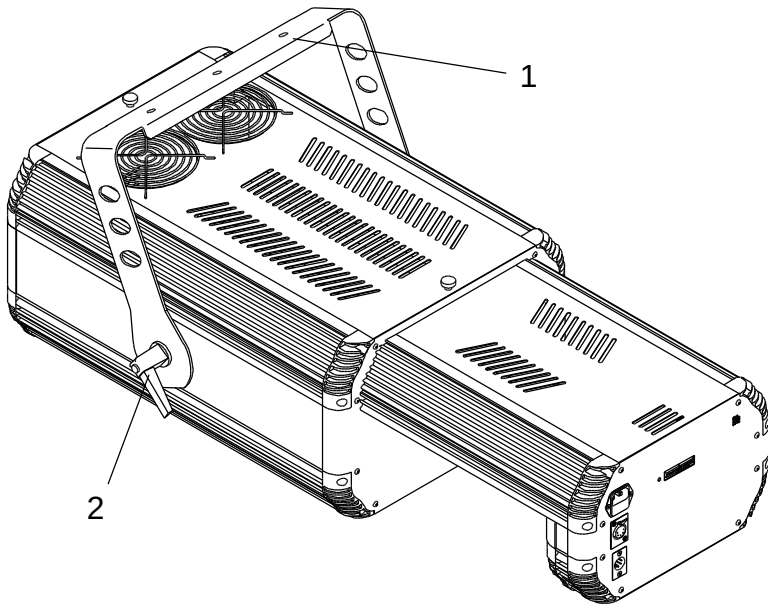

03 – FITTING THE LAMP

The lamp access hatch is released by turning fastening screws (4) a quarter turn anticlockwise, the hatch may then be lifted upwards to open. Insert the HMI 1200 GS DE lamp, taking care not to touch the glass part of the lamp. If the glass is accidentally touched, follow the manufacturers instructions for cleaning the lamp before you use it, otherwise the lamp life may be significantly reduced. Once the lamp has been inserted make sure the glass pip (P) on the bulb is facing upwards as shown in fig. A bellow; this ensures uniform light distribution, then tighten the two knurled nuts on the lamp. Close and fasten the lamp access hatch.
The HMI 1200 GS DE is a high pressure lamp with external igniter. Care should always be taken when handling these lamps. Always read the manufacturers "Instructions for use" enclosed with the lamp.

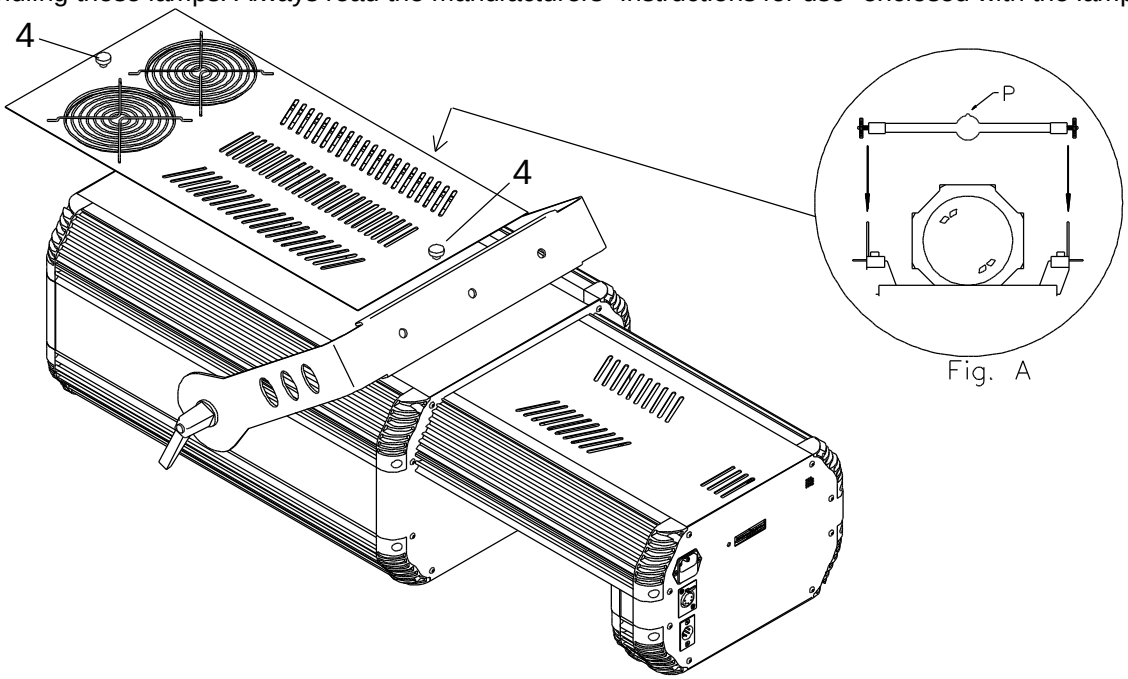

Fig. A

04 – THE MIRROR HEAD

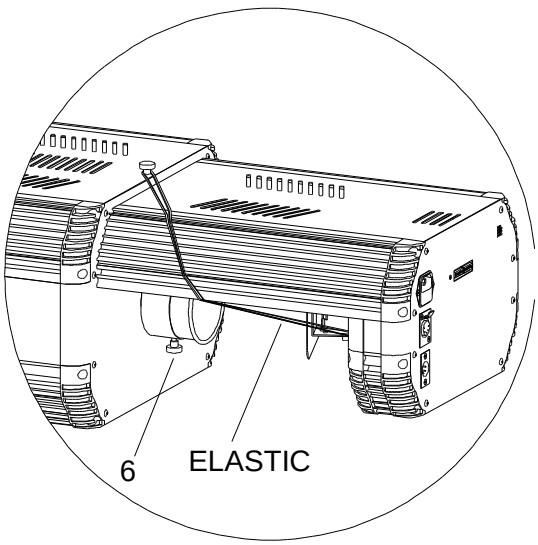

Remove the elastic band from the mirror assembly before switching on.

05 – POWER SUPPLY – MAINS

Use the plug provided to connect the mains power to the projector paying attention to the voltage and frequency marked on the back panel of the projector. It is recommended that each projector is supplied separately so that they may be individually switched on and off.

L = Brown

E = Yellow / Green

N = Blue

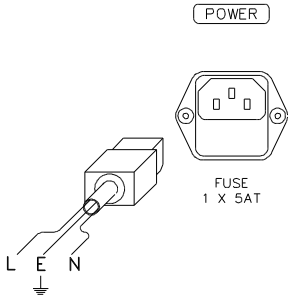

CHOOSING THE SUPPLY

It is possible to select the mains voltage and frequency with a terminal block located inside the projector. It splits into two sections: one labelled “BALL.” refers to the ballast and the other labelled “TRAN.” is relative to the transformer (see the electrical diagram).

The mains brown cable is connected to the screw clamp labelled “COM”. Connect this one with the two screw clamps indicating the correct values of voltage and frequency via a short wire.

For example, suppose that the mains voltage is 240V and the frequency is 50Hz. The connections on the terminal block should be as follows, in the right figure.

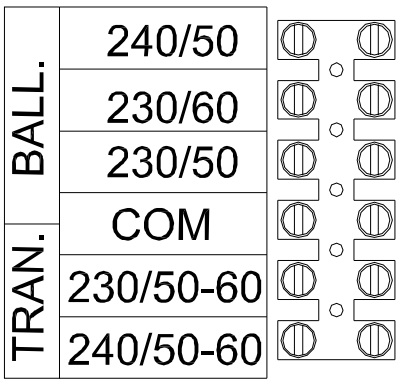

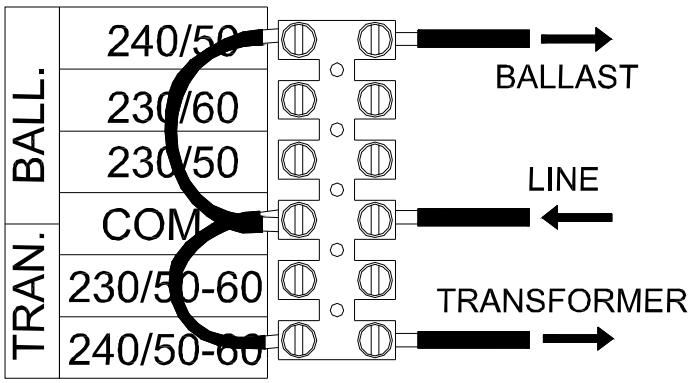

IMPORTANT

It is essential that each projector is correctly earthed and that electrical installation conforms to all relevant standards. Power consumption of the Roulette1200 LD NE is 1900 VA.

WATCHDOG SYSTEM

When the projector is switched on the electronics perform a reset, this function moves the head to an extreme limit point and rotates the internal colour and gobo wheels thus allowing the microprocessor control system to register the positions of all motors under its control. When the lamp strikes and “fires up” it can create a certain amount of electrical noise within the projector that has the potential to disturb the microprocessor. The Roulette 1200 LD NE is fitted with an electronic watchdog system that monitors the microprocessor and will initiate a reset if the functioning of the microprocessor has been disturbed. This system ensures that the reset is performed successfully and that once completed the projector is ready to receive control instructions and operate without problem.

06 – CONTROL CONNECTIONS

The projector can accept digital control signals in DMX 512 (1990) format. Connection between controller and projector and between one projector and another must be made with 2 core screened cable, with each core having at least a 0.5mm^2 cross section. Connection to and from the projector is via cannon 5 pin XLR, plugs and sockets (which are included with the projector). Note, care should be taken to ensure that none of the connections touch the body of the plug or each other. The body of the plug is not connected in any way. Connect the control signal to the socket on the front panel marked DIGITAL IN and then from the socket marked DIGITAL THRU to the DIGITAL IN socket of the next projector.
When a DMX 512 signal is received the led located near the display will be on, when not receiving a DMX signal the led will be off and if the led blinks, it means that the DMX signal is not correct.

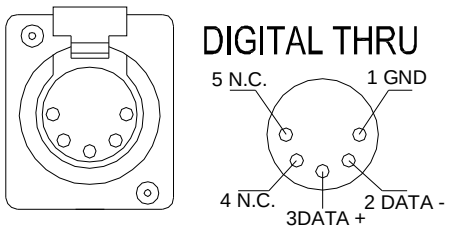

DMX512 CONTROL

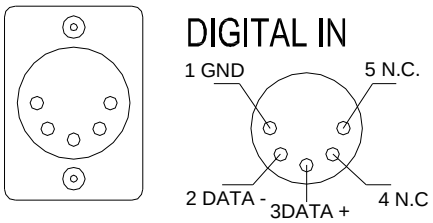

DMX 512 SIGNAL	
PIN	FUNCTION
1	GND
2	DATA -
3	DATA +
4	N.C.
5	N.C.

DMX TERMINATION

For all installations having long signal cables or in the presence of electrical noise, for example a discotheque, it is recommended practice to use a DMX terminator: this assists in preventing corruption of the digital control signal by external noise. The DMX terminator is simply an XLR connector with a 120Ω (Ohm) resistor connected across pins 2 and 3, which is then plugged into the DIGITAL THRU socket on the last projector in the chain. The connections are illustrated below.

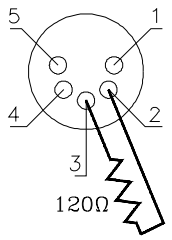

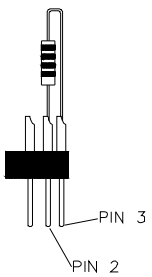

DMX TERMINATOR CONNECTOR

Connect a 120Ω resistor across pins 2 and in an XLR plug and insert into the DIGITAL THRU socket on the last unit in the chain.

07 – PROJECTOR ADDRESSES

The Roulette 1200 LD NE uses 9 digital control channels (11 in High Resolution mode). Each projector must be given a digital start address number so that the correct projector responds to the correct control signals. This digital start address is the channel number from which the projector starts to “listen” to the digital control information being sent out from the controller. This digital encoding must be done on each projector.
Push once the button marked MENU/ESC on the front panel and the display will show the word CHAN. Use the “+” and “-“ buttons to select the desired start address in the display. For example, projector 1 address 1, projector 2 address 12, projector 3 address 23, etc. Confirm your settings by pressing the button marked ENTER.

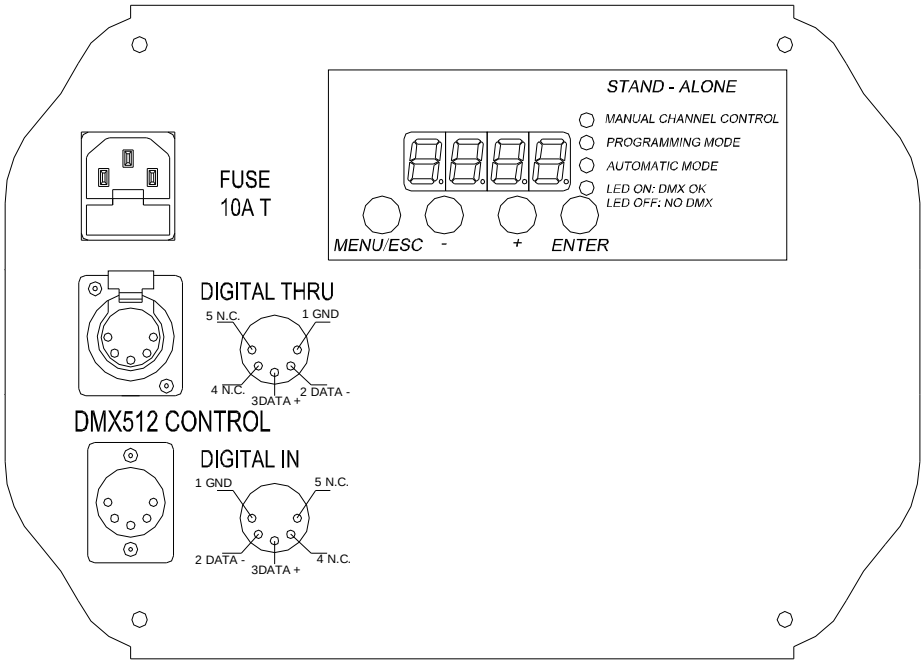

08 – OPTIONS

The Roulete 1200 LD NE gives the possibility to choose 16 options. These options can be activated by pressing the MENU/ESC button. The display will show the name of the options (which is indicated on the front panel under the display) starting from option1, the DMX start address. The “+” and “-“ buttons will scroll the list of options. Press the ENTER button to enter the sub-menu of the desired option; here you can set other parameters of the projector or simply you are asked to activate or deactivate the option. With the “+” and “-“ buttons you can choose between YES or NO, press ENTER to confirm your choice.

Option 1 – **DMX ADDRESS**

When the display shows CHAN press ENTER. Press the “+” and “-“ buttons as many times as needed to display the desired channel number. For fast advancing keep and hold the button. Press ENTER and choose the word YES with “+” or “-“ to confirm the setting.

Option 2 – **FIXED COLOUR POSITION**

When the display shows FCOL press ENTER. Select with the “+” and “-“ buttons the word YES and confirm your selection with ENTER: option 2 is then activated and the colour wheel will only stop at full colour positions and can not be made to stop between colours for a split colour effect.

Option 3 – **FIXED BI-COLOUR POSITION**

When the display shows bCOL press ENTER. Select with the “+” and “-“ buttons the word YES and confirm your selection with ENTER: option 3 is then activated and the colour wheel will only stop on full or half colour positions; it will not stop at intermediate positions. For continuously variable colour, option 2 and 3 must be set to NO .

Option 4 – **SHUTTER ON GOBO**

When the display shows SH-G press ENTER. Select with the "+" and "-" buttons the word YES and confirm your selection with ENTER: option 4 is then activated and the shutter will close each time the gobos are changed and open only when the new gobo is reached. With the setting NO , the beam is not blacked out and remains visible as the gobo wheel rotates to its new position.

Option 5 – **SHUTTER ON COLOUR**

When the display shows SH-C press ENTER. Select with the "+" and "-" buttons the word YES and confirm your selection with ENTER: option 5 is then activated and the shutter will close each time the colours are changed and open only when the new colour is reached. With the setting NO , the beam is not blacked out and remains visible as the colour wheel rotates to its new position.

Option 6 – **REVERSE PAN**

When the display shows rPAN press ENTER. Select with the "+" and "-" buttons the word YES and confirm your selection with ENTER: option 6 is then activated, which allows the PAN movement to be inverted so that the head moves from right to left instead of left to right, for example. The start position is inverted, too.

Option 7 – **REVERSE TILT**

When the display shows rt IL press ENTER. Select with the "+" and "-" buttons the word YES and confirm your selection with ENTER: option 7 is then activated, which works on the same principal as the Reverse PAN: the mirror TILT movement will be inverted.

Option 8 – **HIGH RESOLUTION**

When the display shows HrES press ENTER. Select with the "+" and "-" buttons the word YES and confirm your selection with ENTER: option 8 is then activated, which allows a fine position control. The Roulette 1200 LD NE now require 11 control channels: two extra channels are now PAN Fine (channel 10) and TILT Fine (channel 11).

Option 9 – **PROJECTOR MASTER**

When the display shows MASt press ENTER. The display will show a sub-menu where you can choose the master functioning of the projector. Move inside this sub-menu with "+" and "-" buttons:

- AUtO, automatic mode; the master unit executes his own sequence and sends to the DMX bus the control values for the slaves (up to three). These slaves then do the steps as stored in the master memory. Press ENTER, now you have 3 options, use the "+" and "-" buttons to scroll:
  - SLOU. Press ENTER to activate a slow automatic sequence; the AUTOMATIC MODE LED near the display will lit and the display will show the words: AUtO – SLOU – rUN. Press the MENU/ESC button to stop the execution and get back, the LED turns off.
  - FASt. Press ENTER to start a fast automatic sequence; the AUTOMATIC MODE LED near the display will lit and the display will show the words: AUtO – FASt – rUN. Press the MENU/ESC button to stop the execution and get back, the LED turns off.
  - USEr. Press ENTER to activate the user sequence stored with option 12. The AUTOMATIC MODE LED will lit and the display will show AUtO – USEr – rUN. Press MENU/ESC to return.
- MUS I, automatic music mode *(NOT ACTIVE AT THE MOMENT)*
- L IN I, *(NOT ACTIVE AT THE MOMENT)*
- SYNC, *(NOT ACTIVE AT THE MOMENT)*

Option 10 – **PROJECTOR SLAVE**

When the display shows SLAU press ENTER. The display will show a sub-menu where you can choose the number of the slave projector (from 1 to 3). Automatically, the master projector addresses correctly each slave. Move inside this sub-menu with "+" and "-" buttons:

- SL-1, projector slave #1. Press ENTER, select with the "+" and "-" buttons the word YES and confirm your selection with ENTER. The projector is now the slave 1.
- SL-2, projector slave #2. Press ENTER, select with the "+" and "-" buttons the word YES and confirm your selection with ENTER. The projector is now the slave 2.
- SL-3, projector slave #3. Press ENTER, select with the "+" and "-" buttons the word YES and confirm your selection with ENTER. The projector is now the slave 3.
- AUTO, automatic mode: the slave is still controlled by the master, but the sequence it executes is stored in his own memory; the slave unit will wait for a synchronisation signal from the master unit before advancing a step. Press ENTER, now you have 4 options, use the "+" and "-" buttons to scroll:
  - SLOU. Press ENTER to activate a slow automatic sequence; the AUTOMATIC MODE LED near the display will lit. Press the MENU/ESC button to stop the execution and get back, the LED turns off.
  - FAST. Press ENTER to start a fast automatic sequence; the AUTOMATIC MODE LED near the display will lit. Press the MENU/ESC button to stop the execution and get back, the LED turns off.
  - USER. Press ENTER to activate the user sequence stored with option 12. The AUTOMATIC MODE LED will lit. Press MENU/ESC to return.
  - TYPE, this option sets the synchronisation between master and slaves.
    The slave units can synchronise in 2 different ways with the master unit. You can choose to have all units synchronised on the same step, so for example if the master is on step 1, the slaves will all also be on step 1 of whichever sequence they were set to. When the master is on step 2, the slaves will also be on step 2, and so on. Or alternatively, you can choose to have only the changing of a step to another synchronised, which means that it does not matter which step any unit is on: when the master advances a step, the slaves will also advance a step, but they need not all be on the same step number of whichever sequence they were set to. The synchronisation is achieved very simply, the master unit transmits a DMX signal on DMX channels 1 and 2.
    The signal on channel 1 is usually at 0 (zero), when the master unit advances a step in the selected auto sequence, it sends a DMX level of 255 on channel 1 for a period of 500 milliseconds. When the slave unit(s) receive this, they will advance 1 step of their selected auto sequence. They may or may not be on the same step number of the sequence as the master but they will advance a step together with the master.
    The DMX signal on channel 2 is slightly different. The master sends a DMX level on channel 2 which corresponds to the number of the step in the sequence. So if the master is on step 10 of the sequence, for example, it will be sending DMX level 10 on channel 2. The slave units set to listen to this channel will replay the step corresponding to the received DMX level. In this way the slave always knows which step the master is on and in the example will replay step 10 of the sequence.

    When the display shows TYPE press ENTER and use "+" and "-" buttons to display CH 1 or CH2; press ENTER to choose the desired synchronisation option.

Option 11 – **FIXED VALUES**

With this option you can set manually the DMX values for each channel in the projector and save them. Automatically, if you turn off the projector in the FVAL menu, these values will be reloaded when you turn on the projector again. If you exit the menu, the control returns to the DMX bus.

When the display shows FUAL press ENTER. The MANUAL CHANNEL CONTROL LED will turn on, indicating that you are modifying the DMX values manually. The display will show a sub-menu where you can choose the DMX channel to be manually controlled. Scroll the list with "+" or "-":

- CH 1, CH 2,…, channel to be modified. Press ENTER on the desired channel. The display will show d 0. Use "+" or "-" to set the DMX values. For fast advancing keep and

hold the button. Press ENTER to confirm and return; repeat the previous steps for the other channels.

- SAVE, you have to save your settings to activate and reload them. If you press MENU/ESC in the FVAL menu without saving, all your settings will be lost. To save the channels settings choose SAVE, press ENTER, "+" or "-" to display YES and ENTER to confirm.

Option 12 – **USER PROGRAMMING** *(NOT AVAILABLE AT THE PRESENT REVISION)*

When the display shows USER press ENTER. The display will show a sub-menu where you can edit the scenes and then save them inside the projector memory.

Option 13 – **BRIGHTNESS DISPLAY**

When the display shows bRIG press ENTER. The display will show a sub-menu where you can choose the display brightness (0, 1, …,). Select the number with "+" or "-" and confirm with ENTER.

Option 14 – **REVERSE DISPLAY**

When the display shows rdSP press ENTER. Select with the "+" and "-" buttons the word YES and confirm your selection with ENTER: option 14 is then activated, which inverts the visualization of the numerical display, particularly useful for floor standing use.

Option 15 – **LAMP TIMER**

When the display shows LAMP press ENTER to show the lamp operating life in hours. To reset the counter press ENTER again, the display will show CANC. Use "+" or "-" to select YES and press ENTER to clear the counter.
The lamp time meter is also cleared every time you restore the factory settings on the projector (see option 16).

Option 16 **– DIAGNOSTIC**

When the display shows dIAG press ENTER. You can move with "+" or "-" in the sub-menu.

- rESE, reset. Press ENTER, select YES with "+" or "-" and press ENTER to confirm: the projector performs a reset.
- FACt, factory settings. Press ENTER, select YES with "+" or "-" and press ENTER to confirm: all the options settings will be cleared to the original settings. The display will show UAIt – FAL and then exits this option.
- dEMO, the projector executes a demo sequence to verify that all the functions are currently running. Press ENTER, the projector starts the demo, the AUTOMATIC MODE LED will lit, the display will show dEMO – RUN. Press MENU/ESC to exit.
- CALb, calibrate the motors, useful during the unit setup. Press ENTER, select YES with "+" or "-" and press ENTER to confirm. The Pan and Tilt motors go to their zero position. To exit the calibration, choose NO in the CALb menu and press ENTER.
- UPGR, software upgrade. You can connect the projector to the serial port of a PC via a DMX adapter and upgrade the software of the unit. Press ENTER, select YES with "+" or "-" and confirm with ENTER. The display will show REC; the PC tells you when finished. Now you have to restart the projector.
- tESt, projector test. Press ENTER, the projector starts a test sequence, the AUTOMATIC MODE LED will lit and the display will show tESt – RUN. Press MENU/ESC to exit.
- OFFS, this option allows to regulate the zero cross of Pan and Tilt motors, so as to eliminate movement irregularities. Press ENTER, using "+" or "-" choose PAN or tILt in the menu and press ENTER. In the next menu you can select a value in the range from 4 to - with "+" or "-". Press ENTER to confirm.
- VERS, check the version of the electronic boards. Press ENTER, the display will show a sub-menu and you can scroll with "+" or"-":
  - MAIN, press ENTER to see the projector main board number.

- tAbL, press ENTER to see the specific projector control board number.
- SEQU, press ENTER to see the stored sequence identification number.
- nOdU, *NOT AVAILABLE*.

OPTIONS MENU OVERVIEW

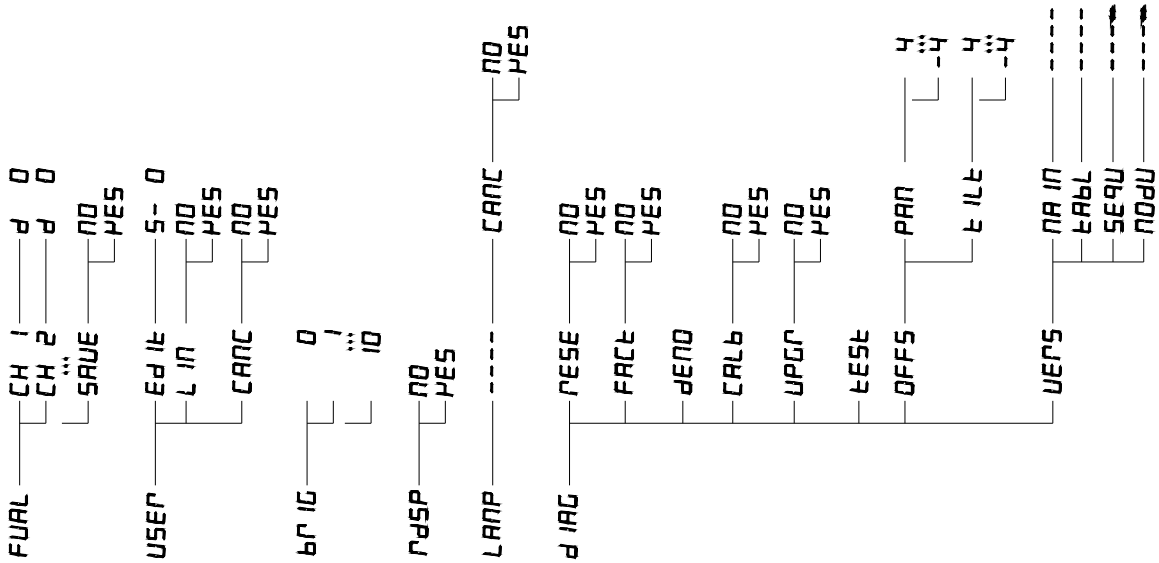

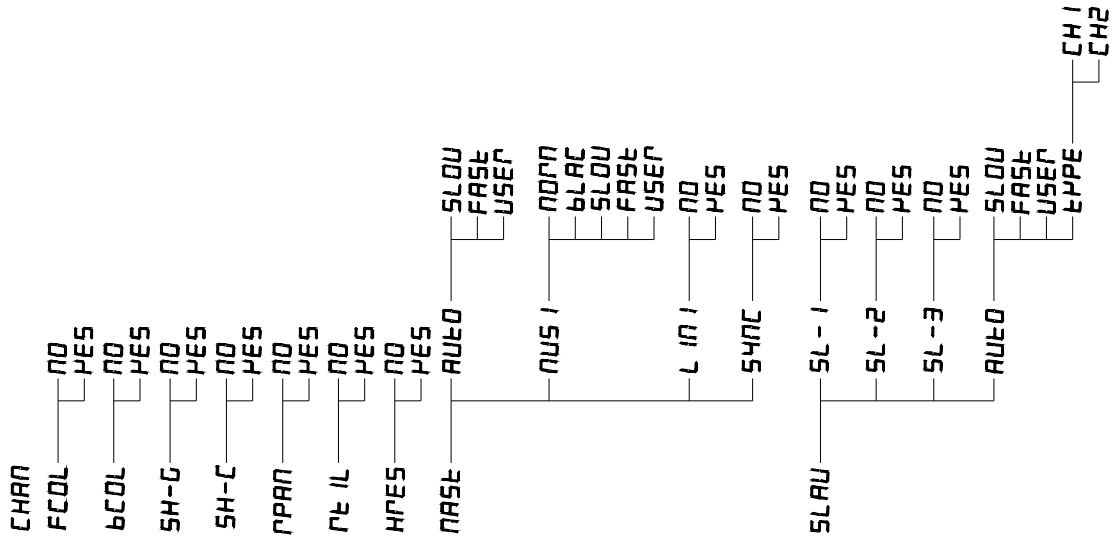

09 – DMX CHANNEL FUNCTIONS

Channel	Function
1	Colours
2	Rotating Gobo Wheel
3	Gobo Rotation
4	Shutter and Fixed Gobo Wheel
5	Pan
6	Tilt
7	Prism
8	Frost
9	NOT USED
10	Pan fine
11	Tilt fine

CHANNEL 1 – COLOUR WHEEL

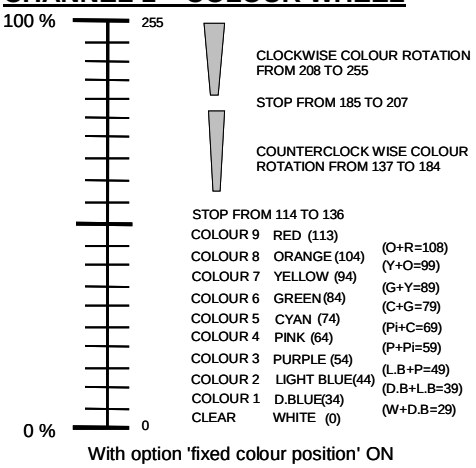

Control values for **Colour Wheel**, in DMX units.

CHANNEL 2 – ROTATING GOBO WHEEL

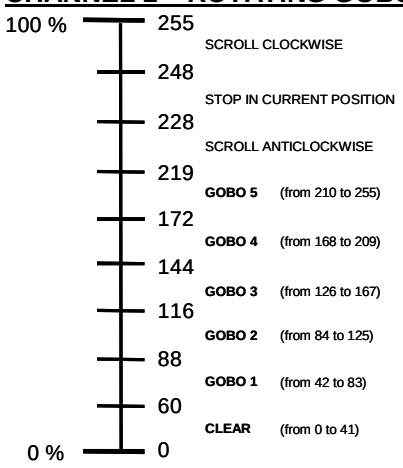

Control values for **Rotating Gobo Wheel**, in DMX units.

REMOTED REQUESTED RESET – SOFT RESET

If the DMX value sent on channel 1 stays in the range from 4 to 6 DMX unit for more than 6 seconds, the projector will start a reset sequence (Remote Requested Reset). The electronics are re-started and all motors moved to their home positions exactly as they do when the power is first switched on, but the lamp is not switched off in this sequence, although the beam will be blacked out.

CHANNEL 3 – GOBO ROTATION

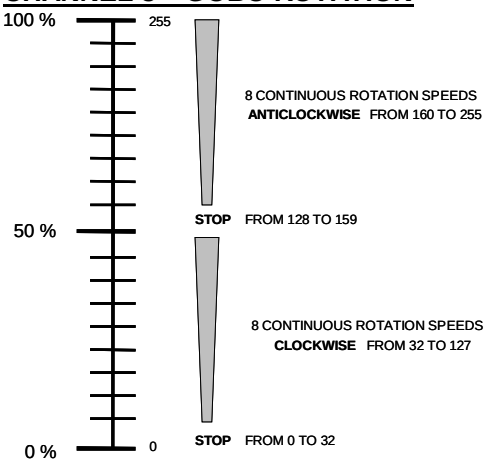

Control values for **Gobo Rotation**, in DMX units.

CHANNEL 4 – SHUTTER/FIXED GOBO WHEEL

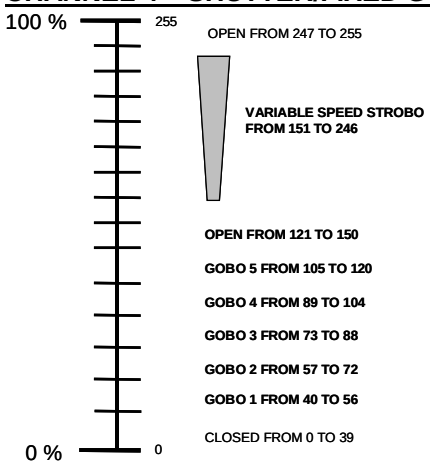

Control values for **Shutter / Fixed Gobo Wheel**, in DMX units.

CHANNEL 5 – PAN

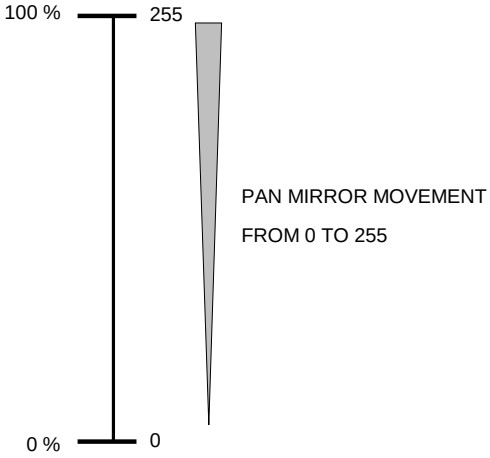

Control values for mirror **Pan**,
in DMX units.

CHANNEL 6 – TILT

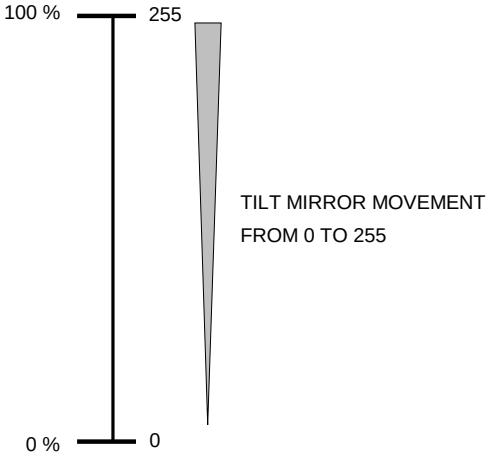

Control values for mirror **Tilt**,
in DMX units.

CHANNEL 7 – PRISM

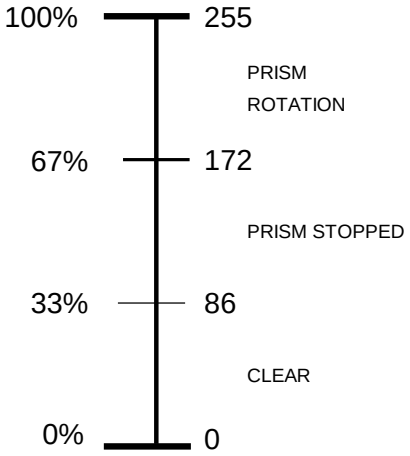

Control values for **Prism**,
in DMX units.

CHANNEL 8 – CTC

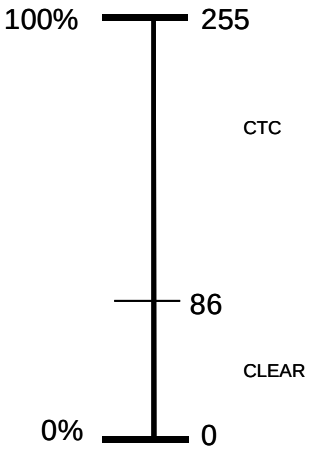

Control values for the **CTC**,
in DMX units.

CHANNEL 10 – PAN FINE

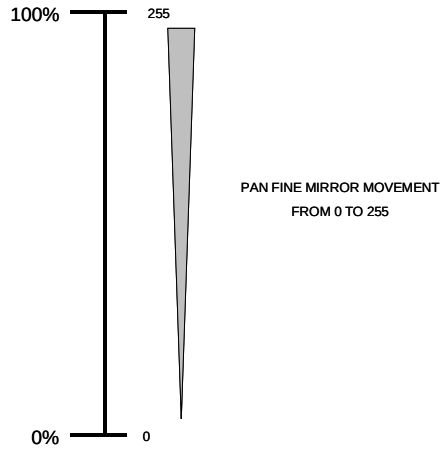

Control values for the **Pan Fine**,
in DMX units.

CHANNEL 11 – TILT FINE

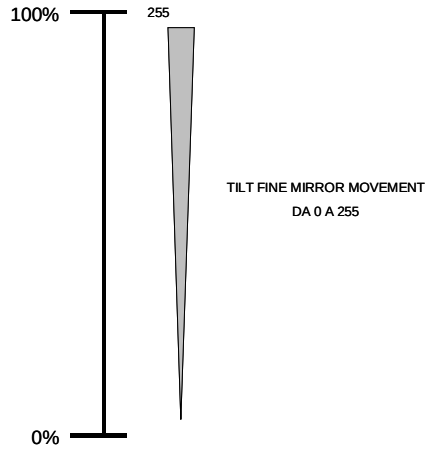

Control values for the **Tilt Fine**,
in DMX units.

10 – FOCUS

By loosening the knurled knob under the lens tube (6) it is possible to move the lens for focusing the projector. You may find the following helpful. Switch on the projector and send the following values from your controller. You can use the same values but with channel 2 (gobos) set to 0, to align the lamp as mentioned earlier in this manual.

CHANNEL 1 - Colour - 0 - white
CHANNEL 2 - Gobo wheel between 12.9%-25.5% - DMX 33 and 65 - gobo 1
CHANNEL 3 - Gobo rotation - 0 - stopped
CHANNEL 4 - Shutter - 100% - DMX 255 - full open
CHANNEL 5 - Pan 50% - DMX 128 - centre
CHANNEL 6 - Tilt 50% - DMX 128 - centre
CHANNEL 7 - Prism - 0 - clear
CHANNEL 8 - Frost - 0

Having loosened the knurled knob (6) move the lens in or out to obtain the focused image, then firmly tighten the knurled knob.

11 – LUBRICATION

To ensure the continued smooth rotation of the rotating gobos it is recommended that the wheel is lubricated periodically, preferably every two months. Use only high working temperature low viscosity oil, a syringe with a fine needle is the easiest way to introduce the oil to the bearings around each gobo. Do not over lubricate as this will cause spillage when the wheel rotates.

12 – MAINTENANCE

If the projectors lens becomes damaged or broken it should be replaced.
If the lamp becomes damaged or deformed in any way it must be replaced.
If the light from the lamp appears dim this would normally indicate that it is reaching the end of its life and it should be changed at once, old lamps run to the extremity of their life can explode.
If the projector does not function, check the fuse on the power socket of the projector, it should only be replaced by fuse of the same value as that marked on the panel beside the fuse holder.
The Roulette 1200 LD NE also has a thermal protection device that will switch off the projector in case of overheating, should this operate, check that the fans are not blocked, and if they are dirty clean them before switching on the projector again.
Check that the fans are operational, if not call a qualified technician.

13 – KEEPING THE PROJECTOR CLEAN

To ensure the reliability of the projector it should be kept clean. It is recommended that the fans should be cleaned every 15 days. The lens, reflector mirror and dichroic colour filters should also be regularly cleaned to maintain an optimum light output. Do not use any type of solvent on the reflector mirror, dichroic colour filters or the plastic body of the projector.

14 – TROUBLESHOOTING

PROBLEM	POSSIBLE SOLUTION
The projector does not start	Check the fuses on the power socket.
The lamp comes on but the projector does not respond to the controller	Check the digital start address (section 07) and check the wiring of the control cable (section 06).
The projector only functions intermittently	Check the fan is working and not dirty.
The projected image appears to have a halo	Check the lamp is installed correctly (section 03).
The beam appears dim	The lamp may be at the end of its life and should be replaced. Check the optics are clean.
The rotating gobos loose steps (position)	Lubricate the gears on the rotating gobo wheel.

Any other maintenance should only be performed by a qualified person.

15 – CHANGING THE GOBOS

If you wish to change a gobo, open the projector by undoing the fastening screws (4).
Using a small screwdriver remove the gobo retaining spring. If you wish to use a glass gobo remove also the aluminium ring. Insert the gobo into position, the aluminium ring is used only for gobos with a thickness of less than 1 millimetre.

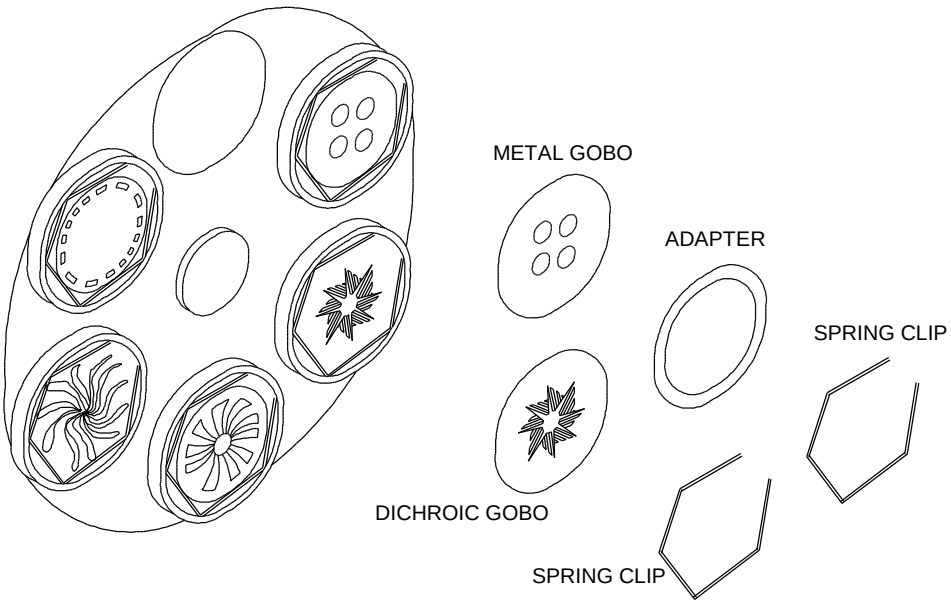

16 – ELECTRICAL DIAGRAM

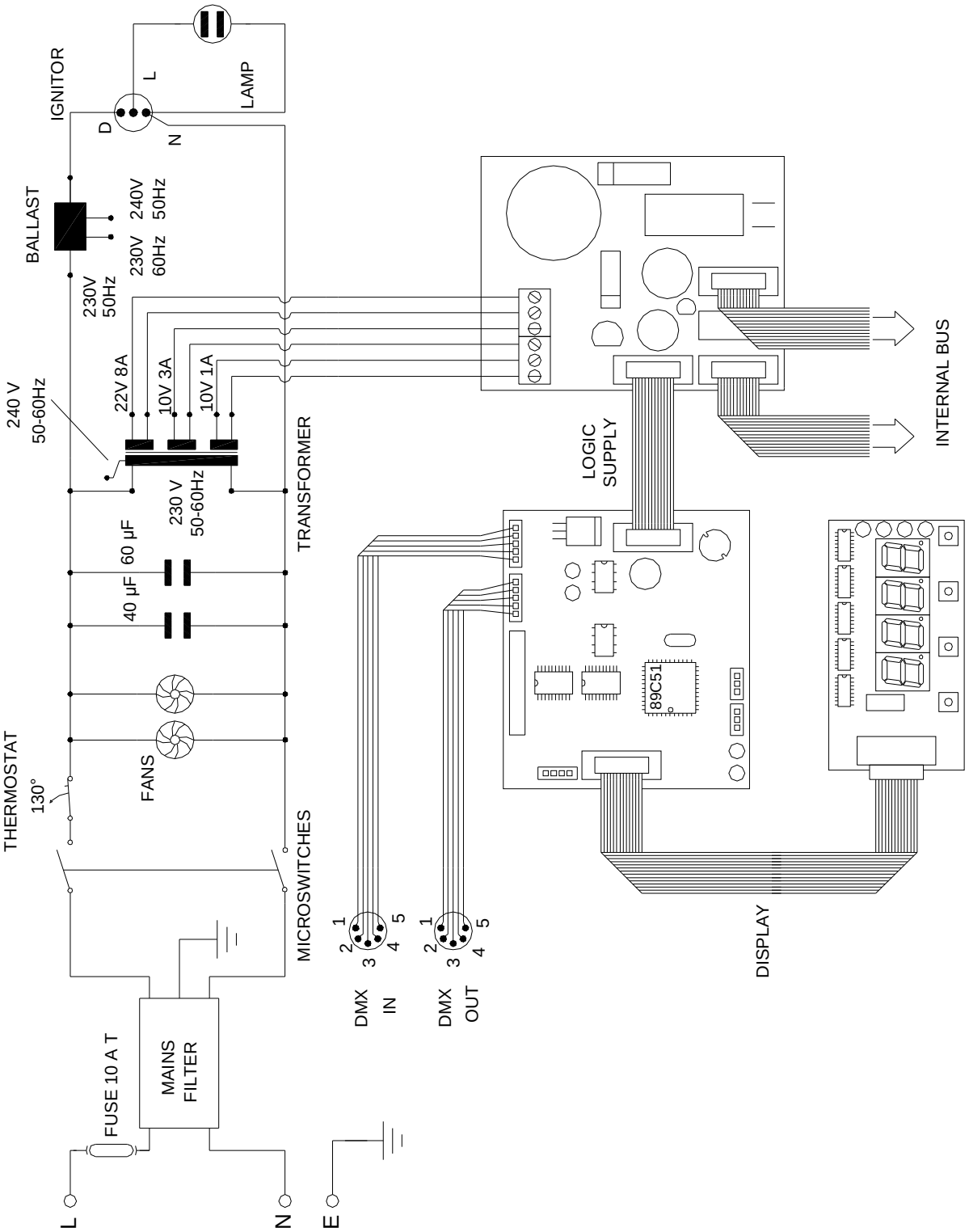

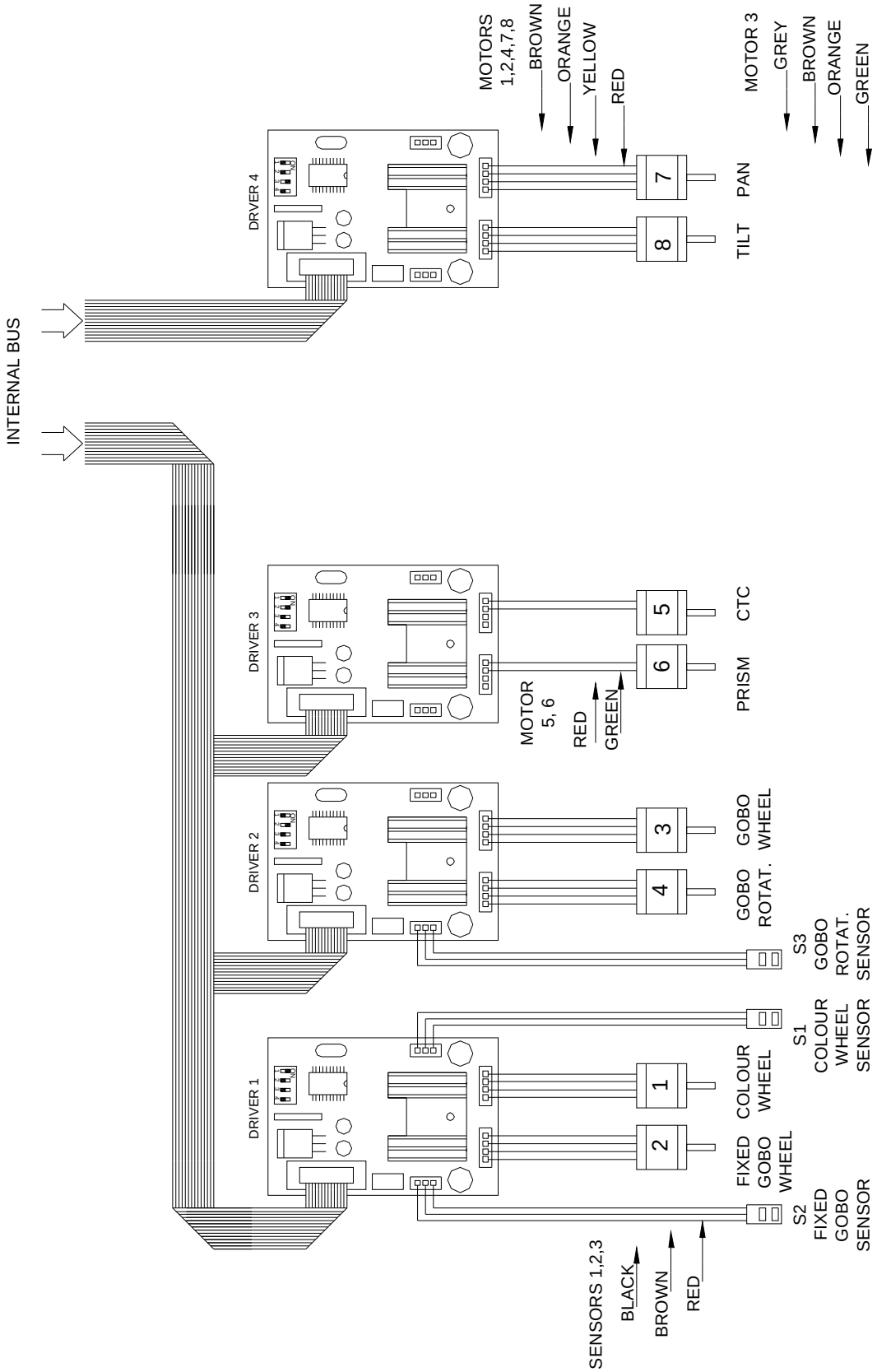
INTERNAL BUS
DRIVER 4
DRIVER 3
DRIVER 2
DRIVER 1
MOTORS 1,2,4,7,8
BROWN
ORANGE
YELLOW
RED
MOTOR 3
GREY
BROWN
ORANGE
GREEN
7
8
PAN
TILT
MOTOR 5, 6
RED
GREEN
5
6
CTC
PRISM
3
4
GOBO WHEEL
GOBO ROTAT.
S3 GOBO ROTAT. SENSOR
S1 COLOUR WHEEL SENSOR
1
2
COLOUR WHEEL
FIXED GOBO WHEEL
S2 FIXED GOBO SENSOR
SENSORS 1,2,3
BLACK
BROWN
RED

17 – TECHNICAL DATA

POWER SUPPLY: 230V 50Hz (or 60Hz to order).

POWER CONSUMPTION: 1900VA at 230V.

LAMP: HMI 1200 GS DE. (Osram)
Colour Temperature 6100 K,
Socket SFc 15.5 life 1000 hours (manufacturer ratings).

OPTICS: High efficiency optical system.

CTC: 1 Colour temperature conversion filter.

COLOURS: 9 dichroic filters with chromatic yield + white.
Variable speed continuous colour wheel bi-directional rotation to produce Rainbow effect.

ROTATING GOBOS: 5 indexable interchangeable rotating gobos + clear.

FIXED GOBO: 5 fixed gobos + white.

PRISM: 1 x 4 facet rotating prism.

STROBE, SHUTTER: Fast action shutter for beam blackout.
Strobe effect with strobe speed fully adjustable from 1 to 7 flashes per second.

MOTORS: 6 step motors + 2 DC motor controlled by internal microprocessor.

MOVEMENT: Pan movement through 180°.
Tilt movement through 110°.

CONTROL: Standard DMX 512 with digital display and 4 buttons.
9 control channels, 11 if used with High resolution PAN and TILT setting.
Automatic mode: this function allows groups of four units to operate with an internal sequence.
Sound activation: this function allows groups of four units to operate with a music activated internal sequence.

COOLING: Forced cooling via low noise axial fans.

HOUSING: Extruded aluminium.
Metal parts have epoxy powder paint finish.
Easy access to lamp and main components.
Protection IP20.

DIMENSIONS: 905mm L x 450mm W x 230mm H (380mm including bracket).
Weight 39kg.

REFERENCE NORM: CE

