ACTION 500 series

# ACTION-S18



## KEY FEATURES

- Passive subwoofer system
- Birch plywood enclosure
- Durable ISO-flex paint
- Recommended processor: DSP-226
- Recommended amplifier: PA series

## DESCRIPTION

ACTION-S18 is a passive direct radiation subwoofer system composed of a single 18FW speaker with a 3" coil and 20 mm winding depth, double layer and sandwich to boost system power, as well as a new forced convection circuit that works to reduce the effects of coil heating, improving the system's overall performance as a result.

As part of our company culture, all our systems are developed under a single philosophy: to deliver the highest possible quality in terms of both materials and overall system design. In the ACTION-500 series we use the same birch plywood as our touring systems for a tight, natural warm sound found nowhere else on the market.

For long-term optimal performance of the ACTION-500 passive versions, the system can only be a complete sound system when rounded out with our amplifiers and processors with stored presets and limiters.

## APPLICATIONS

- Live sound reinforcement
- Speech and vocals
- Music playback in entertainment
- A/V, and institutional venues

## SPECIFICATIONS

### Performance

| | |
|---|---|
| Frequency Range (-10 dB) | 33 Hz – 160 Hz |
| Nominal Impedance | 8 ohms |
| RMS Power Handling | 600 W |
| Peak Power Handling | 2400 W |
| On-axis Sensitivity 1W/1 m | 96 dB SPL |
| Maximum Peak SPL at 1 m | 133 dB |
| Recommended Amplifier | PA-900<br>PA-2700 |
| Recommended Processor | DSP-226 |

### Connectors

| | |
|---|---|
| Audio Input Connector | 1 x speakON NL4 |
| Audio Output Connector | 1 x speakON NL4 |

### Enclosure

| | |
|---|---|
| Enclosure Construction | Birch Plywood |
| Enclosure Geometry | Rectangular |
| Finish | ISO-flex Paint |
| Color | Black |
| Depth | 660 mm (26,0 in) |
| Dimensions ( H x W x D ) | 720 x 545 x 660 mm<br>28,3 x 21,5 x 26,0 in |
| Net Weight | 40,5 kg ( 89,1 lb ) |

### Components

| | |
|---|---|
| LF Driver | 18FW |

DAS Audio Group, S.L. - C/ Islas Baleares 24 - 46988 Fuente del Jarro - Valencia - Spain - Tel. +34961340860
Updated (DD/MM/YYYY): 01/03/2022

# ACTION-S18

## Shipping

| | |
|---|---|
| Carton Dimensions ( H x W x D ) | 795 x 595 x 690 mm<br>31,3 x 23,4 x 27,2 in |
| Shipping Weight | 42,7 kg ( 93,9 lb ) |

## ORDERING INFORMATION

| Model | Description | P/N |
|---|---|---|
| **System** | | |
| ACTION-S18 | | 10427255 |
| **Replacement Parts** | | |
| 18FW | Transducer | 20208981 |
| GM-18FW | Recone Kit | 20208531 |
| **Accessories** | | |
| ANL-2 | Rigging Accessories | 10101020 |
| FUN-VT18 | Transport Accessories | 10103740 |
| SPK4-1 | Electronic Accessories | 20502000 |
| SPK4-10 | Electronic Accessories | 20502001 |
| TRD-6 | Installation & Stacking Acc. | 10104470 |
| TRD-7 | Installation & Stacking Acc. | 10104471 |

## DIMENSIONS

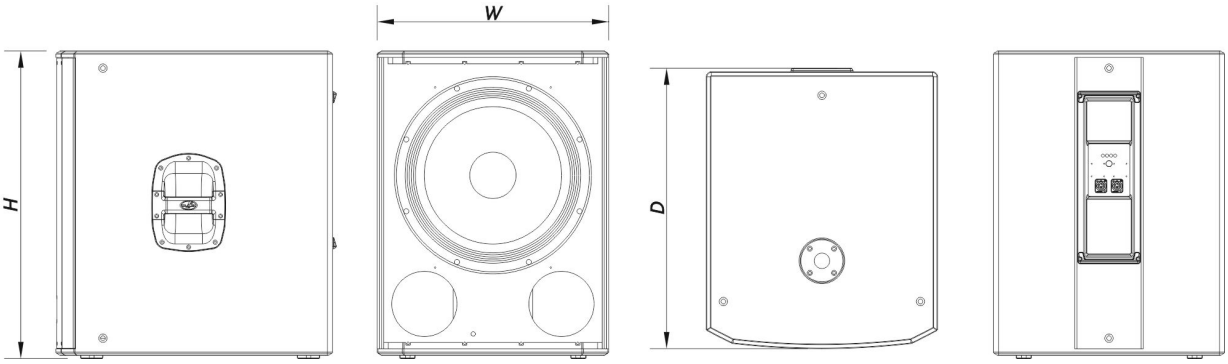


DAS Audio Group, S.L. - C/ Islas Baleares 24 - 46988 Fuente del Jarro - Valencia - Spain - Tel. +34961340860
Updated (DD/MM/YYYY): 01/03/2022